SHOP FACILITY

GRANT COUNTY
PUBLIC WORKS DEPARTMENT
ROAD DISTRICT NO. 3
QUINCY, WASHINGTON

BOARD OF COMMISSIONERS FOR GRANT COUNTY:

TIM SNEAD, DIST. #1
LEROY ALLISON, DIST. #2
DEBORAH KAY MOORE, DIST. #3

DIRECTOR OF PUBLIC WORKS:
DEREK POHLE, P.E.

JULY 12, 2004

ZBa
ZECK BUTLER ARCHITECTS PS

CONSULTING ENGINEERS

CIVIL :	DCI ENGINEERS
STRUCTURAL :	STRUCTURAL DESIGN NORTHWEST, INC
MECHANICAL :	L&S ENGINEERING ASSOCIATES
ELECTRICAL :	SUMMIT PROFESSIONAL ENGINEERING, INC.

AS BUILT DRWG'S

SET # 49

0415

Item No. 1: Sheet G1.1 - Sheet Index:
Omit reference to SURVEY sheet. All information on original survey has been incorporated into Civil Drawings.

ARCHITECTURAL ABBREVIATIONS

SEE CIVIL, MECH'L & ELEC'L DRAWINGS FOR ADDITIONAL ABBREVIATIONS

A.B.	ANCHOR BOLT	JT.	JOINT
ACT.	ACOUSTICAL TILE		
A/C	AIR CONDITIONING	LAM.	LAMINATE(D)(ION)
A.D.	AREA DRAIN	LAV.	LAVATORY
A.F.F.	ABOVE FINISH FLOOR	LL.	LIVE LOAD
ALUM.	ALUMINUM	LT.	LIGHT
A.P.	ACCESS PANEL		
A.P.A.	AMERICAN PLYWOOD ASSOCIATION	MAS.	MASONRY
		MECH.	MECHANICAL
ARCH.	ARCHITECT (URAL)	MET.	METAL
		MFG.	MANUFACTURE(ER)
BD.	BOARD	M.H.	MAN HOLE
BET.	BETWEEN	MIN.	MINIMUM
BLDG.	BUILDING	M.O.	MASONRY OPENING
BLK.	BLOCKING	MT.	MOUNT(ED)
B.M.	BENCH MARK	MATL.	MATERIAL
BM.	BEAM		
BOT.	BOTTOM	N.I.C.	NOT IN CONTRACT
BRG.	BEARING	NOM.	NOMINAL
BUR.	BUILT UP ROOFING	N.T.S.	NOT TO SCALE
		NRCA	NATIONAL ROOFING CONTRACTORS ASSOCIATION
CAB.	CABINET		
C.	CAMBER		
C.B.	CATCH BASIN		
C.F.	CONTRACTOR FURNISHED	O.C.	ON CENTER
CF.	CUBIC FEET	O.D.	OUTSIDE DIAMETER
C.I.	CAST IRON	O.F.	OWNER FURNISHED
C.J.	CONTROL JOINT	O.I.	OWNER INSTALLED
CLG.	CEILING	OPG.	OPENING
C.M.T.	CERAMIC MOSAIC TILE	OPP.	OPPOSITE
CMU.	CONCRETE MASONRY UNIT		
COL.	COLUMN	PBD.	PARTICLE BOARD
CONC.	CONCRETE	P.C.	PRECAST CONCRETE
CONST.	CONSTRUCTION	P.F.L.	POUNDS PER LINEAL FOOT
CONTR.	CONTRACT(OR)	P.L.	PROPERTY LINE
CPT.	CARPET	PLAM.	PLASTIC LAMINATE
CTCK.	COUNTERSUNK	PLAS.	PLASTIC
C.T.	CERAMIC TILE	PNL.	PANEL
C.Y.	CUBIC YARD	PNT.	PAINT
		P.S.F.	POUNDS PER SQUARE FOOT
DBL.	DOUBLE	P.S.I.	POUNDS PER SQUARE INCH
D.F.	DRINKING FOUNTAIN	PT.	POINT
DIAG.	DIAGONAL	P.T.D.	PAPER TOWEL DISPENSER
DIA.	DIAMETER	P.T.N.	PARTITION
DIM.	DIMENSION	PWD.	PLYWOOD
DIV.	DIVISION		
DL.	DEAD LOAD	Q.T.	QUARRY TILE
DR.	DOOR		
D.S.	DOWNSPOUT	R.	RISER
DTL.	DETAIL	R.A.	RETURN AIR
DWG.	DRAWING	R.B.	RUBBER BASE
D.W.	DRYWELL	R.D.	ROOF DRAIN
		REF.	REFERENCE
E.B.	EXPANSION BOLT	REV.	REVISION, REVISED
E.J.	EXPANSION JOINT	RM.	ROOM
EL.	ELEVATION	R.O.	ROUGH OPENING
ELEC.	ELECTRIC(AL)	R.O.W.	RIGHT OF WAY
EPDM	ETHYLENE PROPYLENE DIENE MONOMER	R.T.M.	RUBBER TIRE MAT
		RWC.	RAINWATER CONDUCTOR
EQ.	EQUAL	RWL.	RAINWATER LEADER
EQP.	EQUIPMENT		
E.W.	EACH WAY	S.C.	SOLID CORE
EXG.	EXISTING	SHT.	SHEET
EXH.	EXHAUST	SIM.	SIMILAR
EXP.	EXPOSED	SMACNA	SHEET METAL AND AIR CONDITIONING CONTRACTORS NATIONAL ASSOCIATION
EXT.	EXTERIOR		
F.A.	FIRE ALARM		
F.B.O.	FURNISHED BY OTHERS	SPEC.	SPECIFICATION
F.D.	FLOOR DRAIN	SQ.	SQUARE
F.E.	FIRE EXTINGUISHER	S.S.	STAINLESS STEEL
FIN.	FINISH	ST.	STAIN
FLR.	FLOOR(ING)	SUSP.	SUSPENDED
FLUR.	FLUORESCENT	STN.	STAIN
FND.	FOUNDATION		
FP.	FIREPROOF	T.	TREAD
FR.	FRAME(D)(ING)	T.B.	TOWEL BAR
FT.	FOOT	T.C.	TOP OF CURB
FTG.	FOOTING	TEXT.	TEXTURED
FUR.	FURRED(INS)	THK.	THICK(NESS)
		T.P.D.	TOILET PAPER DISPENSER
GA.	GAGE, GAUGE	T.W.	TOP OF WALL
G.B.	GRAB BAR	TYP.	TYPICAL
G.C.	GENERAL CONTRACTOR		
G.I.	GALVANIZED IRON	U.B.C.	UNIFORM BUILDING CODE
GL.	GLASS, GLAZING	U.F.C.	UNIFORM FIRE CODE
GL.BM.	GLUE LAMINATED BEAM	UG.	UNDERGROUND
G.W.B.	GYPSUM WALL BOARD	U.N.O	UNLESS NOTED OTHERWISE
GALV.	GALVANIZED		
		V.B.	VAPOR BARRIER
H.B.	HOSE BIBB	V.C.T.	VINYL COMPOSITION TILE
H.C.	HOLLOW CORE	VERT.	VERTICAL
HDW.	HARDWARE	V.G.	VERTICAL GRAIN
HOR.	HORIZONTAL	VIN.	VINYL
H.M.	HOLLOW METAL	V.T.	VINYL TILE
H.P.	HORSE POWER	V.W.C.	VINYL WALL COVERING
HT.	HEIGHT		
HTG.	HEATING	W.C.	WATER CLOSET
W.H.	WATER HEATER	WD.	WOOD
		WIN.	WINDOW
I.D.	INSIDE DIAMETER	WSCT.	WAINSCOT
INCL.	INCLUDE(D)(ING)	W.W.F.	WELDED WIRE FABRIC
INSUL.	INSULATE(D)(ION)		
INT.	INTERIOR		
INV.	INVERT		

SYMBOLS

THE FOLLOWING SYMBOLS IDENTIFY TYPICAL CONDITIONS AND ELEMENTS AND ARE APPLICABLE ONLY IF UTILIZED IN THE DOCUMENTS

- WORKING POINT OR REFERENCE ELEVATION
- 1 REVISION INDICATION
- TB TEST BORING
- 90.2 SPOT ELEVATION
- EXISTING CONTOURS
- NEW CONTOURS
- PROPERTY CORNER
- PROPERTY LINE OR BOUNDARY LINE
- CENTER OR GRID LINE
- HIDDEN FEATURE OR RELATIONSHIP
- 1 DOOR OPENING NUMBER
- 101 ROOM NUMBER
- 109 EQUIPMENT NUMBER
- 3 WINDOW OPENING NUMBER
- A-12 / A3.1 — DETAIL NUMBER; DETAIL INDICATOR; DRAWING NUMBER WHERE DETAIL IS DRAWN
- A-12 / A3.1 — SECTION NUMBER; BUILDING SECTION OR EXTERIOR ELEVATION INDICATOR; DRAWING NUMBER WHERE SECTION IS DRAWN
- A-12 / A3.1 — SECTION NUMBER; SECTION INDICATOR; DRAWING NUMBER WHERE SECTION IS DRAWN
- A12-3.1 — INTERIOR ELEVATION INDICATOR; DRAWING NUMBER WHERE ELEVATION IS DRAWN; ELEVATION NUMBER
- 4 WALL TYPE IDENTIFIER
- EXISTING DOOR OPG. TO REMAIN
- EXISTING DR. & FR. TO BE REMOVED
- NEW DOOR & FRAME
- WINDOW

- BREAK LINE
- F.H. FIRE HYDRANT
- M.H. MANHOLE
- C.B. CATCH BASIN
- PP POWER POLE
- W WATER LINE
- G GAS LINE
- SS SANITARY SEWER
- SD STORM DRAIN
- C.O. CLEAN OUT
- 2 KEYED NOTE NUMBER (GENERAL NOTE)

A3.1 — DISCIPLINE PREFIX; GROUP DESIGNATION; SHEET NUMERIC CODE; DRAWING NUMBER

DISCIPLINE PREFIX	DISCIPLINE
G	GENERAL WORK
C	SITE SURVEY/CIVIL
AS	ARCHITECTURE SITE
L	LANDSCAPING
A	ARCHITECTURE
S	STRUCTURAL
M	MECHANICAL
E	ELECTRICAL

- GLASS
- GYPSUM BOARD
- NEW WALLS
- ACOUSTICAL CEILING TILE
- NEW ASPHALT PAVING
- NEW CONCRETE
- FIBROUS INSULATION
- RIGID BOARD INSULATION
- LOOSE FILL INSULATION
- EXTERIOR INSULATION & FINISH SYSTEM
- FIBROUS FIRE SAFING
- FINISH LUMBER FOR ARCHITECTURAL WOODWORKS
- EARTH
- GRAVEL, CRUSHED ROCK OR OTHER POROUS MATERIAL AS IDENTIFIED
- ASPHALT PAVEMENT
- CONCRETE
- BRICK
- CONCRETE MASONRY UNIT(CMU)
- CERAMIC OR CLAY TILE AS INDICATED
- STEEL
- ALUMINUM
- PLYWOOD
- WOOD BLOCKING
- CONTINUOUS WOOD FRAMING

SHEET INDEX

GENERAL INFORMATION

G1.1 GENERAL INFORMATION SHEET
~~SURVEY~~

CIVIL

C1.0 CIVIL COVER SHEET
C2.0 GRADING PLAN
C3.0 STORM DRAINAGE PLAN
C4.0 UTILITY PLAN
C5.0 ON-SITE SEWER
C5.1 DETAILS
C6.0 DETAILS

ARCHITECTURAL

AS1.1 SITE PLAN
AS1.2 SITE DETAILS
L1.1 LANDSCAPE PLAN
A1.1 FLOOR PLAN - SHOP BUILDING
A1.2 FLOOR PLAN - VEHICLE STORAGE BUILDING
A2.1 ROOM FINISH SCHEDULE & DOOR SCHEDULE
A3.1 EXTERIOR ELEVATIONS - SHOP BUILDING
A3.2 EXTERIOR ELEVATIONS - VEHICLE STORAGE BUILDING
A3.3 BUILDING CROSS - SECTIONS
A4.1 WALL SECTIONS
A4.2 WALL SECTIONS
A4.3 STAIR PLANS & SECTIONS
A5.1 ROOF PLANS & DETAILS
A6.1 DOOR DETAILS
A6.2 DETAILS
A7.1 ENLARGED BATHROOM PLAN & INTERIOR ELEVATIONS
A8.1 FUEL ISLAND PLAN & DETAILS

STRUCTURAL

S0.1 GENERAL STRUCTURAL NOTES & TYPICAL DETAILS
S2.1 SHOP BUILDING FLOOR / FOUNDATION PLAN
MEZZANINE FLOOR FRAMING PLAN & DETAILS
S2.2 SHOP BUILDING CRANE BEAM PLAN & DETAILS
S2.3 SHOP BUILDING ROOF FRAMING PLAN & DETAILS
S2.4 VEHICLE STORAGE BUILDING
S2.5 VEHICLE STORAGE BUILDING
S5.1 DETAILS
S5.2 DETAILS

MECHANICAL

M0.1 LEGENDS AND SCHEDULES
M0.2 PLUMBING FIXTURES
M2.1 FOUNDATION PLAN SHOP - PLUMBING
M2.2 WASH BAY PLAN - PLUMBING
M2.3 SHOP PLAN - PLUMBING & PIPING
M3.1 PLUMBING & PIPING DETAILS
M4.1 SHOP PLAN - HVAC
M4.2 WASH BAY PLAN - HVAC
M4.3 HVAC DETAILS
M5.1 MECHANICAL BUILDING SECTIONS

ELECTRICAL

E0.1 SYMBOLS LISTS & SCHEDULES
E0.2 ONE-LINE DIAGRAM, CONTROL DIAGRAMS & DETAILS
E0.3 PANEL SCHEDULES
E0.4 PANEL SCHEDULES & CONTROL DIAGRAMS
E1.1 SITE PLAN - ELECTRICAL
E1.2 SHOP FLOOR PLAN - LIGHTING
E1.3 SHOP FLOOR PLAN - POWER SYSTEMS
E2.1 VEHICLE STORAGE FLOOR PLAN - ELECTRICAL

ADDENDUM NO. 1
ATTACHMENT No. 1

SITE LOCATION MAP

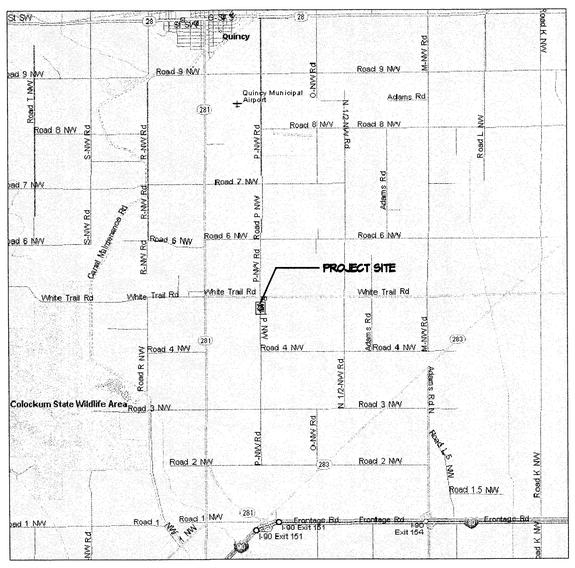

CODE DATA

SHOP BUILDING SUMMARY

OCCUPANCY GROUP: S-1

CONSTRUCTION TYPE: II-B, WITHOUT AUTOMATIC FIRE SPRINKLER SYSTEM

BUILDING HEIGHT: 36 FEET, ONE STORY WITH MEZZANINE.
ALLOWED: 55 FEET, THREE STORIES

AREAS:

	FLOOR AREAS	OCCUPANCY
WELDING BAY	2,000 S.F.	S-1
SHOP	6,119 S.F.	S-1
OFFICE	1,702 S.F.	S-1
MEZZANINE	624 S.F.	S-1

TOTAL AREA: 10,450 S.F.
ALLOWED: 17,500 S.F.

TOTAL AREA IS LESS THAN 12,000 SQ. FT. AND IS NOT REQUIRED TO BE FIRE SPRINKLED (IBC 903.2.8)

VEHICLE STORAGE BUILDING SUMMARY

OCCUPANCY GROUP: S-2

CONSTRUCTION TYPE: V-B, WITHOUT AUTOMATIC FIRE SPRINKLER SYSTEM

BUILDING HEIGHT: 26 FEET, ONE STORY WITH MEZZANINE.
ALLOWED: 40 FEET, 2 STORIES

AREAS:

	FLOOR AREAS	OCCUPANCY
VEHICLES	8,100 S.F.	S-2
STORAGE	1,126 S.F.	S-2
WASH BAY	1,521 S.F.	S-2
MEZZANINE	634 S.F.	S-2

TOTAL AREA: 11,381 S.F.
ALLOWED: 19,500 S.F.

FIRE SPRINKLER NOT REQUIRED DUE TO QUANTITY AND SIZE OF OPENINGS ALONG BUILDING. (IBC 903.2.10.1 (2.))

Item No. 2: Sheet G1.1 - Code Data:
Replace the Code Data with Attachment No. 1 of this Addendum.

GENERAL NOTES

1. VERIFY ALL CONDITIONS & DIMENSIONS PRIOR TO STARTING WORK. NOTIFY ARCHITECT OF ANY DISCREPANCIES WITH THE DRAWINGS.
2. ALL MATERIALS AND WORKMANSHIP SHALL CONFORM TO THE 2003 EDITION OF THE INTERNATIONAL BUILDING CODE, 2003 IMC & 2002 NEC.
3. THE DESIGN, ADEQUACY AND SAFETY OF ERECTION BRACING, SHORING, TEMPORARY SUPPORTS, ETC., IS THE SOLE RESPONSIBILITY OF THE CONTRACTOR, AND HAS NOT BEEN CONSIDERED BY THE ARCHITECT. THE CONTRACTOR IS RESPONSIBLE FOR THE STABILITY OF THE SHEAR WALLS, ROOF AND FLOOR DIAPHRAGMS AND FINISH MATERIALS. THE CONTRACTOR SHALL PROVIDE THE NECESSARY BRACING TO PROVIDE STABILITY PRIOR TO THE APPLICATION OF THE ABOVE MENTIONED COMPONENTS. OBSERVATION VISITS TO THE SITE BY THE ARCHITECT SHALL NOT INCLUDE INSPECTION OF THE ABOVE ITEMS.

No.	DATE	BY
4		
3		
2		
1		

ZECK BUTLER ARCHITECTS PS
ZB
The Paulsen Center 421 W Riverside Suite 220 Spokane WA 99201 t. 509. 456. 8236 f. 509. 747. 0570
© www.zeckbutler.com

GENERAL-INFORMATION

PROJECT TITLE
GRANT COUNTY
PUBLIC WORKS DEPARTMENT
ROAD DISTRICT NO. 3 SHOP FACILITY
QUINCY, WASHINGTON

SEAL
6829 REGISTERED ARCHITECT
WILLIAM ARTHUR FROEMKE
STATE OF WASHINGTON

DATE	7/12/04
DRAWN	SVG/TG
CHECKED	WAF/RFW
PROJECT NUMBER	0415
DRAWING NO.	G1.1

GRANT COUNTY - QUINCY SHOPS

EPHRATA, WASHINGTON

NE 1/4, SEC. 8, T.19N., R.24 E. W.M.

ABBREVIATIONS

ACP	Asphaltic Concrete Pavement	w/	With	N	North(ing)
ADD'L	Additional	WT	Weight	NO (#)	Number
AD	Area Drain	WWF	Welded Wire Fabric	OC	On Center
ADJ	Adjacent	YD	Yard Drain	O/W	Oil Water
ANSI	American National Standards Institute	EQUIV	Equivalent	P	Power
APPROX	Approximate(ly)	EVC	End of Vertical Curve	PC	Point of Curvature
ARCH	Architect(ural)	EXIST	Existing	PIV	Post Indicator Valve
ASSY	Assembly	FD	Floor Drain	PP	Power Pole
BLDG	Building	FDC	Fire Department Connection	PL or ℄	Property Line
BM	Benchmark	FDN	Foundation	PSF	Pounds Per Square Foot
BNDRY	Boundary	FFE	Finish Floor Elevation	PSI	Pounds Per Square Inch
BVC	Beginning of Vertical Curve	FH	Fire Hydrant	PT	Point of Tangency
C	Cable TV	FL	Flanged	PVC	Polyvinyl Chloride
C&G	Curb and Gutter	FLR	Floor	PVI	Point of Vertical Inflection
CB	Catch Basin	FOC	Face of Curb	QTY	Quantity
CC	Concrete Curb	FS	Finished Surface	RAD (R)	Radius
CD	Concrete Drive	FT (')	Foot (feet)	RCP	Reinforced Concrete Pipe
CF	Cubic Feet (Foot)	FTG	Footing	RD	Road
CI	Cast Iron	G	Gas Main	REF	Reference
CJ	Construction Joint	GB	Grade Break	REQD	Required
CL	Class	GRD	Grade	RET	Retaining
CL or ℄	Center Line	GV	Gate Valve	ROW	Right of Way
CMP	Corrugated Metal Pipe	HB	Hose Bibb	SHT	Sheet
CONC	Concrete	HDPE	High Density Polyethylene	SIM	Similar
CONST	Construction	HORIZ(H)	Horizontal	SPEC	Specification(s)
CPEP	Corrugated Polyethylene Pipe	HT	Height	STA	Station
CTR	Center(ed)	HYD	Hydrant	SQ	Square
CY	Cubic Yard	ID	Inside Diameter	SS	Sanitary Sewer
DCVA	Double Check Valve Assembly	IE	Invert Elevation	SD	Storm Drain
DDCV	Double Detector Check Valve	IN (")	Inch(es)	STD	Standard
DEPT	Department	INV	Invert	TOE	Toe of Wall, or Slope
DET	Detail	IRR	Irrigation Water	T	Telephone Wire
DI	Ductile Iron	LB	Pound(s)	TC	Telephone Conduit
DIA (ø)	Diameter	LCPE	Lined Corrugated Polyethylene Pipe	TOC	Top of Curb
DIM	Dimension	LF	Linear Feet	TG	Top of Grate
DS	Down Spout	MAT'L	Material	TEMP	Temporary
DWG	Drawing	MAX	Maximum	TOP	Top of Wall, or Slope
E	East(ing)	MFR	Manufacturer	TV	Television Wire
EC	Electrical Conduit	MH	Manhole	TYP	Typical
ECC	Extruded Concrete Curb	MJ	Mechanical Joint	VC	Vertical Curve
ELEV	Elevation	MIN	Minimum	VERT (V)	Vertical
EOP	Edge of Pavement	MISC	Miscellaneous	WM	Water Meter

LEGEND

STORM PIPE

CATCH BASIN — CB

STORM MANHOLE — STMH OR EX.STMH

SANITARY SEWER PIPE

SANITARY SEWER MANHOLE — SSMH

WATER MAINS

FIRE HYDRANT AND FDC

WATER METERS

WATER VALVES

FITTINGS WITH THRUST BLOCKS

SURFACE WTR AND PIPE DIRECTION FLOW

EXISTING CONTOUR LABELS — (457)

PROPOSED CONTOUR LABELS — 457

GROUND SPOT ELEVATIONS (TENTHS) — + 756.5 — 756.5

FINISHED SURFACE ELEVATIONS (HUNDREDTHS) — + 756.75 — 756.55 F.S.

TOP OF WALL/TOE OF WALL — 296.6 / 292.0

SLOPE INDICATORS — 3:1 — 2:1

RIP RAP

FILTER FABRIC FENCING

RAIN WATER LEADERS (RWL)

CLEANOUTS (C.O.) SS, AND RWL

INTERCEPTOR AND BIO-SWALES

CEMENT CONCRETE

COORDINATES, & LEADERS — N 1000.00 E 5000.00

STUBBED & PLUGGED LINE

EXTRUDED CONC. CURB

CURB & GUTTER

ASPHALT CONCRETE PAVEMENT

GENERAL CONSTRUCTION NOTES

1. UNLESS SPECIFICALLY EXCEPTED IN THE PLANS OR CONTRACT DOCUMENTS, ALL CONSTRUCTION METHODS AND MATERIALS SHALL BE IN ACCORDANCE WITH STANDARD SPECIFICATIONS AND STANDARD PLANS FOR ROAD, BRIDGE, AND MUNICIPAL CONSTRUCTION PROMULGATED BY THE WASHINGTON STATE DEPARTMENT OF TRANSPORTATION AND THE WASHINGTON CHAPTER OF THE AMERICAN PUBLIC WORKS ASSOCIATION, (LATEST EDITION) AND THE "GRANT COUNTY STANDARDS.
2. THE PLANS ARE SCHEMATIC AND ARE NOT INTENDED TO DEPICT ALL DETAILS OF THE WORK REQUIRED. THE CONTRACTOR SHALL BE RESPONSIBLE TO FAMILIARIZE HIMSELF WITH ACTUAL SITE CONDITIONS, REQUIREMENTS AND FACTORS AFFECTING THE WORK. WHERE LACK OF DETAIL OR CONFLICT EXISTS BETWEEN THESE AND OTHER PLANS, THE CONTRACTOR SHALL NOTIFY THE OWNER TO RESOLVE THE ISSUE PRIOR TO PROCEEDING. IF THE CONTRACTOR DISCOVERS ANY DISCREPANCIES BETWEEN THE PLANS AND EXISTING CONDITIONS ENCOUNTERED, THE CONTRACTOR SHALL NOTIFY THE DESIGN ENGINEER AND THE GRANT COUNTY ENGINEER'S OFFICE.
3. EXCAVATION AND EMBANKMENT SHALL BE IN ACCORDANCE WITH APPLICABLE REQUIREMENTS OF SECTION 2-03 OF THE STANDARD SPECIFICATIONS. ALL COMPACTION SHALL BE IN ACCORDANCE WITH SECTION 2-03.3(14)C, METHOD C FOR BUILDING PADS, METHOD B FOR OTHER AREAS.
4. THIS PLAN MAY NOT SHOW ALL EXISTING UTILITIES. EXISTING UTILITY LOCATIONS SHOWN ARE APPROXIMATE. PRIOR TO CONSTRUCTION, THE CONTRACTOR IS RESPONSIBLE FOR LOCATING ALL UNDERGROUND UTILITIES. CALL THE UNDERGROUND UTILITY LOCATION SERVICE AT 1-800-424-5555 BEFORE YOU DIG. ANY CONFLICTING UTILITIES SHALL BE RELOCATED PRIOR TO CONSTRUCTION. IN THE CASE WHEN RELOCATION IS REQUIRED, THE APPLICABLE UTILITY COMPANY SHALL BE NOTIFIED AND ANY COST REFLECTING THE RELOCATION OR ADJUSTMENTS SHALL BE AGREED UPON.
5. ALL FINISHED GRADING ELEVATIONS SHALL MATCH EXISTING ELEVATIONS AT THE SITE'S BOUNDARY, EXCEPT AS SHOWN OTHERWISE IN THE GRADING PLAN. WHERE CONFLICTS EXIST, THE CONTRACTOR SHALL NOTIFY OWNER TO RESOLVE THE ISSUE PRIOR TO PROCEEDING.
6. THE CONTRACTOR SHALL REMOVE ALL WASTE MATERIAL.
7. GRADING: ALL GRADING SHALL BE LIMITED TO THE AREAS IDENTIFIED IN THE GRADING PLAN AND SHALL NOT INFRINGE ON ADJACENT OWNERSHIPS, EXCEPT AS SHOWN OTHERWISE ON THE PLANS.
8. THE CONTRACTOR IS REQUIRED TO HAVE A COMPLETE SET OF THE APPROVED PLANS ON THE JOB SITE WHENEVER CONSTRUCTION IS IN PROGRESS. THE CONTRACTOR SHALL HAVE A RESPONSIBLE PARTY WHO SHALL HAVE THE AUTHORITY TO REPRESENT AND ACT FOR THE CONTRACTOR AT THE JOB SITE DURING ALL WORKING HOURS.
9. THE CONTRACTOR IS RESPONSIBLE FOR OBTAINING ALL REQUIRED PERMITS AND APPROVALS BY THE GRANT COUNTY PRIOR TO CONSTRUCTION.
10. SEE ARCHITECTURAL PLANS FOR HANDICAP ACCESSES, SIGNAGE AND APPLICABLE DETAILS.
11. THE CONTRACTOR SHALL PROTECT ALL CATCH BASINS, DRYWELLS, AND OTHER STORM DRAINAGE STRUCTURES FROM BEING CONTAMINATED WITH SILT BY INSTALLING FILTER FABRIC OVER THE METAL FRAME DURING CONSTRUCTION AND KEEPING IT IN PLACE UNTIL THE SITE HAS BEEN PAVED AND CLEANED.
12. CUT SLOPES IN SOLID ROCK SHALL NOT EXCEED 1/2:1 (HORIZONTAL:VERTICAL), AND SOIL CUT SLOPES SHALL NOT EXCEED 2:1 (HORIZONTAL: VERTICAL), EXCEPT AS SHOWN OTHERWISE IN THE PLANS.
13. FILL SLOPES ACROSS THE PROPERTY SHOULD BE DESIGNED FOR A MAXIMUM SLOPE OF 2:1 (HORIZONTAL:VERTICAL), EXCEPT AS SHOWN OTHERWISE IN THE PLANS.
14. CONTRACTOR SHALL PROVIDE ALL MATERIALS, LABOR AND EQUIPMENT TO CONSTRUCT AND INSTALL TO PROPER WORKING ORDER, THE DESIGN SHOWN, AS DETAILED OR CALLED OUT IN THESE PLANS AND SPECIFICATIONS.
15. NO FIRE FLOW ANALYSIS WAS COMPLETED AS PART OF THIS PROJECT BY DCI ENGINEERS. SEE FIRE PROTECTION CONSULTANT.
16. A PRE-CONSTRUCTION MEETING SHALL BE HELD WITH THE GRANT COUNTY CONSTRUCTION INSPECTOR PRIOR TO THE START OF CONSTRUCTION.
17. THE CONTRACTOR SHALL PROVIDE THE DESIGN ENGINEERS WITH RECORD DRAWINGS PRIOR TO FINAL APPROVAL. ALL DEVIATIONS FROM THE ORIGINAL PLANS MADE DURING THE COURSE OF THE CONSTRUCTION INCLUDING LOCATION, INVERTS, AND DEPTHS OF UTILITIES SHALL BE CLEARLY MARKED IN THE RECORD DRAWINGS, THE ENGINEERS SHALL PROVIDE THE CITY ENGINEER WITH "RECORD DRAWINGS" AS REQUIRED.
18. THE SURVEY IS FOR INFORMATIONAL PURPOSES ONLY. NO CERTIFICATIONS ARE EXPRESSED OR IMPLIED. THE SURVEY WAS PROVIDED BY OTHERS.

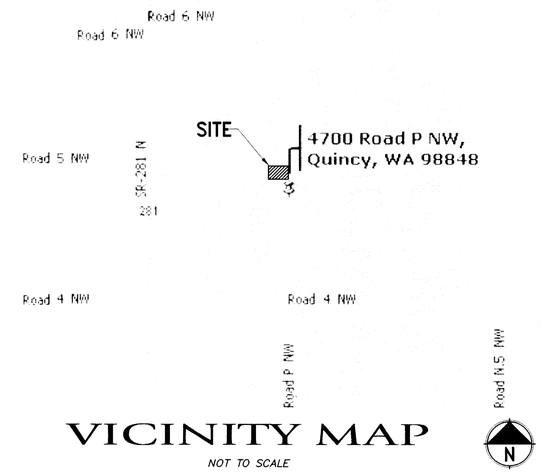

VICINITY MAP

NOT TO SCALE

SHEET INDEX

COVER SHEET ---------- C1.0
GRADING PLAN ---------- C2.0
STORM DRAINAGE PLAN ---------- C3.0
UTILITY PLAN ---------- C4.0
ON-SITE SEWER ---------- C5.0-C5.1
NOTES AND DETAILS ---------- C6.0

CONTRACTOR NOTE

ALL EXISTING UTILITIES SHOWN ON PLANS ARE TO BE VERIFIED HORIZONTALLY AND VERTICALLY PRIOR TO ANY CONSTRUCTION. ALL EXISTING FEATURES INCLUDING BURIED UTILITIES ARE SHOWN AS INDICATED ON RECORD MAPS AND SURVEYS FURNISHED BY OTHERS. WE ASSUME NO LIABILITY FOR THE ACCURACY OF THOSE RECORDS AND SURVEYS, FOR THE FINAL LOCATION OF EXISTING UTILITIES IN AREAS CRITICAL TO CONSTRUCTION CONTACT THE UTILITY OWNER/AGENCY.

UNDERGROUND SERVICE ALERT
ONE-CALL NUMBER
(800)424-5555
CALL TWO BUSINESS DAYS BEFORE YOU DIG

No.	DATE	BY
4		
3		
2		
1		

CONSULTANTS:
DCI ENGINEERS
D'AMATO CONVERSANO INC.
421 WEST RIVERSIDE - SUITE 606 PHONE: (509)455-4448
SPOKANE, WASHINGTON 99201 FAX: (509)455-7492
CIVIL / STRUCTURAL

ZECK BUTLER ARCHITECTS PS
ZBa
The Paulsen Center 421 W Riverside Suite 220 Spokane WA 99201 t 509.456.8236 f 509.747.0570
e www.zeckbutler.com

SHEET TITLE: COVER SHEET

PROJECT TITLE: QUINCY SHOPS
GRANT COUNTY PUBLIC WORKS
EPHRATA, WASHINGTON

SEAL: DAVID A. SMITH, STATE OF WASHINGTON, 22004, REGISTERED PROFESSIONAL ENGINEER — EXPIRES 9/27/2004

DATE	07-12-04
DRAWN	JPC
CHECKED	DAS
PROJECT NUMBER	04-42-029
DRAWING NO.	C1.0

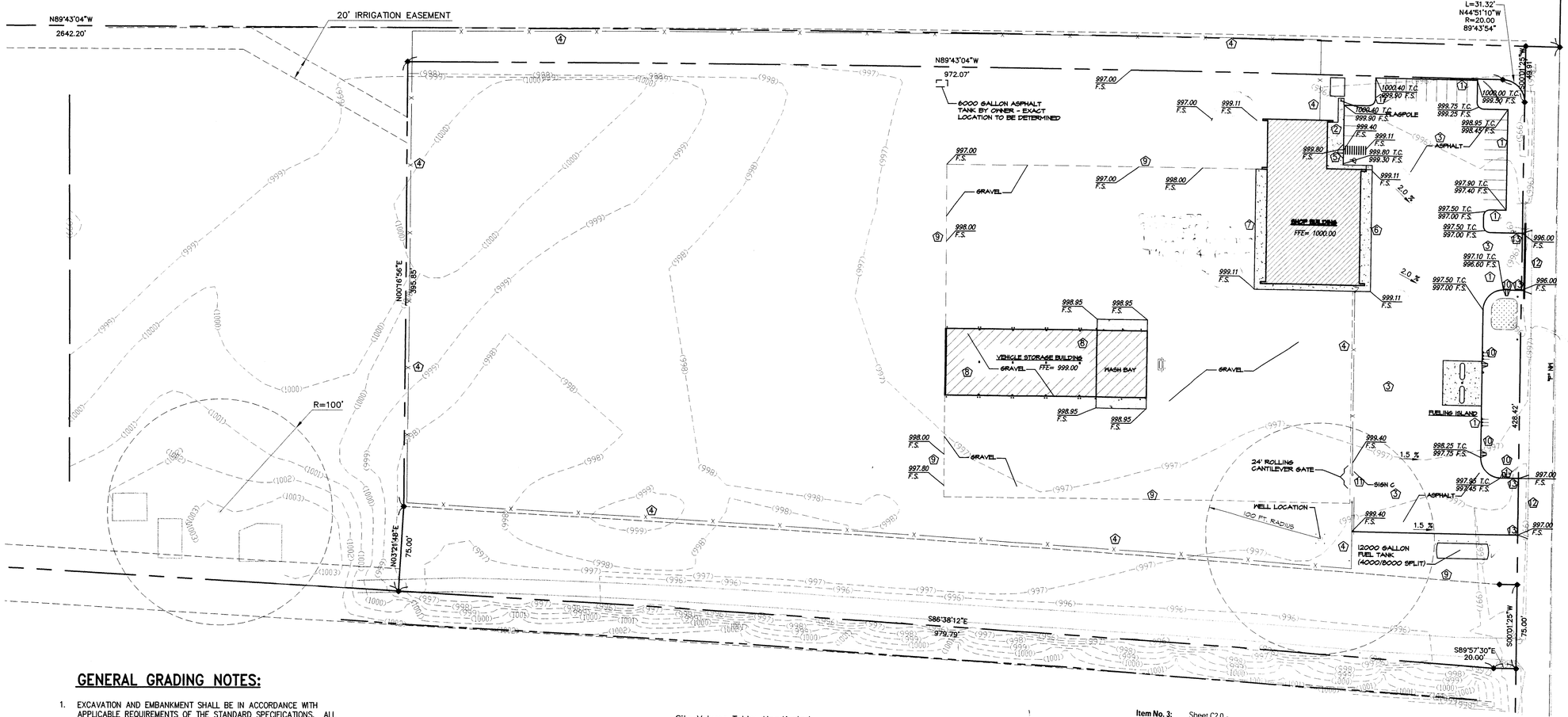

GENERAL GRADING NOTES:

1. EXCAVATION AND EMBANKMENT SHALL BE IN ACCORDANCE WITH APPLICABLE REQUIREMENTS OF THE STANDARD SPECIFICATIONS. ALL COMPACTION OF SUB GRADE, ROCK, AND ASPHALT SHALL BE IN ACCORDANCE WITH THE STANDARD SPECIFICATIONS.
2. ALL FINISHED GRADING ELEVATIONS SHALL MATCH EXISTING ELEVATIONS AT THE SITE'S BOUNDARY, EXCEPT AS SHOWN OTHERWISE IN THE GRADING PLAN. WHERE CONFLICTS EXIST, THE CONTRACTOR SHALL NOTIFY THE ARCHITECT TO RESOLVE THE ISSUE PRIOR TO PROCEEDING.
3. QUANTITIES HAVE BEEN CALCULATED TO DETERMINE VOLUMES OF EXCAVATION AND EMBANKMENT ON THIS PROJECT. BORROW MATERIAL AVAILABLE LOCALLY. IT SHALL BE THE CONTRACTOR'S RESPONSIBILITY FOR LOCATING THE MATERIAL. ALL COSTS SHALL BE INCLUDED IN THE BID.
4. GRADING: ALL GRADING SHALL BE LIMITED TO THE AREAS IDENTIFIED IN THE GRADING PLAN AND SHALL NOT INFRINGE ON ADJACENT OWNERSHIPS.
5. CUT SLOPES IN SOLID ROCK SHALL NOT EXCEED ½ : 1 (HORIZONTAL: VERTICAL), AND SOIL CUT SLOPES SHALL NOT EXCEED 2 : 1 (HORIZONTAL: VERTICAL), EXCEPT AS SHOWN OTHERWISE IN THE PLANS.
6. FILL SLOPES ACROSS THE PROPERTY SHOULD BE DESIGNED FOR A MAXIMUM SLOPE OF 2 : 1 (HORIZONTAL: VERTICAL), EXCEPT AS SHOWN OTHERWISE IN THE PLANS.
7. ALL CURB AND GUTTER, STREET GRADES, SIDEWALK GRADES, AND ANY OTHER VERTICAL AND/OR HORIZONTAL ALIGNMENT SHALL BE STAKED BY AN ENGINEERING OR SURVEYING FIRM CAPABLE OF PERFORMING SUCH WORK.
8. FORM AND SUB GRADE INSPECTION BY THE INSPECTOR IS REQUIRED BEFORE POURING CONCRETE. TWENTY-FOUR HOURS NOTICE IS REQUIRED FOR FORM INSPECTION.
9. WHERE NEW ASPHALT JOINS EXISTING, THE EXISTING ASPHALT SHALL BE SAWCUT TO A NEAT VERTICAL EDGE AND TACKED WITH ASPHALT EMULSION TYPE CSS-1 IN ACCORDANCE WITH THE STANDARD SPECIFICATIONS. THE NEW ASPHALT SHALL BE FEATHERED BACK OVER EXISTING TO PROVIDE FOR A SEAL AT THE SAW CUT LOCATION AND THE JOINT SEALED WITH GRADE AR-4000W PAVING ASPHALT.
10. TOP OF CURB AND FLOW LINE ELEVATIONS ARE PROVIDED BASED ON A SURVEY PROVIDED BY OTHERS. EXISTING CROSS SLOPE AND FLOW LINES SHALL BE MATCHED. TOP OF CURB SHALL BE 0.5' ABOVE FACE OF CURB FLOW LINE ELEVATIONS. ELEVATIONS SHALL BE ADJUSTED, IF REQUIRED, TO MATCH FIELD CONDITIONS.
11. CONTRACTOR TO PROVIDE ALL GRAVEL AS SPECIFIED AND INSTALL. THIS INCLUDES THE GRAVEL OUTSIDE OF BUILDINGS AND INSIDE BAYS IN THE VEHICLE STORAGE BUILDINGS.

Site Volume Table: Unadjusted

Site	Stratum	Surf1	Surf2	Cut yards	Fill yards	Net yards	Method
04-42-028-GRANT-COUNTY-QUINCY-v1	eg	fs		99	14598	14499 (F)	Grid
				176	15670	15494 (F)	Composite
				173	15636	15463 (F)	End area

Item No. 3: Sheet C2.0 -
Depth of gravel drives, including gravel in Vehicle Storage Building, is 6".

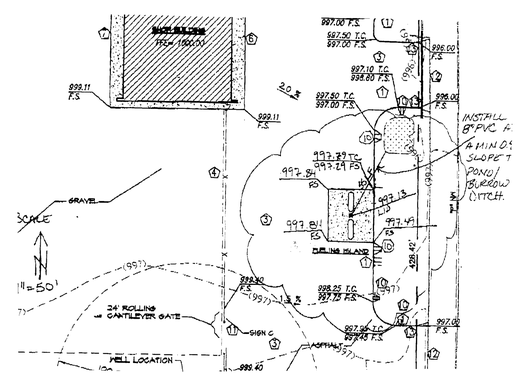

REFERENCE NOTES:

1. INSTALL TYPE "A" CURBING PER DETAIL 6/C6.0.
2. FOR CURB AND SIDEWALK DETAIL SEE ARCH. PLANS.
3. INSTALL HEAVY ASPHALT PER DETAIL 5/C6.0.
4. INSTALL FENCING PER ARCHITECTURAL PLANS.
5. FOR RAMP DETAIL SEE ARCH. PLANS, OWNER PROVIDED, CONTRACTOR INSTALLED TRUNCATED DOME/DETECTABLE WARNING TILE STRIP.
6. INSTALL ASPHALT AND CONCRETE FLUSH. SEE DETAIL 5/C6.0.
7. INSTALL GRAVEL AND CONCRETE FLUSH. SEE DETAIL 8/C6.0.
8. INSTALL GRAVEL INSIDE TRUCK BAYS.
9. LIMITS OF CLEARING, GRUBBING, AND GRAVEL SURFACE. SEE DETAIL 8/C6.0 FOR GRAVEL THICKNESS.
10. INSTALL CURB INLET PER DETAIL 9/C6.0.
11. SEE ARCH. PLANS FOR 24" ROLLING GATE SPECIFICATION.
12. CONTRACTOR TO MATCH EGDE OF THE EXISTING ASPHALT WITH THE NEW SURFACE.
13. BULL NOSE THE NEW CURB AT THE PROPERTY LINE.

CONTRACTOR NOTE

ALL EXISTING UTILITIES SHOWN ON PLANS ARE TO BE VERIFIED HORIZONTALLY AND VERTICALLY PRIOR TO ANY CONSTRUCTION. ALL EXISTING FEATURES INCLUDING BURIED UTILITIES ARE SHOWN AS INDICATED ON RECORD MAPS AND SURVEYS FURNISHED BY OTHERS. WE ASSUME NO LIABILITY FOR THE ACCURACY OF THOSE RECORDS AND SURVEYS, FOR THE FINAL LOCATION OF EXISTING UTILITIES IN AREAS CRITICAL TO CONSTRUCTION CONTACT THE UTILITY OWNER/AGENCY.

N

GRAPHIC SCALE
50 0 25 50
(IN FEET)
1 inch = 50 ft.

UNDERGROUND SERVICE ALERT
ONE-CALL NUMBER
(800)424-5555
CALL TWO BUSINESS DAYS BEFORE YOU DIG

No.	DATE	BY
4		
3		
2		
1		

CONSULTANTS:
DCI ENGINEERS
D'AMATO CONVERSANO INC.
421 WEST RIVERSIDE - SUITE 606 PHONE: (509)455-4448
SPOKANE, WASHINGTON 99201 FAX: (509)455-7462
CIVIL / STRUCTURAL

ZECK BUTLER ARCHITECTS PS
The Paulsen Center 421 W Riverside Suite 220 Spokane WA 99201 t 509 . 456 . 8236 f 509 . 747 . 0570
e www.zeckbutler.com

SHEET TITLE: GRADING PLAN
PROJECT TITLE: QUINCY SHOPS
GRANT COUNTY PUBLIC WORKS
EPHRATA, WASHINGTON

SEAL: STATE OF WASHINGTON, DAVID A. SITTA, REGISTERED PROFESSIONAL ENGINEER, EXPIRES 9/27/2004

DATE	07-12-04
DRAWN	JPC
CHECKED	DAS
PROJECT NUMBER	04-42-029
DRAWING NO.	C2.0

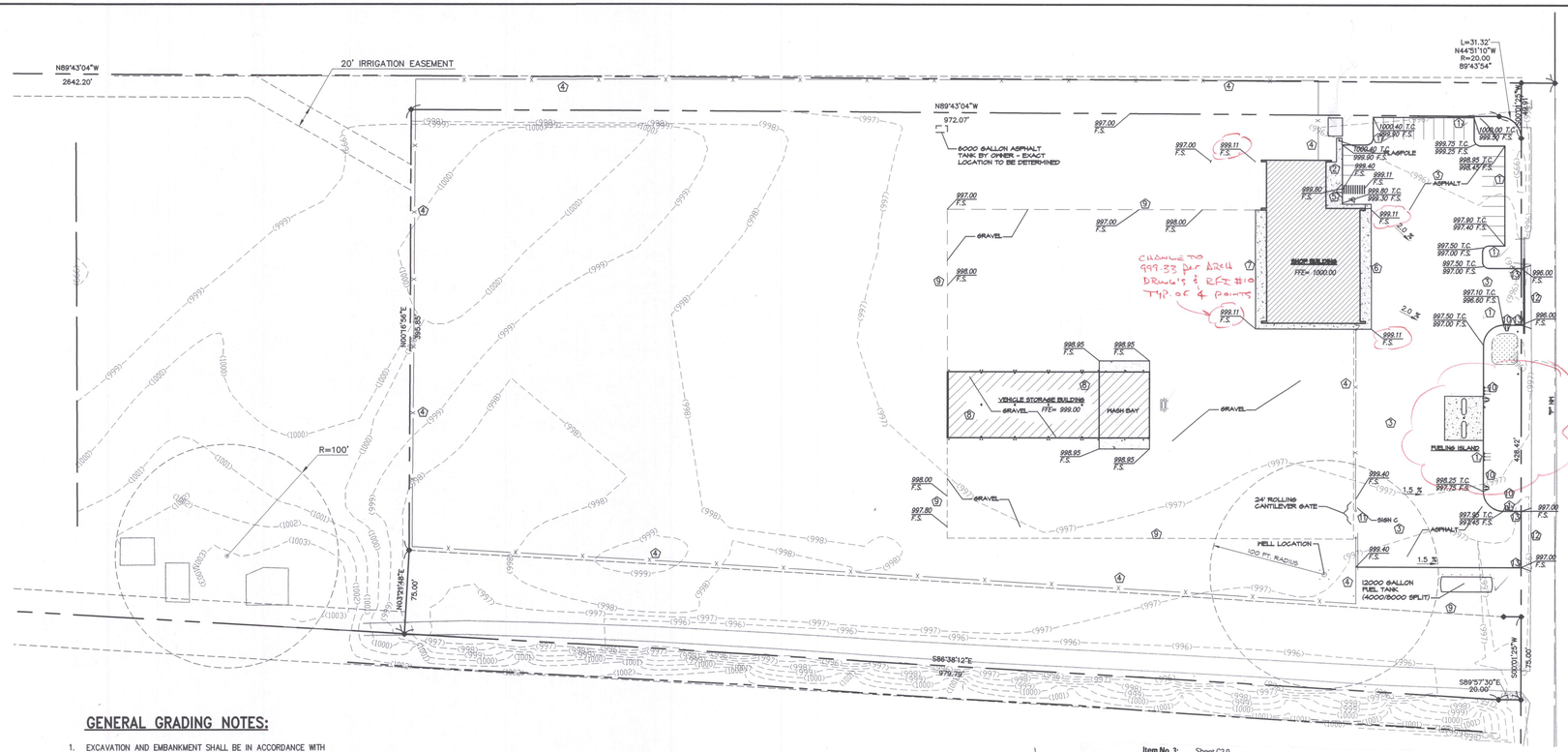

GENERAL GRADING NOTES:

1. EXCAVATION AND EMBANKMENT SHALL BE IN ACCORDANCE WITH APPLICABLE REQUIREMENTS OF THE STANDARD SPECIFICATIONS. ALL COMPACTION OF SUB GRADE, ROCK, AND ASPHALT SHALL BE IN ACCORDANCE WITH THE STANDARD SPECIFICATIONS.
2. ALL FINISHED GRADING ELEVATIONS SHALL MATCH EXISTING ELEVATIONS AT THE SITE'S BOUNDARY, EXCEPT AS SHOWN OTHERWISE IN THE GRADING PLAN. WHERE CONFLICTS EXIST, THE CONTRACTOR SHALL NOTIFY THE ARCHITECT TO RESOLVE THE ISSUE PRIOR TO PROCEEDING.
3. QUANTITIES HAVE BEEN CALCULATED TO DETERMINE VOLUMES OF EXCAVATION AND EMBANKMENT ON THIS PROJECT. BORROW MATERIAL AVAILABLE LOCALLY. IT SHALL BE THE CONTRACTOR'S RESPONSIBILITY FOR LOCATING THE MATERIAL. ALL COSTS SHALL BE INCLUDED IN THE BID.
4. GRADING: ALL GRADING SHALL BE LIMITED TO THE AREAS IDENTIFIED IN THE GRADING PLAN AND SHALL NOT INFRINGE ON ADJACENT OWNERSHIPS.
5. CUT SLOPES IN SOLID ROCK SHALL NOT EXCEED ½ : 1 (HORIZONTAL: VERTICAL), AND SOIL CUT SLOPES SHALL NOT EXCEED 2 : 1 (HORIZONTAL: VERTICAL), EXCEPT AS SHOWN OTHERWISE IN THE PLANS.
6. FILL SLOPES ACROSS THE PROPERTY SHOULD BE DESIGNED FOR A MAXIMUM SLOPE OF 2 : 1 (HORIZONTAL: VERTICAL), EXCEPT AS SHOWN OTHERWISE IN THE PLANS.
7. ALL CURB AND GUTTER, STREET GRADES, SIDEWALK GRADES, AND ANY OTHER VERTICAL AND/OR HORIZONTAL ALIGNMENT SHALL BE STAKED BY AN ENGINEERING OR SURVEYING FIRM CAPABLE OF PERFORMING SUCH WORK.
8. FORM AND SUB GRADE INSPECTION BY THE INSPECTOR IS REQUIRED BEFORE POURING CONCRETE. TWENTY-FOUR HOURS NOTICE IS REQUIRED FOR FORM INSPECTION.
9. WHERE NEW ASPHALT JOINS EXISTING, THE EXISTING ASPHALT SHALL BE SAWCUT TO A NEAT VERTICAL EDGE AND TACKED WITH ASPHALT EMULSION TYPE CSS-1 IN ACCORDANCE WITH THE STANDARD SPECIFICATIONS. THE NEW ASPHALT SHALL BE FEATHERED BACK OVER EXISTING TO PROVIDE FOR A SEAL AT THE SAW CUT LOCATION AND THE JOINT SEALED WITH GRADE AR-4000W PAVING ASPHALT.
10. TOP OF CURB AND FLOW LINE ELEVATIONS ARE PROVIDED BASED ON A SURVEY PROVIDED BY OTHERS. EXISTING CROSS SLOPE AND FLOW LINES SHALL BE MATCHED. TOP OF CURB SHALL BE 0.5' ABOVE FACE OF CURB FLOW LINE ELEVATIONS. ELEVATIONS SHALL BE ADJUSTED, IF REQUIRED, TO MATCH FIELD CONDITIONS.
11. CONTRACTOR TO PROVIDE ALL GRAVEL AS SPECIFIED AND INSTALL. THIS INCLUDES THE GRAVEL OUTSIDE OF BUILDINGS AND INSIDE BAYS IN THE VEHICLE STORAGE BUILDINGS.

Site Volume Table: Unadjusted

Site	Stratum Surf1 Surf2	Cut yards	Fill yards	Net yards	Method
04-42-028-GRANT-COUNTY-QUINCY-	v1 eg fs				
	99	14598		14499 (F)	Grid
	176	15670		15494 (F)	Composite
	173	15636		15463 (F)	End area

Item No. 3: Sheet C2.0 -
Depth of gravel drives, including gravel in Vehicle Storage Building, is 6".

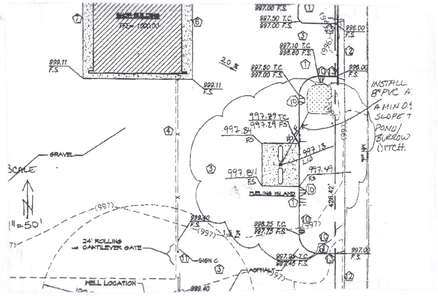

REFERENCE NOTES:

1. INSTALL TYPE "A" CURBING PER DETAIL 6/C6.0.
2. FOR CURB AND SIDEWALK DETAIL SEE ARCH. PLANS.
3. INSTALL HEAVY ASPHALT PER DETAIL 5/C6.0.
4. INSTALL FENCING PER ARCHITECTURAL PLANS.
5. FOR RAMP DETAIL SEE ARCH. PLANS, OWNER PROVIDED, CONTRACTOR INSTALLED TRUNCATED DOME/DETECTABLE WARNING TILE STRIP.
6. INSTALL ASPHALT AND CONCRETE FLUSH. SEE DETAIL 5/C6.0.
7. INSTALL GRAVEL AND CONCRETE FLUSH. SEE DETAIL 8/C6.0.
8. INSTALL GRAVEL INSIDE TRUCK BAYS.
9. LIMITS OF CLEARING, GRUBBING, AND GRAVEL SURFACE. SEE DETAIL 8/C6.0 FOR GRAVEL THICKNESS.
10. INSTALL CURB INLET PER DETAIL 9/C6.0.
11. SEE ARCH. PLANS FOR 24" ROLLING GATE SPECIFICATION.
12. CONTRACTOR TO MATCH EGDE OF THE EXISTING ASPHALT WITH THE NEW SURFACE.
13. BULL NOSE THE NEW CURB AT THE PROPERTY LINE.

CONTRACTOR NOTE

ALL EXISTING UTILITIES SHOWN ON PLANS ARE TO BE VERIFIED HORIZONTALLY AND VERTICALLY PRIOR TO ANY CONSTRUCTION. ALL EXISTING FEATURES INCLUDING BURIED UTILITIES ARE SHOWN AS INDICATED ON RECORD MAPS AND SURVEYS FURNISHED BY OTHERS. WE ASSUME NO LIABILITY FOR THE ACCURACY OF THOSE RECORDS AND SURVEYS, FOR THE FINAL LOCATION OF EXISTING UTILITIES IN AREAS CRITICAL TO CONSTRUCTION CONTACT THE UTILITY OWNER/AGENCY.

GRAPHIC SCALE
50 0 25 50
(IN FEET)
1 inch = 50 ft.

UNDERGROUND SERVICE ALERT
ONE-CALL NUMBER
(800)424-5555
CALL TWO BUSINESS DAYS BEFORE YOU DIG

No.	DATE	BY
4		
3		
2		
1		

CONSULTANTS:
DCI ENGINEERS
D'AMATO CONVERSANO INC.
421 W RIVERSIDE, SUITE 668 PHONE (509)624-1848
SPOKANE, WASHINGTON 99201 FAX: (509)455-7482
CIVIL / STRUCTURAL

ZCB[a]
ZECK BUTLER ARCHITECTS PS
The Pavilion Center 421 W Riverside Suite 220 Spokane WA 99201 t 509 . 456 . 8235 f 509 . 747 . 0370
www.zeckbutler.com

SHEET TITLE: GRADING PLAN
PROJECT TITLE: QUINCY SHOPS
GRANT COUNTY PUBLIC WORKS
EPHRATA, WASHINGTON

SEAL: STATE OF WASHINGTON, DAVID A. SCHMIDT, 18411, REGISTERED PROFESSIONAL ENGINEER
EXPIRES 9/27/2004

DATE	07-12-04
DRAWN	JFC
CHECKED	DAS
PROJECT NUMBER	04-42-029
DRAWING NO.	C2.0

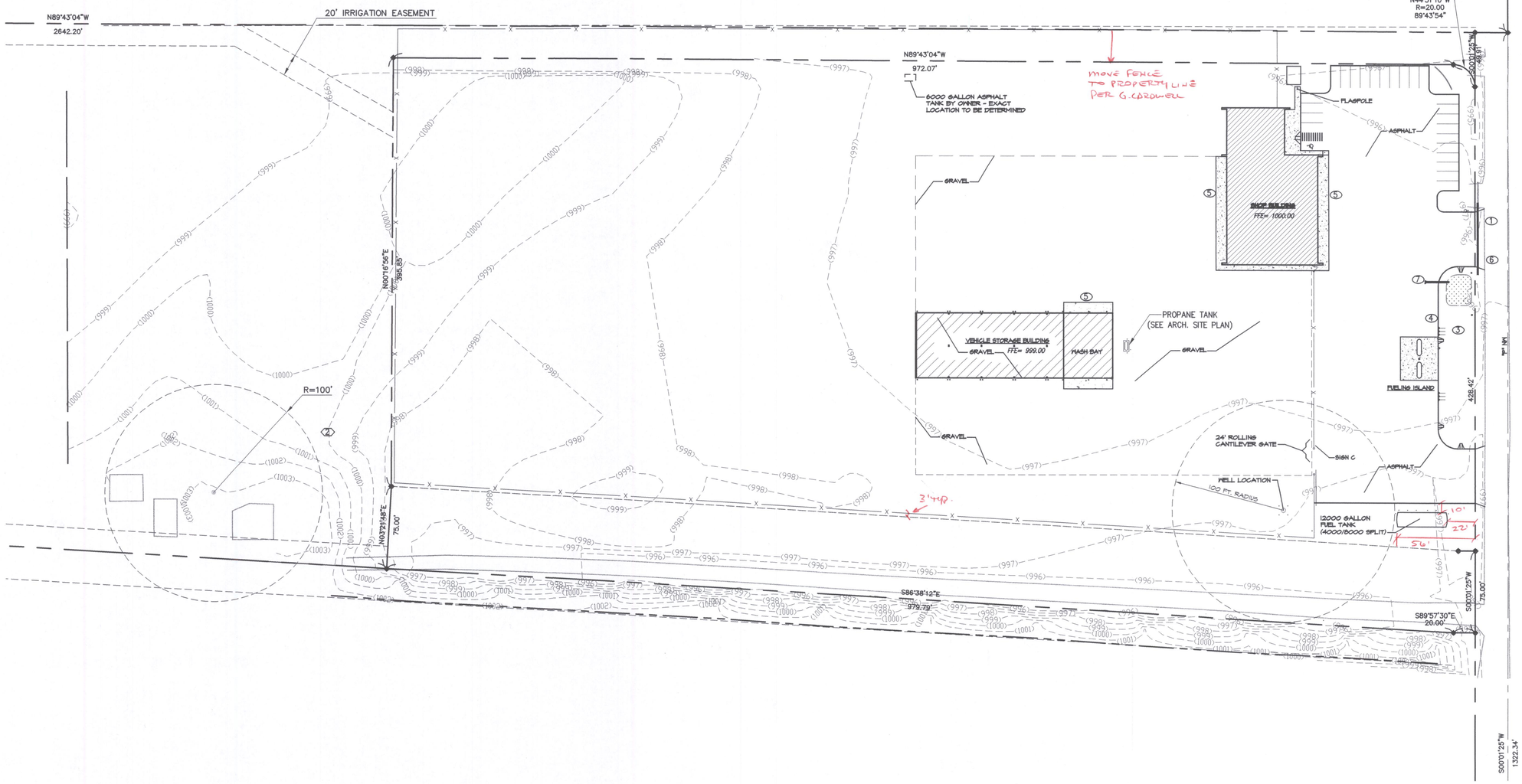

STORM DRAINAGE NOTES:

1. CATCH BASIN CONNECTIONS, INLET CONNECTIONS, AND SERVICE DRAINS SHALL BE 10" DIAMETER PVC PIPE.
2. TEES, CATCH BASIN CONNECTIONS, SIDE SEWERS, SERVICE DRAINS, AND INLET CONNECTIONS SHALL BE PLACED AT A MINIMUM SLOPE OF 0.5%.
3. SERVICE DRAINS AND SIDE SEWERS SHALL BE CONNECTED OR RECONNECTED IN ACCORDANCE WITH THE STANDARD SPECIFICATIONS.
4. AREA STRUCTURES, CATCH BASINS, ETC. ARE DESIGNED FOR AGENCY REVIEW PURPOSES. PLUMBER OR MECHANICAL ENGINEER SHALL VERIFY ACTUAL SIZES AND LOCATIONS. THEREFORE, FINAL FIELD DESIGN MAY DIFFER FROM WHAT IS SHOWN ON THE PLANS.

REFERENCE NOTES:

1. INSTALL 12" CULVERT PIPES UNDER THE DRIVE APPROACHES PER DETAIL 7/C6.0.
2. SEE MECHANICAL PLANS FOR INTERIOR TRENCH DRAINS, AND C4.0 FOR CONNECTION TO DRAINAGE PIPE.
3. SEE ARCHITECTURAL PLANS FOR LANDSCAPING AND SIGNAGE.
4. SLOPE LANDSCAPED AREA SO RUNOFF DRAINS TO BORROW DITCH.
5. SEE UTILITY PLAN C4.0 FOR DOWNSPOUTS AND OIL/WATER SEPARATOR PIPING AND INVERT ELEVATIONS.
6. CONTRACTOR TO LOWER CULVERT TO PROVIDE OVERFLOW FROM SMALL DRAINAGE POND TO THE NORTH, AS IT IS CURRENTLY. SEE DETAIL 2/C6.0.
7. SEE UTILITY PLAN FOR THE DRAINAGE FROM THE OIL/WATER SEPARATOR AND DOWNSPOUTS.

CONTRACTOR NOTE

ALL EXISTING UTILITIES SHOWN ON PLANS ARE TO BE VERIFIED HORIZONTALLY AND VERTICALLY PRIOR TO ANY CONSTRUCTION. ALL EXISTING FEATURES INCLUDING BURIED UTILITIES ARE SHOWN AS INDICATED ON RECORD MAPS AND SURVEYS FURNISHED BY OTHERS. WE ASSUME NO LIABILITY FOR THE ACCURACY OF THOSE RECORDS AND SURVEYS, FOR THE FINAL LOCATION OF EXISTING UTILITIES IN AREAS CRITICAL TO CONSTRUCTION CONTACT THE UTILITY OWNER/AGENCY.

N

GRAPHIC SCALE

50 0 25 50

(IN FEET)
1 inch = 50 ft.

UNDERGROUND SERVICE ALERT
ONE-CALL NUMBER
(800)424-5555
CALL TWO BUSINESS DAYS BEFORE YOU DIG

No.	DATE	BY
4		
3		
2		
1		

CONSULTANTS:

DCI ENGINEERS
D'AMATO CONVERSANO INC.
421 WEST RIVERSIDE - SUITE 606 PHONE: (509)455-4448
SPOKANE, WASHINGTON 99201 FAX: (509)455-7492
CIVIL / STRUCTURAL

ZECK BUTLER ARCHITECTS PS

ZB

The Trudeen Center 421 W Riverside Suite 220 Spokane WA 99201 t 509 . 456 . 8236 f 509 . 747 . 0570
e www.zeckbutler.com

SHEET TITLE: STORM DRAINAGE PLAN

PROJECT TITLE: QUINCY SHOPS
GRANT COUNTY, PUBLIC WORKS
EPHRATA, WASHINGTON

SEAL: STATE OF WASHINGTON, DENNIS A. SCHMIDT, REGISTERED PROFESSIONAL ENGINEER
EXPIRES 9/27/2004

DATE	07-12-04
DRAWN	JPC
CHECKED	DAS
PROJECT NUMBER	04-42-029
DRAWING NO.	C3.0

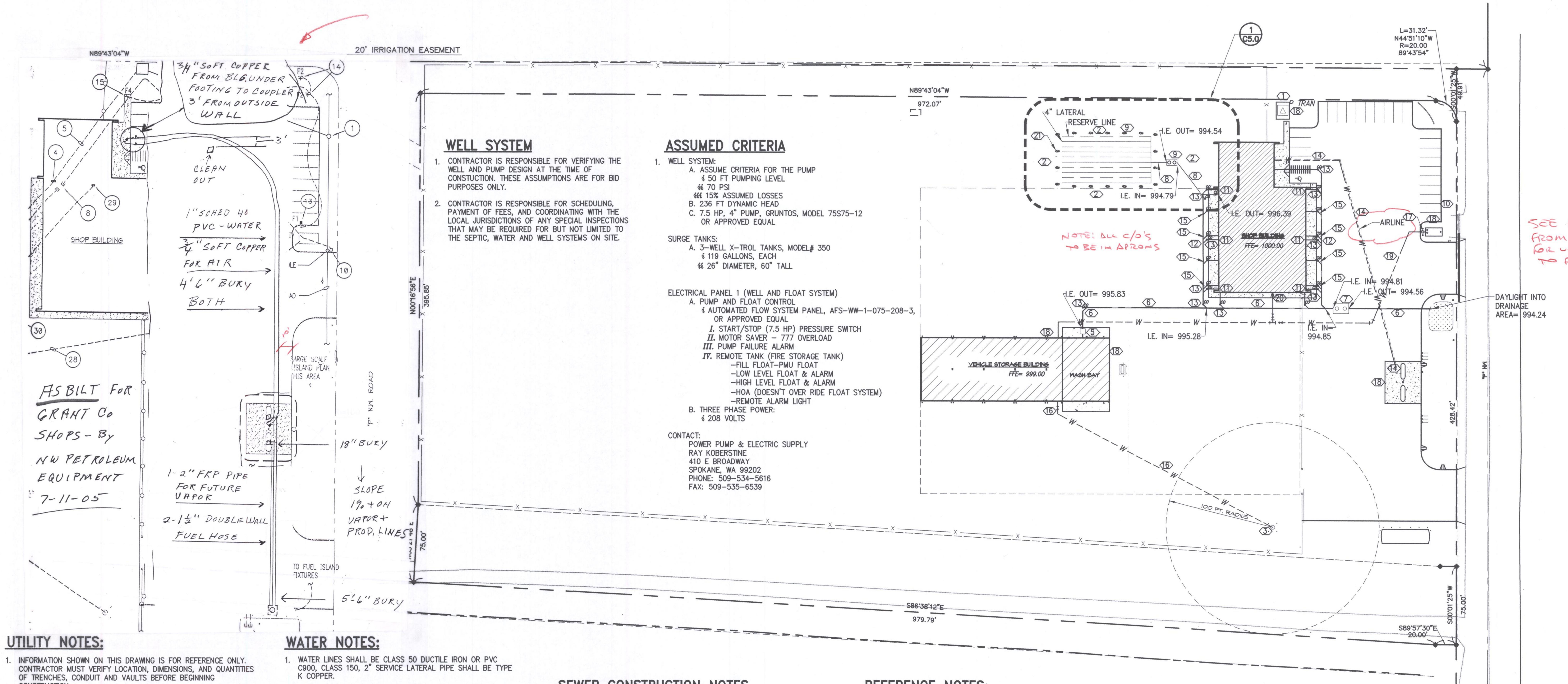

WELL SYSTEM

1. CONTRACTOR IS RESPONSIBLE FOR VERIFYING THE WELL AND PUMP DESIGN AT THE TIME OF CONSTUCTION. THESE ASSUMPTIONS ARE FOR BID PURPOSES ONLY.
2. CONTRACTOR IS RESPONSIBLE FOR SCHEDULING, PAYMENT OF FEES, AND COORDINATING WITH THE LOCAL JURISDICTIONS OF ANY SPECIAL INSPECTIONS THAT MAY BE REQUIRED FOR BUT NOT LIMITED TO THE SEPTIC, WATER AND WELL SYSTEMS ON SITE.

ASSUMED CRITERIA

1. WELL SYSTEM:
   A. ASSUME CRITERIA FOR THE PUMP
      i 50 FT PUMPING LEVEL
      ii 70 PSI
      iii 15% ASSUMED LOSSES
   B. 236 FT DYNAMIC HEAD
   C. 7.5 HP, 4" PUMP, GRUNTOS, MODEL 75S75-12 OR APPROVED EQUAL

SURGE TANKS:
   A. 3-WELL X-TROL TANKS, MODEL# 350
      i 119 GALLONS, EACH
      ii 26" DIAMETER, 60" TALL

ELECTRICAL PANEL 1 (WELL AND FLOAT SYSTEM)
   A. PUMP AND FLOAT CONTROL
      i AUTOMATED FLOW SYSTEM PANEL, AFS-WW-1-075-208-3, OR APPROVED EQUAL
         I. START/STOP (7.5 HP) PRESSURE SWITCH
         II. MOTOR SAVER – 777 OVERLOAD
         III. PUMP FAILURE ALARM
         IV. REMOTE TANK (FIRE STORAGE TANK)
            –FILL FLOAT–PMU FLOAT
            –LOW LEVEL FLOAT & ALARM
            –HIGH LEVEL FLOAT & ALARM
            –HOA (DOESN'T OVER RIDE FLOAT SYSTEM)
            –REMOTE ALARM LIGHT
   B. THREE PHASE POWER:
      i 208 VOLTS

CONTACT:
POWER PUMP & ELECTRIC SUPPLY
RAY KOBERSTINE
410 E BROADWAY
SPOKANE, WA 99202
PHONE: 509-534-5616
FAX: 509-535-6539

UTILITY NOTES:

1. INFORMATION SHOWN ON THIS DRAWING IS FOR REFERENCE ONLY. CONTRACTOR MUST VERIFY LOCATION, DIMENSIONS, AND QUANTITIES OF TRENCHES, CONDUIT AND VAULTS BEFORE BEGINNING CONSTRUCTION.
2. IF REQ'D PROVIDE TRENCH EXCAVATION, BEDDING, AND BACKFILL FOR CONDUIT OF UTILITIES. PROVIDE MIN. 48 HOURS NOTICE TO UTILITY COMPANIES PRIOR TO CONSTRUCTION. CALL 1-800-424-5555
3. CONTRACTOR SHALL CONFORM TO STATE SAFETY REGULATIONS.
4. ALL ROADWAY CROSSINGS SHALL BE A MIN. SCH. 80 CONDUIT. CONTRACTOR SHALL COORDINATE ACTUAL SIZE WITH ALL UTILITY COMPANIES.
5. SEWER SERVICES SHALL BE STAKED WITH A DEPTH-MARKED WOODEN STAKE LABELED "SEWER".
6. SANITARY SEWER SERVICES SHALL BE 10' MINIMUM DISTANCE FROM WATER SERVICES.
7. COVER FOR WATER MAIN AND SERVICE LINES SHALL BE 4-½' MINIMUM.
8. WATER SERVICE STUBS SHALL BE STAKED WITH A DEPTH MARKED WOODEN STAKE LABELED "WATER SERVICE."
9. PROVIDE THRUST ANCHORS AT BENDS AND TEES ON ALL WATER LINES.
10. PROVIDE #9 SOLID GALVANIZED STEEL TRACER WIRE ON ALL PVC PIPE. LOCATE 12" BELOW FINISHED GRADE.
11. PROVIDE 4" WIDE IDENTIFYING TAPE ABOVE ALL MAINS AND SERVICES. LOCATE TAPE 12" BELOW FINISH GRADE.
12. CONTRACTOR SHALL PROVIDE ALL GRADES. PROPERTY CORNER LOCATIONS OR OTHER REFERENCE POINTS TO DETERMINE LOCATIONS AND DEPTH OF GAS, POWER, AND TELEPHONE UTILITIES AND FACILITIES.
13. THE SEWER MUST BE A MINIMUM OF 18" DEEPER AND A MINIMUM OF 5' HORIZONTALLY FROM THE CENTER OF THE WATER SERVICE. WHEN THE ELEVATION IS HIGHER THAN THE WATER SERVICE, THERE MUST A SEPARATE WATER TRENCH WITH 6 FEET OF UNDISTURBED EARTH BETWEEN WATER AND SEWER. ALL WATER SERVICE INSTALLATIONS SHALL BE AT LEAST 10 FEET FROM ANY CESSPOOL, CATCHBASIN, AND SEPTIC TANK.

WATER NOTES:

1. WATER LINES SHALL BE CLASS 50 DUCTILE IRON OR PVC C900, CLASS 150, 2" SERVICE LATERAL PIPE SHALL BE TYPE K COPPER.
2. WATERLINES SHALL BE INSTALLED AT A MINIMUM DEPTH OF 4-½ FEET TO THE FINISHED GRADE, UNLESS OTHERWISE NOTED. PROVIDE TRENCHING AND BEDDING PER WSDOT 2004 STANDARD SPECIFICATIONS.
3. GATE VALVES SHALL MEET THE REQUIREMENTS OF AWWA C509, RESILENT SEATED WITH 2" SQUARE NON-RISING OPERATOR NUT. VALVE BODY SHALL BE EPOXY COATED INSIDE AND OUT. GATE VALVES SHALL BE PROVIDED FOR ALL VALVES AND SHALL BE TYPE NO. 6855. PER WSDOT 2004.
4. ALL WATER MAINS SHALL BE STAKED FOR GRADES AND ALIGNMENT BY AN ENGINEERING OR SURVEYING FIRM CAPABLE OF PERFORMING SUCH WORK.
5. WHERE CONNECTIONS REQUIRED "FIELD VERIFICATION," CONNECTION POINTS WILL BE EXPOSED BY CONTRACTOR AND FITTINGS VERIFIED 48 HOURS PRIOR TO DISTRIBUTION SHUT-DOWN NOTICES.
6. AT ANY CONNECTION TO AN EXISTING LINE WHERE A NEW VALVE IS NOT INSTALLED, THE EXISTING VALVE MUST BE PRESSURE TESTED PRIOR TO CONNECTION. IF AN EXISTING VALVE FAILS TO PASS THE TEST, THE CONTRACTOR SHALL MAKE THE NECESSARY PROVISIONS TO TEST THE NEW LINE PRIOR TO CONNECTION TO THE EXISTING SYSTEM OR INSTALL NEW VALVE.
7. BEFORE THE WATER LINES ARE CONSTRUCTED THE OWNER SHALL APPLY FOR A WATER METER AND PAY ALL METER AND TAP FEES.
8. DEFLECTIONS AT PIPE JOINTS SHALL NOT EXCEED 75% OF MAXIMUM ALLOWED DEFLECTION, PER MANUFACTURER'S RECOMMENDATIONS.
9. CONTRACTOR SHALL MAKE CONNECTIONS AND DISCONNECTIONS TO EXISTING WATER MAINS AND PROVIDE PIPING MATERIAL TO THE PROPERTY LINE. CONTRACTOR SHALL PROVIDE ALL OTHER MATERIALS AND PAY ALL FEES AND INSTALL FROM PROPERTY LINE THROUGH REDUCED PRESSURE BACKFLOW ASSEMBLY. CONTRACTOR SHALL FURNISH ALL EXCAVATION AND BACKFILL.
10. PIPE RESTRAINMENT SHALL BE INSTALLED AT ALL BENDS (VERTICAL AND HORIZONTAL), TEES, CROSSES, PLUGS, AND VALVES. THE RESTRAINMENT SHALL BE IN THE FORM OF ACCEPTABLE MANUFACTURED RESTRAINT JOINTS ARE RESTAINED.
11. LOCATION OF EXISTING WATER MAINS AND SERVICES SHOWN ARE APPROXIMATE ONLY BASED ON INFORMATION PROVIDED BY OTHERS; CONTRACTOR TO VERIFY ALL LOCATIONS PRIOR TO CONSTRUCTION.
12. NEW WATER LINES SHALL BE TESTED AT NO LESS THAN 175 PSI FOR MINIMUM OF THREE (3) HOURS.
13. DISINFECTION OF WATER MAINS SHALL BE PERFORMED UNDER THE WSDOT STANDARD SPECIFICATIONS.

SEWER CONSTRUCTION NOTES

1. ALL SEWER CONSTRUCTION PROCEDURES AND MATERIALS SHALL BE IN ACCORDANCE WITH THE LOCAL HEALTH DISTRICTS STANDARD CONSTRUCTION SPECIFICATIONS.
2. ALL SIDE SEWER LINES SHALL BE 6" UNLESS OTHERWISE INDICATED ON PLANS.
3. ALL SEWER AND WATER LINES SHALL BE LOCATED TO MEET STATE SEPARATION REQUIREMENTS. MAINTAIN 10' MINIMUM SEPARATION.
4. ALL SIDE SEWERS WHICH THE CONTRACTOR IS UNABLE TO MAINTAIN A MINIMUM OF 18" COVER AT WATER MAIN CROSSINGS OR WHICH THE SIDE SEWER MUST CROSS ABOVE THE WATER, THE CONTRACTOR SHALL SLEEVE THE SIDE SEWER WITH CONTINUOUS 20' SECTION OF P.V.C. SEWER PIPE CENTERED ON THE CROSSING.
5. SANITARY SEWER PIPE SHALL BE PVC ASTM D 3034, SDR 35 OR ASTM F 789 WITH PUSH-ON JOINTS AND RUBBER GASKETS CONFORMING TO ASTM D 3212 AND ASTM F 477. PROVIDE TRENCHING AND BEDDING PER WSDOT STANDARD SPECIFICATIONS.
6. ALL SEWER MAINS SHALL BE FIELD STAKED FOR GRADES AND ALIGNMENT BY A LICENSED ENGINEERING OR SURVEYING FIRM QUALIFIED TO PERFORM SUCH WORK.
7. THE GRANT OUNTY BOARD OF HEALTH REGARDING "ON SITE SEWAGE" TREATMENT OR DISPOSAL REQUIRES CONSTRUCTION INSPECTION AND OPERATIONAL TESTING PRIOR TO DRAINFIELD BEING BACKFILLED.
8. INSTALLATION SHALL BE COMPLETED ONLY BY A CERTIFIED INSTALLER LICENSED BY THE GRANT COUNTY BOARD OF HEALTH.

REFERENCE NOTES:

1. CONTRACTOR TO COORDINATE WITH THE GAS, TELEPHONE, AND CABLE PURVEYOR'S FOR EXTENSION TO THE BUILDINGS.
2. DRAIN FIELD AREA IS REQUIRED TO BE POSTED FOR "NO VEHICLE TRAFFIC".
3. WELL TO BE DRILLED BY CONTRACTOR. 6" CASTING PIPE AND TEMPORARY CAP. PUMP TO BE DESIGNED AND SPECIFIED BY CONTRACTOR. WELL CANNOT EXCEED 5000 GAL/DAY BASED ON DOE REGULATIONS.
4. 2" DUCTILE IRON DOMESTIC WATERLINE TO THE BUILDING. CONNECTION TO BE MADE BY OTHERS. SEE MECHANICAL PLANS FOR INTERIOR WATER LOCATION.
5. SEE MECHANICAL PLANS FOR SAND TRAP CATCH BASIN.
6. INSTALL 362 LF 8" SDR35 PVC @ 0.4% MIN. SLOPE DRAIN LINE FROM WASHBAY AND SHOP BUILDING TO OIL/WATER SEPARATOR TO DRAINAGE AREA.
7. INSTALL 1500 GAL., WILBERT PRECAST, INC. PRODUCT # 16340W WITH A H20 LID 1634T, OR APPROVED EQUAL.
8. INSTALL 6" SDR35 PVC SEWER LINE @ MIN. 2% GRADE.
9. SEE DETAILS 1/C5.0, 2/C5.0, 3/C5.0, AND 2/C5.1 FOR SEPTIC SYSTEM.
10. INSTALL FIRE RESERVE TANK PER DETAIL 1/C5.1.
11. I.E. OUT= 996.39
    INSTALL 6" SDR35 PVC AT A MIN. 2% SLOPE. CONNECT TO 8" SDR35 PVC.
12. CONTRACTOR TO VERIFY LOCATION OF POWER, TELEPHONE, AND CABLE.
13. INSTALL CLEANOUTS PER DETAIL 3/C6.0.
14. INSTALL 3/4" D.I. WATERLINE AND AIRLINE TO FUEL ISLAND. SEE MECHANICAL FOR INTERIOR CONNECTION TO THE BUILDING AND DETAIL OF THE FUEL ISLAND.
15. CONNECT 4" SDR35 PVC @ A MINIMUM 2% SLOPE FROM TRENCH DRAIN OUTLET TO 8" LINE. OUTLET ELEVATION= 998.69 VERIFY WITH MECHANICAL PLANS.
16. 1" WATERLINE TO THE PRESSURE WASHING BAY. SEE MECHANICAL FOR CONNECTION INTO THE BUILDING.
17. INSTALL DOUBLE CHECK VALVE ASSEMBLY PER DETAIL 4/C6.0.
18. SEE ELECTRICAL PLANS FOR THE ELECTRICAL SERVICE TO THE WELL, FIRE RESERVE TANK, AND THE FUEL ISLAND.
19. INSTALL 2" DUCTILE IRON WATERLINE TO THE FIRE RESERVE TANK.
20. ~~INSTALL 2" WATER METER AT THE BUILDING.~~
21. PROVIDE AND PLACE APPROX. 3' BOULDERS AROUND DRAINFIELD AT 12' TO16' O.C. (TYP 15 TO 20 EA).

CONTRACTOR NOTE

ALL EXISTING UTILITIES SHOWN ON PLANS ARE TO BE VERIFIED HORIZONTALLY AND VERTICALLY PRIOR TO ANY CONSTRUCTION. ALL EXISTING FEATURES INCLUDING BURIED UTILITIES ARE SHOWN AS INDICATED ON RECORD MAPS AND SURVEYS FURNISHED BY OTHERS. WE ASSUME NO LIABILITY FOR THE ACCURACY OF THOSE RECORDS AND SURVEYS, FOR THE FINAL LOCATION OF EXISTING UTILITIES IN AREAS CRITICAL TO CONSTRUCTION CONTACT THE UTILITY OWNER/AGENCY.

GRAPHIC SCALE
50 0 25 50
(IN FEET)
1 inch = 50 ft.

UNDERGROUND SERVICE ALERT
ONE-CALL NUMBER
(800)424-5555
CALL TWO BUSINESS DAYS BEFORE YOU DIG

No.	DATE	BY
4		
3		
2		
1		

CONSULTANTS:

DCI ENGINEERS
D'AMATO CONVERSANO INC.
421 WEST RIVERSIDE · SUITE 606 SPOKANE, WASHINGTON 99201
PHONE: (509)455-4448 FAX: (509)455-7492
CIVIL / STRUCTURAL

ZECK BUTLER ARCHITECTS PS
The Paulsen Center 421 W Riverside Suite 220 Spokane WA 99201 t 509 . 456 . 8236 f 509 . 747 . 0570
e www.zeckbutler.com

SHEET TITLE: UTILITY PLAN

PROJECT TITLE: QUINCY SHOPS
GRANT COUNTY PUBLIC WORKS
EPHRATA, WASHINGTON

SEAL: DAMON A. SMITH, STATE OF WASHINGTON, 0028632, REGISTERED PROFESSIONAL ENGINEER, 9-15-04
EXPIRES 9/27/2004

DATE	07-12-04
DRAWN	JPC
CHECKED	DAS
PROJECT NUMBER	04-42-029
DRAWING NO.	C4.0

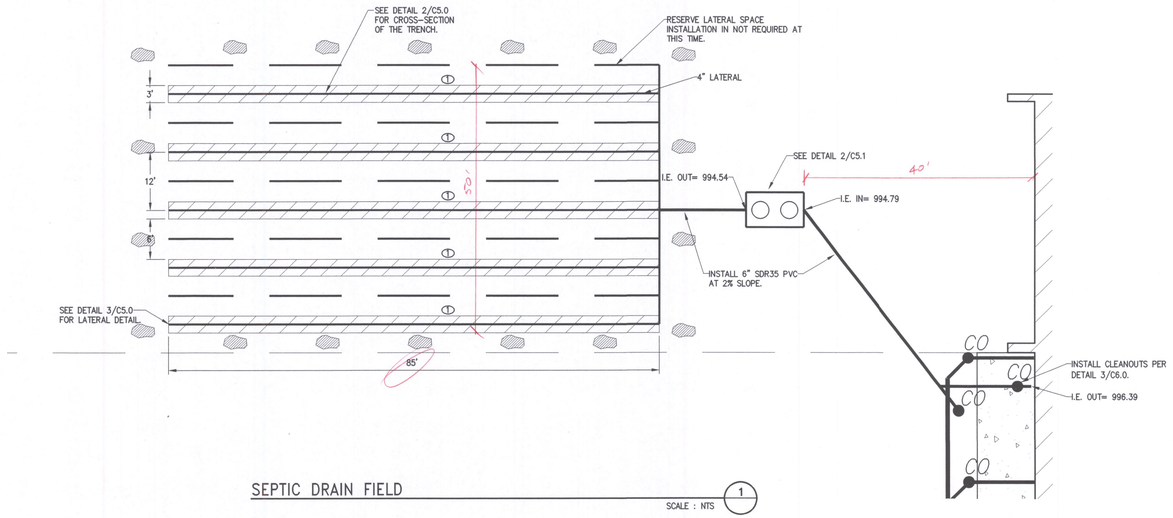

SEPTIC DRAIN FIELD

SCALE : NTS (1)

DRAINFIELD NOTES

1. INSTALLATION OF SEPTIC SYSTEM SHALL BE PER RULES AND REGULATIONS OF THE GRANT COUNTY BOARD OF HEALTH REGARDING "ON-SITE SEWAGE" TREATMENT OR DISPOSAL.
2. GEOTEXTILE FABRIC SHALL BE PLACED ON TOP OF THE FINAL GRAVEL LAYER COVERING THE DISPERSAL PIPE. SAID MATERIALS SHALL COVER THE FULL WIDTH OF THE TRENCH OR BED.
3. WASHED GRAVEL CONSISTING OF ROCKS 1/2 TO 2-1/2 INCHES IN DIAMETER SHALL BE INSTALLED IN ALL DISPERSAL TRENCHES OR BEDS, AS SHOWN.
4. ALL ROUGH GRADING OF THE PROPERTY WHICH MIGHT AFFECT THE ON SITE SEPTIC SYSTEM AREA SHALL BE PERFORMED PRIOR TO THE INSTALLATION OF THE DISPOSAL SYSTEM.
5. THE HEALTH OFFICER MAY REQUIRE THE USE OF VELOCITY RESTRICTION DEVICES, LIKE TEE'S, DOUBLE BENDS, DISTRIBUTION BOXES, JUST PRIOR TO THE ENTRY OF THE EFFLUENT INTO THE DRAINFIELD WHEN SURGE LOADING, PRESSURE LOADING, ETC., ARE USED.
6. THE SEPTIC SYSTEM DESIGN IS BASED ON AN OFFICE BUILDING, TOTALING 1084 GPD OF DISCHARGE. BASED ON THE QUANTITIES PROVIDED BY THE GRANT COUNTY BOARD OF HEALTH, A 1000 GALLON SEPTIC TANK AND TRADITIONAL GRAVITY SYSTEM OF OF DRAINFIELD WITH EQUAL RESERVE IS REQUIRED.
7. CONTRACTOR IS RESPONSIBLE AND SHALL PROVIDE PROTECTION FOR THE SEPTIC TANK, TRANSPORTLINE, AND DRAINFIELD DURING THE ENTIRE CONSTRUCTION PROCESS. THE CONTRACTOR WILL BE RESPONSIBLE FOR REPLACING ANY DAMAGE TO THE SYSTEM.

REFERENCE NOTES:

(1) INSTALL 4"ø PVC DISPERSAL PIPE. 2 ROWS OF 1/2"ø HOLES SPACED SO THAT THE CENTER IS 60" FROM THE BOTTOM CENTERLINE. HOLES SHALL BE SPACED A MAX. OF 5 INCHES FROM CENTER TO CENTER. SEE DETAIL 2 AND 3, THIS SHEET.

GRANT COUNTY BOARD OF HEALTH APPROVED FOR CONSTRUCTION:

SIGNATURE DATE

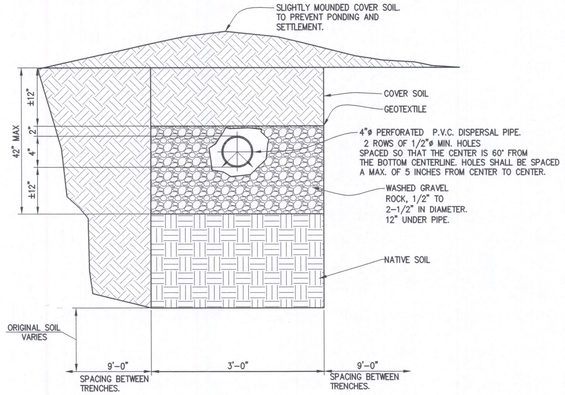

SEPTIC DRAINFIELD TRENCH DETAIL

SCALE : NTS (2)

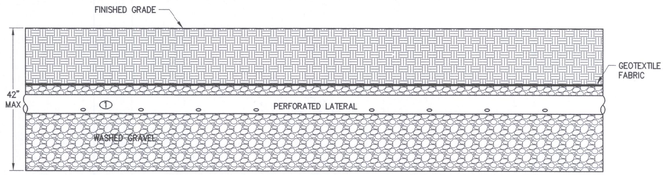

LATERAL VIEW

SCALE : NTS (3)

CONTRACTOR NOTE

ALL EXISTING UTILITIES SHOWN ON PLANS ARE TO BE VERIFIED HORIZONTALLY AND VERTICALLY PRIOR TO ANY CONSTRUCTION. ALL EXISTING FEATURES INCLUDING BURIED UTILITIES ARE SHOWN AS INDICATED ON RECORD MAPS AND SURVEYS FURNISHED BY OTHERS. WE ASSUME NO LIABILITY FOR THE ACCURACY OF THOSE RECORDS AND SURVEYS, FOR THE FINAL LOCATION OF EXISTING UTILITIES IN AREAS CRITICAL TO CONSTRUCTION CONTACT THE UTILITY OWNER/AGENCY.

UNDERGROUND SERVICE ALERT
ONE-CALL NUMBER
(800)424-5555
CALL TWO BUSINESS DAYS BEFORE YOU DIG

No.	DATE	BY
4		
3		
2		
1		

CONSULTANTS:

DCI ENGINEERS
D'AMATO CONVERSANO INC.
421 W RIVERSIDE AVE, SUITE 900 PHONE: (509)455-9348
SPOKANE, WASHINGTON 99201 FAX: (509)455-7402
CIVIL / STRUCTURAL

ZECK BUTLER ARCHITECTS PS
The Podium Center 421 W Riverside Suite 225 Spokane WA 99201 t 509 . 456 . 8235 f 509 . 747 . 0570
e www.zeckbutler.com

SHEET TITLE: ON-SITE SEWER

PROJECT TITLE: QUINCY SHOPS
GRANT COUNTY PUBLIC WORKS
EPHRATA, WASHINGTON

SEAL: STATE OF WASHINGTON, DAVID A. SCHUMACHER, STATE OF WASHINGTON, REGISTERED PROFESSIONAL ENGINEER, EXPIRES 9/27/2004

DATE	07-12-04
DRAWN	JPC
CHECKED	DAS
PROJECT NUMBER	04-42-029
DRAWING NO.	C5.0

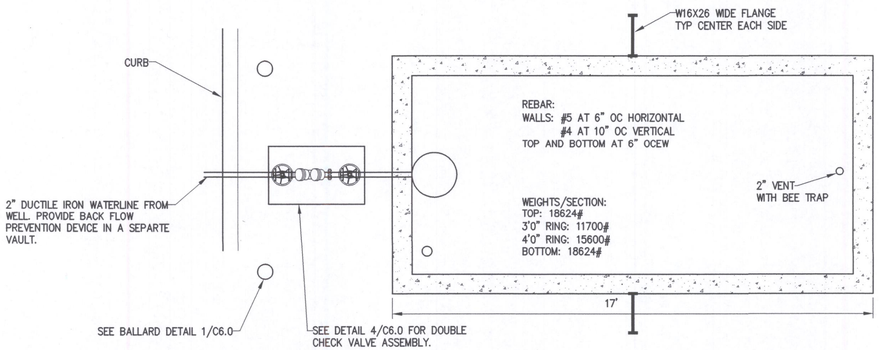

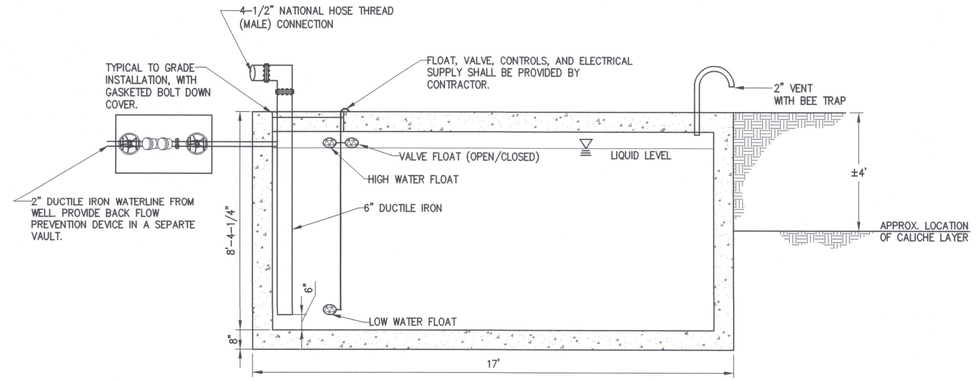

NOTES:

BUTYL TAPE AT JOINTS

ALTERNATE HALLIDAY ALUMINUM HATCH IN LIEU OF FIBERGLASS RISER/COVER. SIZED AS REQUIRED.

1077 GALLON/VERTICAL FOOT CAPACITY.

4"-6" PVC COUPLING OR KOR-N-SEAL BOOT AT INLET/PUTLET LOCATED PER REQUEST.

TANKS CAN BE COUPLED IN SERIES TO INCREASE TOTAL CAPACITY.

ALTERNATE DESIGN AVAILABLE FOR TRAFFIC BEARING AND SUBSURFACE WATER CONDITIONS.

THICKNESS OF BUTYL TAPE IS ACCOUNTED FOR AS 1/4" PER JOINT ASTM C990.

"H2" PRECAST

THE DESIGN OF THE TANK IS PER WILBERT PRECAST, INC. PRODUCT NUMBER 916-75, 7500 GALLON WATER TANK, NON-TRAFFIC BEARING, WITH NO SUBSURFACE WATER PRESENT, OR APPROVED EQUAL.

MAXIMUM FLOW RATE:
CANNOT EXCEED 5000 GAL. PER DAY FROM WELL. BASED ON CRITERIA IT WILL TAKE 29 HOURS TO FILL THE TANK.

WATER TANK (FIRE STORAGE)

SCALE : NTS (1)

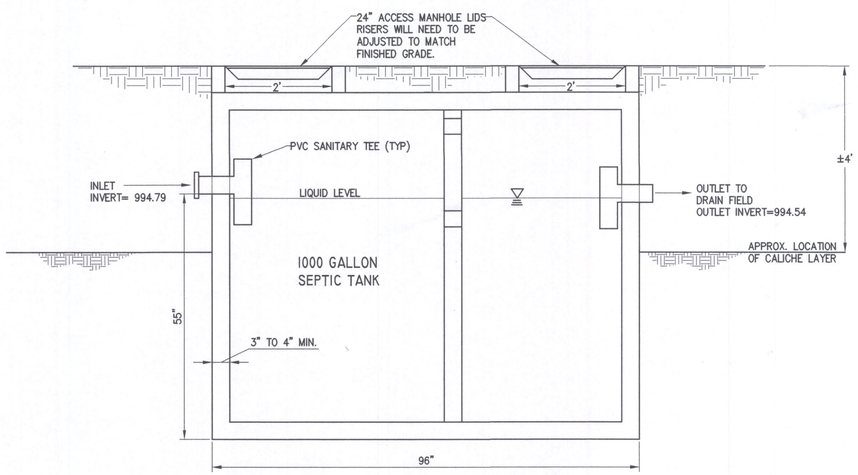

TYPICAL SEPTIC TANK/ PUMP CHAMBER

USE -DOUBLE COMPARTMENT CONCRETE SEPTIC TANK WILBERT PRECAST INC.
PRODUCT 1627 OR EQUIVALENT.

NOTES:

SEPTIC TANK SHALL BE MADE OF CONCRETE AND SHALL BE SEALED TO PROVIDE A WATERTIGHT CONTAINER.

SEPTIC TANK SHALL BE INSTALLED ON A LEVEL GRADE IN UNDISTURBED SOILS. CARE SHALL BE TAKEN TO REMOVE ANY ROCKS BEFORE SETTING THE SEPTIC TANK AND PUMPING CHAMBER.

SEPTIC TANK COMPONENTS SHALL MEET THE REQUIREMENTS OF THE HEALTH OFFICER.
A LIST OF APPROVED MANUFACTURERS AND DISTRIBUTORS MAY BE OBTAINED FROM THE HEALTH OFFICER.

SEPTIC TANK SHALL BE PLACED TO PROVIDE THE REQUIRED COVER AND ADEQUATE GRAVITY FLOW FROM THE OFFICE TO THE TANK.

CARE SHALL BE TAKEN TO PLACE SEPTIC TANK IN A LOCATION WHICH WILL PROVIDE EASY ACCESS FOR FUTURE SERVICE.

MINIMUM HORIZONTAL SEPARATION DISTANCES FROM WELLS, BUILDING FOUNDATIONS, DRIVEWAYS, ROADS, PROPERTY LINES, TREES, ETC., SHALL BE MAINTAINED AS REQUIRED ON TABLE III OF SCHD'S "RULES AND REGULATIONS OF ON-SITE SEWAGE SYSTEMS".

GENERAL NOTES:

ALL WORK SHALL BE IN ACCORDANCE WITH THE SPOKANE REGIONAL HEALTH DISTRICT "ON-SITE SEWAGE SYSTEMS" AS REVISED DECEMBER 1996.

DRAINAGE FROM SURFACE, FOOTING DRAINS AND ROOF DRAINS AND OTHER NON-SEWAGE DRAINS SHALL BE PREVENTED FROM ENTERING THE ON-SITE SEWAGE SYSTEM (O.S.S.) AND THE AREA WHERE THE O.S.S. IS LOCATED.

ALL CONSTRUCTION SHALL BE APPROVED BY THE HEALTH OFFICER HOWEVER, INSPECTED BY THE DESIGN ENGINEER.

PIPE CONNECTIONS SHOWN ARE GENERAL IN NATURE. THE CONTRACTOR SHALL VERIFY NECESSARY CONNECTIONS AND FIELD FIT AS REQUIRED. NO ATTEMPT HAS BEEN MADE TO QUANTIFY AND SPECIFY THE EXACT NUMBER OF FITTINGS REQUIRED.

UTILITY LOCATIONS SHOWN ARE APPROXIMATE. THE CONTRACTOR SHALL FIELD VERIFY EXACT LOCATION OF ALL UTILITIES.

SEPTIC SYSTEM

SCALE : NTS (2)

No.	DATE	BY
4		
3		
2		
1		

CONSULTANTS:

DCI ENGINEERS
DAN A. CONTERNO & ASSOCIATES, INC.
621 W. ALTA AVE., SUITE 606 PHONE: (509)459-7446
SPOKANE, WASHINGTON 99201 FAX: (509)459-7492
CIVIL / STRUCTURAL

ZECK BUTLER ARCHITECTS PS

The Pavilion Center 421 W Riverside Suite 220 Spokane WA 99201 t 509 . 456 . 8236 f 509 . 747 . 0570
e www.zeckbutler.com

SHEET TITLE: DETAILS

PROJECT TITLE: QUINCY SHOPS
GRANT COUNTY PUBLIC WORKS
EPHRATA, WASHINGTON

SEAL: DAN A. CONTERNO, STATE OF WASHINGTON, REGISTERED PROFESSIONAL ENGINEER, 14444
EXPIRES 9/27/2004

DATE	07-12-04
DRAWN	JPC
CHECKED	DAS
PROJECT NUMBER	04-42-029
DRAWING NO.	C5.1

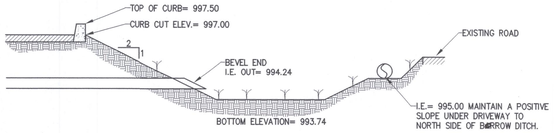

DRAINAGE POND WITH OVERFLOW (2)

SCALE : NTS

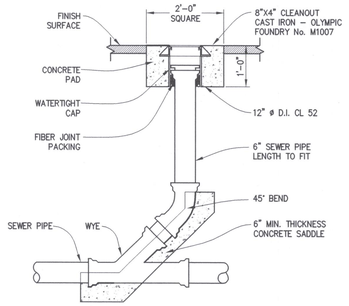

TYPICAL CLEANOUT (3)

SCALE : NTS

XX (1)

SCALE : NTS

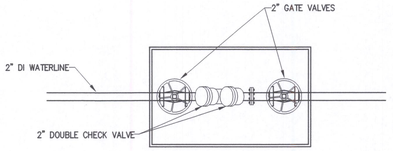

DOUBLE CHECK VALVE (4)

SCALE : NTS

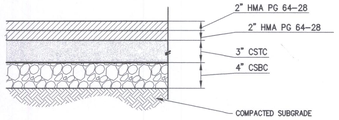

HEAVY DUTY ASPHALT PAVEMENT SECTION (5)

SCALE : NTS

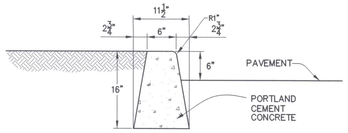

TYPE "E" CURB (6)

SCALE : NTS

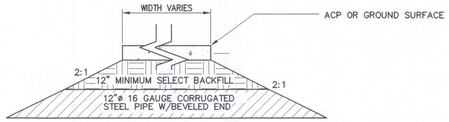

NOTES:

USE ONLY CLASS I AND CLASS II BEDDING AND BACKFILL MATERIAL PER ASTM D-2321. MECHANICALLY COMPACT TO 95% PROCTOR DENSITY IN MAXIMUM 6" LIFTS.

CULVERT DETAIL (7)

SCALE : NTS

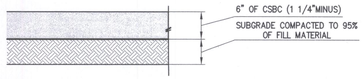

GRAVEL PARKING LOT SECTION (8)

SCALE : NTS

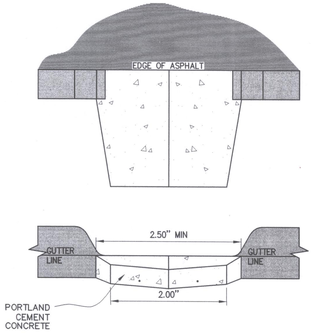

CURB INLET (9)

SCALE : NTS

No.	DATE	BY
4		
3		
2		
1		

CONSULTANTS:

DCI ENGINEERS
DAN CONTRERAS INC
421 WEST RIVERSIDE - SUITE 606 PHONE: (509)455-1445
SPOKANE, WASHINGTON 99201 FAX: (509)455-7462
CIVIL / STRUCTURAL

ZECK BUTLER ARCHITECTS PS

The Foubert Center 421 W Riverside Suite 220 Spokane WA 99201 t 509 . 456 . 8236 f 509 . 747 . 0570
e www.zeckbutler.com

SHEET TITLE: DETAILS

PROJECT TITLE: QUINCY SHOPS
GRANT COUNTY PUBLIC WORKS
EPHRATA, WASHINGTON

SEAL: REGISTERED PROFESSIONAL ENGINEER — STATE OF WASHINGTON — DAN A. CONTRERAS — 19347 — EXPIRES 9/27/2004

DATE	07-12-04
DRAWN	JPC
CHECKED	DAS
PROJECT NUMBER	04-42-029
DRAWING NO.	C6.0

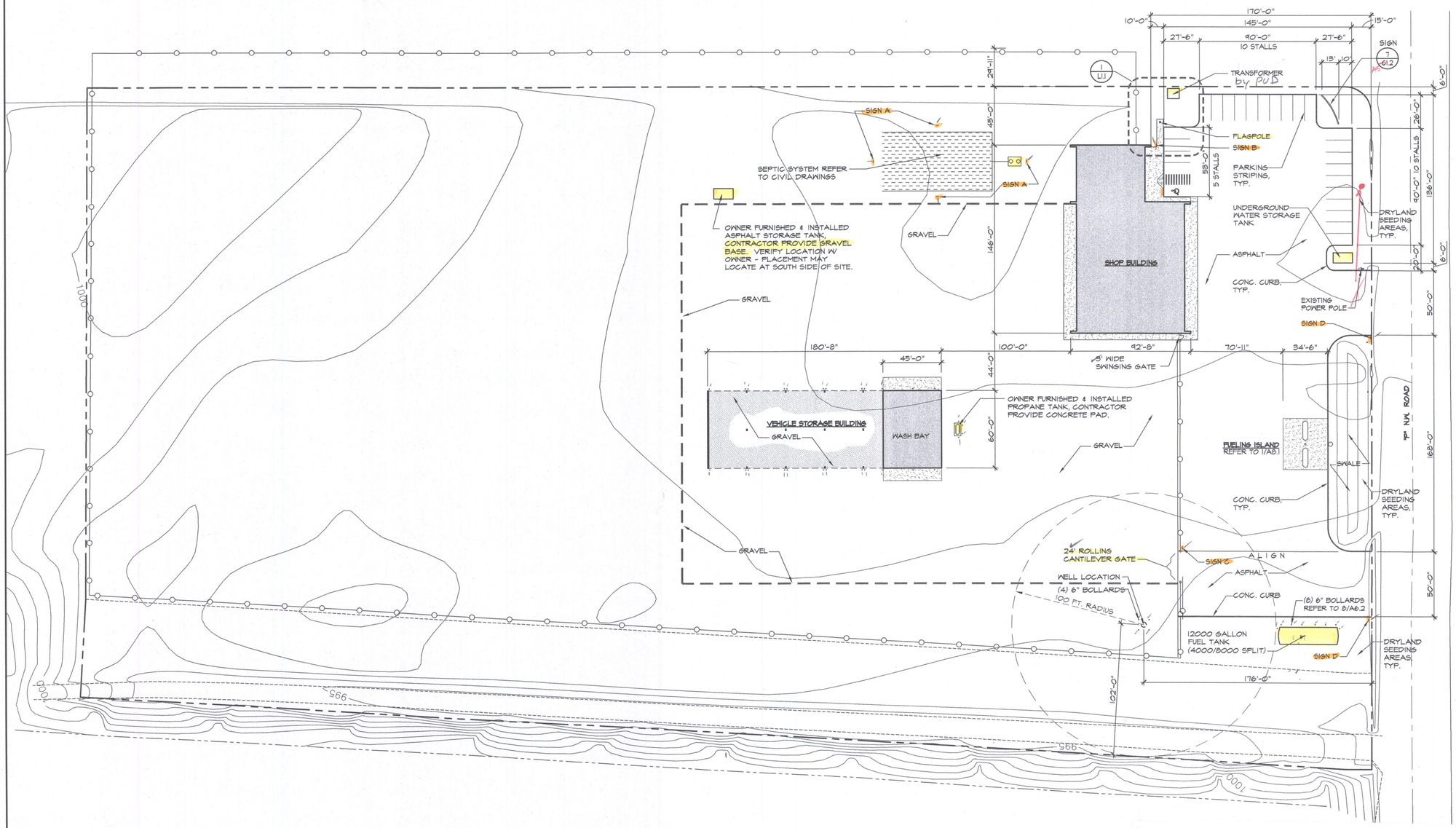

Item No. 4: Sheet AS1.1 - Site Plan:
Fencing, as indicated by line with spaced circles (refer to Sheet C2.0, Reference Note 4) is chain link fencing, 8'-0" height without privacy slats or barb-wire top.

NORTH

SITE PLAN
SCALE: 1"=40'-0"

KEYED CONSTRUCTION NOTES

No.	DATE	BY
4		
3		
2		
1		

ZECK BUTLER ARCHITECTS PS
The Poulsen Center 421 W Riverside Suite 220 Spokane WA 99201 t 509 . 456 . 8236 f 509 . 747 . 0570
e www.zeckbutler.com

SHEET TITLE: SITE PLAN

PROJECT TITLE: GRANT COUNTY PUBLIC WORKS DEPARTMENT
ROAD DISTRICT NO. 3 SHOP FACILITY
QUINCY, WASHINGTON

SEAL: 6829 REGISTERED ARCHITECT
WILLIAM ARTHUR FROEMKE
STATE OF WASHINGTON

DATE	7/12/04
DRAWN	TG
CHECKED	WAF/RFW
PROJECT NUMBER	0415
DRAWING NO.	AS1.1

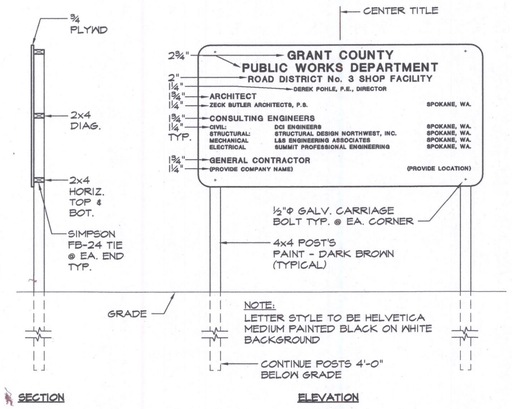

1 PROJECT SIGN

SCALE: 1/2"=1'-0"

LOCATE AS DIRECTED BY OWNER

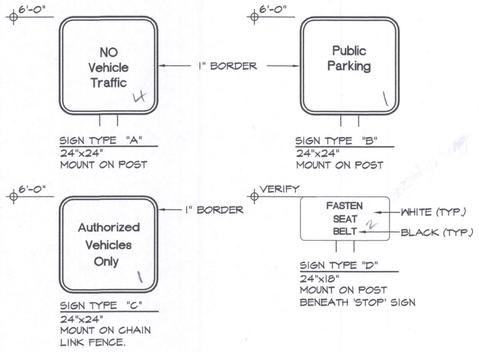

NOTES:
1. SET POSTS IN CONCRETE TO A MINIMUM DEPTH OF 3'-0". USE A SQUARE 2X2 PAINTED STEEL TUBE FOR SIGN POSTS. FABRICATE SIGN PANELS OF ALUMINUM.

4 TRAFFIC SIGNS

SCALE: 1/2"=1'-0"

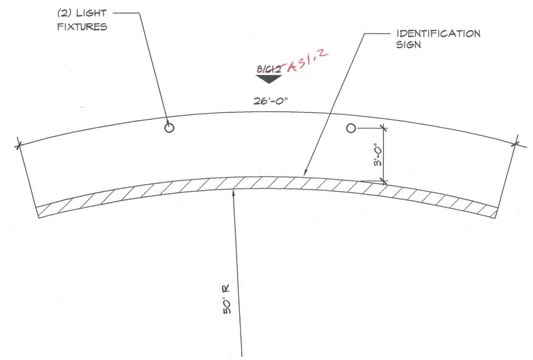

7 IDENTIFICATION SIGN PLAN VIEW

SCALE: 1/4"=1'-0"

Item No. 5: Sheet AS1.2 - Site Details:
Elevation indicator at Detail 7 to read 8/AS1.2
Detail indicator at Detail 8 to read 9/AS1.2
Detail call-out for sign in Detail to read 3/AS1.2

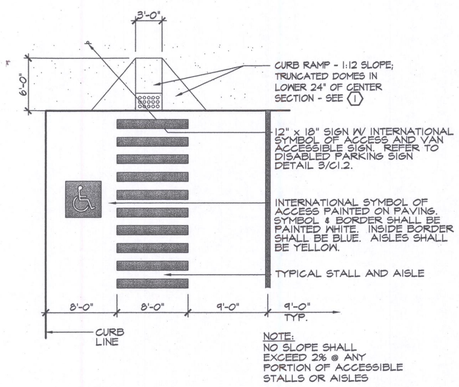

2 HANDICAP PARKING

SCALE: 1/8"=1'-0"

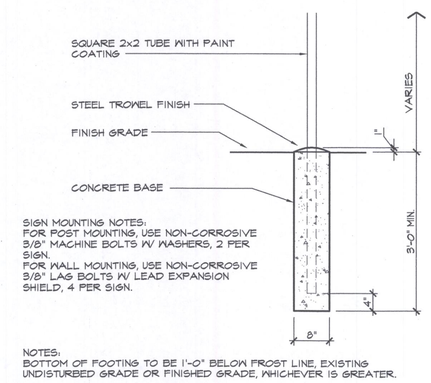

5 SIGN POST DETAIL

SCALE: 3/4"=1'-0"

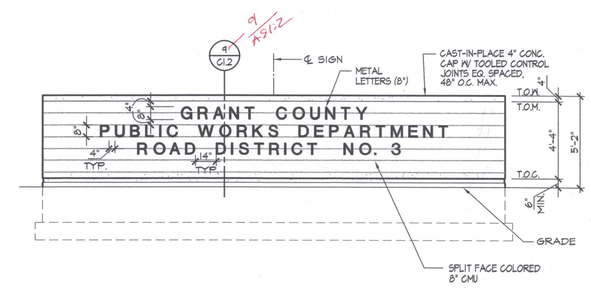

8 IDENTIFICATION SIGN ELEVATION

SCALE: 1/4"=1'-0"

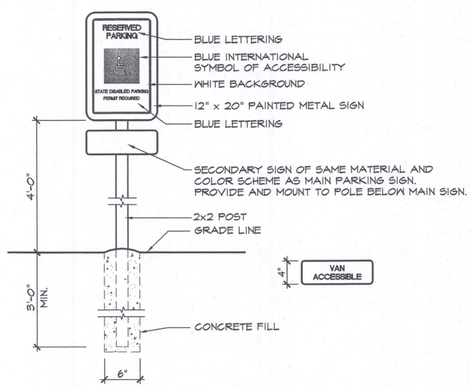

3 HANDICAP PARKING SIGN

SCALE: 1"=1'-0" MOUNTED ON CONC. PILLAR

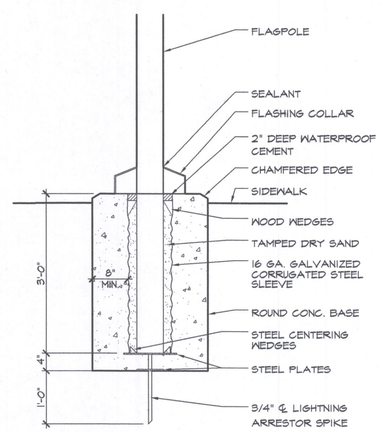

6 FLAGPOLE BASE

SCALE: 1/2"=1'-0"

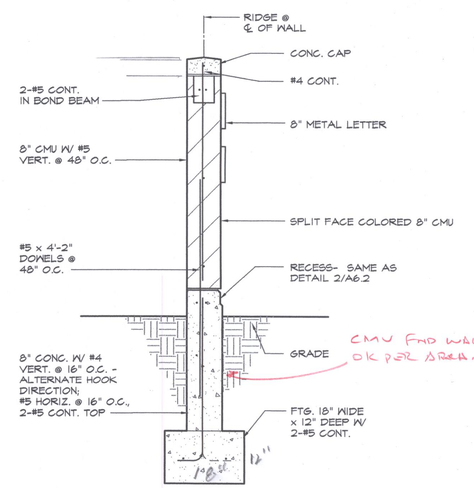

9 IDENTIFICATION SIGN IN SECTION

SCALE: 3/4"=1'-0"

KEYED CONSTRUCTION NOTES

1. TRUNCATED DOMES ARE PAVERS SUPPLIED BY THE OWNER AND INSTALLED BY THE CONTRACTOR. PAVERS ARE OVER 2" SAND, FILTER FABRIC AND 4" COMPACTED GRAVEL BASE. SWEEP FINE SAND INTO JOINTS AFTER FLAT PLATE COMPACTION.

No.	DATE	BY
4		
3		
2		
1		

ZECK BUTLER ARCHITECTS PS
The Poulsen Center 421 W Riverside Suite 220 Spokane WA 99201 t 509 . 456 . 8235 f 509 . 747 . 0570
e www.zeckbutler.com

SHEET TITLE: SITE DETAILS

PROJECT TITLE: GRANT COUNTY PUBLIC WORKS DEPARTMENT
ROAD DISTRICT NO. 3 SHOP FACILITY
QUINCY, WASHINGTON

SEAL: 6829 REGISTERED ARCHITECT WILLIAM ARTHUR FROEMKE STATE OF WASHINGTON

DATE	7/12/04
DRAWN	SVG/TG
CHECKED	WAF/RFW
PROJECT NUMBER	0415
DRAWING NO.	AS1.2

GENERAL LANDSCAPE NOTES

1. WHILE EVERY EFFORT IS MADE TO PROVIDE AN ACCURATE PLANT COUNT ON THE PLANT LIST. OCCASIONAL ERRORS WILL OCCUR. CONTRACTORS SHALL VERIFY PLANT QUANTITIES PRIOR TO SUBMITTING PRICES AND SHALL NOTIFY THE ARCHITECT OF ANY DISCREPANCIES. THE CONTRACTOR SHALL PROVIDE ALL PLANTS SHOWN ON THE DRAWINGS REGARDLESS OF THE QUANTITY INDICATED ON THE PLANT LIST.
2. ALL NURSERY STOCK MUST BE FIRST QUALITY, FULL AND WELL BRANCHED, UNIFORM, AND SYMMETRICAL, SHAPED TRUE TO THE FORM FOR THE SPECIES OR CULTIVAR, FULLY FOLIATED (IN SEASON), AND FREE FROM BARK ABRASIONS, DISFIGUREMENTS, ETC. ALL TREES OF A GIVEN SPECIES OR CULTIVAR MUST BE UNIFORM IN APPEARANCE AND MUST HAVE BEEN OBTAINED FROM A SINGLE GROWER. STRAGGLY, SPINDLY, POORLY BRANCHED, MISSHAPENED, WEAKLY FOLIATED, DAMAGED, AND DISFIGURED PLANTS WILL NOT BE ACCEPTED. WHERE 25% OR MORE OF ANY GROUP OF PLANTS FAILS TO MEET THE ABOVE CRITERIA, THIS SHALL BE CAUSE FOR REJECTING THE ENTIRE GROUP OF PLANTS.
3. PLANTS WHICH DO NOT MEET THE MINIMUM SIZE SPECIFICATION WILL NOT BE ACCEPTED. IF THE SPECIFIED SIZE IS NOT AVAILABLE, PROVIDE THE NEXT LARGER SIZE. WHERE 25% OR MORE OF ANY GROUP OF PLANTS ARE FOUND TO BE UNDERSIZED, THIS SHALL BE CAUSE FOR REJECTING THE ENTIRE GROUP OF PLANTS.
4. AS BACKFILL IN PLANTING HOLES, USE A MIXTURE OF ONE PART ON-SITE SOIL, ONE PART TOPSOIL, AND ONE PART ORGANIC AMENDMENTS (PEAT HUMUS, COMPOST, ROTTED MANURE, ETC.). DO NOT USE ANY ON-SITE SOIL WHICH MIGHT BE DETRIMENTAL TO PLANT HEALTH; REMOVE THESE SOILS AND DISPOSE OF LEGALLY OFF-SITE.
5. STAKE ALL TREES 1½" CALIPER AND OVER. REMOVE STAKES AT END OF WARRANTY PERIOD.
6. PROVIDE "TREE GUARD" OR "ARBOR-GUARD" TREE TRUNK PROTECTORS ON ALL DECIDUOUS TREES PLANTED IN LAWN AREAS.
7. PROVIDE 2x4 SYNTHETIC WOOD-POLYMER EDGING BETWEEN LAWN AREAS AND SHRUB PLANTING AREAS AND ELSEWHERE AS INDICATED.
8. PROVIDE LANDSCAPE FABRIC IN ALL SHRUB PLANTING AREAS. OVERLAP FABRIC 6" AT SEAMS. ROOL FABRIC UP 2" ON SIDE OF EDGING AND SECURE TO EDGING WITH ½"STAPLES AT 12" MAX. O.C. SECURE ELSEWHERE WITH 6"x1"X6" ANCHOR PINS AT 12" MAX. O.C. ELSEWHERE. COVER FABRIC WITH SPECIFIED BARK LATER.
9. PROVIDE 4" MINIMUM DEPTH TOPSOIL IN ALL LAWN AREAS. PROVIDE 2" MINIMUM DEPTH MEDIUM LANDSCAPE BARK IN ALL SHRUB PLANTING AREAS. LANDSCAPE BARK SHALL NOT CONTAIN ANY WOOD CHIPS.
10. CONTRACTOR TO EXERCISE NECESSARY CAUTION TO PROTECT ALL LANDSCAPING FROM DAMAGE.
11. LANDSCAPE CONTRACTOR TO VERIFY THAT SUBGRADE PREPARATION HAS BEEN COMPLETED TO ACCEPTABLE TOLERANCES PRIOR TO BEGINNING WORK.

IRRIGATION SYSTEM NOTES

1. PROVIDE A CONTRACTOR - DESIGNED IRRIGATION SYSTEM IN ALL SHRUB PLANTING AREAS. SEE SPECIFICATIONS FOR SYSTEM DESIGN REQUIREMENTS.
2. THE IRRIGATION SYSTEM DESIGN SHALL CONFORM WITH ALL BEST INDUSTRY STANDARDS FOR COMMERCIAL QUALITY SYSTEMS. RESIDENTIAL GRADE MATERIALS AND INSTALLATION METHODS ARE NOT ACCEPTABLE.
3. THE IRRIGATION SYSTEM DESIGN SHALL BE SUBMITTED FOR APPROVAL PRIOR TO ORDERING MATERIALS AND THE START OF INSTALLATION.
4. SEE SITE UTILITY PLAN FOR LOCATION OF SOURCE OF I IRRIGATION WATER SUPPLY.

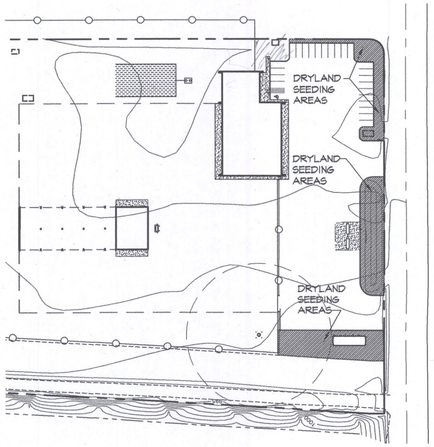

DRYLAND SEEDING AREAS

1"=100'-0"

DRYLAND SEEDING AREA, AS SHOWN ON THIS DRAWING, WILL INCLUDE MINIMUM 8" OF TOP SOIL AND SEEDING AS SPECIFIED IN SECTION 02936. BASE BID REQUIRES GRADE LEVELING AS PREPARATION FOR TOP SOIL.

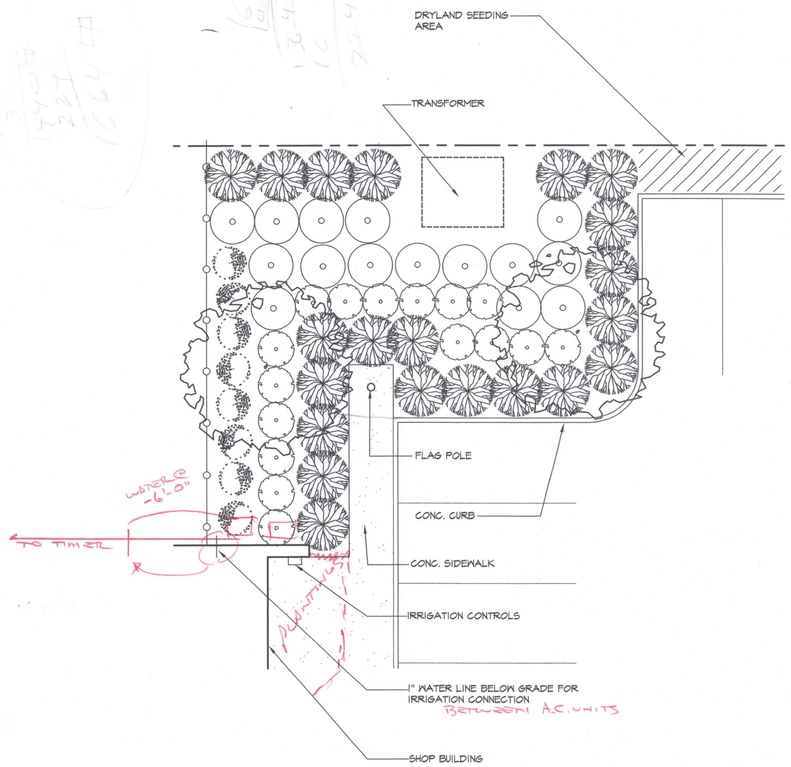

1 LANDSCAPE PLAN DETAIL

1/8"=1'-0"

Item No. 6: Sheet L.1.1 -Plant Legend:
Change quantity of plants as follows:
TCC - (2), CDL - (14), EAC - (8), SBA - (16), BJ -(21). PFT are not used.

PLANTING LEGEND

Symbol	Qty.	Botanical Name	Common Name	Size
TCC	6	Tilia cordata 'Chancellor'	Little leaf Linden	2" Cal.
CDL	17	Cotoneaster dammeri 'Lowfast'	Lowfast Cotoneaster	15"
EAC	6	Evonymus alata 'compacta'	Dwarf Burning Bush	18"
PFT	19	Potentilla fruticosa 'Tangerine'	Tangerine Potentilla	18"
SBA	14	Spiraea bumalda 'A. Waterer'	Anthony Waterer Spirea	24"
BJ	58	Juniperus sabina 'Buffalo'	Buffalo Juniper	24"

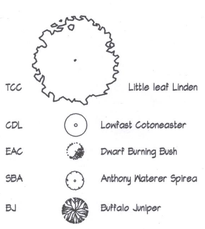

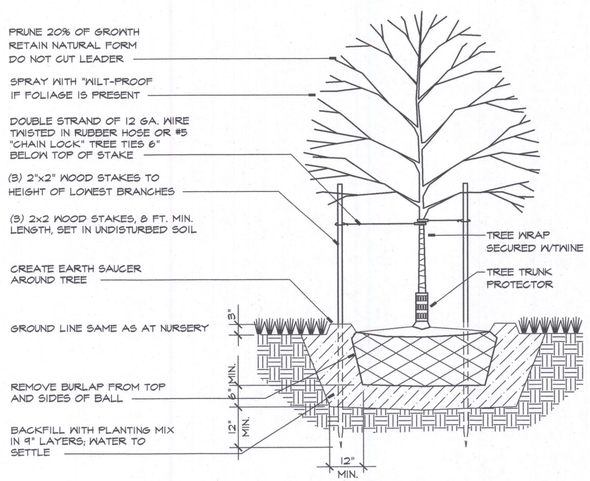

TREE PLANTING DETAIL

NO SCALE

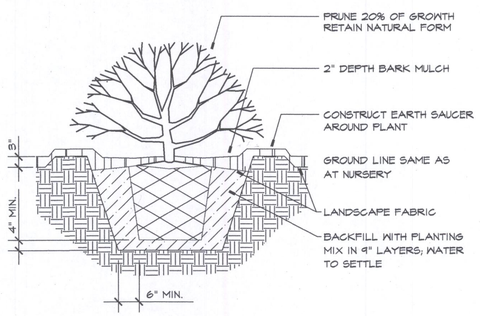

SHRUB PLANTING DETAIL

NO SCALE

No.	DATE	BY
4		
3		
2		
1		

CONSULTANTS:
SITE DESIGN: WESTERN PACIFIC ENGINEERING
STRUCTURAL: STRUCTURAL DESIGN NORTHWEST
MECHANICAL: L&S ENGINEERING
ELECTRICAL: SUMMIT ENGINEERING

ZB[a]
ZECK BUTLER ARCHITECTS PS
The Pavilion Center 421 W Riverside Suite 220 Spokane WA 99201 t 509 . 456 . 8236 f 509 . 747 . 0570
e www.zeckbutler.com

SHEET TITLE: LANDSCAPING PLAN

PROJECT TITLE: GRANT COUNTY PUBLIC WORKS DEPARTMENT
ROAD DISTRICT NO. 3 SHOP FACILITY
QUINCY, WASHINGTON

SEAL: 6829 REGISTERED ARCHITECT WILLIAM ARTHUR FROEMKE STATE OF WASHINGTON

DATE	7/12/04
DRAWN	MTB/SVG
CHECKED	RFW
PROJECT NUMBER	0415
DRAWING NO.	L1.1

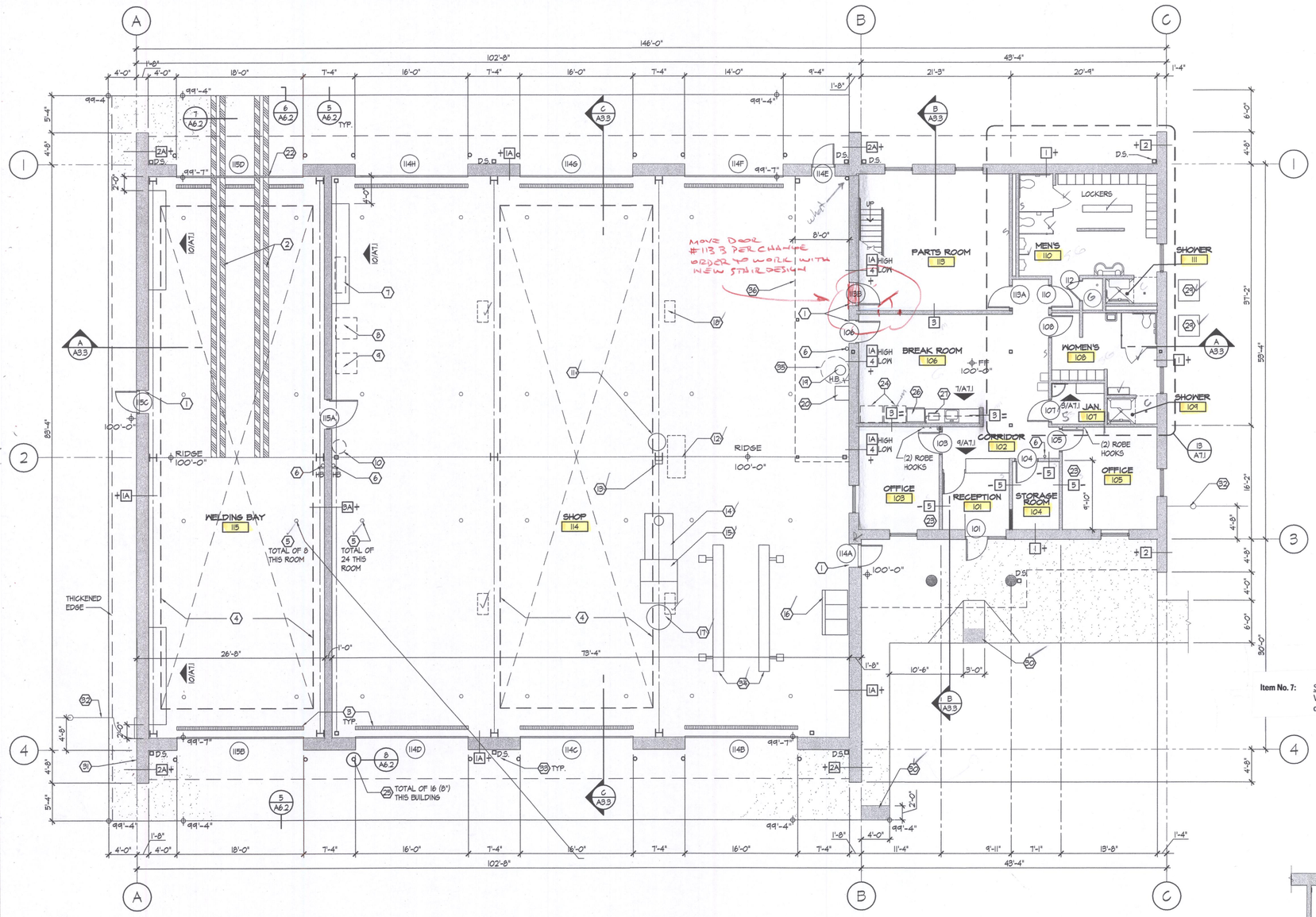

PLAN NORTH

FLOOR PLAN - SHOP BUILDING

SCALE: 1/8" = 1'-0"

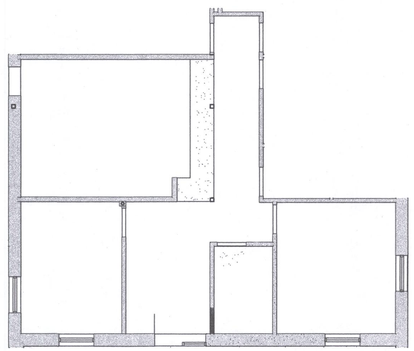

REFLECTED CEILING PLAN

SCALE: 1/8" = 1'-0"

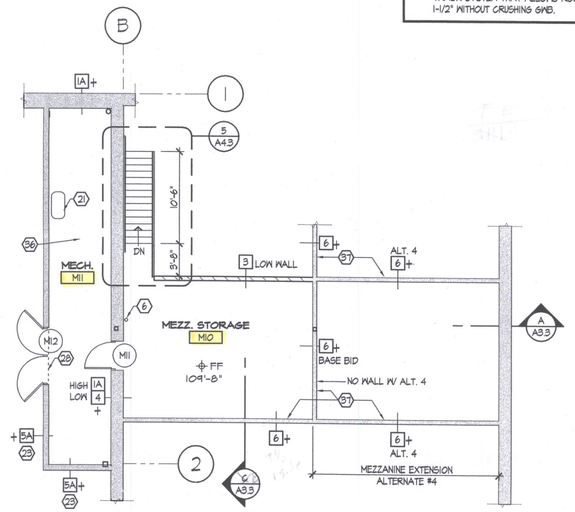

MEZZANINE PLAN-SHOP BUILDING

SCALE: 1/8" = 1'-0"

KEYED CONSTRUCTION NOTES

1. WARP CONC. SLAB TO DOOR OPENING FOR SMOOTH, UNABRUPT TRANSITION.
2. CONTINUOUS GALVANIZED CHANNEL TRACKS EMBEDDED IN CONCRETE SLAB.
3. TRENCH DRAIN - REFER TO MECHANICAL DRAWINGS.
4. O.H. BRIDGE CRANE - (5 TON). - BRIDGE AND HOIST OF WELDING BAY CRANE WILL BE ALTERNATE #1.
5. CAST-IN FLOOR TIE DOWN ANCHORS.
6. FIRE EXTINGUISHER.
7. BENCH BRAKE LATHE (N.I.C.).
8. HYDRAULIC PIN PRESS (N.I.C.).
9. DRILL PRESS (N.I.C.).
10. MOBILE AIR-OPERATED GREASE PUMP UNIT (N.I.C.).
11. PORTABLE USED OIL DRUM RECEIVER UNIT.- ALTERNATE #2.
12. O.H. LUBE, GREASE, WATER, AIR, HOSE REEL UNIT (5-REEL). - ALTERNATE #2.
13. AIR OPERATED FILTER CRUSHER - MOUNT ON STEEL COLUMN. - ALTERNATE #2.
14. WASTE OIL TANK FOR OIL HEATERS, WITH RECEIVER & EVAC PUMP - REFER TO MECHANICAL DRAWINGS & SPECIFICATIONS.
15. LUBE TANKS (2-280 GAL.) FOR O.H. UNIT. - ALTERNATE #2.
16. LUBE DISPENSING RACK - (6 TANK UNIT). - ALTERNATE #2.
17. GREASE DRUM FOR O.H. UNIT. - ALTERNATE #2.
18. OVERHEAD VEHICLE EXHAUST HOSE REEL (TYP. 4 LOCATIONS) - REFER TO MECHANICAL DRAWINGS.
19. EMERGENCY EYE/SHOWER UNIT - REFER TO MECHANICAL DRAWINGS.
20. UTILITY SINK - REFER TO MECHANICAL DRAWINGS.
21. AIR COMPRESSOR - N.I.C.
22. NOTE THAT FLOOR SLOPE CHANGES UNDER O.H. DOOR FROM 1/4"/F.T. TO 1/2"/F.T. THIS ALSO EFFECTS CHANNEL TRACKS.
23. 3" SOUND BATT INSULATION IN THIS WALL.
24. VENDING MACHINE (N.I.C.).
25. PIPE BOLLARD - REFER TO 8/A6.2
26. REFRIGERATOR. - N.I.C.
27. MICROWAVE OVEN. - N.I.C.
28. PROVIDE HEAVY CHAIN ACROSS OPENING WITH SNAP HOOK @ BOTH ENDS. INSTALL CORRESPONDING EYE BOLTS IN 2" SIDE FACE OF H.M. FRAME AT 3'-6" ABOVE FLOOR.
29. CONCRETE PADS FOR HEAT PUMPS - SEE MECH. VERIFY SIZES AND LOCATIONS WITH MECH.
30. TRUNCATED DOME PAVERS - REFER TO 1/A51.2.
31. LOCATION OF SECONDARY FUEL DISPENSING EMERGENCY SHUT-OFF SWITCH. SIMILAR TO DETAIL 5/A8.1
32. FENCE LINE.
33. 3"x 4" DOWNSPOUTS ARE TIGHTLINED TO DRAIN LINES. REFER TO CIVIL DRAWINGS, TYPICAL, EXCEPTION: 2 ON WEST SIDE OF OFFICE ARE SURFACED DRAIND ONTO CONCRETE SPLASH BLOCKS.
34. VEHICLE LIFT - ALTERNATE # 2.
35. SLOPE FLOOR SLAB FOR 4'-0" RADIUS AROUND FLOOR DRAIN AT SHOWER UNIT. DRAIN ELEVATIONS TO BE 2" LOWER THAT FLOOR.
36. UNDERSIDE OF MECHANICAL MEZZANINE TO HAVE 6" METAL STUD JOISTS W/ 5/8" GWB AND R-19 BATT INSULATION. ALSO WRAP AND INSULATE SUPPORTING FLOOR BEAM TO ALIGN WITH WALL ABOVE. ACOUSTICALLY SEAL ALL OPENINGS BETWEEN MEZZANINE AND SHOP, INCLUDING WALLS.
37. TOP OF METAL STUD FRAMED WALLS AT STRUCTURE ABOVE TO BE FRAMED AROUND BAR JOISTS AND CONNECTED TO STEEL DECK WITH DEEP-LEG DOUBLE TRACK SYSTEM THAT ALLOWS ROOF TO MOVE A TOTAL OF 1-1/2" WITHOUT CRUSHING GWB.

No.	DATE	BY
4		
3		
2		
1		

ZECK BUTLER ARCHITECTS PS
The Paulsen Center 421 W Riverside Suite 220 Spokane WA 99201 t 509 . 456 . 8236 f 509 . 747 . 0570
© www.zeckbutler.com

SHEET TITLE: FLOOR PLAN - SHOP BUILDING

PROJECT TITLE: GRANT COUNTY PUBLIC WORKS DEPARTMENT
ROAD DISTRICT NO. 5 SHOP FACILITY
QUINCY, WASHINGTON

SEAL: 6829 REGISTERED ARCHITECT WILLIAM ARTHUR FROEMKE STATE OF WASHINGTON

DATE	7/12/04
DRAWN	WAF/SVG/TG
CHECKED	WAF/RFW
PROJECT NUMBER	0415
DRAWING NO.	A1.1

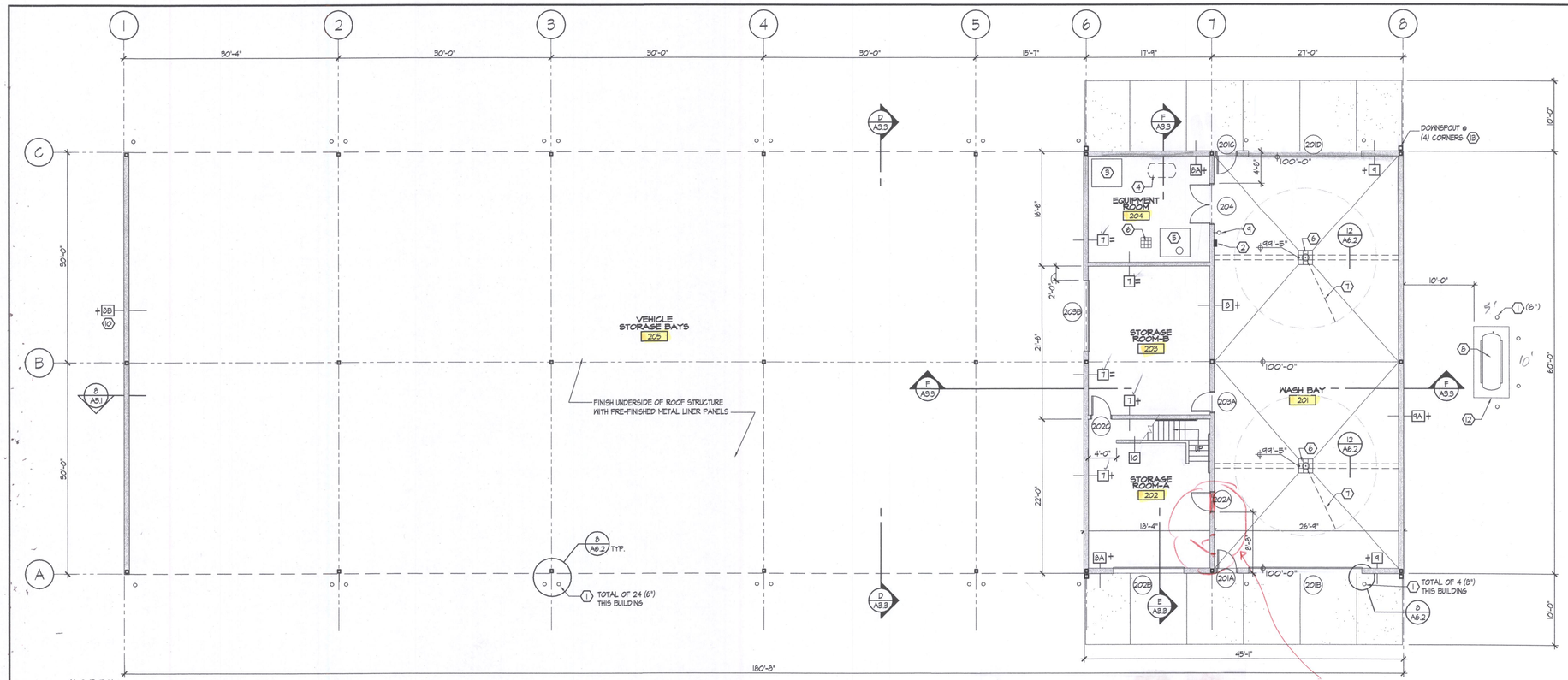

FLOOR PLAN - VEHICLE STORAGE BUILDING

SCALE: 1/8" = 1'-0"

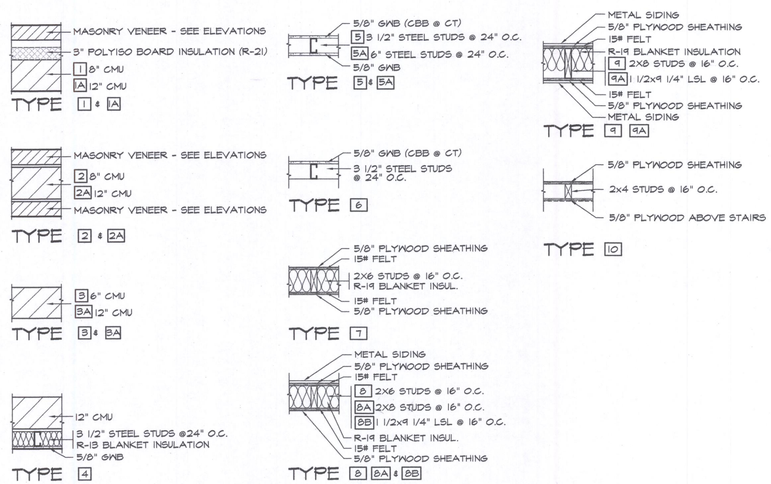

WALL TYPES

SCALE: 3/4" = 1'-0"

+ INDICATES PARTITION GOES TO STRUCTURE ABOVE
– INDICATES PARTITION STOPS 6" ABOVE CEILING
= INDICATES PARTITION STOPS AND IS INTEGRATED W/ GWB CEILING

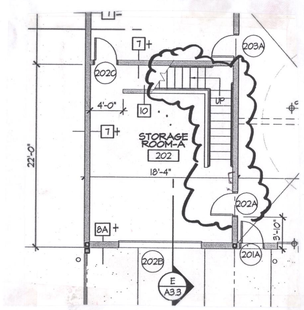

Move Door # 202A
Per revised stair drwg

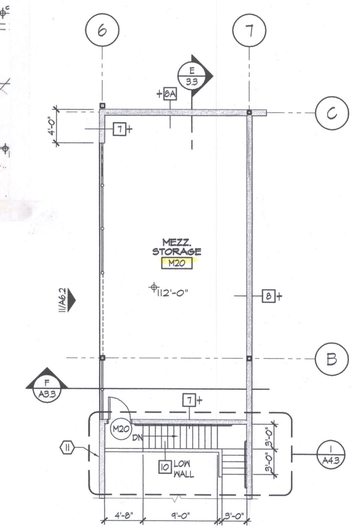

MEZZANINE PLAN VEHICLE STOR. BUILDING

SCALE: 1/8" = 1'-0"

KEYED CONSTRUCTION NOTES

1. PIPE BOLLARD - REFER TO 8/A6.2
2. WASH CONTROLS FOR BOTH WANDS
3. AREA FOR WELL WATER COMPRESSION TANKS
4. AIR COMPRESOR (FUTURE - N.I.C.)
5. PRESSURE WASHER
6. FLOOR DRAINS - SEE MECH.
7. SPRAY BOOM W/ HOSE & WAND
8. PROPANE TANK - N.I.C. (INSTALL PIPING).
9. FIRE EXTINGUISHER
10. NO INSULATION AT THIS WALL
11. 12" x 12" TRANSFER LOUVER W/ BUG SCREEN
12. 4" THICK CONCRETE PAD WITH 8" THICK EDGES. VERIFY SIZE WITH OWNER.
13. DOWNSPOUT TO ELBOW ONTO CONCRETE SPLASH BLOCK TURNED TO THE SIDE.

No.	DATE	BY
4		
3		
2		
1		

ZECK BUTLER ARCHITECTS PS
The Pavilion Center 421 W Riverside Suite 220 Spokane WA 99201 t 509.456.8236 f 509.747.0570
e www.zeckbutler.com

SHEET TITLE: FLOOR PLAN - VEHICLE STORAGE BUILDING

PROJECT TITLE: GRANT COUNTY PUBLIC WORKS DEPARTMENT
ROAD DISTRICT NO. 8 SHOP FACILITY
QUINCY, WASHINGTON

SEAL: 6829 REGISTERED ARCHITECT WILLIAM ARTHUR FROEMKE STATE OF WASHINGTON

DATE	7/12/04
DRAWN	WAF/SVG/TG
CHECKED	WAF/RFW
PROJECT NUMBER	0415
DRAWING NO.	A1.2

ABBREVIATIONS

ACP - ACOUSTICAL CEILING PANEL(SUSPENDED)
ACT - ACOUSTIC CEILING TILE
CBB - CEMENTITIOUS BACKER BOARD
CMU - CONCRETE MASONRY UNIT
CONC. - CONCRETE
CT - CERAMIC TILE
DP - DECK PAINT
EXPO. STR. - EXPOSED STRUCTURE
F.F. - FACTORY FINISH
GWB - GYPSUM WALL BOARD
MWP - METAL WALL PANEL
P - PAINT
R.B. - RUBBER BASE
SEAL - SEALED CONCRETE FLOOR
SF - SCRIM FABRIC
SGWB - SUSPENDED GYPSUM WALL BOARD SYSTEM
VCT - VINYL COMPOSITE TILE.
MWP - METAL WALL PANEL
PLYWD - PLYWOOD
- NOT APPLICABLE

KEYED CONSTRUCTION NOTES

1. GWB FIRE TAPE FINISH. PAINT EXPOSED SURFACES.
2. CT WAINSCOT ON ALL WALLS AT HEIGHT OF 55". PROVIDE CBB BEHIND CT ON STUD WALLS. PAINTED GWB ABOVE WAINSCOT ON STUD WALLS. PAINTED CMU.
3. SAME AS NOTE 2 EXCEPT CT ON ALL SHOWER WALLS ARE FULL HEIGHT, INCLUDING DRYING AREA.
4. PAINTED GWB EXCEPT CT ON CBB ON SHOWER CEILINGS, WHICH INCLUDES DRYING AREA.
5. R-38 BLANKET INSULATION AT CEILING TJI's.
6. ACOUSTICAL TILE (ACT) ON GWB UNDER MEZZANINE. ACP IN HALLWAY AREAS. SEPERATE CEILINGS W/ WIDE GWB HEADER.
7. FURRED GWB ON BOTTOM OF MEZZANINE STRUCTURE W/ ACOUSTICAL CEILING TILE. ACP IN HALLWAY AT ELEVATION 108'-0". WIDE GWB HEADER BETWEEN CEILINGS AT ELEVATION 107'-10".
8. INSTALL LAYER OF 15# FELT UNDERLAYMENT BETWEEN STRUCTURAL SUBFLOOR AND FINISHED 3/4" PLYWOOD FLOOR.
9. METAL WALL PANEL FASTENED DIRECTLY TO BOTTOM OF TJI JOISTS WITH FELT FABRIC BETWEEN.
10. RUBBER BASE ON GWB ONLY.
11. LOWER 12'-0" OF WALL AND ALL COLUMNS TO BE FLAT GRAY PAINT COLOR. REMAINDER OF WALL AND COLUMNS TO BE TYPICAL ROOM COLOR.
12. WALL PAINTING TO INCLUDE ALL EXPOSED STEEL COLUMNS, BEAMS AND STRUCTURAL MEMBERS. BAR JOISTS AND STEEL DECK CEILING ARE NOT PAINTED.

SHOP BUILDING - ROOM FINISH SCHEDULE

ROOM NO.	AREA NAME	FLOOR		BASE		WEST WALL		NORTH WALL		EAST WALL		SOUTH WALL		CEILINGS			NOTES
		MATL.	FINISH	MATL.	FINISH	MATL.	FINISH	MATL.	FINISH	MATL.	FINISH	MATL.	FINISH	MATL.	FINISH	HT	
101	RECEPTION	CONC.	VCT	R.B.	F.F.	-	-	GWB	P	CMU	P	GWB	P	ACP	F.F.	8'-0"	
102	CORRIDOR	CONC.	VCT	R.B.	F.F.	CMU	P	GWB	P	GWB	P	GWB	P	ACP	F.F.	8'-0"	
103	OFFICE	CONC.	VCT	R.B.	F.F.	CMU	P	GWB	P	CMU	P	GWB	P	ACP	F.F.	8'-0"	
104	STORAGE ROOM	CONC.	VCT	R.B.	F.F.	GWB	P	GWB	P	CMU	P	GWB	P	ACP	F.F.	8'-0"	
105	OFFICE	CONC.	VCT	R.B.	F.F.	GWB	P	CMU	P	CMU	P	GWB	P	ACP	F.F.	8'-0"	
106	BREAK ROOM	CONC.	VCT	R.B.	F.F.	CMU	P	GWB	P	CMU	P	GWB	P	6	F.F.	7	
107	JANITOR	CONC.	VCT	R.B.	F.F.	GWB	P	GWB	P	GWB	P	GWB	P	GWB	P	8'-0"	
108	WOMEN'S RESTROOM/LOCKERS	CONC.	CT	CT	F.F.	2	2	2	2	2	2	2	2	SGWB	P	8'-0"	
109	WOMEN'S SHOWER	CONC.	CT	CT	F.F.	3	3	2	2	3	3	3	3	4	4	8'-0"	
110	MEN'S RESTROOM/LOCKERS	CONC.	CT	CT	F.F.	2	2	2	2	2	2	2	2	SGWB	P	8'-0"	
111	MEN'S SHOWERS	CONC.	CT	CT	F.F.	3	3	2	2	3	3	3	3	4	4	8'-0"	
112	WATER HEATER CLOSET	CONC.	CT	CT	F.F.	GWB	P	GWB	P	GWB	P	GWB	P	GWB	P	8'-0"	
113	PARTS ROOM	CONC.	SEAL	10	10	CMU	P	GWB	P	CMU	P	GWB	P	EXPO. STR.	-	16'±	12
114	SHOP	CONC.	SEAL	-	-	CMU	P	CMU	P	CMU	P	CMU	P	EXPO. STR.	-	30'±	12
115	WELDING BAY	CONC.	SEAL	-	-	CMU	11	CMU	P	CMU	11	CMU	P	EXPO. STR.	-	30'±	12
M10	MEZZANINE STORAGE	CONC.	SEAL	-	-	CMU	P	GWB	P	GWB	P	GWB	P	EXPO. STR.	-	9'±	12
M11	MECHANICAL/ELECTRICAL	CONC.	SEAL	-	-	CMU	P	CMU	P	1	P	1	P	EXPO. STR.	-	20'±	12

VEHICLE STORAGE BUILDING-ROOM FINISH SCHEDULE

ROOM NO.	AREA NAME	FLOOR		BASE		NORTH WALL		EAST WALL		SOUTH WALL		WEST WALL		CEILING			NOTES
		MATL.	FIN	MATL.	FIN	MATL.	FIN	MATL.	FIN	MATL.	FIN	MATL.	FIN	MATL.	FIN	HT	
201	WASH BAY	CONC	SEAL	-	-	MWP	F.F.	MWP	F.F.	MWP	F.F.	MWP	F.F.	MWP 9	F.F.	22'±	
202	STORAGE ROOM-A	CONC	SEAL	-	-	PLYWD	P	PLYWD	P	PLYWD	P	PLYWD	P	SF	F.F.	20'±	
203	STORAGE ROOM-B	CONC	SEAL	-	-	PLYWD	P	PLYWD	P	PLYWD	P	PLYWD	P	SF	F.F.	10'-4"	
204	EQUIPMENT ROOM	CONC	SEAL	-	-	PLYWD	P	PLYWD	P	PLYWD	P	PLYWD	P	SF	F.F.	10'-4"	5
205	VEHICLE STORAGE BAYS	GRAVEL	-	-	-	-	-	PLYWD	P	-	-	PLYWD	P	MWP 9	F.F.	22'±	
M20	MEZZANINE STORAGE	PLYWD	DP	-	-	PLYWD	P	PLYWD	P	PLYWD	P	PLYWD	P	MWP 9	F.F.	10'±	8

KEYED CONSTRUCTION NOTES

1. MANUFACTURER'S STANDARD ANGLE AND CHANNEL JAMB ASSEMBLY.
2. TINTED OUTBOARD LITE, PATTERNED INBOARD LITE.
3. CLEAR GLASS, INBOARD & OUTBOARD LITE PANELS.
4. TINTED OUTBOARD LITE, CLEAR INBOARD LITE.
5. BOTTOM OF DOOR FRAME IS LOWER THAN DOOR BY LESS THAN 1" DUE TO SLOPING FLOOR SLAB.
6. NOTE UNUSUAL DOOR HEIGHT OF 7'-5"
7. ACCENT COLOR
8. OBSCURE INBOARD GLASS
9. PAINT SHOP SIDE OF DOOR AND FRAME SAME COLOR AS WALL.

ABBREVIATIONS

HM - HOLLOW METAL
INS - INSULATED
O.H. - OVERHEAD
TEMP - TEMPERED
WG - WIRE GLASS
- NOT APPLICABLE

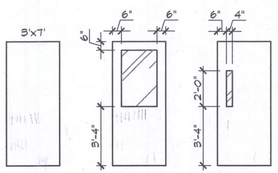

DOOR TYPES

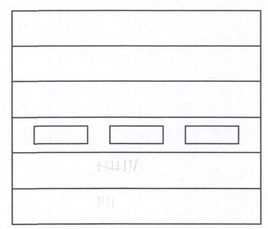

D (O.H. SECTIONAL)

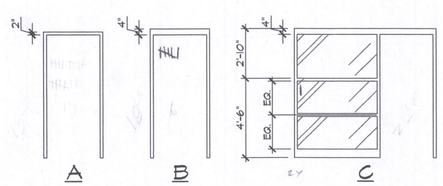

FRAME TYPES

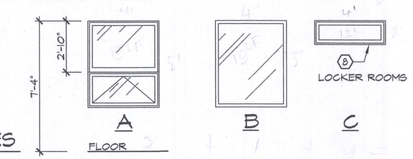

WINDOW TYPES

WINDOW SCHEDULE

TYPE	SIZE	MATL.	FINISH	GLAZING	DETAILS		DETAILS ON SHEET A6.1	NOTES
					HEAD	JAMB	SILL	
A	4'-0"x4'-8"	WOOD	AL/FF	INS	14	15	16	4
B	4'-0"x4'-8"	WOOD	AL/FF	INS/TEMP	14	15	16	3
C	4'-0"x1'-4"	WOOD	AL/FF	INS	14	15	16	2

SHOP BUILDING - DOOR & FRAME SCHEDULE

RFI #4: ELIM. O.H. STOPS - STOP TO BE ON CLOSER

NO.	DOOR						FRAME					DETAILS			DETAILS ON SHEET A6.1	HDWR. GROUP	FIRE RATED	NOTES
	SIZE W x H x T	TYPE	MATL.	FINISH	GLAZING	TYPE	DEPTH	MATL.	FINISH	GLAZING	HEAD	JAMB LATCH	JAMB HINGE	THRESHOLD				
101	3'-0" x 7'-0" x 1¾"	B	HM	P 7	INS/TEMP	C	5¾"	HM	P 7	INS/TEMP	5	6	6	8	12	-		
103	3'-0" x 7'-0" x 1¾"	B	HM	P	TEMP	A	5¾"	HM	P	-	1	1	2	-	1	-		
104	3'-0" x 7'-0" x 1¾"	A	HM	P	-	A	5¾"	HM	P	-	1	1	1	-	8	-		
105	3'-0" x 7'-0" x 1¾"	B	HM	P	TEMP	A	5¾"	HM	P	-	1	1	1	-	1	-		
106	3'-0" x 7'-0" x 1¾"	B	HM	P	INS/TEMP	B	5¾"	HM	P	-	3	3	3	-	5	-		
107	3'-0" x 7'-0" x 1¾"	A	HM	P	-	A	5¾"	HM	P	-	1	1	1	-	3	-		
108	3'-0" x 7'-0" x 1¾"	A	HM	P	-	A	5¾"	HM	P	-	1	1	1	-	11	-		
110	3'-0" x 7'-0" x 1¾"	A	HM	P	-	A	5¾"	HM	P	-	1	1	1	-	11	-		
112	2'-8" x 7'-0" x 1¾"	A	HM	P	-	A	5¾"	HM	P	-	1	1	1	-	6	-		
113A	3'-0" x 7'-0" x 1¾"	B	HM	P	TEMP	A	5¾"	HM	P	-	1	1	4	-	7	-		
113B	3'-0" x 7'-0" x 1¾"	B	HM	P	TEMP	B	5¾"	HM	P	-	3	3	3	-	7	-		
114A	3'-0" x 7'-0" x 1¾"	B	HM	P	INS/TEMP	B	5¾"	HM	P	-	5	6	6	8	12	-		
114B	16'-0" x 16'-5"	D	STEEL	P	PLASTIC	1	-	STEEL	P	-	9	10	10	2/A4.1	13	-	O.H. DOOR - ELECT.	
114C	16'-0" x 16'-5"	D	STEEL	P	PLASTIC	1	-	STEEL	P	-	9	10	10	2/A4.1	13	-	O.H. DOOR - ELECT.	
114D	16'-0" x 16'-5"	D	STEEL	P	PLASTIC	1	-	STEEL	P	-	9	10	10	2/A4.1	13	-	O.H. DOOR - ELECT., EXTERIOR SWITCH	
114E	3'-0" x 7'-5" x 1¾"	B	HM	P	-	B	5¾"	HM	P	-	5	6	6	8	12	-	6	
114F	14'-0" x 16'-5"	D	STEEL	P	PLASTIC	1	-	STEEL	P	-	9	10	10	2/A4.1	13	-	O.H. DOOR - ELECT.	
114G	16'-0" x 16'-5"	D	STEEL	P	PLASTIC	1	-	STEEL	P	-	9	10	10	2/A4.1	13	-	O.H. DOOR - ELECT., EXTERIOR SWITCH	
114H	16'-0" x 16'-5"	D	STEEL	P	PLASTIC	1	-	STEEL	P	-	9	10	10	2/A4.1	13	-	O.H. DOOR - ELECT.	
115A	4'-0" x 7'-0" x 1¾"	C	HM	P	WG	B 5	5¾"	HM	P	-	7	7	7	-	2	60 MIN.		
115B	18'-0" x 16'-5"	D	STEEL	P	PLASTIC	1	-	STEEL	P	-	9	10	10	2/A4.1	13	-	O.H. DOOR - ELECT.	
115C	3'-0" x 7'-0" x 1¾"	B	HM	P	INS/TEMP	B	5¾"	HM	P	-	5	6	6	8	12	-		
115D	18'-0" x 16'-5"	D	STEEL	P	PLASTIC	1	-	STEEL	P	-	9	10	10	2/A4.1	13	-	O.H. DOOR - ELECT.	
M11	3'-0" x 7'-0" x 1¾"	A	HM	P	-	A	5¾"	HM	P	-	3	3	3	-	3	-		
M12	PR. 3'-0" x 7'-0" x 1¾"	A	HM	9	-	A	7¾"	HM	9	-	1	1	1	-	10	-		

VEHICLE STORAGE BUILDING - DOOR & FRAME SCHEDULE

NO.	DOOR						FRAME					DETAILS			DETAILS ON SHEET A6.1	HDWR. GROUP	RATING	NOTES
	SIZE W x H x T	TYPE	MATL.	FINISH	GLAZING	TYPE	DEPTH	MATL.	FINISH	GLAZING	HEAD	JAMB LATCH	JAMB HINGE	THRESHOLD				
201A	3'-0" x 7'-0" x 1¾"	B	HM	P	INS/TEMP	A	9½"	HM	P	-	13	13	13	8	9	-		
201B	16'-0" x 16'-0"	D	STEEL	P	PLASTIC	1	-	STEEL	P	-	11	12	12	E/A3.3	13	-	O.H. DOOR - ELECT.	
201C	3'-0" x 7'-0" x 1¾"	B	HM	P	INS/TEMP	A	9½"	HM	P	-	13	13	13	8	9	-		
201D	16'-0" x 16'-0"	D	STEEL	P	PLASTIC	1	-	STEEL	P	-	11	12	12	E/A3.3	13	-	O.H. DOOR - ELECT.	
202A	3'-0" x 7'-0" x 1¾"	A	HM	P	-	A	7¾"	HM	P	-	13	13	13	-	4	-		
202B	10'-0" x 12'-0"	D	STEEL	P	PLASTIC	1	-	STEEL	P	-	11	12	12	E/A3.3	13	-	O.H. DOOR - MANUAL	
202C	3'-0" x 7'-0" x 1¾"	A	HM	P	-	A	7¾"	HM	P	-	13	13	13	-	7	-		
203A	3'-0" x 7'-0" x 1¾"	A	HM	P	-	A	7¾"	HM	P	-	13	13	13	-	7	-		
203B	10'-0" x 8'-0"	D	STEEL	P	PLASTIC	1	-	STEEL	P	-	11	12	12	E/A3.3	13	-	O.H. DOOR - MANUAL	
204	PR 3'-0" x 7'-0" x 1¾"	A	HM	P	-	A	7¾"	HM	P	-	13	13	13	-	14	-		
M20	3'-0" x 7'-0" x 1¾"	A	HM	P	-	A	7¾"	HM	P	-	13	13	13	-	4	-		

No.	DATE	BY
4		
3		
2		
1		

ZECK BUTLER ARCHITECTS PS
The Paulsen Center 421 W Riverside Suite 220 Spokane WA 99201 t 509 . 456 . 8236 f 509 . 747 . 0570
e www.zeckbutler.com

SHEET TITLE: ROOM FINISH SCHEDULE, DOOR SCHEDULE, DOOR & FRAME TYPES

PROJECT TITLE: GRANT COUNTY PUBLIC WORKS DEPARTMENT
ROAD DISTRICT NO. 3 SHOP FACILITY
QUINCY, WASHINGTON

SEAL: 6829 REGISTERED ARCHITECT WILLIAM ARTHUR FROEMKE STATE OF WASHINGTON

DATE	7/12/04
DRAWN	SVG/TG
CHECKED	WAF/RFW
PROJECT NUMBER	0415
DRAWING NO.	A2.1

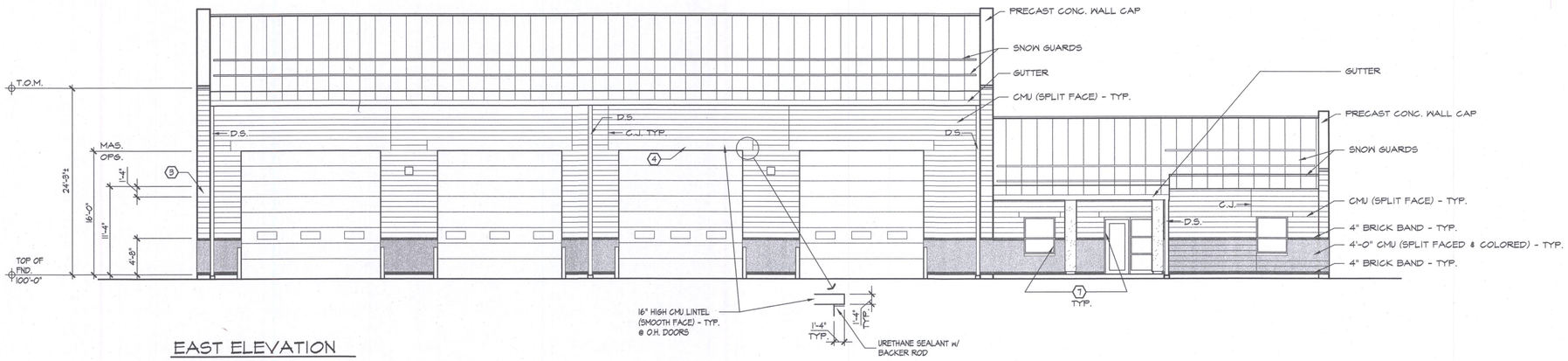

EAST ELEVATION

SCALE: ⅛" = 1'-0"

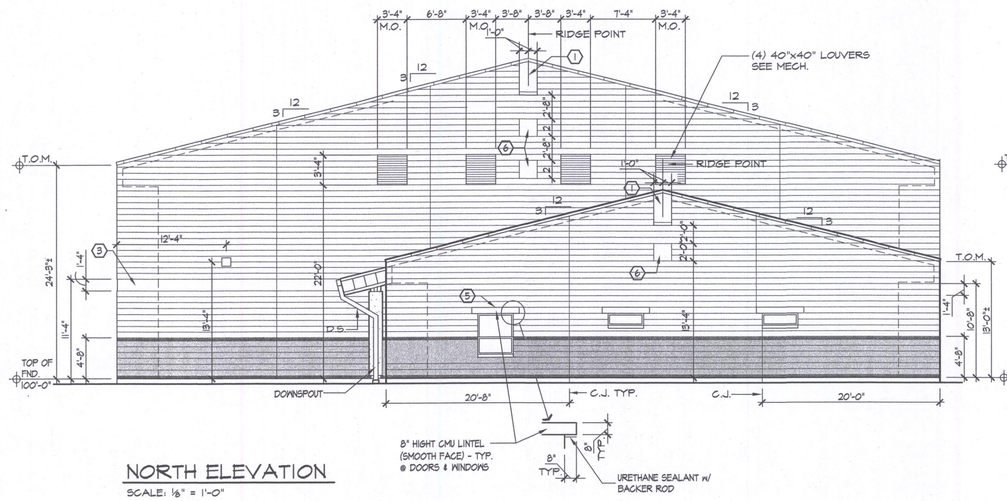

NORTH ELEVATION

SCALE: ⅛" = 1'-0"

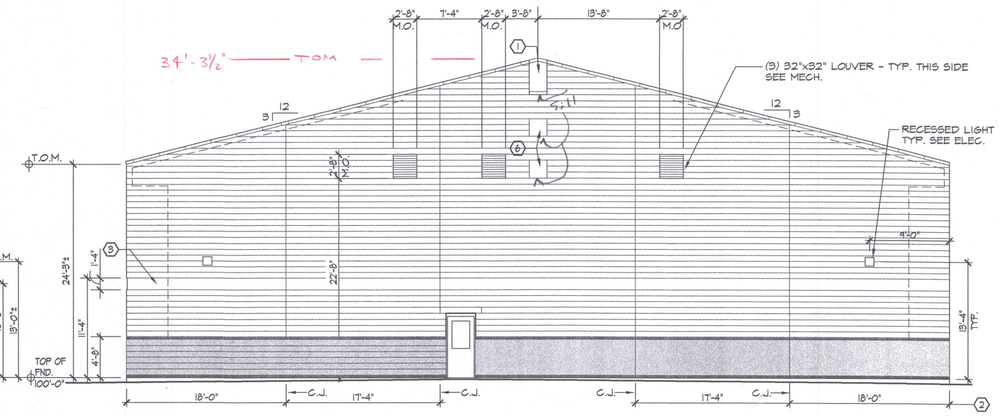

SOUTH ELEVATION

SCALE: ⅛" = 1'-0"

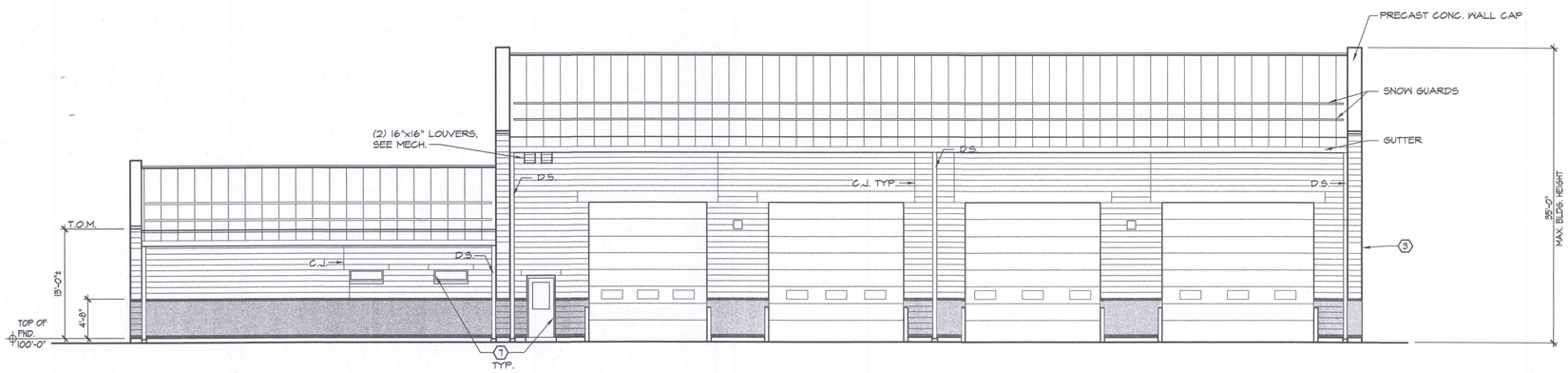

WEST ELEVATION

SCALE: ⅛" = 1'-0"

KEYED CONSTRUCTION NOTES

1. SMOOTH FACED CMU AS PART OF THE STRUCTURAL CMU WALL.
2. CONTROL JOINT LOCATIONS SAME FOR OPPOSITE SIDE.
3. SMOOTH FACE SOLDIER COURSING CMU VENEER BAND ON WEST AND EAST FACES INCLUDING BOTH SIDES OF WING WALLS.
4. SMOOTH FACE SOLDIER COURSING CMU VENEER LINTEL.
5. ONE SCORE SMOOTH FACE CMU VENEER LINTEL.
6. ONE SCORE SMOOTH FACE CMU VENEER RECESSED ¾". PROVIDE MORTOR WASH AT SILL.
7. INSIDE FACE OF CORNER CMU AT ALL WINDOWS AND DOORS TO BE SMOOTH FACE, TYPICAL.

No.	DATE	BY
4		
3		
2		
1		

ZECK BUTLER ARCHITECTS PS
The Paulsen Center 421 W Riverside Suite 220 Spokane WA 99201 t. 509 . 456 . 8236 f. 509 . 747 . 0570
e www.zeckbutler.com

SHEET TITLE: EXTERIOR ELEVATIONS - SHOP BUILDING

PROJECT TITLE: GRANT COUNTY PUBLIC WORKS DEPARTMENT
ROAD DISTRICT NO. 3 SHOP FACILITY
QUINCY, WASHINGTON

SEAL: 6829 REGISTERED ARCHITECT WILLIAM ARTHUR FROEMKE STATE OF WASHINGTON

DATE	7/12/04
DRAWN	WAF/TG
CHECKED	WAF/RFW
PROJECT NUMBER	0415
DRAWING NO.	A3.1

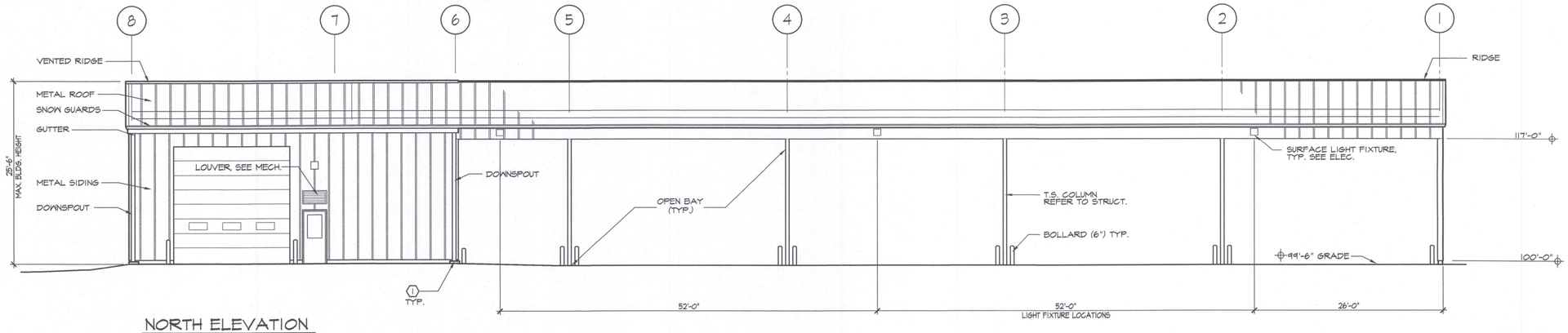

NORTH ELEVATION

SCALE: 1/8" = 1'-0"

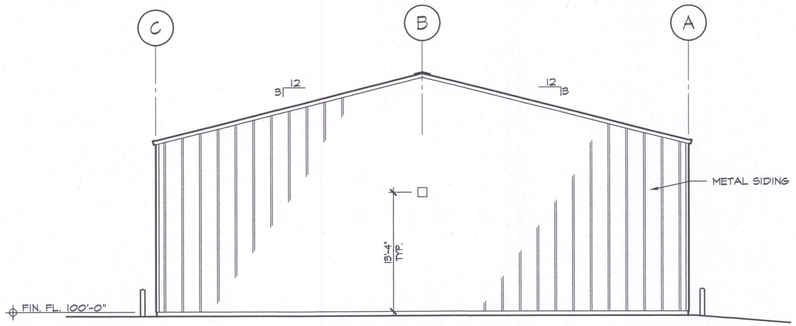

WEST ELEVATION

SCALE: 1/8" = 1'-0"

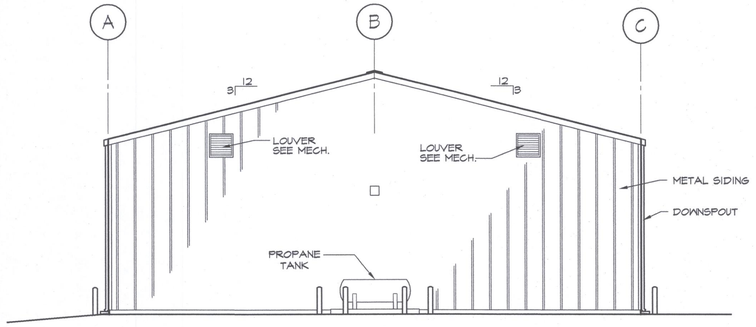

EAST ELEVATION

SCALE: 1/8" = 1'-0"

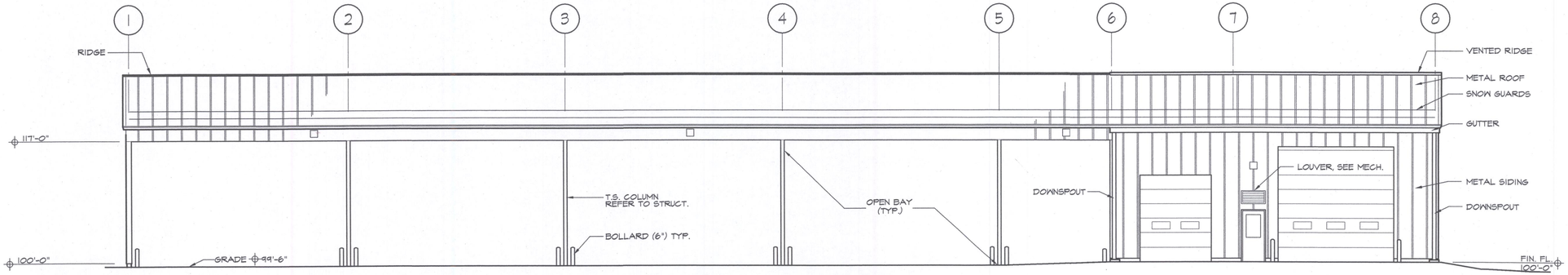

SOUTH ELEVATION

SCALE: 1/8" = 1'-0"

KEYED CONSTRUCTION NOTES

1. CONCRETE SPLASHBLOCK TO BE TURNED TO SIDE SO WATER WILL NOT RUN ONTO CONCRETE APRON.

No.	DATE	BY
4		
3		
2		
1		

ZECK BUTLER ARCHITECTS PS

The Poulsen Center 421 W Riverside Suite 220 Spokane WA 99201 t 509 . 456 . 8236 f 509 . 747 . 0570
e www.zeckbutler.com

SHEET TITLE: EXTERIOR ELEVATIONS - VEHICLE STORAGE BUILDING

PROJECT TITLE: GRANT COUNTY PUBLIC WORKS DEPARTMENT
ROAD DISTRICT NO. 5 SHOP FACILITY
QUINCY, WASHINGTON

SEAL: 6829 REGISTERED ARCHITECT WILLIAM ARTHUR FROEMKE STATE OF WASHINGTON

DATE	7/12/04
DRAWN	WAF/TG
CHECKED	WAF/RFW
PROJECT NUMBER	0415
DRAWING NO.	A3.2

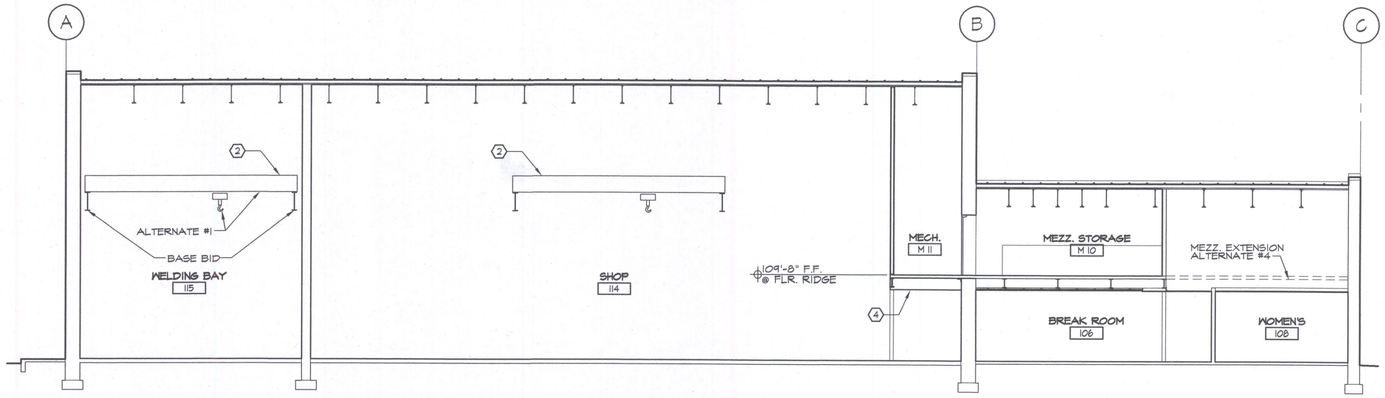

(A) BUILDING SECTION

SCALE: 1/8" = 1'-0"

SHOP BUILDING

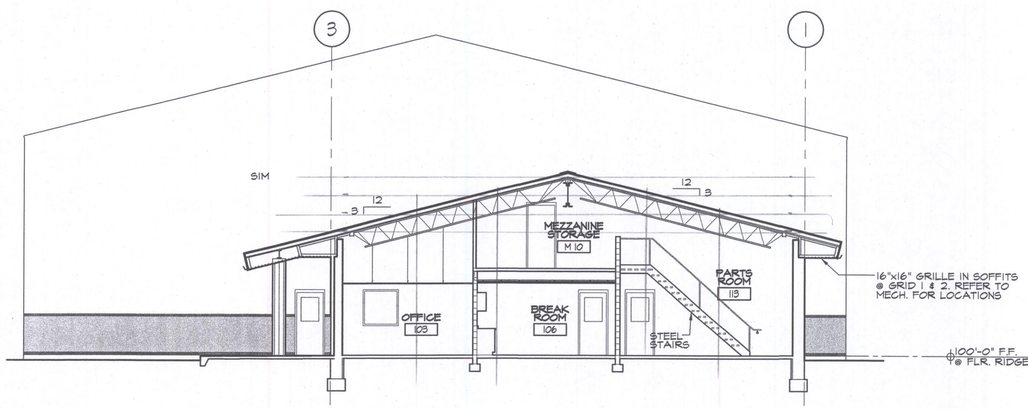

(B) BUILDING SECTION

SCALE: 1/8" = 1'-0"

SHOP BUILDING

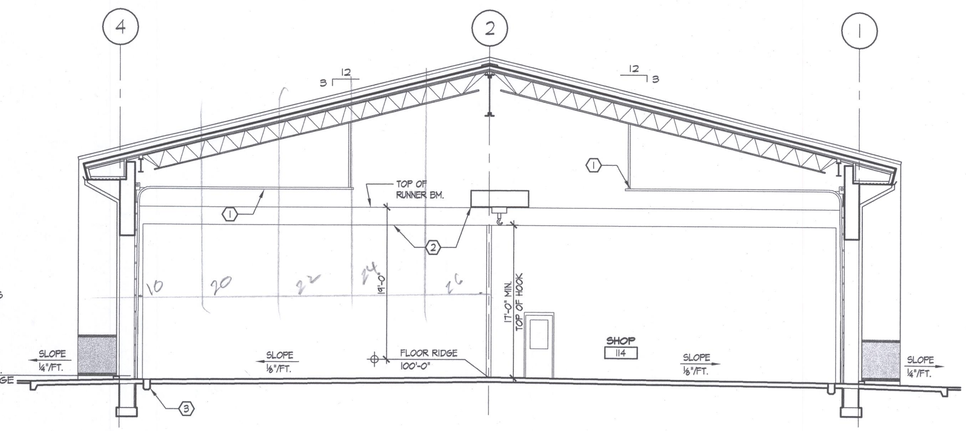

(C) BUILDING SECTION

SCALE: 1/8" = 1'-0"

SHOP BUILDING

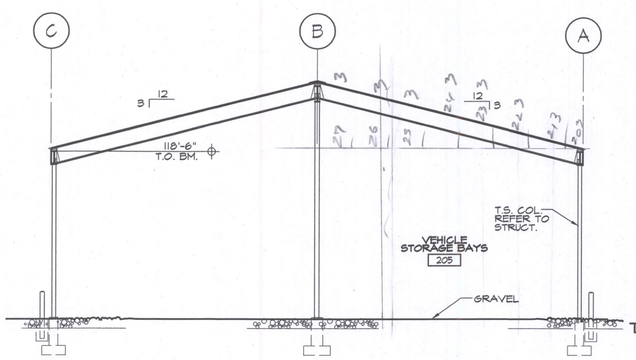

(D) BUILDING SECTION

SCALE: 1/8" = 1'-0"

VEHICLE STORAGE BUILDING

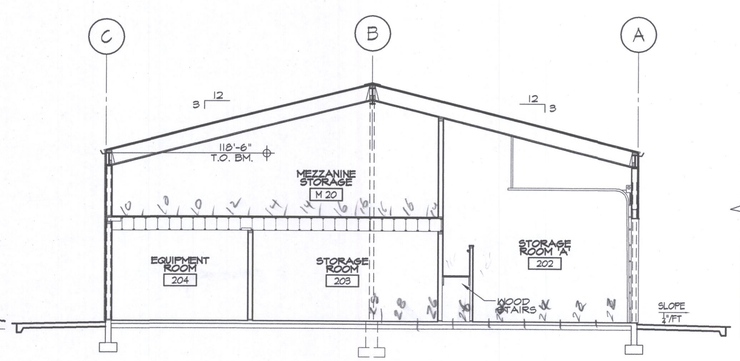

(E) BUILDING SECTION

SCALE: 1/8" = 1'-0"

VEHICLE STORAGE BUILDING

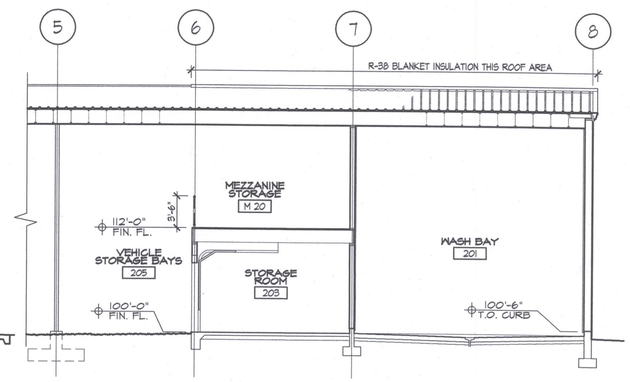

(F) BUILDING SECTION

SCALE: 1/8" = 1'-0"

VEHICLE STORAGE BUILDING

KEYED CONSTRUCTION NOTES

1. OVERHEAD DOOR TRACK TO BE MOUNTED W/ 4" MIN. CLEAR ABOVE ANY PORTION OF THE BRIDGE CRANE. ALL THE O.H DOORS TO BE MOUNTED AT THE SAME HEIGHT.
2. 5-TON OVERHEAD BRIDGE CRANE AND RUNNER BEAM. COORDINATE ALL CLEARANCE FOR CRANE TO OPERATE PROPERLY (O.H. DOORS, LIGHT FIXTURES, ETC.) AND ADJUST FIXTURES AS NECESSARY. CRANE HEIGHT TO REMAIN AS INDICATED.
3. TRENCH DRAIN AT EACH O.H. DOOR - REFER TO MECHANICAL DRAWINGS FOR DRAIN PIPE ROUTES.
4. ACOUSTICAL GWB CEILING UNDER MECHANICAL MEZZANINE.

No.	DATE	BY
4		
3		
2		
1		

ZECK BUTLER ARCHITECTS PS

ZBa

The Poulsen Center 421 W Riverside Suite 220 Spokane WA 99201 t 509 . 456 . 8236 f 509 . 747 . 0570
e www.zeckbutler.com

SHEET TITLE: BUILDING CROSS-SECTIONS

PROJECT TITLE: GRANT COUNTY PUBLIC WORKS DEPARTMENT
ROAD DISTRICT NO. 9 SHOP FACILITY
QUINCY, WASHINGTON

SEAL: 6829 REGISTERED ARCHITECT WILLIAM ARTHUR FROEMKE STATE OF WASHINGTON

DATE	7/12/04
DRAWN	RFW/WAF/TG
CHECKED	WAF/RFW
PROJECT NUMBER	0415
DRAWING NO.	A3.3

KEYED CONSTRUCTION NOTES

1. SEE STRUCTURAL FOR BEARING DETAIL.
2. CUT & FILL INSULATION BOARD FOR TIGHT FIT AROUND JOIST.
3. SEE STRUCTURAL FOR CONNECTION TO WALL.
4. SEE STRUCTURAL FOR HEAD CONNECTIONS TO WALL.
5. SEE ROOM FINISH SCHEDULE.
6. CONNECTION OF ALL CONCRETE APRONS AND SIDEWALKS NEXT TO BUILDINGS. ALTERNATE METHOD BY SETTING 24" #4 DOWELS @ 16" O.C. IN DRILLED HOLES (MIN. 4" DEPTH) W/ EPOXY ADHESIVES.

No.	DATE	BY
4		
3		
2		
1		

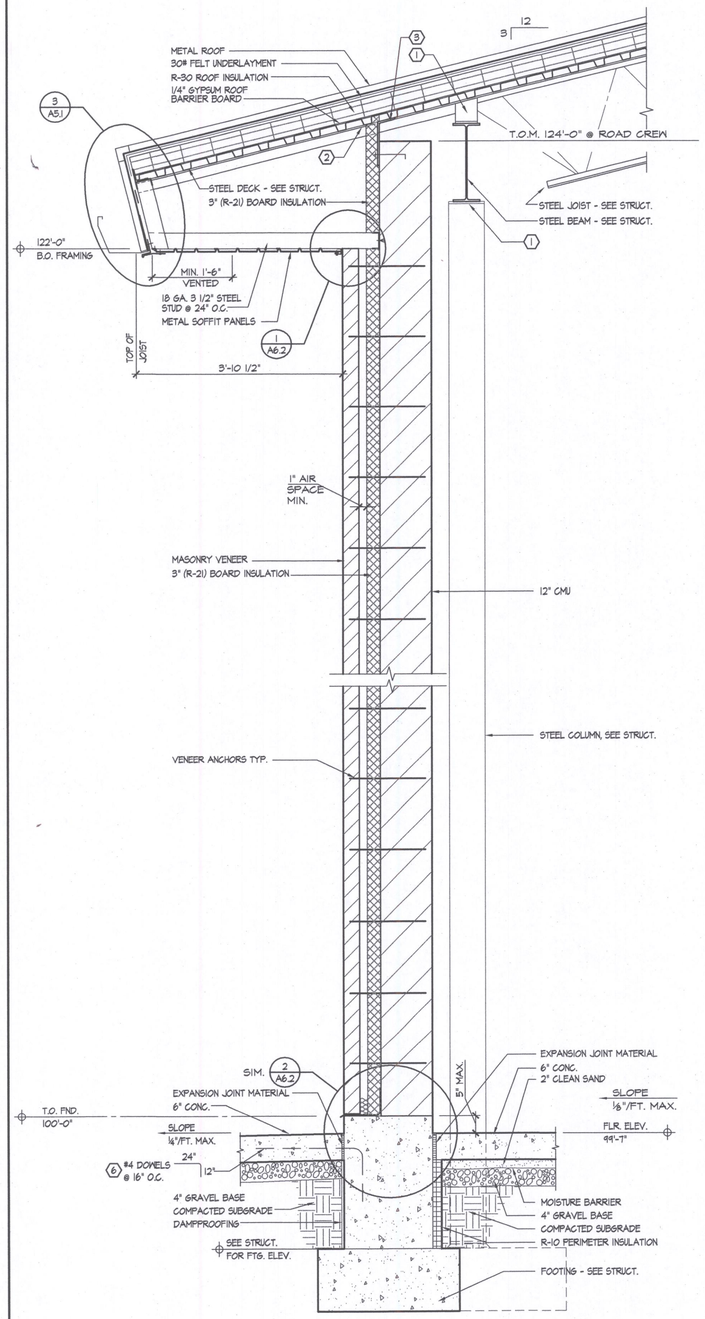

1 WALL SECTION - SHOP BUILDING
SCALE: 3/4"=1'-0"

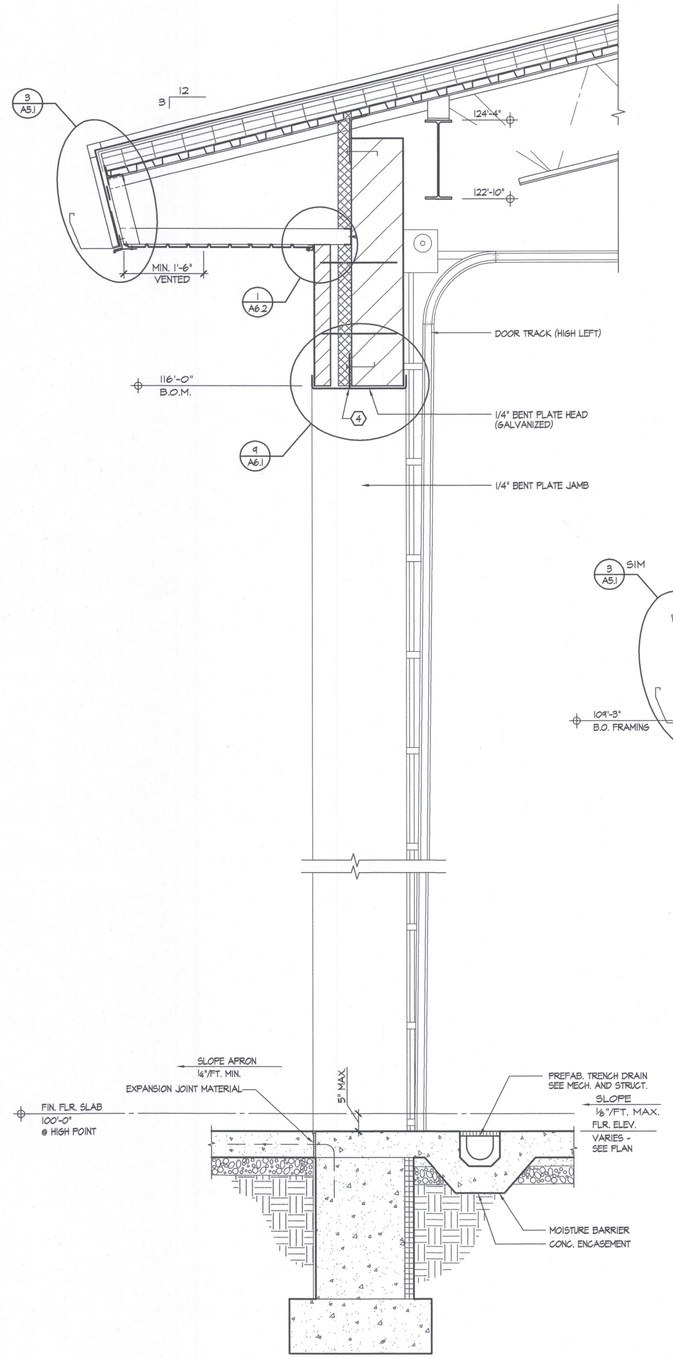

2 WALL SECTION - SHOP BUILDING
SCALE: 3/4"=1'-0"

REFER TO WALL SECTION 1/A4.1 FOR TYPICAL MATERIAL CALLOUTS AS RELATING TO THIS SECTION. DIFFERING CONDITIONS ARE NOTED ON THIS SECTION

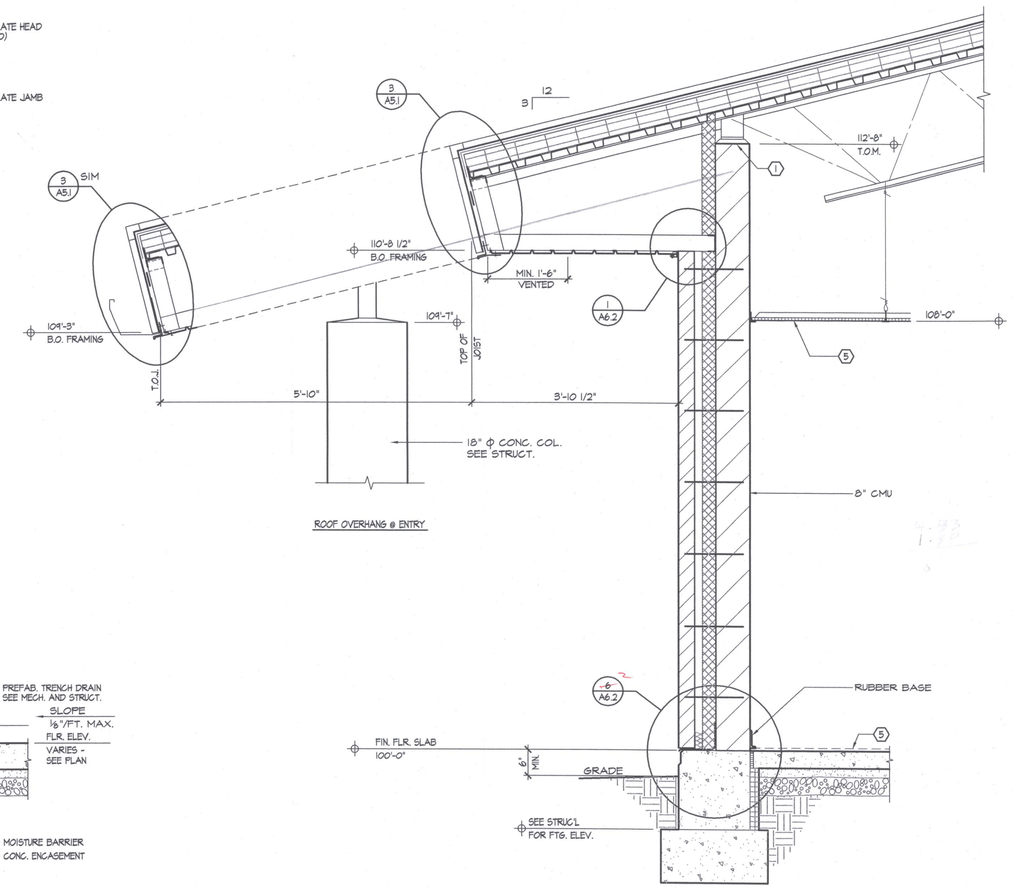

3 WALL SECTION - SHOP BUILDING
SCALE: 3/4"=1'-0"

REFER TO WALL SECTION 1/A4.1 FOR TYPICAL MATERIAL CALLOUTS AS RELATING TO THIS SECTION. DIFFERING CONDITIONS ARE NOTED ON THIS SECTION

ZECK BUTLER ARCHITECTS PS
The Paulsen Center 421 W Riverside Suite 220 Spokane WA 99201 t 509 . 456 . 8236 f 509 . 747 . 0570
© www.zeckbutler.com

SHEET TITLE: WALL SECTIONS

PROJECT TITLE: GRANT COUNTY PUBLIC WORKS DEPARTMENT
ROAD DISTRICT NO. 3 SHOP FACILITY
QUINCY, WASHINGTON

SEAL: 6829 REGISTERED ARCHITECT WILLIAM ARTHUR FROEMKE STATE OF WASHINGTON

DATE	7/12/04
DRAWN	WAF/SVG/TG
CHECKED	WAF/RFW
PROJECT NUMBER	0415
DRAWING NO.	A4.1

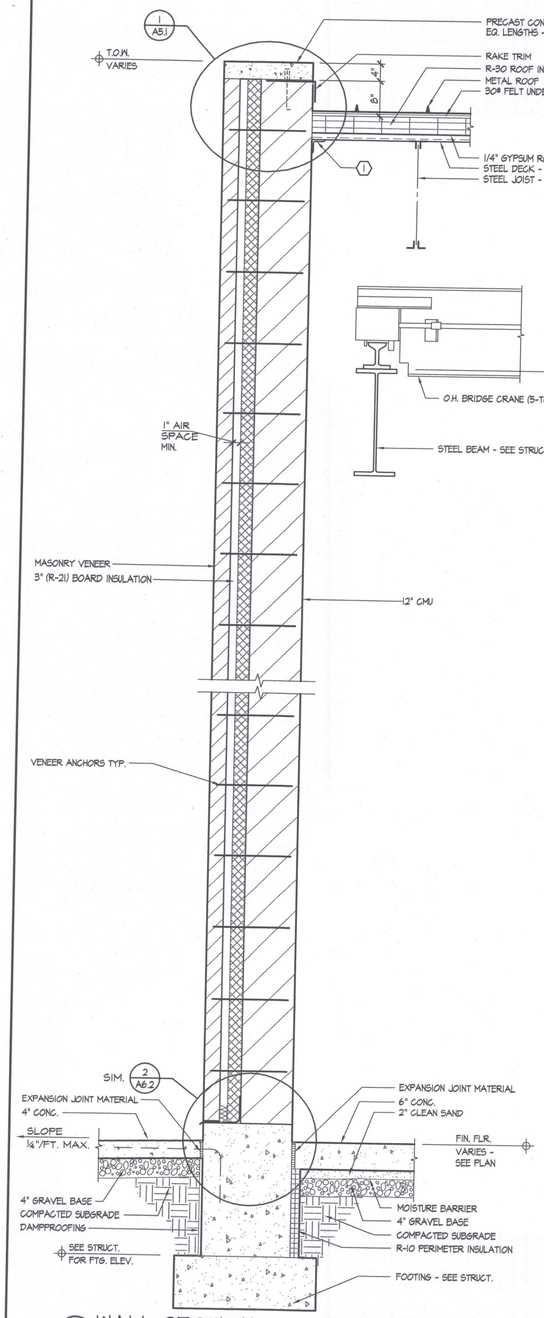

1 WALL SECTION-SHOP BUILDING
SCALE: 3/4"=1'-0"

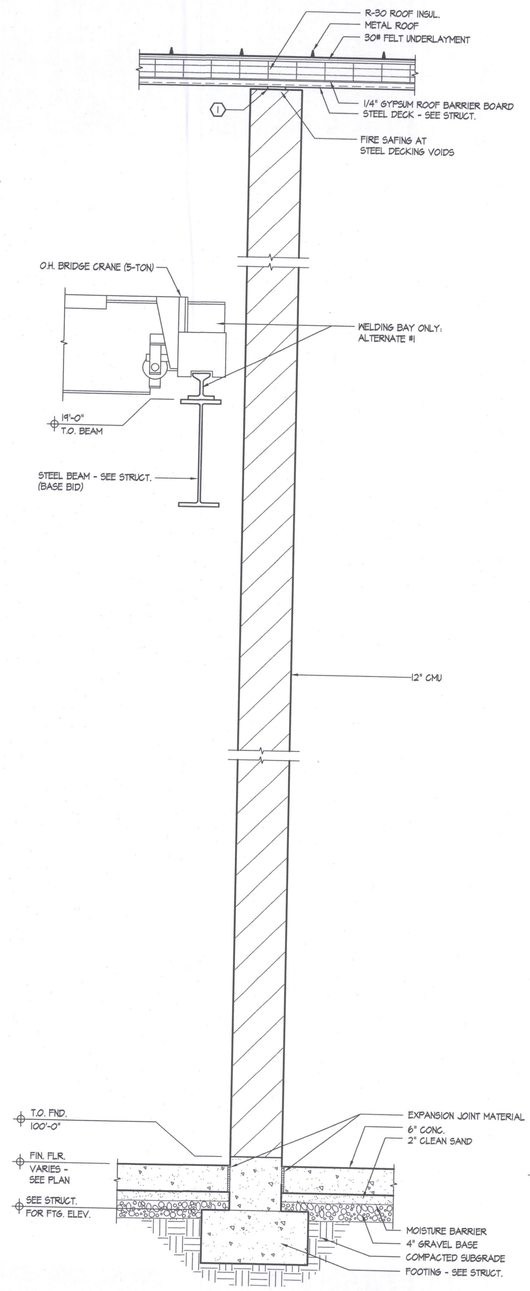

2 WALL SECTION-SHOP BUILDING
SCALE: 3/4"=1'-0"

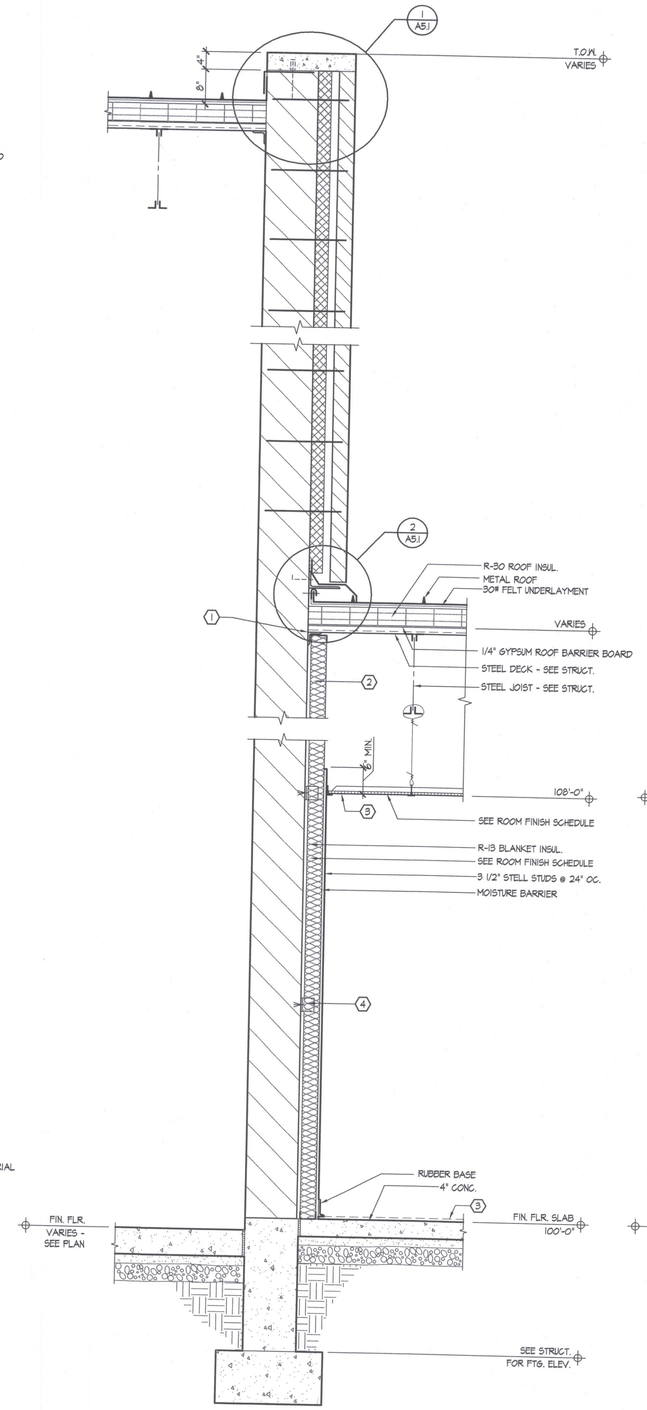

3 WALL SECTION-SHOP BUILDING
SCALE: 3/4"=1'-0"

REFER TO WALL SECTION 1/A4.2 FOR TYPICAL MATERIAL CALLOUTS AS RELATING TO THIS SECTION. DIFFERING CONDITIONS ARE NOTED ON THIS SECTION

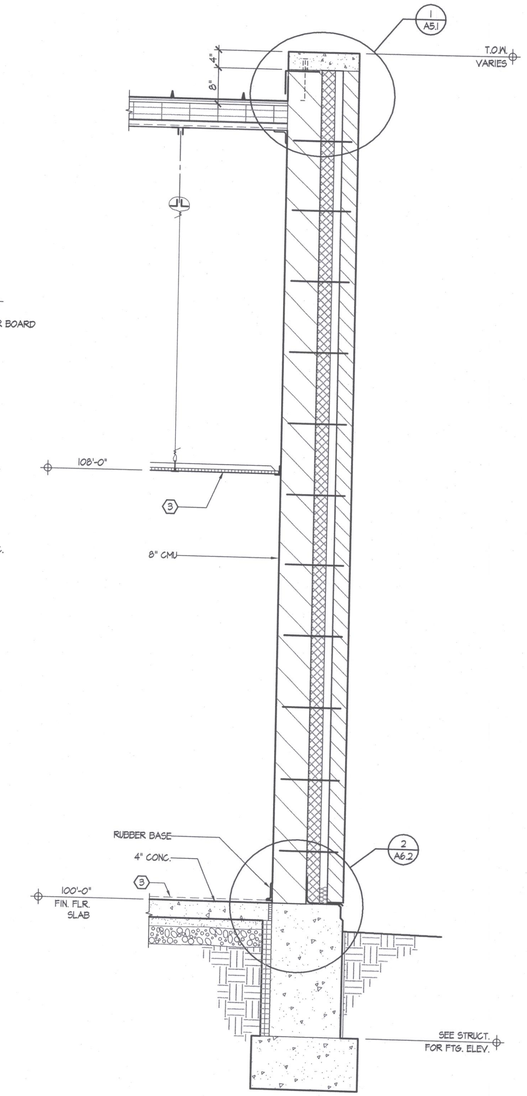

4 WALL SECTION-SHOP BUILDING
SCALE: 3/4"=1'-0"

REFER TO WALL SECTION 1/A4.2 FOR TYPICAL MATERIAL CALLOUTS AS RELATING TO THIS SECTION. DIFFERING CONDITIONS ARE NOTED ON THIS SECTION

KEYED CONSTRUCTION NOTES

1. SEE STRUCTURAL FOR BEARING DETAIL.
2. STUDS AMD INSULATION CARRIED TO STRUCT. IN ATTIC SPACE.
3. SEE ROOM FINISH SCHEDULE.
4. SECURE WALL STUD FRAMING TO MASONRY WALL W/3"x3"x20 GA. CLIP ANGLES @ 48" O.C. (MAX.) VERT. & HORIZ.

No.	DATE	BY
4		
3		
2		
1		

ZECK BUTLER ARCHITECTS PS
ZBa
The Pavilion Center 421 W Riverside Suite 220 Spokane WA 99201 t 509 . 456 . 8236 f 509 . 747 . 0270
e www.zeckbutler.com

SHEET TITLE: WALL SECTIONS

PROJECT TITLE: GRANT COUNTY PUBLIC WORKS DEPARTMENT
ROAD DISTRICT NO. 3 SHOP FACILITY
QUINCY, WASHINGTON

SEAL: 6829 REGISTERED ARCHITECT WILLIAM ARTHUR FROEMKE STATE OF WASHINGTON

DATE	7/12/04
DRAWN	WAF/SVG/TG
CHECKED	WAF/RFW
PROJECT NUMBER	0415
DRAWING NO.	A4.2

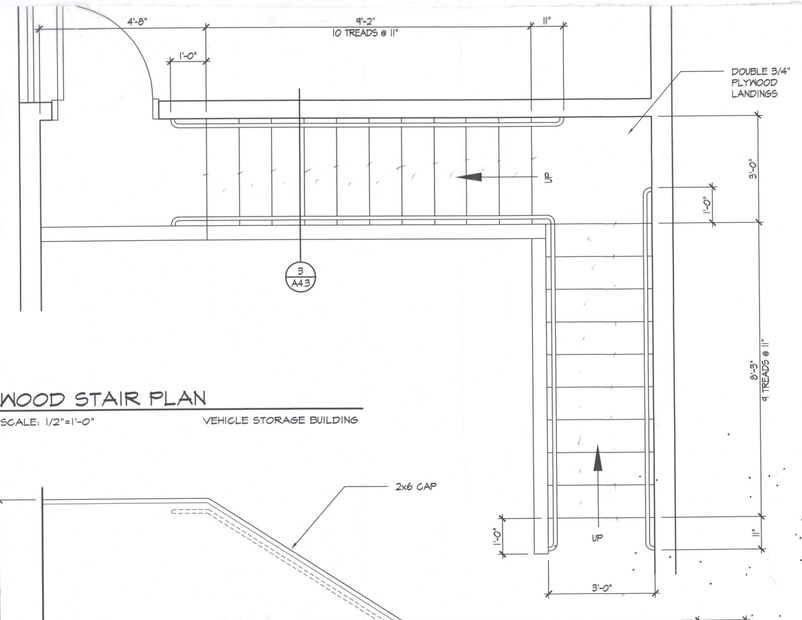

1 WOOD STAIR PLAN
SCALE: 1/2"=1'-0"
VEHICLE STORAGE BUILDING

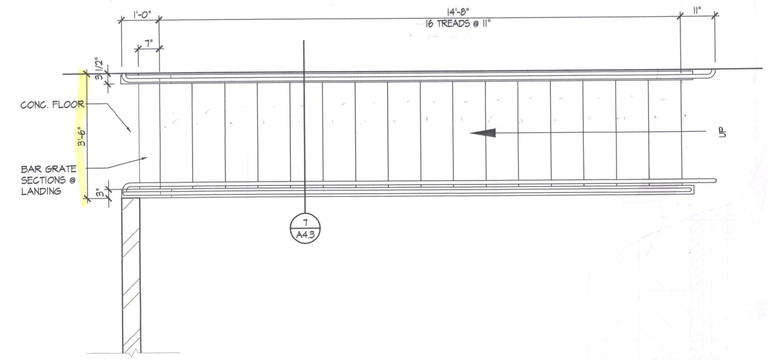

5 STEEL STAIR PLAN
SCALE: 1/2"=1'-0"
SHOP BUILDING

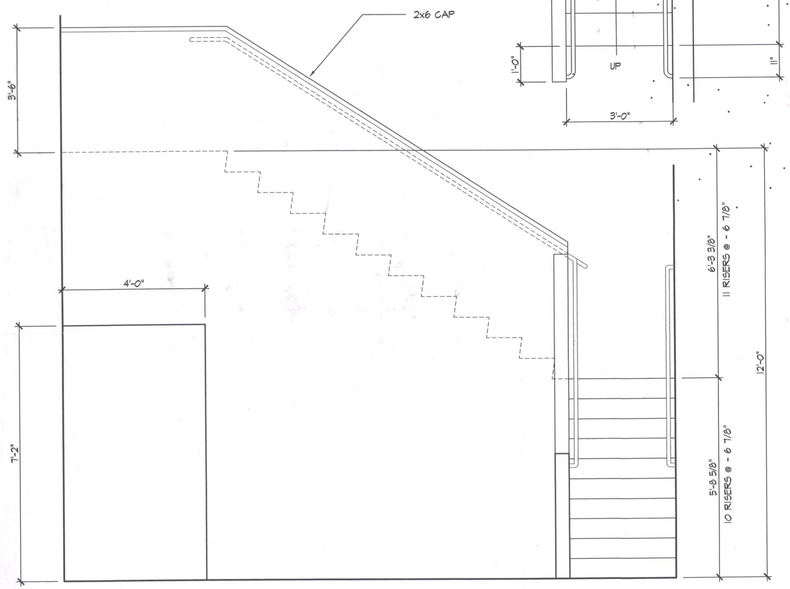

2 STAIR ELEVATION
SCALE: 1/2"=1'-0"
VEHICLE STORAGE BUILDING

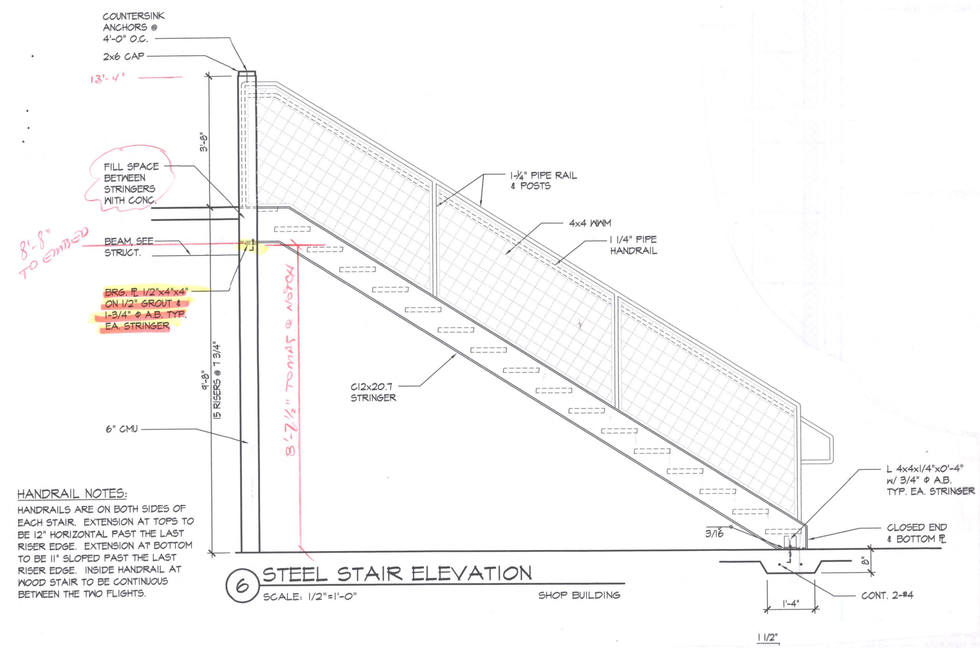

HANDRAIL NOTES:
HANDRAILS ARE ON BOTH SIDES OF EACH STAIR. EXTENSION AT TOPS TO BE 12" HORIZONTAL PAST THE LAST RISER EDGE. EXTENSION AT BOTTOM TO BE 11" SLOPED PAST THE LAST RISER EDGE. INSIDE HANDRAIL AT WOOD STAIR TO BE CONTINUOUS BETWEEN THE TWO FLIGHTS.

6 STEEL STAIR ELEVATION
SCALE: 1/2"=1'-0"
SHOP BUILDING

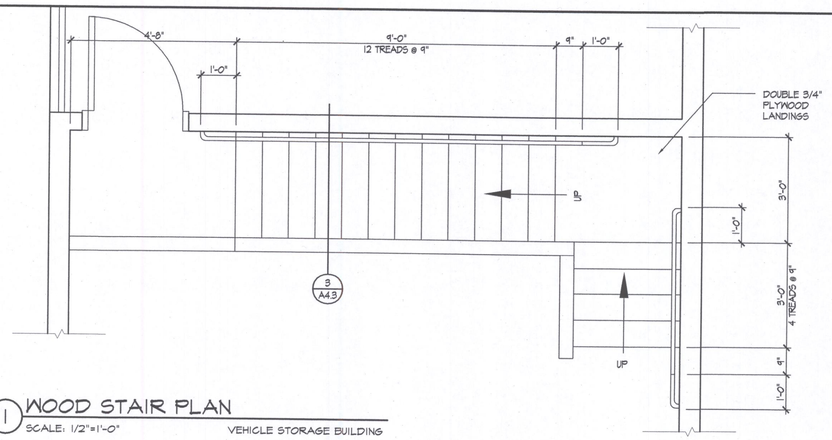

1 WOOD STAIR PLAN
SCALE: 1/2"=1'-0"
VEHICLE STORAGE BUILDING

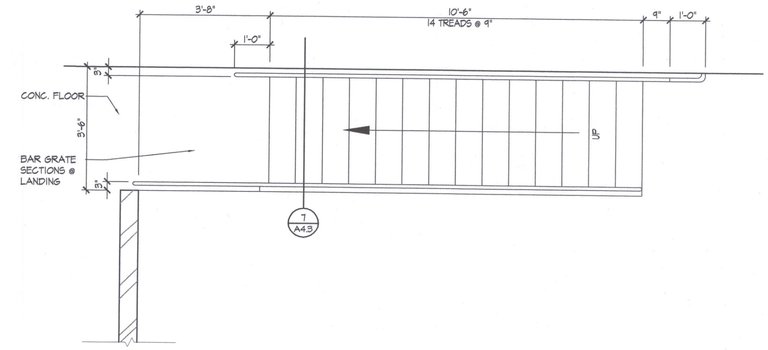

5 STEEL STAIR PLAN
SCALE: 1/2"=1'-0"
SHOP BUILDING

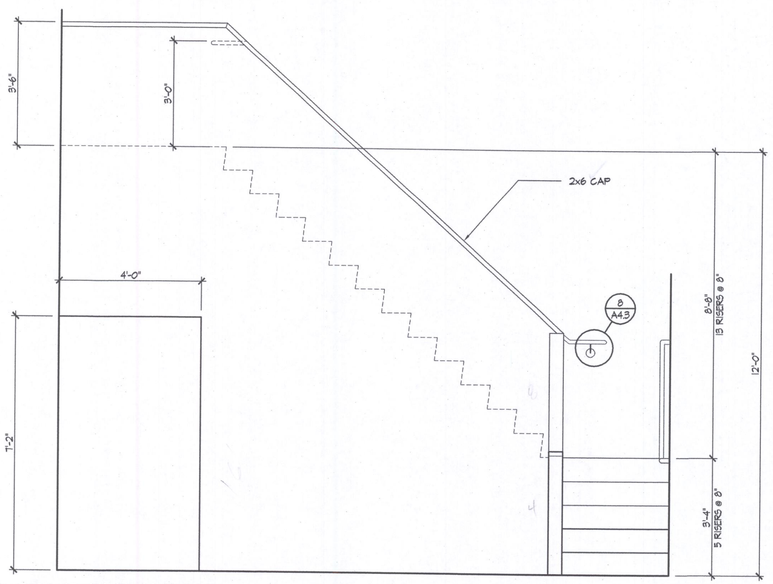

2 STAIR ELEVATION
SCALE: 1/2"=1'-0"
VEHICLE STORAGE BUILDING

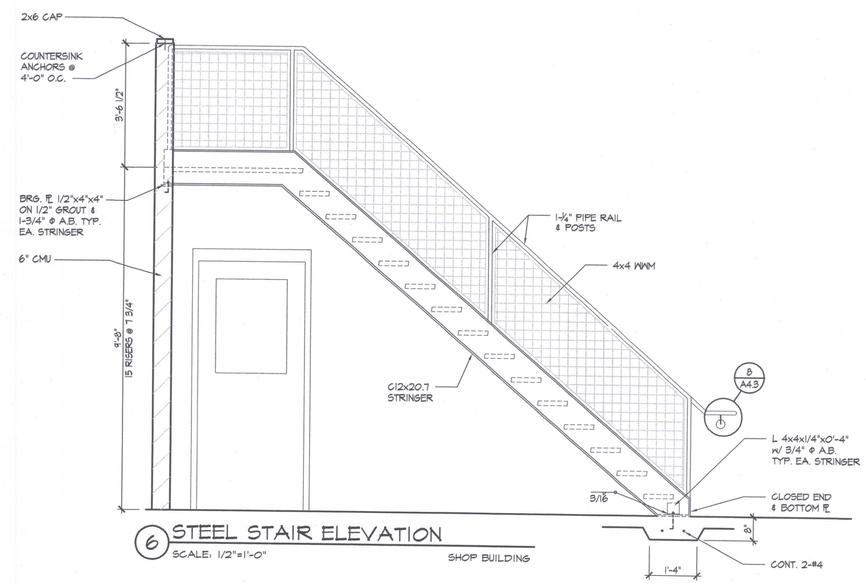

6 STEEL STAIR ELEVATION
SCALE: 1/2"=1'-0"
SHOP BUILDING

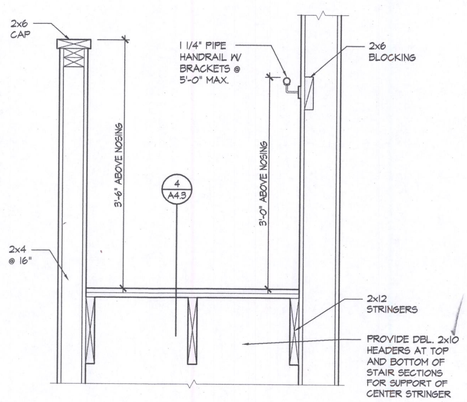

3 WOOD STAIR DETAIL
SCALE: 1"=1'-0"

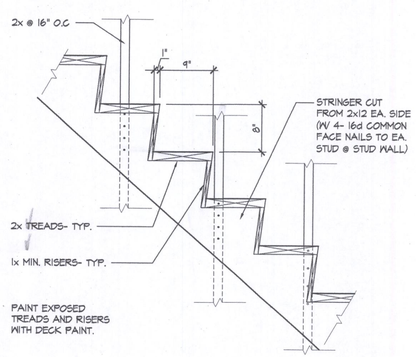

4 STAIR DETAIL
SCALE: 1"=1'-0"

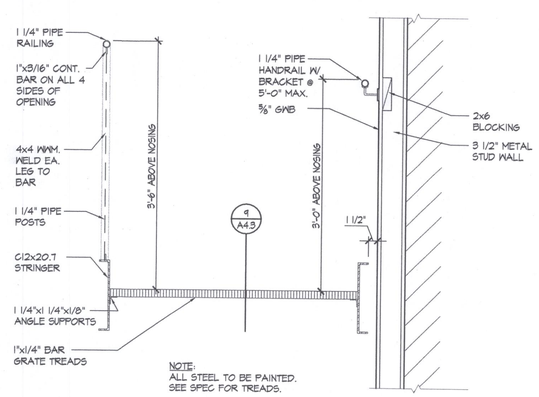

7 STEEL STAIR DETAIL
SCALE: 1"=1'-0"

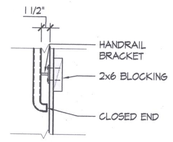

8 HANDRAIL DETAIL
SCALE: 1"=1'-0"

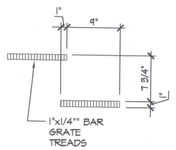

9 TREAD DETAIL
SCALE: 1"=1'-0"

KEYED CONSTRUCTION NOTES

NOTE: SEE CHANGES TO STAIR DESIGN DUE TO CODE CHANGE - 12/9/04

No.	DATE	BY
4		
3		
2		
1		

ZECK BUTLER ARCHITECTS PS
The Poulsen Center 421 W Riverside Suite 220 Spokane WA 99201 t 509 . 456 . 8236 f 509 . 747 . 0570
e www.zeckbutler.com

SHEET TITLE: STAIR PLANS & SECTIONS

PROJECT TITLE: GRANT COUNTY PUBLIC WORKS DEPARTMENT
ROAD DISTRICT NO. 3 SHOP FACILITY
QUINCY, WASHINGTON

SEAL: 6829 REGISTERED ARCHITECT WILLIAM ARTHUR FROEMKE STATE OF WASHINGTON

DATE	7/12/04
DRAWN	RFW/SVG/TG
CHECKED	WAF/RFW
PROJECT NUMBER	0415
DRAWING NO.	A4.3

½" FERRULL INSERT OK PER RFI #17

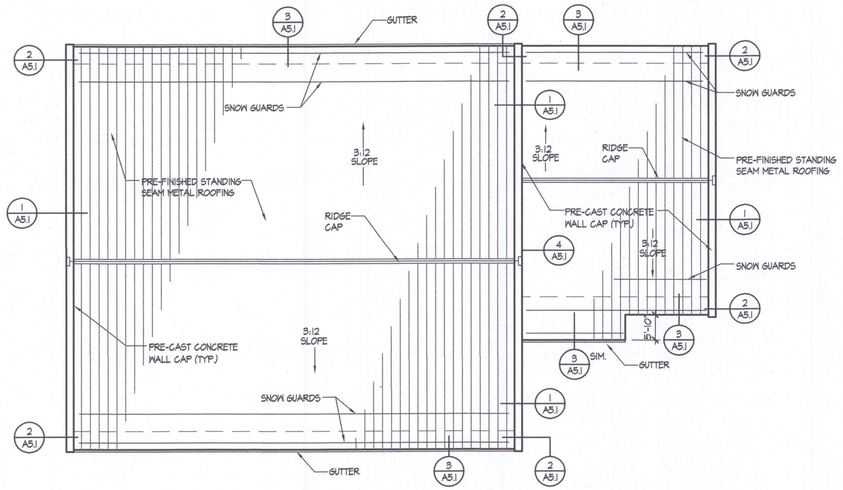

SHOP BUILDING-ROOF PLAN

SCALE: 1/16"=1'-0"

Item No. 8: Sheet A5.1 - Vehicle Storage Building Roof Plan:
Delete the note referring to Pre-finished standing seam Metal roofing on the Vehicle Storage building. The correct panels profiles are identified in Specification Section 07410, Paragraphs 2.6, 2.7 and 2.8.

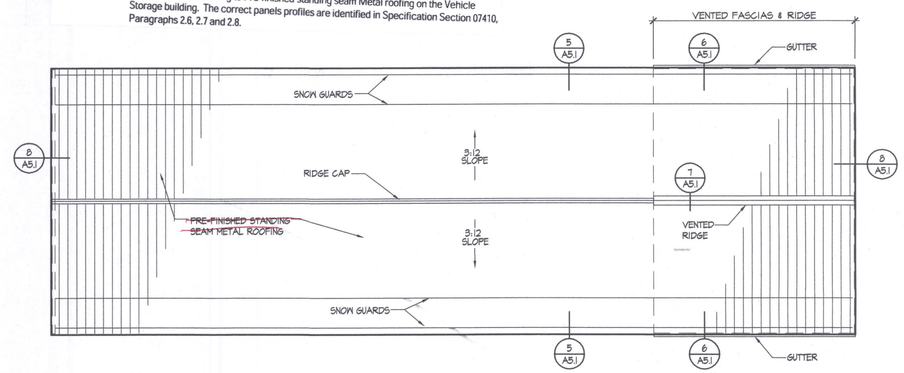

VEHICLE STORAGE BUILDING-ROOF PLAN

SCALE: 1/16"=1'-0"

KEYED CONSTRUCTION NOTES

1. 5/8"x8" ANCHOR PIN @ 16" O.C. (2-PER CONCRETE SECTION MIN.) SET INTO CONCRETE CAP WITH EPOXY ADHESIVE.
2. COPPER - FABRIC LAMINATED FLASHING IS TO BE PLACED OVER CMU AND EPDM FLASHING THEN LAID OVER CONTINUOUS ROOFING CLIP. COUNTER FLASHING COVERS COPPER - FABRIC LAMINATED FLASHING.
3. COPPER - FABRIC LAMINATED FLASHING OVER TOP OF COUNTER FLASHING TERMINATED AT OUTER EDGE OF CMU VENEER.
4. PROVIDE A 5 1/2" GAP @ 24" O.C. IN TOP OF 4x8 FOR ATTIC VENTILATION. GAP TO BE CENTERED BETWEEN TJI JOISTS.
5. PROVIDE A 5 1/2"x5 1/2" OPENING THRU PLYWOOD DECK FOR ATTIC VENTILATION.
6. PROVIDE A 10" GAP @ 24" O.C. BETWEEN 4x8 FOR ATTIC VENTING. GAP TO BE CENTERED BETWEEN TJI JOISTS.
7. PROVIDE A 2"x10" OPENING AT TOP OF PLYWOOD FOR ATTIC VENTING.

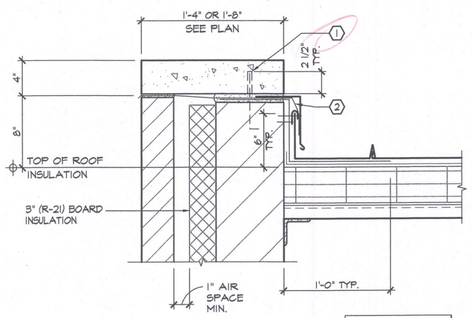

1 WALL CAP

SCALE: 1 1/2"=1'-0"

REFER TO DETAIL 2/A5.1 FOR OTHER MATERIAL CALLOUTS THAT ARE THE SAME.

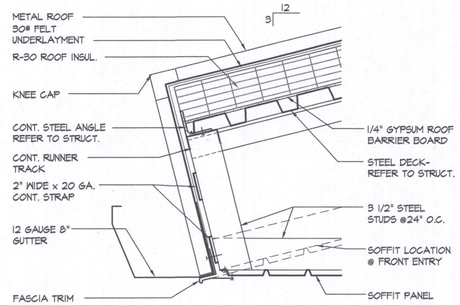

3 FASCIA DETAIL

SCALE: 1 1/2"=1'-0"

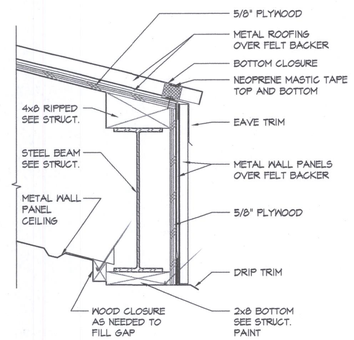

5 FASCIA DETAIL

SCALE: 1 1/2"=1'-0"

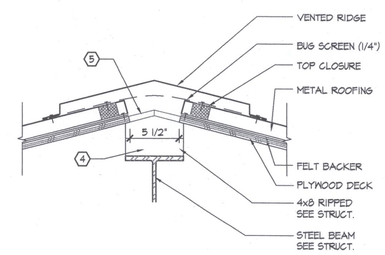

7 VENTED RIDGE

SCALE: 1 1/2"=1'-0"

Item No. 9: Sheet A5.1 - Details 5 & 6, Vented & Fascia Details:
Steel beam is located under TJI joist as shown on Detail 4, Sheet S2.5. Cover exposed side of interior face of beam with 5/8" sheathing that will be painted except in wash bay, finish with pre-finished metal flashing over the O.H. doors. Vented requirements will be similar to detail 6/A5.1.

Item No. 10: Sheet A5.1 - Detail 7, Ridge Beam (Similar):
Steel beam is located under TJI joists as shown on Detail 6, Sheet S2.5. At section indicated as "Vented" provide three (3) 1 1/2" diameter holes at the top of each TJI blocking from eave to ridge. On all exposed beams (total length) cover with 5/8" sheathing that will be painted. Venting requirements will be similar as needed in detail 7/A5.1.

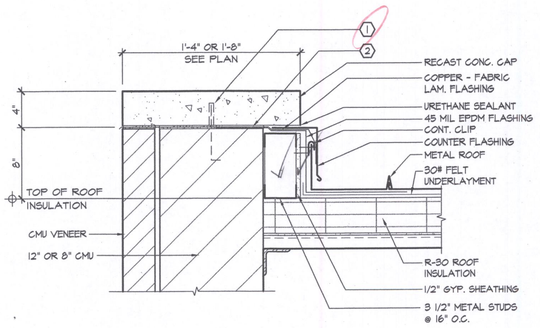

2 WALL CAP

SCALE: 1 1/2"=1'-0"

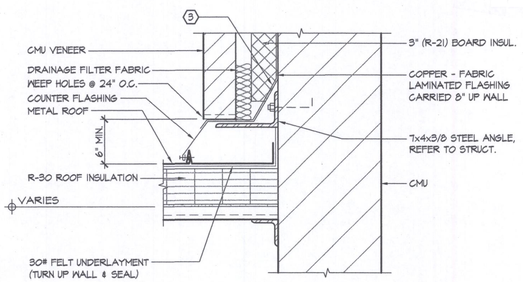

4 ROOF DETAIL

SCALE: 1 1/2"=1'-0"

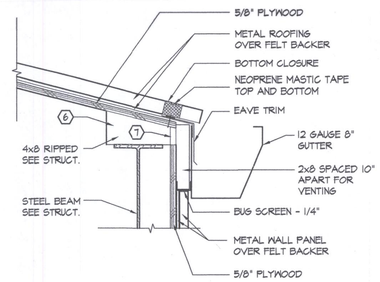

6 VENTED FASCIA

SCALE: 1 1/2"=1'-0"

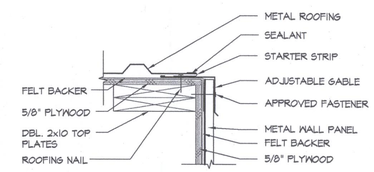

8 RAKE DETAIL

SCALE: 1 1/2"=1'-0"

No.	DATE	BY
4		
3		
2		
1		

ZECK BUTLER ARCHITECTS PS
The Paulsen Center 421 W Riverside Suite 220 Spokane WA 99201 t 509 . 456 . 8236 f 509 . 747 . 0570
© www.zeckbutler.com

SHEET TITLE: ROOF PLANS

PROJECT TITLE: GRANT COUNTY PUBLIC WORKS DEPARTMENT
ROAD DISTRICT NO. 3 SHOP FACILITY
QUINCY, WASHINGTON

SEAL: 6829 REGISTERED ARCHITECT WILLIAM ARTHUR FROEMKE STATE OF WASHINGTON

DATE	7/12/04
DRAWN	WAF/SVS/TG
CHECKED	WAF/RFW
PROJECT NUMBER	0415
DRAWING NO.	A5.1

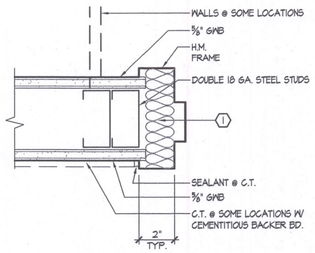

1 JAMB
SCALE: 3"=1'-0" HEAD SIM.

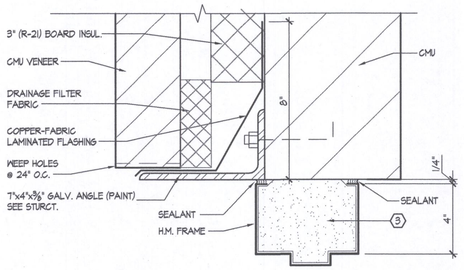

5 HEAD
SCALE: 3"=1'-0" HEAD SIM.

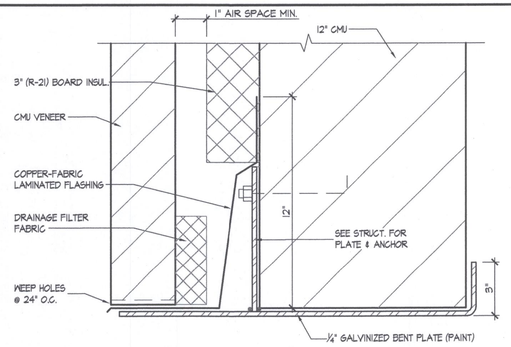

9 HEAD
SCALE: 3"=1'-0"

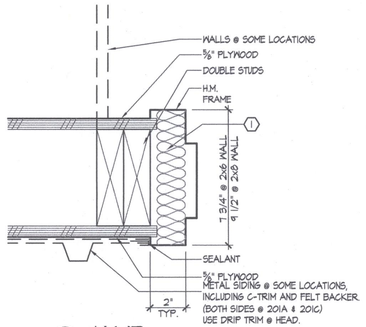

13 JAMB
SCALE: 3"=1'-0" HEAD SIM.

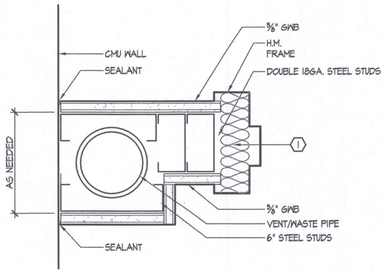

2 JAMB
SCALE: 3"=1'-0"

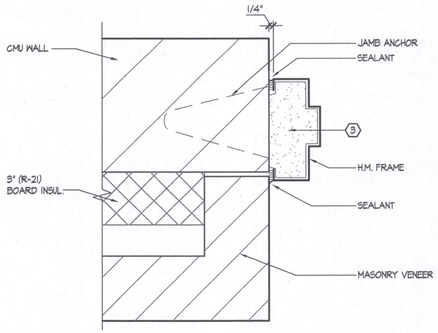

6 JAMB
SCALE: 3"=1'-0"

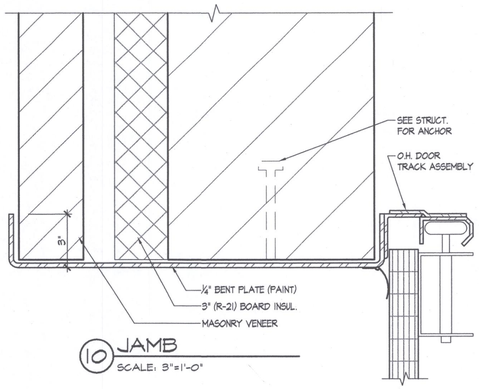

10 JAMB
SCALE: 3"=1'-0"

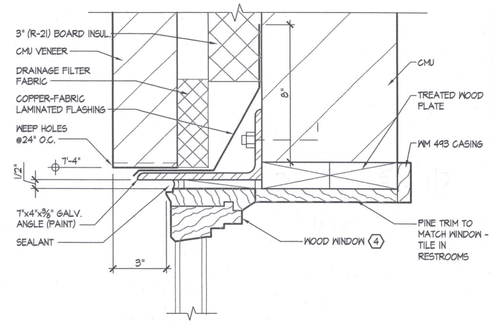

14 WINDOW HEAD
SCALE: 3"=1'-0"

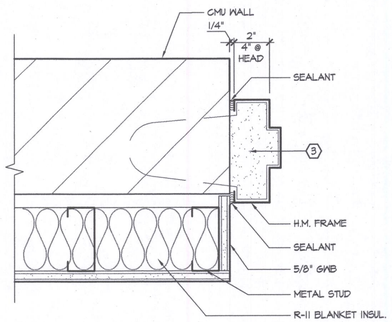

3 JAMB
SCALE: 3"=1'-0" HEAD SIM.

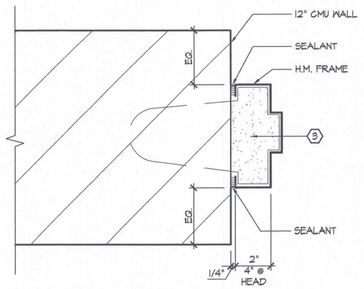

7 JAMB
SCALE: 3"=1'-0" HEAD SIM.

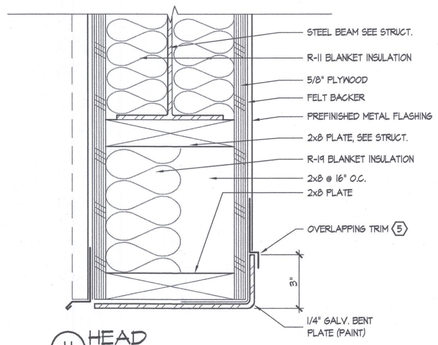

11 HEAD
SCALE: 3"=1'-0"

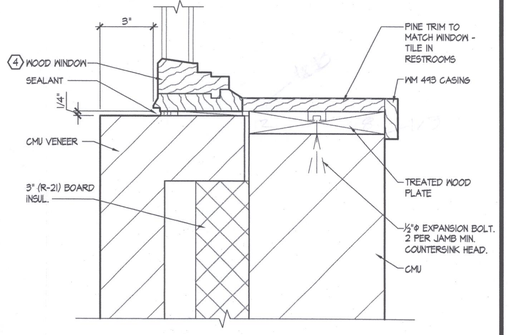

15 WINDOW JAMB
SCALE: 3"=1'-0"

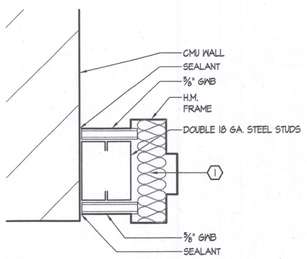

4 JAMB
SCALE: 3"=1'-0"

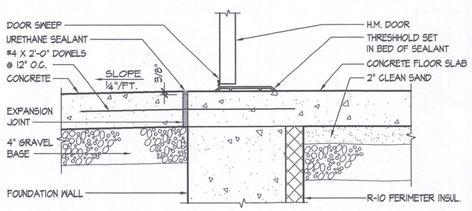

8 SILL
SCALE: 1-½"=1'-0"

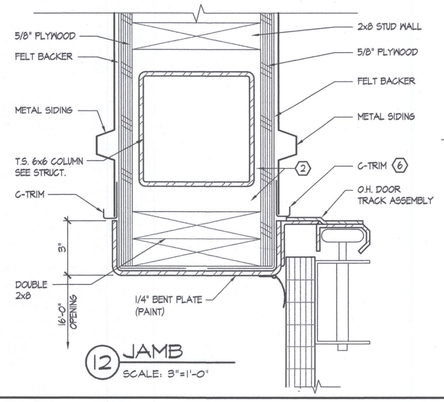

12 JAMB
SCALE: 3"=1'-0'

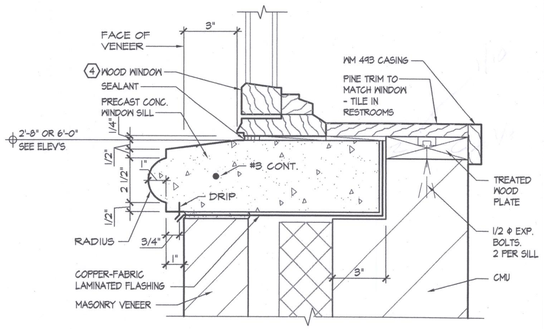

16 WINDOW SILL
SCALE: 3"=1'-0"

MATERIALS KEYING LEGEND

1. PACK WITH BLANKET INSULATION.
2. FILL WITH BLANKET INSULATION AS POSSIBLE
3. FRAME TO BE SET BEFORE MASONRY WORK AND FILL WITH GROUT.
4. ALTERNATE #3: CHANGE WINDOWS TO ALUMINUM. INTERIOR TRIM AND SILL REMAIN AS DETAILED. PROVIDE SEALANT JOINT BETWEEN ALUMINUM FRAME AND WOOD TRIM.
5. LOCATION OF OVERLAPPING TRIM TO BE COORDINATED WITH O.H. DOOR HEAD SO DOOR SYSTEM AND CLOSED DOOR WILL NOT BE HAMPERED BY FLASHING OR TRIM.
6. LOCATION OF C-TRIM TO BE COORDINATED WITH REQUIRED DEPTH OF OH. DOOR TRACK SYSTEM.

No.	DATE	BY
4		
3		
2		
1		

ZECK BUTLER ARCHITECTS PS
The Paulsen Center 421 W Riverside Suite 220 Spokane WA 99201 t 509 . 456 . 8236 f 509 . 747 . 0570
e www.zeckbutler.com

SHEET TITLE: DOOR DETAILS

PROJECT TITLE: GRANT COUNTY PUBLIC WORKS DEPARTMENT
ROAD DISTRICT NO. 3 SHOP FACILITY
QUINCY, WASHINGTON

SEAL: 6829 REGISTERED ARCHITECT
WILLIAM ARTHUR FROEMKE
STATE OF WASHINGTON

DATE	7/12/04
DRAWN	RSV/MTB/TG
CHECKED	WAF/RFW
PROJECT NUMBER	0415
DRAWING NO.	A6.1

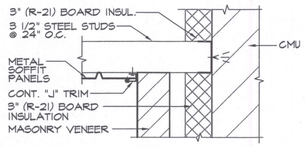

1 SOFFIT DETAIL
SCALE: 1 1/2"=1'-0"

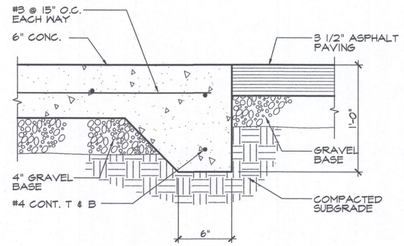

5 THICKEN EDGE DETAIL
SCALE: 1 1/2"=1'-0"

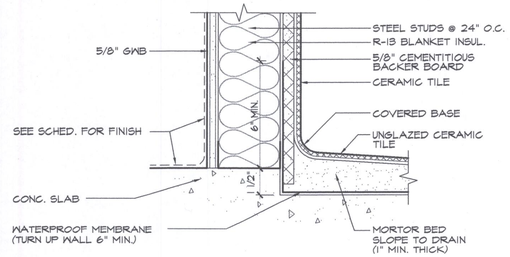

9 SHOWER RECEPTOR
SCALE: 3"=1'-0"

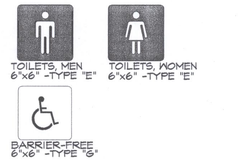

NOTE: 1. PROVIDE 1/32" RAISED OR INCISED GRAPHIC FOR TOILET ROOMS.
2. BLUE FIELD COLOR FOR BARRIER
3. REQUIRED BRAILLE CHARACTERS

13 TYPICAL PICTOGRAPHS
NOT TO SCALE

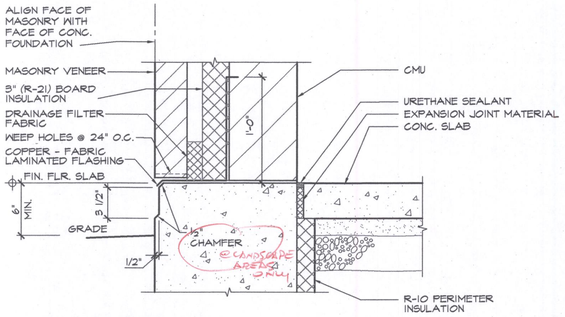

2 FOUNDATION
SCALE: 1 1/2"=1'-0"

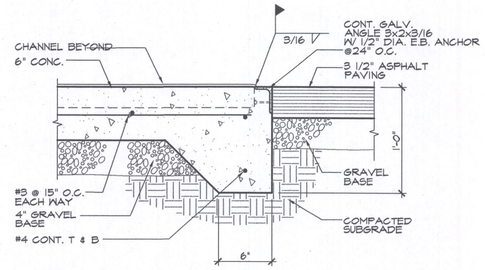

6 THICKENED EDGE DETAIL
SCALE: 1 1/2"=1'-0"

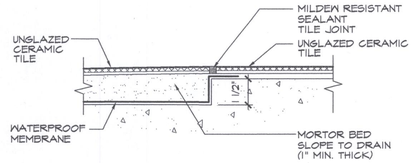

10 SHOWER TRANSITION
SCALE: 3"=1'-0"

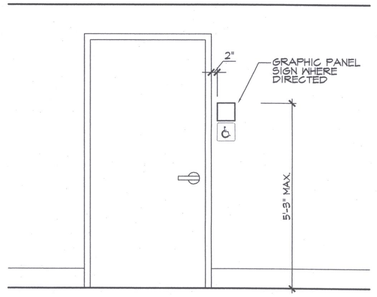

14 SIGN LOCATIONS
SCALE: 1/2"=1'-0"

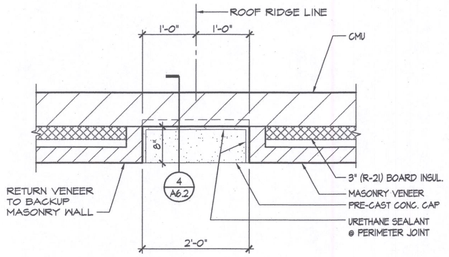

3 PLAN VIEW @ MASONRY REVEL
SCALE: 3/4"=1'-0"

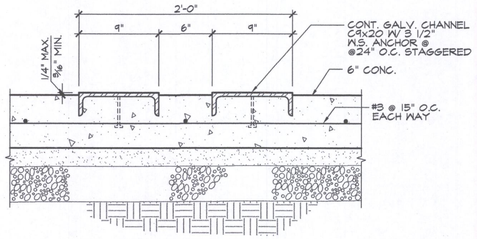

7 CAT TRACK DETAIL
SCALE: 1 1/2"=1'-0"

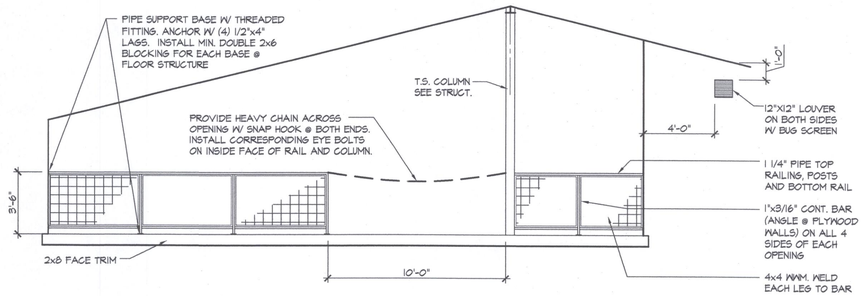

11 RAILING ELEVATION
SCALE: 1/4"=1'-0"

NOTE: ALL STEEL TO BE PAINTED

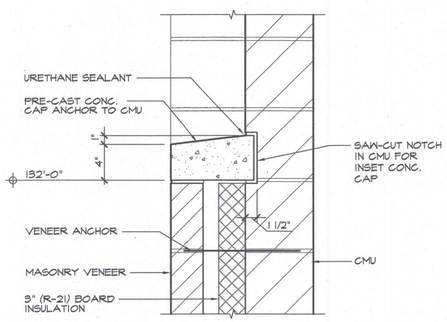

4 SECTION @ MASONRY REVEL
SCALE: 1 1/2"=1'-0"

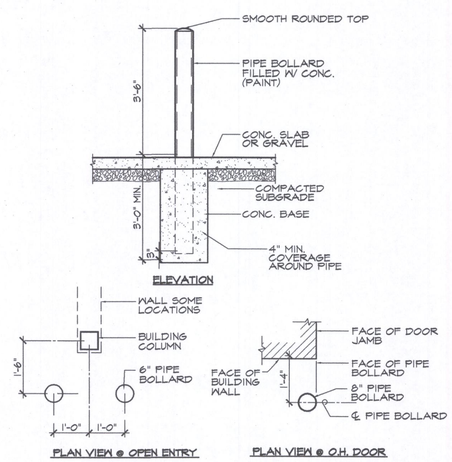

8 BOLLARD
SCALE: 1/2"=1'-0"

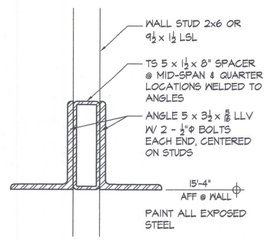

12 WASHBAY BOOM SUPPORT
SCALE: 3"=1'-0"

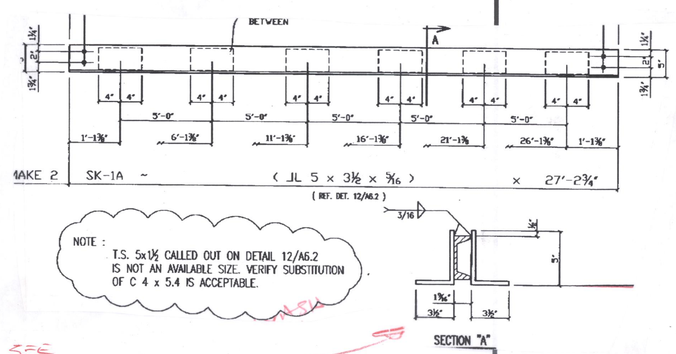

NOTE:
T.S. 5x1½ CALLED OUT ON DETAIL 12/A6.2 IS NOT AN AVAILABLE SIZE. VERIFY SUBSTITUTION OF C 4 x 5.4 IS ACCEPTABLE.

SEE CHANGE IN DESIGN

MATERIALS KEYING LEGEND

No.	DATE	BY
4		
3		
2		
1		

ZECK BUTLER ARCHITECTS PS
ZBa
The Pavilion Center 421 W Riverside Suite 220 Spokane WA 99201 t 509 . 456 . 8236 f 509 . 747 . 0570
e www.zeckbutler.com

SHEET TITLE: DETAILS

PROJECT TITLE: GRANT COUNTY PUBLIC WORKS DEPARTMENT
ROAD DISTRICT NO. 9 SHOP FACILITY
QUINCY, WASHINGTON

SEAL: 6829 REGISTERED ARCHITECT WILLIAM ARTHUR FROEMKE STATE OF WASHINGTON

DATE	7/12/04
DRAWN	SVG/TG
CHECKED	WAF/RFW
PROJECT NUMBER	0415
DRAWING NO.	A6.2

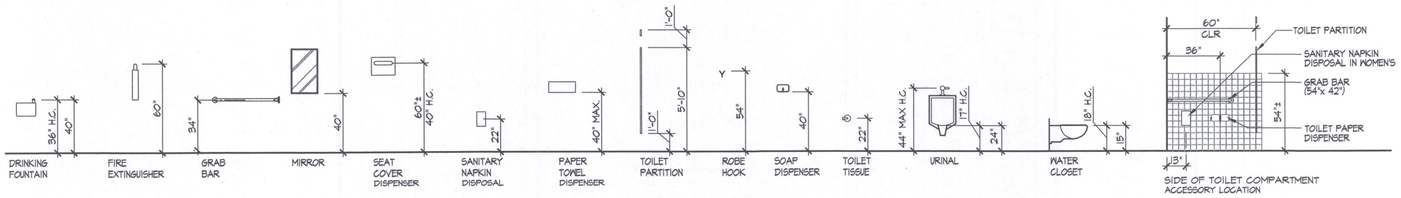

ACCESSORY MOUNTING HEIGHTS

SCALE: 1/4"=1'-0"

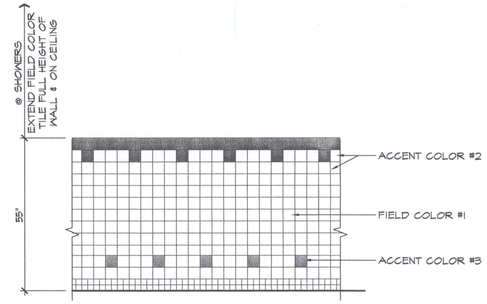

1 TYP. C.T. ACCENT PATTERN

SCALE: 1/2"=1'-0"

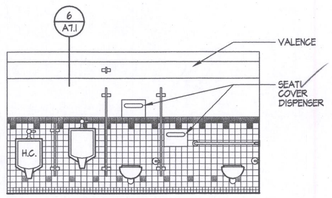

2 WEST ELEVATION

SCALE: 1/4"=1'-0" MEN'S RESTROOM

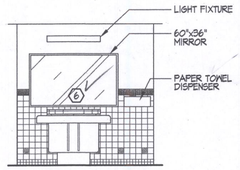

3 SOUTH ELEVATION

SCALE: 1/4"=1'-0" MEN'S RESTROOM

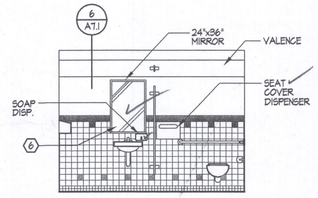

4 NORTH ELEVATION

SCALE: 1/4"=1'-0" WOMEN'S RESTROOM

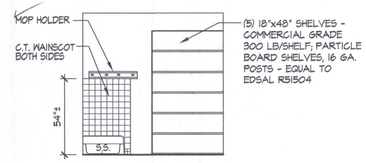

5 NORTH ELEVATION

SCALE: 1/4"=1'-0" JANITOR'S ROOM 107

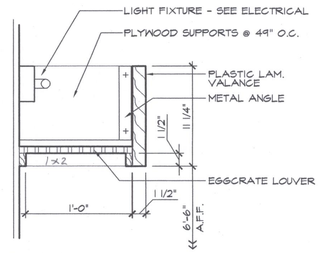

6 LIGHT VALANCE

SCALE: 1 1/2"=1'-0"

7 ELEVATION- KITCHENETTE

SCALE: 1/4"=1'-0" BREAK ROOM

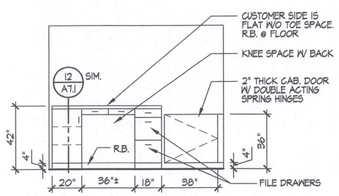

9 ELEVATION- RECEPTION DESK

SCALE: 1/4"=1'-0" RECEPTION ROOM

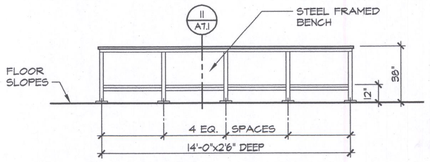

10 ELEVATION- SHOP BENCH

SCALE: 1/4"=1'-0"

3 EACH

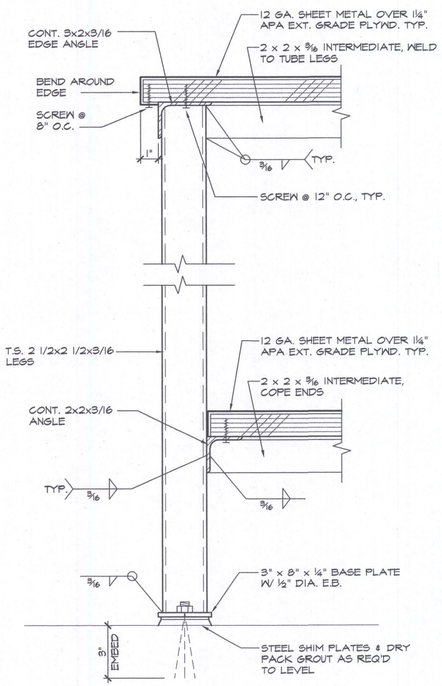

11 TYPICAL SHOP BENCH-ELEVATION

SCALE: 3"=1'-0"

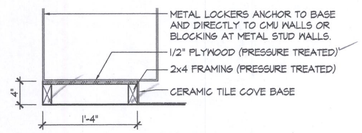

8 LOCKER BASE

SCALE: 1"=1'-0"

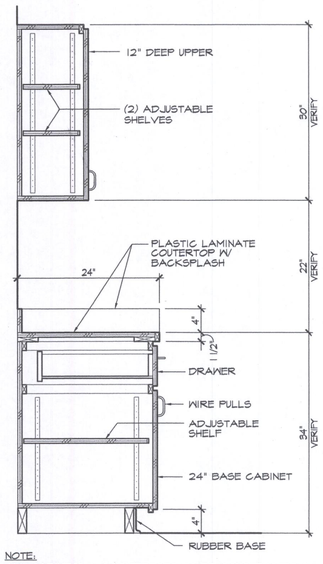

NOTE:
ALL CABINETS & COUNTERTOPS TO BE CONSTRUCTED IN COMPLIANCE WITH ANSI STANDARDS - SEE SPECIFICATION.

12 WALL & BASE CABINET

SCALE: 1"=1'-0"

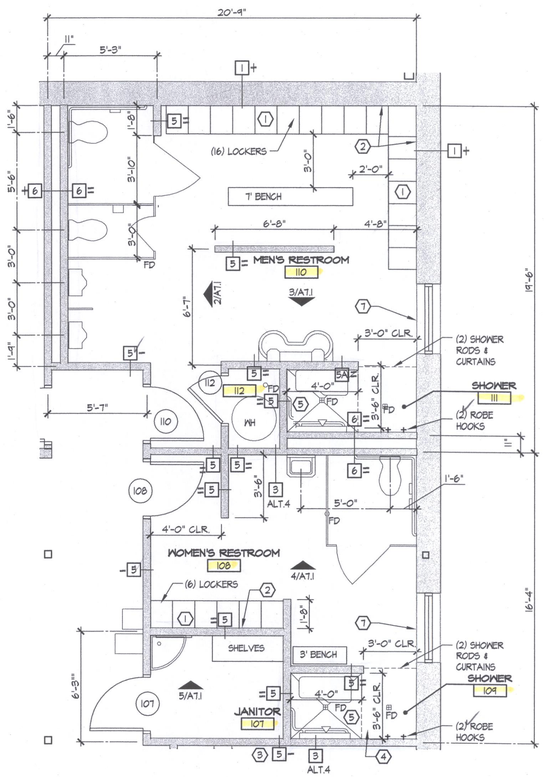

13 ENLARGED RESTROOM PLAN

SCALE: 1/4"=1'-0"

KEYED CONSTRUCTION NOTES

1. ALL LOCKERS TO SET ON BUILT CURB W/ CT BASE, REFER TO DETAIL 8/A7.1.
2. NO CT BEHIND LOCKERS.
3. 3" SOUND BATT INSULATION INSTALLED IN THIS WALL FROM FLOOR TO 6" ABOVE CEILING.
4. 3" SOUND BATT INSULATION OVER SHOWER AND DRYING AREA.
5. SHOWER AND DRY-OFF AREA HAVE 1-1/2" RECESS IN CONC. SLAB. SLOPE FLOOR TO (2) DRAINS WITH MUD-SET AND FINISHED TILE. WALL DETAIL TO BE 9/A6.2. FLOOR TRANSITION TO LOCKER ROOM TO BE 10/A6.2.
6. NO CT BEHIND MIRROR. CUT TILE AS NEEDED TO LEAVE A 1/4" JOIST BETWEEN MIRROR FRAME AND TILE EDGE. CAULK JOINT.
7. RECESSED OPENING FOR WINDOWS TO BE FINISHED WITH CT ON SILL, JAMBS & HEAD.

No.	DATE	BY
4		
3		
2		
1		

ZECK BUTLER ARCHITECTS PS
The Poulsen Center 421 W Riverside Suite 220 Spokane WA 99201 t 509 . 456 . 8236 f 509 . 747 . 0570
e www.zeckbutler.com

SHEET TITLE: BATHROOM DETAILS

PROJECT TITLE: GRANT COUNTY PUBLIC WORKS DEPARTMENT
ROAD DISTRICT NO. 3 SHOP FACILITY
QUINCY, WASHINGTON

SEAL: 6829 REGISTERED ARCHITECT WILLIAM ARTHUR FROEMKE STATE OF WASHINGTON

DATE	7/12/04
DRAWN	SVG/TG
CHECKED	WAF/RFW
PROJECT NUMBER	0415
DRAWING NO.	A7.1

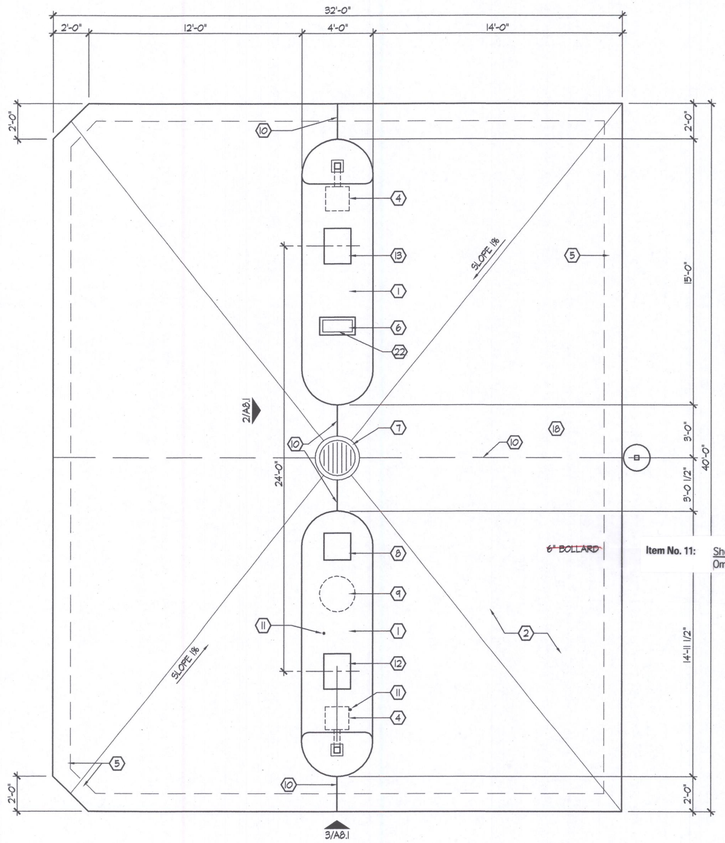

SEE CHANGES

Item No. 11: Sheet A8.1 - Fuel Island Plan: Omit any reference to 6" bollard.

NORTH

1 FUEL ISLAND PLAN
SCALE: ¼" = 1'-0"

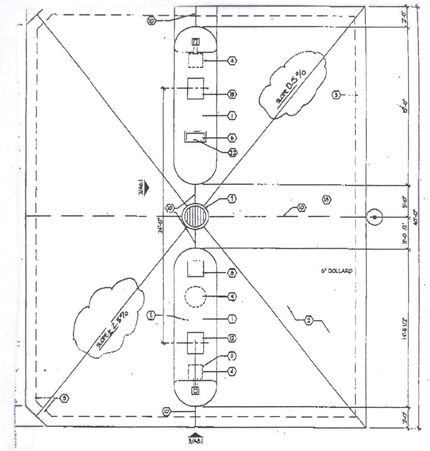

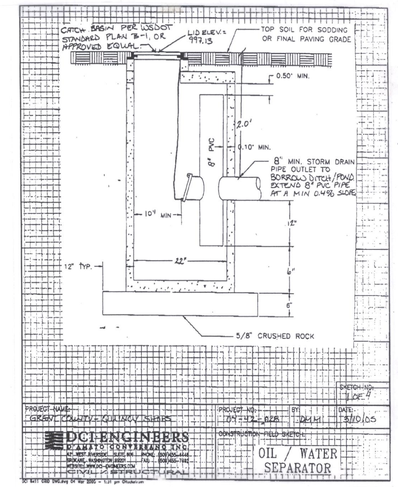

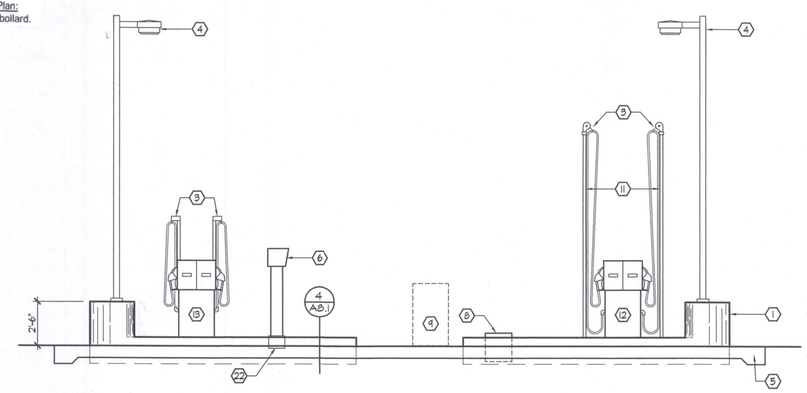

2 FUEL ISLAND ELEVATION
SCALE: ¼"=1'-0"

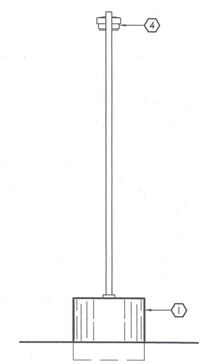

3 FUEL ISLAND ELEVATION
SCALE: ¼"=1'-0"

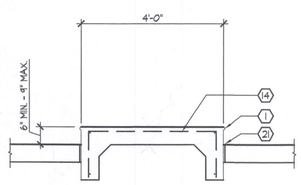

4 FUEL ISLAND SECTION
SCALE: ½"=1'-0"

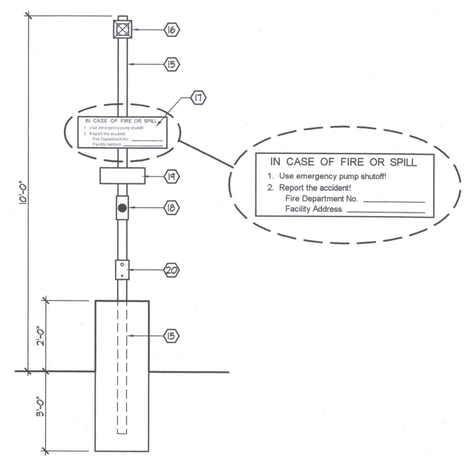

5 EMERGENCY STOP & ALARM DETAIL
SCALE: ½"=1'-0"

KEYED CONSTRUCTION NOTES

1. CONCRETE ISLAND WITH PREFABRICATED METAL FORM. SHOP PRIMED AND FIELD PAINTED.
2. 8" CONCRETE SLAB WITH #4 BARS @ 12" O.C. EA. WAY.
3. DISPENSING HOSES MUST RETRACT FULLY TO THE TOP OF EACH POST.
4. LIGHT FIXTURES, SEE ELECTRICAL.
5. 12" THICKENED EDGE.
6. KEY CONTROL READER - N.I.C.
7. CATCH BASIN. SEE CLARIFICATION!
8. AIR/WATER UNIT.
9. TRASH CAN (FURNISHED BY OWNER).
10. CONTROL JOINT, TYP.
11. 2" PIPE OR 2x2 TUBE STEEL WITH BASE FLANGE FOR HOSE RETRACTOR
12. DUAL DISPENSER WITH FACTORY FINISHED "GREEN" PANELS & 144" HOSE RETRACTOR FOR DIESEL FUEL.
13. DUAL DISPENSER WITH FACTORY FINISHED "RED" PANELS & 79" HOSE RETRACTOR FOR GASOLINE.
14. #4 BAR @ 24" O.C. EA. WAY WITH CONT. BARS TOP & BOTTOM.
15. TS 3x3 PRIMED AND PAINTED WITH WELDED TOP PLATE AND 18"ϕ CONCRETE BASE.
16. OVERFILL ALARM. ACTUAL LOCATION TO BE COORDINATED WITH FUEL SYSTEM REQUIREMENTS, AND SHOWN ON APPROVED SHOP DRAWINGS IF CHANGED.
17. EMERGENCY NOTIFICATION SIGN PER DETAIL.
18. EMERGENCY STOP SWITCH. NOTE: SECOND STOP SWITCH MOUNTED ON BUILDING WALL. REFER TO FLOOR PLAN FOR LOCATION.
19. EMERGENCY STOP SWITCH I.D. SIGN AT BOTH LOCATIONS.
20. OVERFILL ALARM ACKNOWLEDGEMENT SWITCH.
21. PETROLEUM RESISTANT EXPANSION JOINT MATERIAL.
22. PULL BOX AND COVER PLATE FOR KEY CONTROL READER (VERIFY WITH ELECTRICAL) WITH TERMINATING WIRING THAT HAS 12" EXCESS LENGHTS. BOX TO BE LARGE ENOUGH TO FIT AROUND ALL CONDUITS. LID OF BOX TO BE LOCKABLE WITH PADLOCK (FURNISHED BY OWNER) AND HEAVY GAUGE WITH PIANO HINGE SO THAT THE KEY CONTROL PEDASTAL CAN BE BOLTED TO THE TOP.

No.	DATE	BY
4		
3		
2		
1		

ZECK BUTLER ARCHITECTS PS
The Paulsen Center 421 W Riverside Suite 220 Spokane WA 99201 t 509 . 456 . 8235 f 509 . 747 . 0570
e www.zeckbutler.com

SHEET TITLE: FUEL ISLAND PLAN & DETAILS

PROJECT TITLE: GRANT COUNTY PUBLIC WORKS DEPARTMENT
ROAD DISTRICT NO. 3 SHOP FACILITY
QUINCY, WASHINGTON

SEAL: 6829 REGISTERED ARCHITECT WILLIAM ARTHUR FROEMKE STATE OF WASHINGTON

DATE	7/12/04
DRAWN	RSV/TG
CHECKED	WAF/RFW
PROJECT NUMBER	0415
DRAWING NO.	A8.1

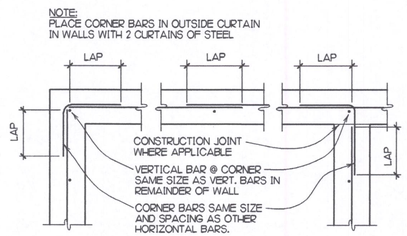

GRADE 60 REINFORCING			
BAR SIZE	#4	#5	#6
CONC. LAPS	20"	25"	30"
CMU LAPS	24"	30"	36"

04825_S001-01 **1** TYPICAL CMU OR CONCRETE WALL REINFORCING AT CORNERS AND INTERSECTING WALLS

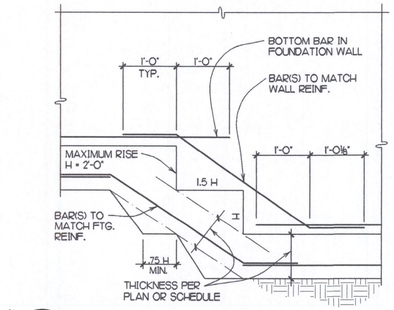

04825_S001-02 **2** TYPICAL STEPPED FOOTING

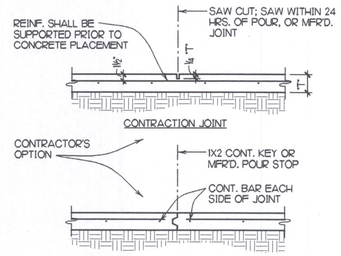

MAX. JT. SPACING = 25 FEET O.C.
MAX. SLAB AREA WITHIN JOINTS = 625 SQ. FT.

04825_S001-03 **3** TYPICAL SLAB JOINTS

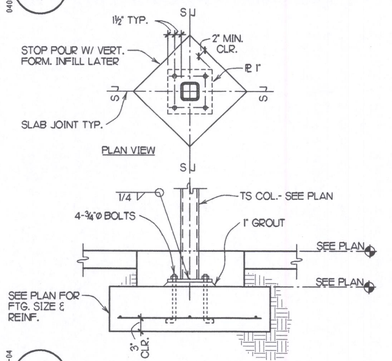

04825_S001-04 **4** TYPICAL COLUMN/FOOTING CONNECTION

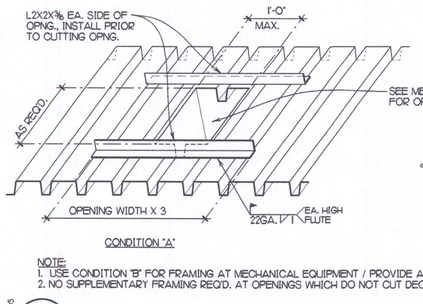

CONDITION "A"

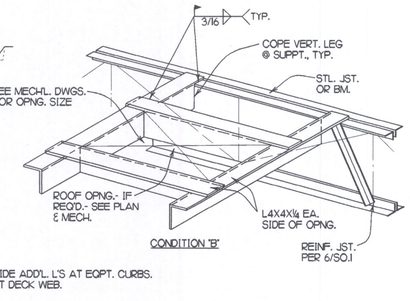

CONDITION "B"

NOTE:
1. USE CONDITION "B" FOR FRAMING AT MECHANICAL EQUIPMENT / PROVIDE ADD'L. L'S AT EQPT. CURBS.
2. NO SUPPLEMENTARY FRAMING REQ'D. AT OPENINGS WHICH DO NOT CUT DECK WEB.

04825_S001-05 **5** FRAMED OPENINGS IN METAL ROOF DECK AND MECHANICAL EQUIPMENT SUPPORT

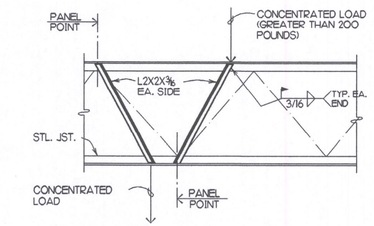

NOTE:
WHERE CONCENTRATED LOADS ARE SUPPORTED BY JOIST CHORDS AND ARE NOT LOCATED AT A PANEL POINT, REINFORCE JOIST FROM POINT OF LOAD TO OPPOSITE PANEL POINT AS SHOWN.

04825_S001-06 **6** TYPICAL JOIST REINFORCEMENT AT CONCENTRATED LOADS

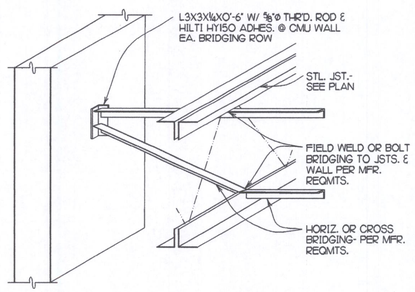

04825_S001-07 **7** TYPICAL BRIDGING ANCHOR TO WALLS

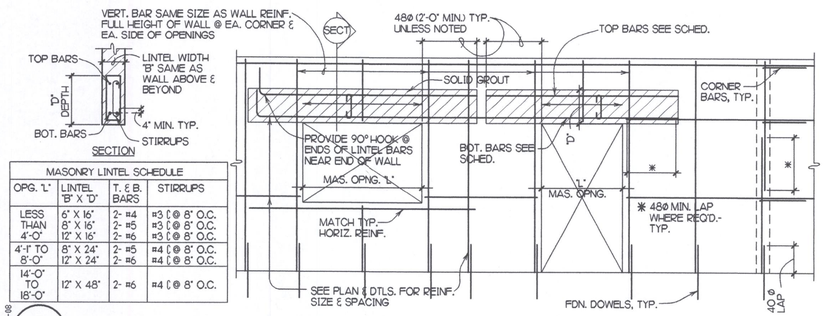

MASONRY LINTEL SCHEDULE			
OPG. 'L'	LINTEL 'B' X 'D'	T. & B. BARS	STIRRUPS
LESS THAN 4'-0"	6" X 16"	2- #4	#3 [@ 8" O.C.
	8" X 16"	2- #5	#3 [@ 8" O.C.
	12" X 16"	2- #6	#3 [@ 8" O.C.
4'-1" TO 8'-0"	8" X 24"	2- #5	#4 [@ 8" O.C.
	12" X 24"	2- #6	#4 [@ 8" O.C.
14'-0" TO 18'-0"	12" X 48"	2- #6	#4 [@ 8" O.C.

04825_S001-08 **8** TYPICAL MASONRY WALL OPENINGS AND REINFORCEMENT DETAILS
(SEE DETAILS FOR ADDITIONAL REINFORCEMENT AND LARGER OPENINGS)

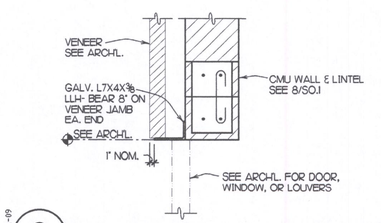

04825_S001-09 **9** TYPICAL VENEER LEDGER AT MASONRY WALL OPENINGS

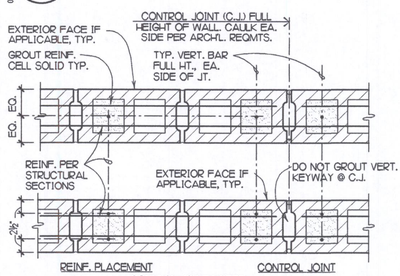

CONTROL JOINT NOTES:
1. CUT I HORIZ. BAR AT JOINT IN EACH BOND BEAM.
2. MAXIMUM JOINT SPACING 32'-0" UNLESS NOTED OTHERWISE, COORDINATE WITH ARCH'L.
3. PROVIDE JOINTS, FULL HEIGHT TO TOP OF CMU WALLS. SEE STRUCTURAL DWGS. FOR LOCATIONS.

04825_S001-10 **10** TYPICAL REINFORCEMENT PLACEMENT AND VERTICAL CONTROL JOINT IN MASONRY WALLS

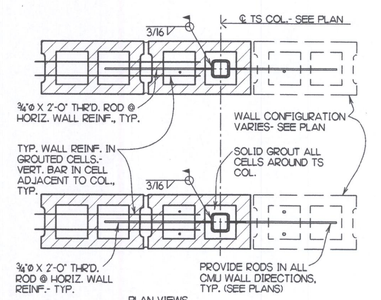

04825_S001-11 **11** TYPICAL COLUMN IN MASONRY WALL

STEEL FLOOR DECK FASTENING SCHEDULE		
1½" 22 GA. GALV. TYPE 'B' COMPOSITE STEEL FLOOR DECK		
I MIN. = 0.175 IN^4/FT.	S MIN. = 0.187 IN^3/FT.	
LOCATION	CONNECTION	REMARKS
END BRG. & INTERM. SUPPORTS	½" ø PUDDLE WELD 5 WELDS PER 36" SHEET (36")	MIN. END LAP = 2"
SIDE LAPS	BUTTON PUNCH @ 24"OC	
SHT. EDGES @ MARGINAL SUPPORTS	½" ø PUDDLE WELDS @ 18" O.C.	

04825_S001-12 **12**

GENERAL STRUCTURAL NOTES

GENERAL
THIS PROJECT SHALL CONFORM TO THE 1997 EDITION OF THE UNIFORM BUILDING CODE (UBC). USE DETAILS MARKED "TYPICAL" WHEREVER THEY APPLY. CHANGES ARE NOT PERMITTED WITHOUT WRITTEN APPROVAL OF THE ARCHITECT AND STRUCTURAL ENGINEER. CONTRACTOR SHALL VERIFY CONDITIONS AND DIMENSIONS IN THE FIELD AND NOTIFY THE ARCHITECT AND STRUCTURAL ENGINEER OF ANY DISCREPANCIES PRIOR TO PROCEEDING WITH THAT PORTION OF WORK. THE CONTRACTOR SHALL BE SOLELY RESPONSIBLE FOR CONSTRUCTION MEANS, METHODS, TECHNIQUES, SEQUENCES, PROCEDURES AND SAFETY, AND FOR COORDINATING ALL PORTIONS OF THE WORK.

SPECIAL INSPECTION
SPECIAL INSPECTION IN ACCORDANCE WITH UBC SECTION 1701, PERFORMED BY SPECIAL INSPECTORS APPROVED BY THE BUILDING OFFICIAL AND RETAINED BY THE OWNER, IS REQUIRED FOR THE FOLLOWING STRUCTURAL ITEMS: CONCRETE, REINFORCING STEEL, FIELD WELDING, INCLUDING DECK WELDING, HIGH STRENGTH BOLTING, STRUCTURAL MASONRY, GRADING AND STRUCTURAL FILL.
SPECIAL INSPECTION IS ALSO REQUIRED FOR THE FOLLOWING ITEMS: EXPANSION ANCHORS, ADHESIVE ANCHORS. SEE SPECIFIC SECTIONS BELOW FOR ADDITIONAL REQUIREMENTS.

SHOP DRAWINGS
SUBMIT SHOP DRAWINGS OF STRUCTURAL ITEMS WHERE REQUIRED FOR REVIEW PRIOR TO FABRICATION OR SHIPMENT TO SITE AS APPLICABLE. SUBMITTALS SHALL INCLUDE REPRODUCIBLE COPY AND BLUELINE PRINT OF ANY DRAWINGS.

DESIGN LOADS
ROOF (SNOW) LIVE LOAD ..... 25 PSF (BASIC)
GROUND SNOW (DRIFT PER UBC CHAPTER 16 APPENDIX)..... 34 PSF (SEAW SNOWLOAD HDBK)
STORAGE FLOOR LIVE LOAD ..... 125 PSF
CRANE LOAD ..... 5 TON
WIND ZONE ..... 70 MPH, EXP. C, I=1.0
SEISMIC ZONE ..... 2B, I=1.0, R=4.5

SOIL AND FOUNDATIONS
FOOTING BEARING PRESSURES ARE LIMITED TO 2500 PSF BASED ON GEOTECHNICAL INVESTIGATION "GEOTECHNICAL ENGINEERING EVALUATION, DISTRICT 3– QUINCY AREA SHOP," DATED APRIL 28, 2004, PREPARED BY GRANT COUNTY PUBLIC WORKS. FOOTINGS SHALL BEAR ON NATIVE SOIL OR ON COMPACTED STRUCTURAL FILL IN ACCORDANCE WITH GEOTECHNICAL REPORT RECOMMENDATIONS. FOOTINGS AT EXTERIOR OR IN UNHEATED AREAS SHALL BEAR A MINIMUM OF 1'–6" BELOW FINISH GRADE. PROVIDE COMPACTED STRUCTURAL BACKFILL AT SLABS–ON–GRADE.

CAST–IN–PLACE CONCRETE
ATTAIN A MINIMUM COMPRESSIVE STRENGTH OF 3000 PSI AT 28 DAYS. MINIMUM CEMENT CONTENT SHALL BE 5 SACKS PER CUBIC YARD FOR FOOTINGS AND FOUNDATION WALLS, 5.5 SACKS FOR SLABS ON GRADE. CONCRETE SHALL BE PLACED AND CURED IN ACCORDANCE WITH UBC AND UBC STANDARDS. UNAUTHORIZED ADDITIONS TO THE MIX SHALL NOT BE MADE AT THE JOB SITE.

MASONRY
MINIMUM COMPRESSIVE STRENGTH OF MASONRY f'm = 1500 PSI AT 28 DAYS.
CONCRETE MASONRY UNITS: ASTM C90, GRADE N–1, RUNNING BOND.
MORTAR: ASTM C270 TYPE S, MINIMUM COMPRESSIVE STRENGTH 1800 PSI AT 28 DAYS.
GROUT: ASTM C476, MINIMUM COMPRESSIVE STRENGTH 2000 PSI AT 28 DAYS TYPICAL.
PLACE ALL REINFORCEMENT PRIOR TO GROUTING WITH VERTICAL BARS TIED SECURELY AT 8'–0" MAXIMUM ON CENTER ALONG BAR. HORIZONTAL REINFORCEMENT SHALL BE MINIMUM 8" HIGH BOND BEAMS. FILL ALL CELLS CONTAINING REINFORCING WITH GROUT IN LIFTS NOT EXCEEDING 4'–0" IN HEIGHT. FILL OTHER CELLS WITH GROUT AS INDICATED ON THE DRAWINGS. FILL ALL CELLS CONTAINING ANCHOR BOLTS, WELD STUDS, ADHESIVE ANCHORS AND CONNECTORS WITH GROUT. CONSOLIDATE GROUT BY MECHANICAL VIBRATION.
VENEER ANCHORAGE: PER UBC CHAPTER 14, VENEER TIES SHALL BE SPACED TO SUPPORT NO MORE THAN 2 SQUARE FEET OF VENEER; SPACING SHALL NOT EXCEED 16" HORIZONTALLY NOR 16" VERTICALLY.)
AT MASONRY WALLS: DUR–O–WAL "DUR–O–EYE" (DA 370) @ 16" MAX. O.C., SIZE AS APPROPRIATE FOR STRUCTURAL WYTHE AND CAVITY SHOWN OR APPROVED EQUIVALENT.
AT STUD WALLS: DUR–O–WAL D/A 213 ANCHORS OR APPROVED EQUIVALENT, HOT DIP GALVANIZED W/ CORROSION RESISTANT SCREWS.
DESIGN IS FOR INSPECTED VALUES PER UBC. SPECIAL INSPECTION IS REQUIRED DURING PREPARATION AND TAKING OF TEST SPECIMENS, AT THE START OF LAYING UNITS, AFTER THE PLACEMENT OF REINFORCING STEEL, OF THE GROUT SPACE PRIOR TO EACH GROUTING OPERATION, AND DURING ALL GROUTING OPERATIONS. TESTING OF GROUT COMPRESSIVE STRENGTH IS REQUIRED PER UBC.

REINFORCING STEEL
DEFORMED BARS: ASTM A615 GRADE 60.
WELDED WIRE FABRIC: ASTM A82 AND A185; PROVIDE FLAT SHEETS ONLY.
BARS SHALL BE SECURELY TIED IN PLACE AND PROVIDED WITH CONCRETE COVER AS SHOWN ON THE DRAWINGS OR AS FOLLOWS IF NOT OTHERWISE NOTED: FOOTINGS, 3" FROM THE SOIL; FORMED CONCRETE AGAINST SOIL, 2"; COLUMN TIES, 1.5".
SUBMIT SHOP DRAWINGS INDICATING BAR SIZE, SPACING, LAYOUT AND DETAILS, INCLUDING ELEVATIONS OF ALL CMU AND CONCRETE WALLS FOR REVIEW PRIOR TO FABRICATION.

STRUCTURAL STEEL
SHAPES (EXCEPT WIDE FLANGE) AND PLATES: ASTM A36, Fy = 36 KSI.
WIDE FLANGE SHAPES: ASTM A992/A572–50, Fy = 50 KSI MIN. (65 KSI MAX.).
STRUCTURAL TUBING: ASTM A500, GRADE B, Fy = 46 KSI.
STRUCTURAL PIPE: ASTM A501, Fy = 36 KSI, OR ASTM A53, TYPE E OR S, GRADE B, Fy = 35 KSI.
MEMBERS SHALL BE UNSPLICED AND FABRICATED PER AISC WITH "STANDARD" HOLES (1/16" LARGER THAN BOLT DIAMETER) UNLESS SPECIFICALLY DETAILED OR APPROVED OTHERWISE. HOLES FOR ANCHOR BOLTS MAY BE 3/16" MAXIMUM LARGER THAN BOLT UNLESS NOTED OTHERWISE (PROVIDE WASHERS AT ALL ANCHOR BOLTS). HOLES IN LEDGERS FOR ANCHOR BOLTS MAY BE 3/16" MAXIMUM LARGER THAN BOLT UNLESS NOTED OTHERWISE.
BOLTS: ASTM A325–N, 3/4–INCH DIAMETER, FOR STEEL–TO–STEEL CONNECTIONS UNLESS OTHERWISE NOTED; ASTM A307 OR EQUIVALENT FOR ANCHOR BOLTS IN CONCRETE OR MASONRY. MINIMUM ANCHOR BOLT EMBEDMENTS TO BE 8" IN CONCRETE AND 5" IN GROUTED CONCRETE MASONRY UNLESS OTHERWISE NOTED.
WELDING BY WABO CERTIFIED WELDERS OR WELDERS CERTIFIED IN ACCORDANCE WITH AWS STANDARDS USING E70XX ELECTRODES.
EXPANSION ANCHORS: "HILTI KWIK BOLT II" OR APPROVED EQUIVALENT, INSTALL ONLY AFTER RECEIVING MATERIAL HAS ATTAINED SPECIFIED 28–DAY STRENGTH. MINIMUM ANCHOR EMBEDMENTS TO BE 8" IN CONCRETE UNLESS OTHERWISE NOTED.
WELD STUDS: HEADED (H.A.S.) "NELSON S3L AND H4L", THREADED (T.A.S.) "NELSON CPL", DEFORMED BAR ANCHORS (D.A.S.) "NELSON D2L"; OR APPROVED ANCHORS OF EQUIVALENT CAPACITY, WELDED PER MANUFACTURER'S RECOMMENDATIONS.
ADHESIVE ANCHORS: THREADED ROD AND HILTI "HIT HY–150" ADHESIVE OR APPROVED EQUIVALENT IN CONCRETE OR SOLID GROUTED CONCRETE MASONRY WITH MINIMUM EMBEDMENT OF 5" FOR 5/8" DIAMETER ANCHORS AND 6 3/4" FOR 3/4" DIAMETER ANCHORS.
USE NON–SHRINK GROUT/DRYPACK BELOW STEEL BASE PLATES AND BEARING PLATES.
MEMBERS AND CONNECTORS (BOLTS OR ANCHORS) DIRECTLY SUPPORTING EXTERIOR MASONRY SHALL BE HOT–DIP GALVANIZED WITH MINIMUM ZINC COATING OF 1.5 OUNCES/SQUARE FOOT OF SURFACE AREA.
SUBMIT SHOP DRAWINGS OF ALL STRUCTURAL STEEL MEMBERS FOR REVIEW.
SHOP WELDING SHALL BE DONE IN A CERTIFIED FABRICATOR'S SHOP APPROVED BY THE BUILDING OFFICIAL (UBC 1701.7) OR SHALL BE PERFORMED UNDER SPECIAL INSPECTION WITH SUCH INSPECTION AT THE FABRICATOR'S EXPENSE. SUBMIT EVIDENCE OF CERTIFICATION PRIOR TO COMMENCING FABRICATION.
FIELD WELDING QUALIFIES FOR PERIODIC SPECIAL INSPECTION PER UBC SECTION 1701.5.5.1, EXCEPTION 2.
A325 BOLTS SHALL BE INSTALLED "SNUG–TIGHT" PER RCSC "SPECIFICATION FOR STRUCTURAL JOINTS USING ASTM A325 OR A490 BOLTS" AND COMMENTARY WITH PERIODIC INSPECTION PER SECTION 1701.6.
PROVIDE SPECIAL INSPECTION FOR ADHESIVE ANCHOR INSTALLATION. INSPECTOR SHALL VERIFY INSTALLATION IN ACCORDANCE WITH MANUFACTURER'S INSTRUCTIONS.

STEEL DECK
ASTM A446, GRADE A OR BETTER, GALVANIZED PER ASTM A525 G–60. SEE FASTENING SCHEDULES FOR DECK ATTACHMENT AND MINIMUM SECTION PROPERTIES. INDIVIDUAL SHEET LENGTH SHALL BE CONTINUOUS OVER FOUR OR MORE SUPPORTS UNLESS NOTED OTHERWISE ON THE DRAWINGS.
EQUIPMENT, PIPES AND DUCTS SHALL NOT BE SUPPORTED FROM THE STEEL DECK. MECHANICAL SUBCONTRACTOR SHALL PROVIDE ALL SECONDARY FRAMING SUPPORTS BETWEEN BEAMS AND JOISTS.
SUBMIT SHOP DRAWINGS INDICATING DECK LAYOUT, ACCESSORIES AND PROPERTIES FOR REVIEW.
DECK WELDING QUALIFIES FOR PERIODIC SPECIAL INSPECTION PER UBC SECTION 1701.5.5.1, EXCEPTION 2.2.

STEEL JOISTS AND JOIST GIRDERS
CONFORM TO "STANDARD SPECIFICATIONS FOR OPEN WEB STEEL JOISTS, K–SERIES", "STANDARD SPECIFICATIONS FOR LONGSPAN STEEL JOISTS, LH–SERIES AND DEEP LONGSPAN STEEL JOISTS, DLH–SERIES", AND "STANDARD SPECIFICATIONS FOR JOIST GIRDERS" ADOPTED BY THE STEEL JOIST INSTITUTE, CURRENT EDITION. PROVIDE HORIZONTAL OR DIAGONAL BRIDGING AS SHOWN OR AS REQUIRED BY THE STEEL JOIST INSTITUTE AND THE JOIST MANUFACTURER IF NOT SHOWN OTHERWISE. PROVIDE SLOPED AND/OR SKEWED JOIST BEARINGS WHERE REQUIRED FOR ROOF SLOPE.
LIVE LOAD DEFLECTION NOT TO EXCEED SPAN/360; CAMBER PER SJI STANDARDS. ROOF JOISTS AND BRIDGING OVER SHOP AREA SHALL BE DESIGNED FOR 14PSF NET UPLIFT LOADING, TYPICAL.
SUBMIT SHOP DRAWINGS INDICATING JOIST LAYOUT, DETAILS AND DESIGN LOADINGS FOR REVIEW PRIOR TO FABRICATION.
CONTRACTOR SHALL VERIFY ACTUAL WEIGHTS AND LOCATIONS OF ANY EQUIPMENT TO BE SUPPORTED BY THE JOISTS PRIOR TO JOIST FABRICATION.
JOIST FABRICATOR SHALL HAVE CURRENT STEEL JOIST INSTITUTE MEMBERSHIP AND ICBO APPROVAL AS A RECOGNIZED FABRICATOR OF STRUCTURAL STEEL BUILDING COMPONENTS IN ACCORDANCE WITH UBC SECTIONS 1701.7 AND 1704 AND AN APPROVED QUALITY CONTROL INSPECTION PROGRAM. SUBMIT EVIDENCE OF CURRENT APPROVAL PRIOR TO COMMENCING FABRICATION.

WOOD
DOUGLAS FIR–LARCH PER WESTERN WOOD PRODUCTS ASSOCIATION GRADING RULES, MAXIMUM MOISTURE CONTENT 19%.
SAWN LUMBER INCLUDING 2X6 STUDS: NUMBER 2 OR BETTER.
4X4 POSTS AND 2X4 STUDS: STANDARD GRADE OR BETTER, Fc=1350 PSI.
6X6 POSTS: NO. 1 OR BETTER, Fc = 1000 PSI, Fb = 1200 PSI.
GLUED–LAMINATED BEAMS: FABRICATE IN ACCORDANCE WITH ANSI/AITC A190.1, AITC 117 AND ASTM D3737. PROVIDE AITC CERTIFICATION MARK ON BEAMS. PROVIDE 24F–V4 GRADE COMBINATION.
HARDWARE: SIMPSON "STRONG–TIE" OR APPROVED EQUIVALENT, FASTENED PER MANUFACTURER'S DIRECTIONS.
NAILING: NAILS SHOWN SHALL BE COMMON NAILS UNLESS NOTED OTHERWISE. NAIL ACCORDING TO UBC TABLE 23–II–B–1 AND APPLICABLE SECTIONS OF UBC CHAPTER 23 WHERE NOT OTHERWISE NOTED.
WOOD STUD WALLS SHALL HAVE FINISH MATERIALS APPLIED BOTH SIDES AND FASTENED TO EACH STUD UNLESS SPECIFICALLY NOTED OTHERWISE.

SHEATHING
CD INTERIOR APA PLYWOOD WITH EXTERIOR GLUE OR EQUIVALENT APA RATED SHEATHING.
WALL SHEATHING SHALL BE 5/8" NOMINAL THICKNESS, 32/16 MINIMUM INDEX, WITH ALL PANEL EDGES BLOCKED WITH 2X FLAT, HORIZONTAL BLOCKING BETWEEN EACH STUD. FASTEN WITH 10d NAILS AT 6" O.C. ALONG ALL PANEL EDGES AND 12" O.C. ALONG INTERMEDIATE FRAMING.
ROOF SHEATHING SHALL BE 5/8" NOMINAL THICKNESS, 32/16 MINIMUM INDEX, WITH UNBLOCKED PANEL EDGES UNLESS NOTED OTHERWISE. FASTEN WITH 10d NAILS AT 6" O.C. ALONG SUPPORTED PANEL EDGES AND 12" O.C. ALONG INTERMEDIATE SUPPORTS UNLESS NOTED OTHERWISE.

PROPRIETARY WOOD PRODUCTS
TJI JOISTS, ACCESSORIES AND BLOCKING AS MANUFACTURED BY TRUS JOIST™ UNLESS NOTED OTHERWISE. JOISTS SHALL HAVE LVL FLANGES. JOISTS SHALL HAVE LOAD CAPACITIES IN ACCORDANCE WITH MANUFACTURER'S PUBLISHED LOAD TABLES.
DESIGN ROOF JOISTS AND BRIDGING OVER VEHICLE STORAGE AREA FOR 8.2 PSF NET UPLIFT AND OVER THE WASH BAY AND STORAGE AREAS FOR 12.7 PSF NET UPLIFT.
INSTALL PER MANUFACTURER'S RECOMMENDATIONS. FLOOR SHEATHING SHALL BE GLUED AND NAILED. FASTEN TJI JOISTS TO WOOD SUPPORTS WITH 2– 8d COMMON OR 2–10d BOX NAILS THROUGH BOTTOM FLANGE 1.5" MINIMUM FROM JOIST END. NAIL TJI BLOCKING PANELS OR RIM JOISTS TO SUPPORTS BELOW WITH 8d COMMON OR 10d BOX NAILS AT 6" O.C. FULL LENGTH.
PROVIDE SHOP DRAWINGS INDICATING JOIST LAYOUT, DETAILS AND DESIGN LOADINGS FOR REVIEW.

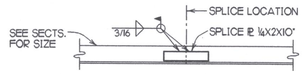

04825_S001-13 **13** TYPICAL ROOF LEDGER ANGLE SPLICE

STEEL ROOF DECK FASTENING SCHEDULE		
1½" 22 GA. GALV. TYPE 'B' STEEL ROOF DECK		
I MIN. = 0.175 IN^4/FT.	S MIN. = 0.187 IN^3/FT.	
LOCATION	CONNECTION	REMARKS
END BRG. & INTERM. SUPPORTS	½" ø PUDDLE WELD 7 WELDS PER 36" SHEET (36")	MIN. END LAP = 2"
SIDE LAPS	BUTTON PUNCH @ 24"OC	
SHT. EDGES @ MARGINAL SUPPORTS	½" ø PUDDLE WELDS @ 18" O.C.	

04825_S001-14 **14**

No.	DATE	BY
4		
3		
2		
1		

STRUCTURAL DESIGN NORTHWEST INC.
926 W. Sprague Ave., Suite 581
Spokane, WA 99201
(509) 456-5253

ZECK BUTLER ARCHITECTS PS
The Pavilion Center 421 W Riverside Suite 220 Spokane WA 99201 t 509 . 456 . 8236 f 509 . 747 . 0570
e www.zeckbutler.com

SHEET TITLE: GENERAL STRUCTURAL NOTES AND TYPICAL DETAILS

PROJECT TITLE: GRANT COUNTY PUBLIC WORKS DEPARTMENT
ROAD DISTRICT NO. 9 SHOP FACILITY
QUINCY, WASHINGTON

SEAL: GARRICK A. DUNN, STATE OF WASHINGTON, 15450, REGISTERED PROFESSIONAL ENGINEER
7/12/04
EXPIRES 11/08/04

DATE	7/12/04
DRAWN	SSK
CHECKED	GAD
PROJECT NUMBER	0415
DRAWING NO.	SO.1

MARK	SIZE
C1	W12X65
C2	W12X53
C3	TS7X7X9/16
C4	TS5X5X1/4
C5	TS4X4X1/4

04025.S201-01 — 1 — SHOP BUILDING COLUMN SCHEDULE — 3/4" = 1'-0"

MK.	SIZE	REINFORCING
F1	2'-0" CONT. X 12" DP.	2- #5 CONT.
F2	2'-4" CONT. X 12" DP.	2- #5 CONT.
F3	2'-8" CONT. X 12" DP.	2- #5 CONT.
F4	2'-0" SQ. X 12" DP.	3- #4 EA. WAY, BOT
F5	3'-0" SQ. X 12" DP.	4- #4 EA. WAY, BOT
F6	3'-6" SQ. X 12" DP.	4- #4 EA. WAY, BOT
F7	4'-0" SQ. X 12" DP.	5- #5 EA. WAY, BOT
F8	4'-6" SQ. X 12" DP.	5- #5 EA. WAY, BOT
F9	5'-6" SQ. X 15" DP.	6- #5 EA. WAY, BOT
F10	6'-6" SQ. X 18" DP.	7- #6 EA. WAY, BOT
F11	4'-0" X 9'-6" X 12" DP.	6- #6 LONGITUDINAL, BOT. 10- #5 TRANSVERSE, BOT.
F12	5'-0" X 8'-0" X 12" DP.	6- #6 LONGITUDINAL, BOT. 10- #5 TRANSVERSE, BOT.

NOTE: CENTER CONTINUOUS FOOTINGS ON WALLS AND CENTER SQUARE FOOTINGS ON COLUMNS UNLESS DETAILED OTHERWISE.

BOTTOM REINF. SHALL BE 3" CLR. FROM BOTTOM OF FOOTING, TOP REINF. 2" CLR. FROM TOP OF FOOTING.

04025.S201-02 — 2 — SHOP BUILDING FOOTING SCHEDULE — 3/4" = 1'-0"

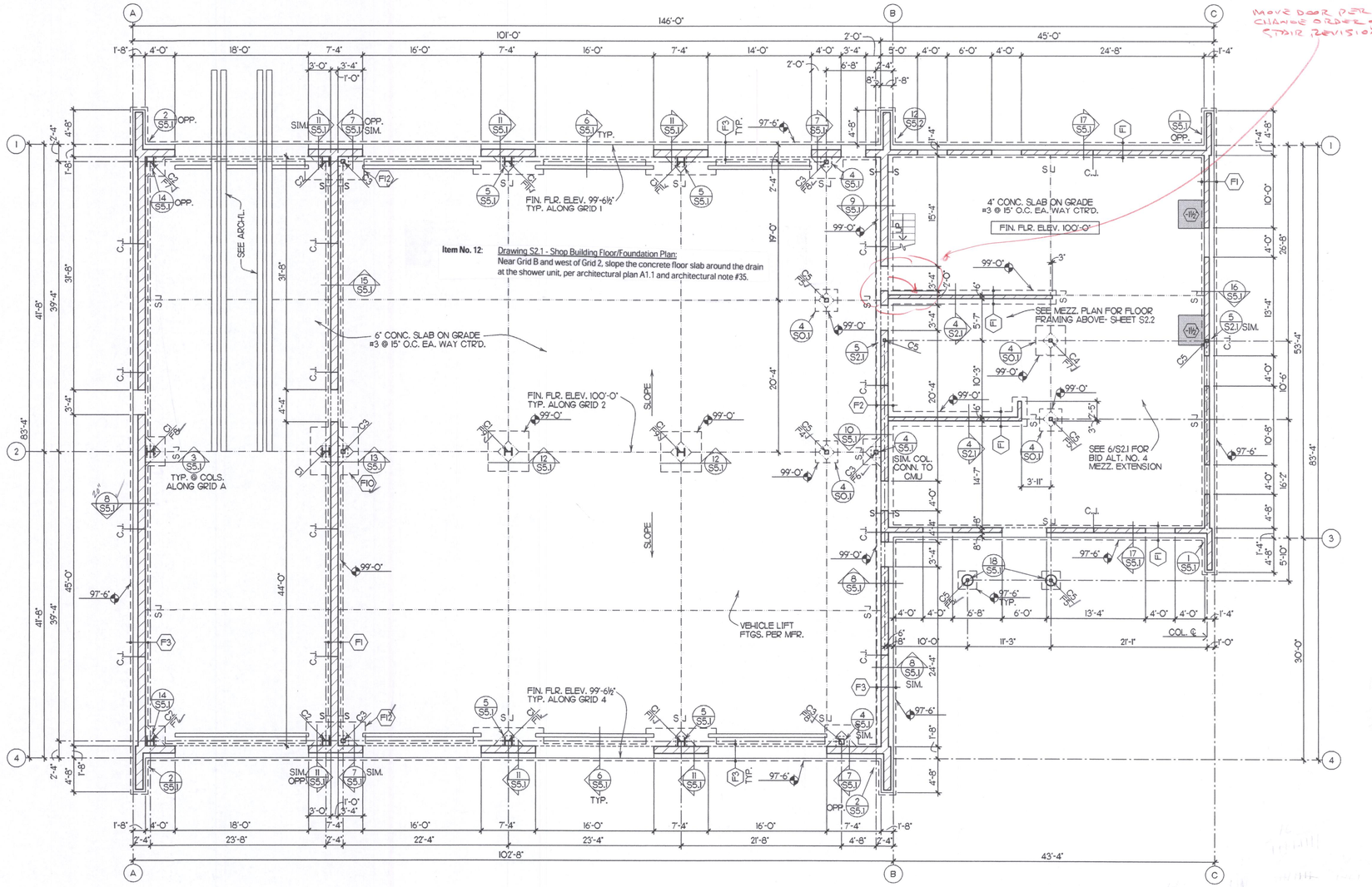

Item No. 12: Drawing S2.1 - Shop Building Floor/Foundation Plan: Near Grid B and west of Grid 2, slope the concrete floor slab around the drain at the shower unit, per architectural plan A1.1 and architectural note #35.

MOVE DOOR PER CHANGE ORDER & STAIR REVISIONS

NORTH PLAN

SHOP BUILDING FLOOR/FOUNDATION PLAN

SCALE: 1/8"=1'-0"

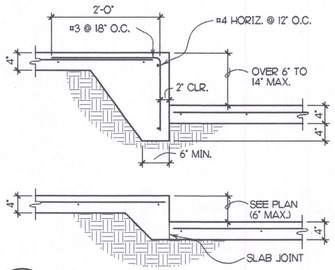

04025.S201-03 — 3 — TYPICAL RECESSED SLAB — 3/4" = 1'-0"

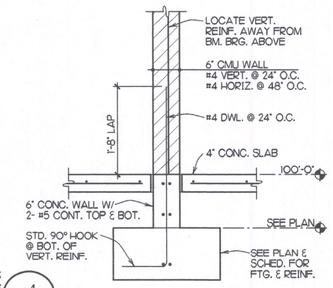

04025.S201-04 — 4 — 3/4" = 1'-0"

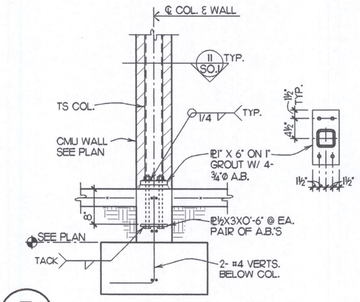

04025.S201-05 — 5 — 3/4" = 1'-0"

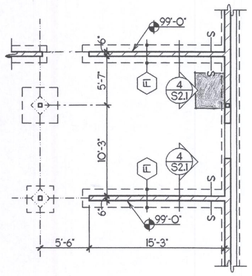

FLOOR/FOUNDATION PLAN

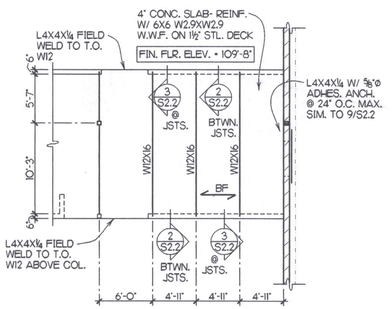

MEZZANINE PLAN

04025.S201-06 — 6 — BID ALTERNATE NO. 4 — 1/8" = 1'-0"

FLOOR/FOUNDATION PLAN NOTES

REF. FIN. FLR. ELEV. 100'-0" = SITE ELEV. 985.60'

- C.J. — INDICATES WALL MASONRY CONTROL JOINT- SEE 10/SO.1
- X/S2.1 — DETAIL REFERENCE: INDICATES SHEET NUMBER.
- S— —S — INDICATES FOOTING STEP- SEE 2/SO.1
- S — INDICATES SLAB JOINT- SEE 3/SO.1
- XX — INDICATES TOP OF FOOTING ELEVATION
- C — INDICATES COLUMN & FOOTING MARKS- SEE 1 & 2/S2.1
- F1 — INDICATES FOOTING MARK- SEE 2/S2.1
- 11½ — INDICATES RECESSED SLAB SEE 3/S2.1 (SEE ARCH'L. FOR LIMITS)

PROVIDE CORNER BARS AT ALL CONCRETE AND CMU WALL INTERSECTIONS PER 1/SO.1

FOR TYPICAL CMU WALL REINFORCEMENT DETAILS AND LINTEL SCHEDULE SEE 8/SO.1

No.	DATE	BY
4		
3		
2		
1		

STRUCTURAL DESIGN NORTHWEST INC.
926 W. Sprague Ave., Suite 581
Spokane, WA 99201
(509) 456-5253

ZECK BUTLER ARCHITECTS PS
The Pavilion Center 421 W Riverside Suite 220 Spokane WA 99201 t 509 . 456 . 8236 f 509 . 747 . 0570
e www.zeckbutler.com

SHEET TITLE: SHOP BUILDING FLOOR/FOUNDATION PLAN MEZZANINE FLOOR FRAMING PLAN AND DETAILS

PROJECT TITLE: GRANT COUNTY PUBLIC WORKS DEPARTMENT
ROAD DISTRICT NO. 5 SHOP FACILITY
QUINCY, WASHINGTON

SEAL: GARRICK A. DUNN — STATE OF WASHINGTON — 15450 — REGISTERED PROFESSIONAL ENGINEER — 7/8/04
EXPIRES 11/08/04

DATE	7/12/04
DRAWN	SSK
CHECKED	GAD
PROJECT NUMBER	0415
DRAWING NO.	S2.1

MARK	SIZE
C1	W12X65
C2	W12X53
C3	TS7X7X5/16
C4	TS5X5X1/4
C5	TS4X4X1/4

04025 S201-01 — 1 — SHOP BUILDING COLUMN SCHEDULE — 3/4" = 1'-0"

MK.	SIZE	REINFORCING
F1	2'-0" CONT. X 12" DP.	2- #5 CONT.
F2	2'-4" CONT. X 12" DP.	2- #5 CONT.
F3	2'-8" CONT. X 12" DP.	2- #5 CONT.
F4	2'-0" SQ. X 12" DP.	3- #4 EA. WAY, BOT
F5	3'-0" SQ. X 12" DP.	4- #4 EA. WAY, BOT
F6	3'-6" SQ. X 12" DP.	4- #4 EA. WAY, BOT
F7	4'-0" SQ. X 12" DP.	5- #5 EA. WAY, BOT
F8	4'-6" SQ. X 12" DP.	5- #5 EA. WAY, BOT
F9	5'-6" SQ. X 15" DP.	6- #5 EA. WAY, BOT
F10	6'-6" SQ. X 18" DP.	7- #6 EA. WAY, BOT
F11	4'-0" X 9'-6" X 12" DP.	6- #6 LONGITUDINAL, BOT. 10- #5 TRANSVERSE, BOT.
F12	5'-0" X 8'-0" X 12" DP.	6- #6 LONGITUDINAL, BOT. 10- #5 TRANSVERSE, BOT.

NOTE: CENTER CONTINUOUS FOOTINGS ON WALLS AND CENTER SQUARE FOOTINGS ON COLUMNS UNLESS DETAILED OTHERWISE.

BOTTOM REINF. SHALL BE 3" CLR. FROM BOTTOM OF FOOTING, TOP REINF. 2" CLR. FROM TOP OF FOOTING.

04025 S201-02 — 2 — SHOP BUILDING FOOTING SCHEDULE — 3/4" = 1'-0"

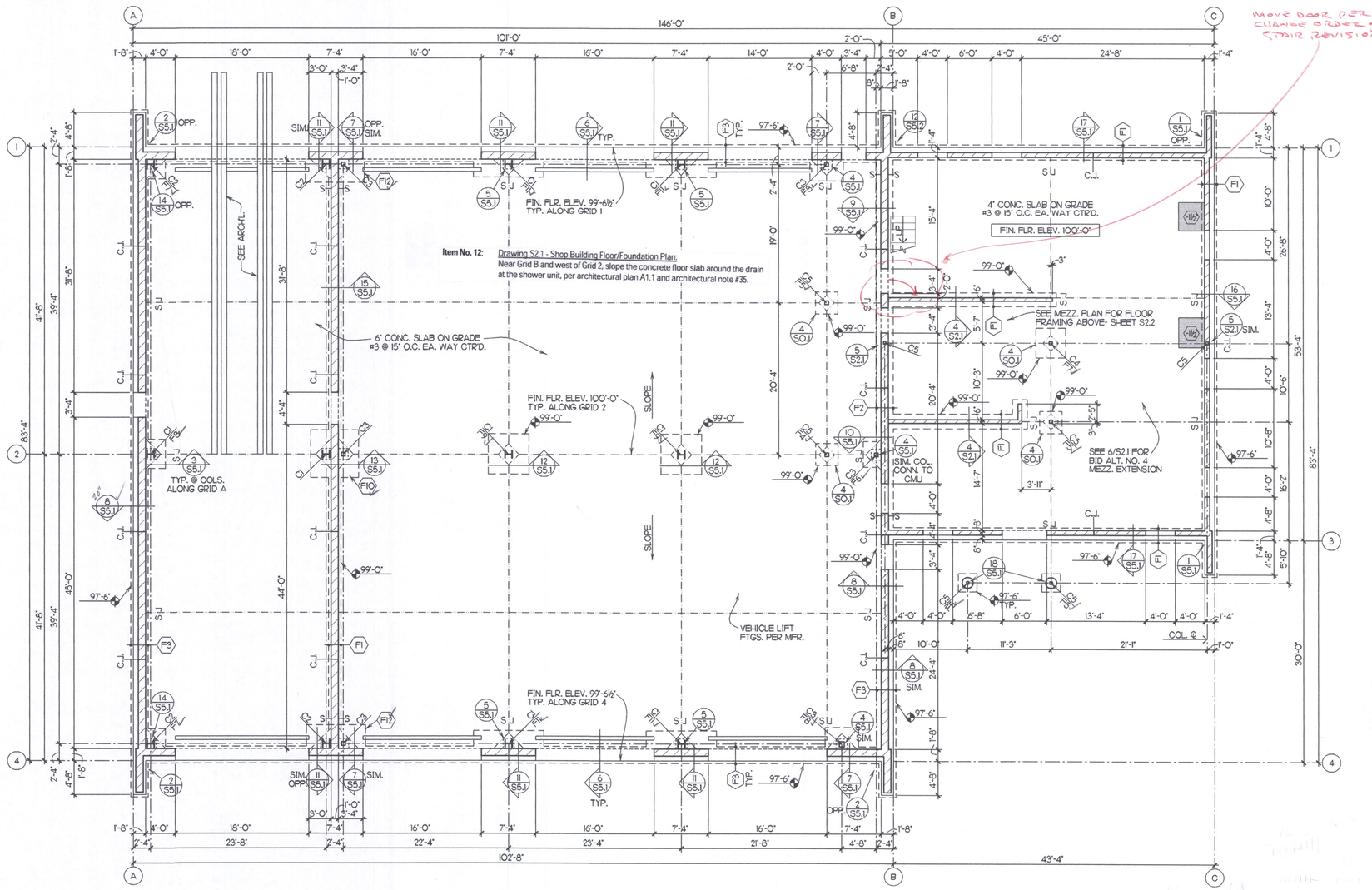

NORTH — PLAN

SHOP BUILDING FLOOR/FOUNDATION PLAN

SCALE: 1/8"=1'-0"

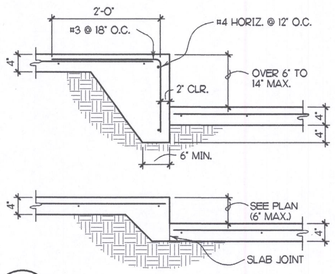

04025 S201-03 — 3 — TYPICAL RECESSED SLAB — 3/4" = 1'-0"

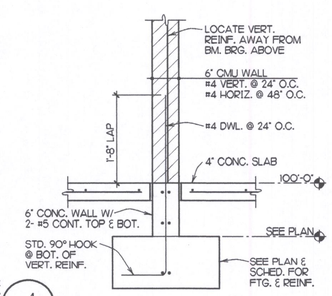

04025 S201-04 — 4 — 3/4" = 1'-0"

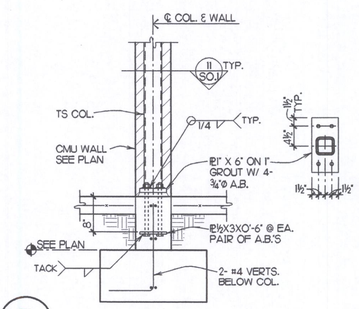

04025 S201-05 — 5 — 3/4" = 1'-0"

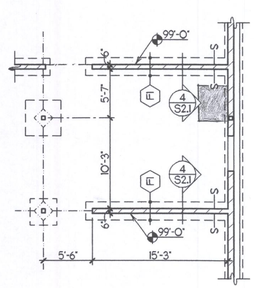

FLOOR/FOUNDATION PLAN

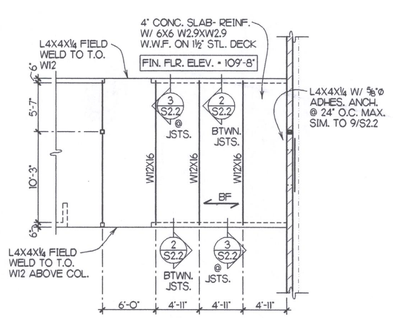

MEZZANINE PLAN

04025 S201-06 — 6 — BID ALTERNATE NO. 4 — 1/8" = 1'-0"

FLOOR/FOUNDATION PLAN NOTES

REF. FIN. FLR. ELEV. 100'-0" = SITE ELEV. 985.60'

- C.J. — INDICATES WALL MASONRY CONTROL JOINT- SEE 10/SO.1
- X/S2.1 — DETAIL REFERENCE: INDICATES SHEET NUMBER.
- S— —S — INDICATES FOOTING STEP- SEE 2/SO.1
- S — INDICATES SLAB JOINT- SEE 3/SO.1
- XX — INDICATES TOP OF FOOTING ELEVATION
- X/X — INDICATES COLUMN & FOOTING MARKS- SEE 1 & 2/S2.1
- F1 — INDICATES FOOTING MARK- SEE 2/S2.1
- 1½ — INDICATES RECESSED SLAB SEE 3/S2.1 (SEE ARCH'L. FOR LIMITS)

PROVIDE CORNER BARS AT ALL CONCRETE AND CMU WALL INTERSECTIONS PER 1/SO.1

FOR TYPICAL CMU WALL REINFORCEMENT DETAILS AND LINTEL SCHEDULE SEE 8/SO.1

No.	DATE	BY
4		
3		
2		
1		

STRUCTURAL DESIGN NORTHWEST INC.
926 W. Sprague Ave., Suite 581
Spokane, WA 99201
(509) 456-5253

ZECK BUTLER ARCHITECTS PS
The Pendleton Center 421 W Riverside Suite 220 Spokane WA 99201 t 509 456 8235 f 509 747 0570
e www.zeckbutler.com

SHEET TITLE: SHOP BUILDING FLOOR/FOUNDATION PLAN MEZZANINE FLOOR FRAMING PLAN AND DETAILS

PROJECT TITLE: GRANT COUNTY PUBLIC WORKS DEPARTMENT — ROAD DISTRICT NO. 5 SHOP FACILITY — QUINCY, WASHINGTON

SEAL: GARRICK A. DUNN — STATE OF WASHINGTON — 15450 — REGISTERED PROFESSIONAL ENGINEER — 7/8/04 — EXPIRES 11/08/04

DATE	7/12/04
DRAWN	SSK
CHECKED	GAD
PROJECT NUMBER	0415
DRAWING NO.	S2.1

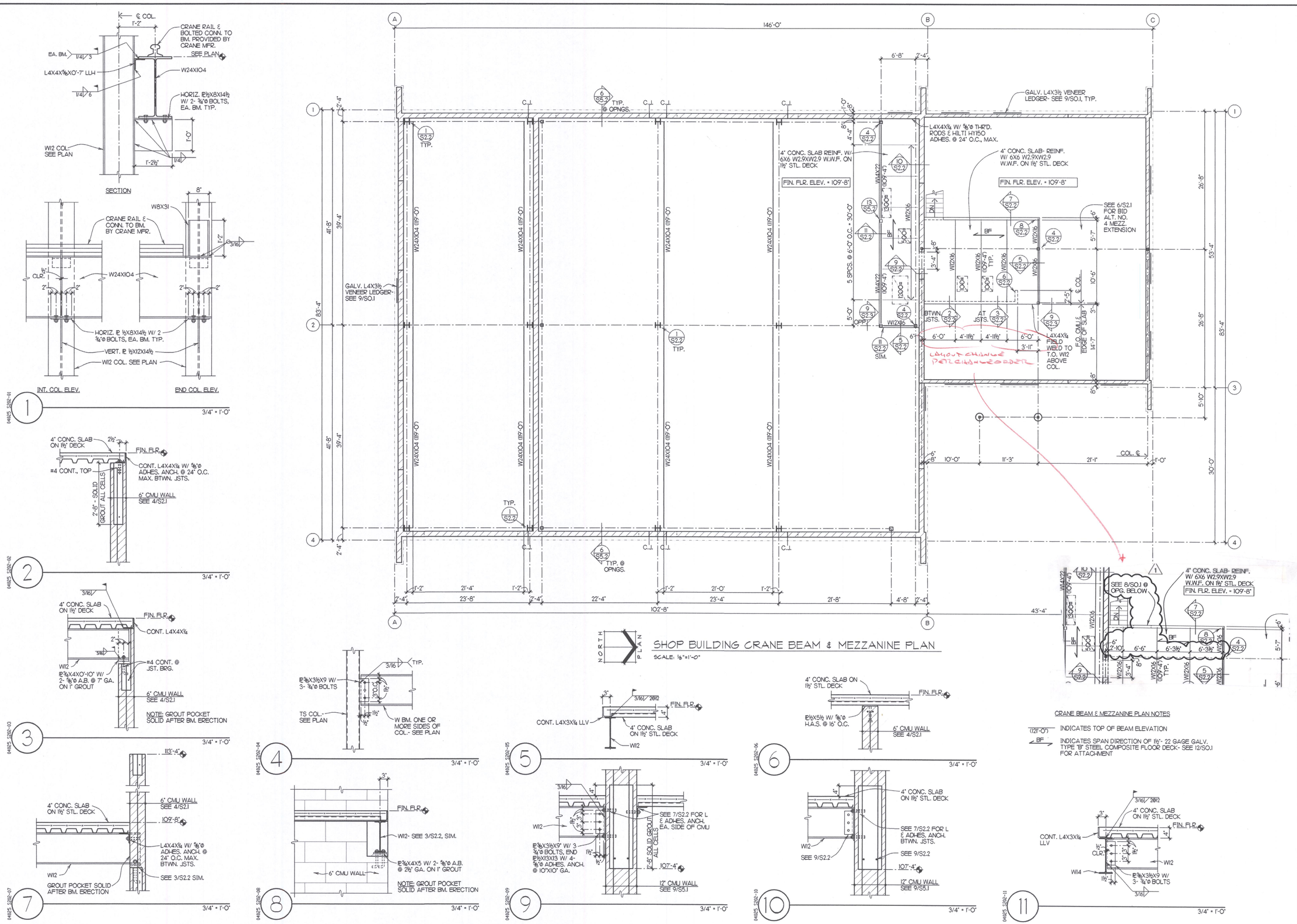

No.	DATE	BY
4		
3		
2		
1		

STRUCTURAL DESIGN NORTHWEST INC.
928 W. Sprague Ave., Suite 581
Spokane, WA 99201
(509) 456-5253

ZECK BUTLER ARCHITECTS PS
The Paulsen Center 421 W Riverside Suite 220 Spokane WA 99201 t 509 . 456 . 8236 f 509 . 747 . 0370
e www.zeckbutler.com

SHEET TITLE: SHOP BUILDING CRANE PLAN AND DETAILS

PROJECT TITLE: GRANT COUNTY PUBLIC WORKS DEPARTMENT
ROAD DISTRICT NO. 3 SHOP FACILITY
QUINCY, WASHINGTON

SEAL: GARRICK A. HUNTER, STATE OF WASHINGTON, 15450, REGISTERED PROFESSIONAL ENGINEER
EXPIRES 11/08/04

DATE	7/12/04
DRAWN	SSK
CHECKED	GAD
PROJECT NUMBER	0415
DRAWING NO.	S2.2

Item No. 13: Drawing S2.3 - Shop Building Roof Framing Plan:
At the 4'-6" joist space between the CMU wall along Grid B and the first roof joist to the north, the Contractor shall provide the horizontal or diagonal bridging as required by the Steel Joist Institute and the Joist Manufacturer for steel erection stability. After the roof structure (beams, joists, bridging, deck) has been completely constructed, the Contractor shall remove any joist bridging in the 4'-6" joist spacing that is in conflict with headroom of the stairs. The Contractor shall provide any additional horizontal or diagonal bridging, as required by the Steel Joist Institute and the Joist Manufacturer, in the north adjacent joist spaces to replace any bridging that is removed.

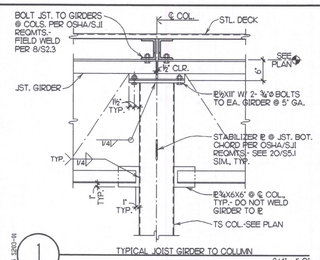

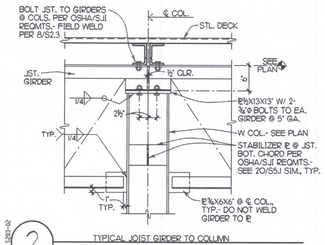

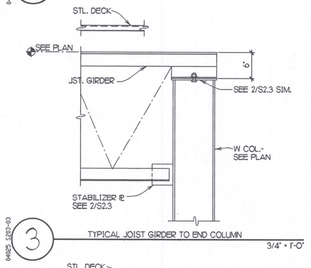

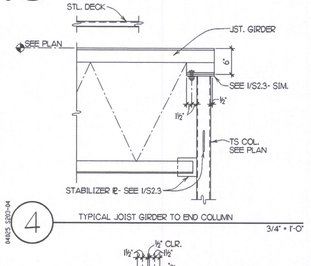

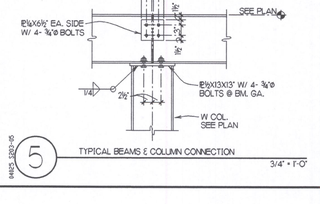

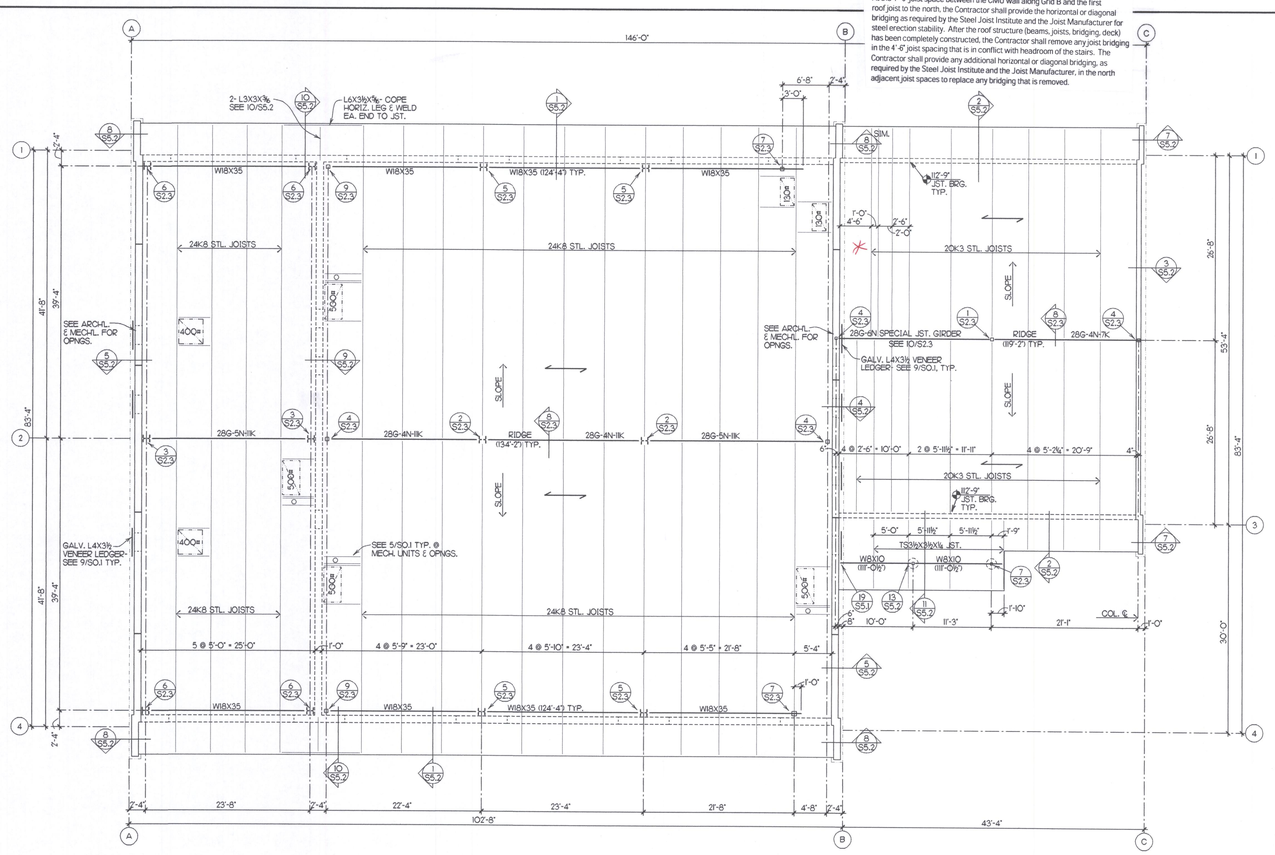

ROOF FRAMING PLAN NOTES

(121'-0") INDICATES TOP OF BEAM OR GIRDER ELEVATION

INDICATES SPAN DIRECTION OF 1½"- 22 GAGE GALV. TYPE "B" ROOF DECK:- SEE 14/S2.1

PROVIDE BRIDGING AT STEEL JOISTS PER S.JI AND FABRICATOR'S REQUIREMENTS TYP.- ANCHOR AT ENDS OF RUN PER FABRICATOR'S STANDARD DETAILS & 7/S2.1

REINFORCE JOISTS AT CONCENTRATED LOADS PER 6/S2.1

FRAME AT ROOF OPENINGS AND MECHANICAL UNIT SUPPORTS- NOT ALL ROOF & WALL OPENINGS ARE SHOWN- SEE MECH-L. AND ARCH-L. REINFORCE PER 5/S2.1

NORTH

SHOP BUILDING ROOF FRAMING PLAN

SCALE: 1/8" = 1'-0"

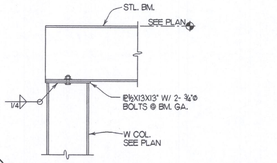

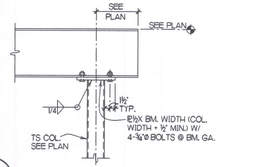

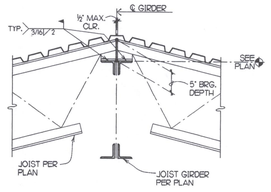

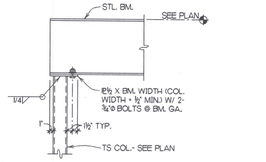

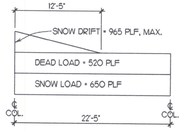

No.	DATE	BY
4		
3		
2		
1		

STRUCTURAL DESIGN NORTHWEST INC.
808 W. Spokane Ave., Suite 561
Spokane, WA 99201
(509) 456-5253

ZECK BUTLER ARCHITECTS PS

The Pavilion Center 421 W Riverside Suite 220 Spokane WA 99201 | 509 . 456 . 8238 | 509 . 747 . 0520
e: www.zeckbutler.com

SHEET TITLE: SHOP BUILDING ROOF FRAMING PLAN AND DETAILS

PROJECT TITLE: GRANT COUNTY PUBLIC WORKS DEPARTMENT
ROAD DISTRICT NO. 8 SHOP FACILITY
QUINCY, WASHINGTON

SEAL: DERRICK A. DUNN, STATE OF WASHINGTON, 15450, REGISTERED PROFESSIONAL ENGINEER, 7/16/04
EXPIRES 11/08/04

DATE	7/12/04
DRAWN	SSK
CHECKED	GAD
PROJECT NUMBER	0415
DRAWING NO.	S2.3

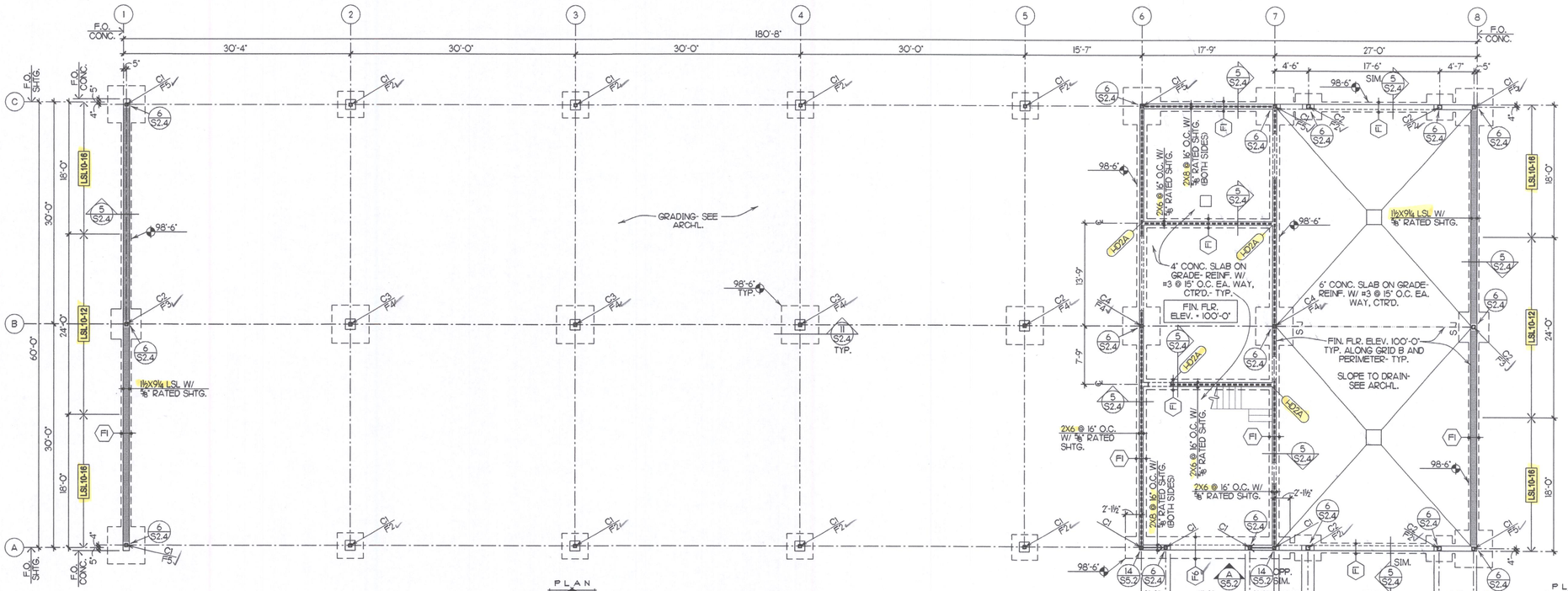

PLAN NORTH

VEHICLE STORAGE BUILDING FLOOR/FOUNDATION PLAN

SCALE: ⅛"=1'-0"

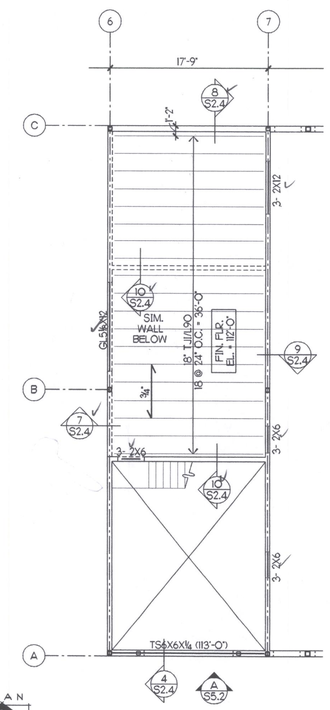

PLAN NORTH

MEZZANINE FRAMING PLAN

SCALE: ⅛"=1'-0"

FLOOR/FOUNDATION & MEZZANINE FRAMING PLAN NOTES

REF. FINISH FLOOR ELEVATION 100'-0" = SITE ELEVATION 985.90'

- S-1 — INDICATES SLAB JOINT- SEE 3/SO.1
- XX — INDICATES TOP OF FOOTING ELEVATION. REFERENCE FIN. FLR. ELEV. = 100'-0".
- C1 — INDICATES COLUMN MARK- SEE SCHEDULE 1/S2.4
- F1 — INDICATES PAD FOOTING MARK- SEE SCHEDULE 2/S2.4
- F1 — INDICATES FOOTING MARK- SEE 2/S2.4
- HD2A — INDICATES SIMPSON HOLDOWN- SEE 10/S2.5
- 5/S2.1 — DETAIL REFERENCE: INDICATES SHEET NUMBER.
- INDICATES DIAGONAL BRACE. SEE FRAME ELEVATIONS ON SHT. S5.2.
- INDICATES SHEAR WALL- SEE 11/S2.5
- LSL10-12 — INDICATES 1½X9¼ LSL @ 12" O.C.
- LSL10-16 — INDICATES 1½X9¼ LSL @ 16" O.C.
- ¾" — INDICATES ¾" 48/24 MIN. T & G APA RATED FLOOR SHEATHING. NAIL W/ 10d COMMON NAILS @ 6" O.C. ALL SUPPORTED PANEL EDGES & FLOOR PERIMETER, @ 12" O.C. AT INTERMEDIATE SUPPORTS. SEE DETAILS FOR ADDITIONAL NAILING REQUIREMENTS.

PROVIDE CORNER BARS AT ALL CONCRETE INTERSECTIONS PER 1/SO.1

SEE 9/S2.5 FOR TYPICAL OPENING FRAMING IN STUD WALLS.

MARK	SIZE
C1	TS5X5X⅜
C2	TS6X6X⅜
C3	TS6X6X¼
C4	TS5X5X⅜

04825 S204-01 — 1 — VEHICLE STORAGE BUILDING COLUMN SCHEDULE — 3/4" = 1'-0"

MARK	SIZE	REINF.
F1	1'-6" CONT. X 12" DP.	2- #5 CONT.
F2	3'-6" SQ. X 12" DP.	4- #4 E.W., TOP & BOT.
F3	4'-0" SQ. X 12" DP.	5- #5 E.W., TOP & BOT.
F4	5'-0" SQ. X 15" DP.	5- #5 E.W., TOP & BOT.
F5	5'-0" SQ. X 24" DP.	5- #5 E.W., TOP & BOT.
F6	3'-0" X 22'-0" X 18" DP.	5- #6 LONGIT., TOP & BOT. 18- #4 TRANSV., TOP & BOT.

NOTE: CENTER CONTINUOUS FOOTINGS ON WALLS AND CENTER SQUARE FOOTINGS ON COLUMNS UNLESS DETAILED OTHERWISE.

BOTTOM REINF. SHALL BE 3" CLR. FROM BOTTOM OF FOOTING, TOP REINF. 2" CLR. FROM TOP OF FOOTING.

04825 S204-02 — 2 — VEHICLE STORAGE BUILDING FOOTING SCHEDULE — 3/4" = 1'-0"

STUD WALL	CONC. THICK.	VERT. REINF.	HORIZ. REINF.
2X6	8"	#4 @ 16" O.C., CTR.	#5 @ 15" O.C., CTR.
2X8	8"	#4 @ 16" O.C., CTR.	#5 @ 15" O.C., CTR.
LSL 10	10"	#4 @ 16" O.C., CTR.	#5 @ 15" O.C., CTR.

04825 S204-03 — 3 — VEHICLE STORAGE BUILDING CONCRETE WALL SCHEDULE — 3/4" = 1'-0"

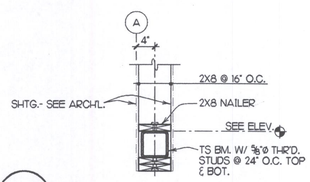

04825 S204-04 — 4 — 3/4" = 1'-0"

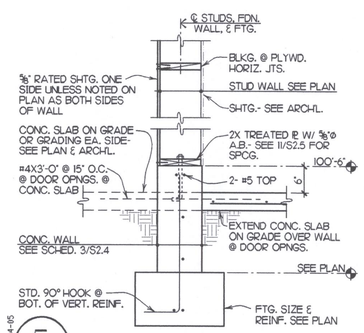

04825 S204-05 — 5 — 3/4" = 1'-0"

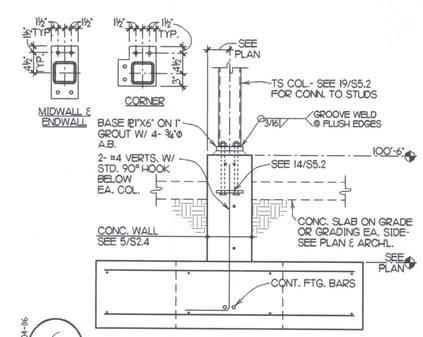

04825 S204-06 — 6 — 3/4" = 1'-0"

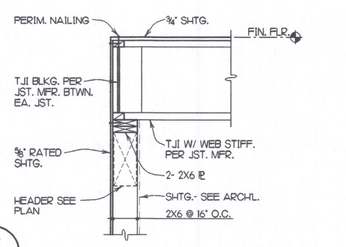

04825 S204-07 — 7 — 3/4" = 1'-0"

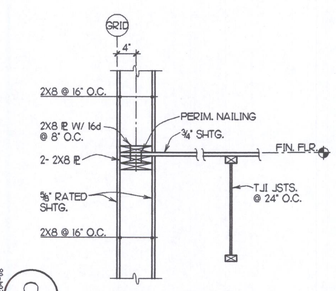

04825 S204-08 — 8 — 3/4" = 1'-0"

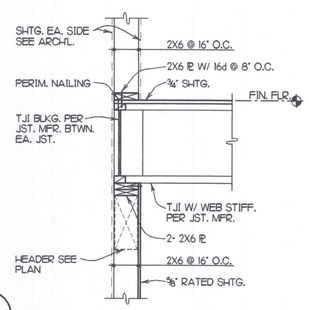

04825 S204-09 — 9 — 3/4" = 1'-0"

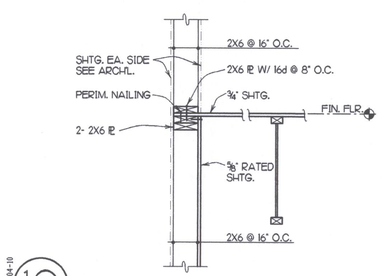

04825 S204-10 — 10 — 3/4" = 1'-0"

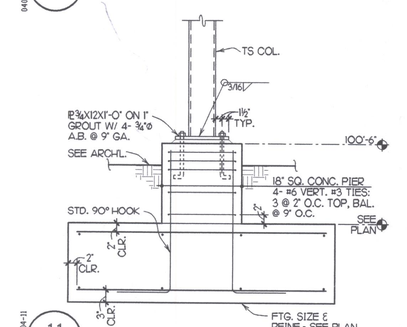

04825 S204-11 — 11 — 3/4" = 1'-0"

No.	DATE	BY
4		
3		
2		
1		

STRUCTURAL DESIGN NORTHWEST INC.
928 W. Sprague Ave., Suite 581
Spokane, WA 99201
(509) 456-5253

ZECK BUTLER ARCHITECTS PS
The Paulsen Center 421 W Riverside Suite 220 Spokane WA 99201 t 509 . 456 . 8236 f 509 . 747 . 0570
e www.zeckbutler.com

SHEET TITLE: VEHICLE STORAGE BUILDING

PROJECT TITLE: GRANT COUNTY PUBLIC WORKS DEPARTMENT
ROAD DISTRICT NO. 9 SHOP FACILITY
QUINCY, WASHINGTON

SEAL: GERRICK A. DUNCAN — STATE OF WASHINGTON — 15450 — REGISTERED PROFESSIONAL ENGINEER — 7/12/04
EXPIRES 11/08/04

DATE	7/12/04
DRAWN	SSK
CHECKED	GAD
PROJECT NUMBER	0415
DRAWING NO.	S2.4

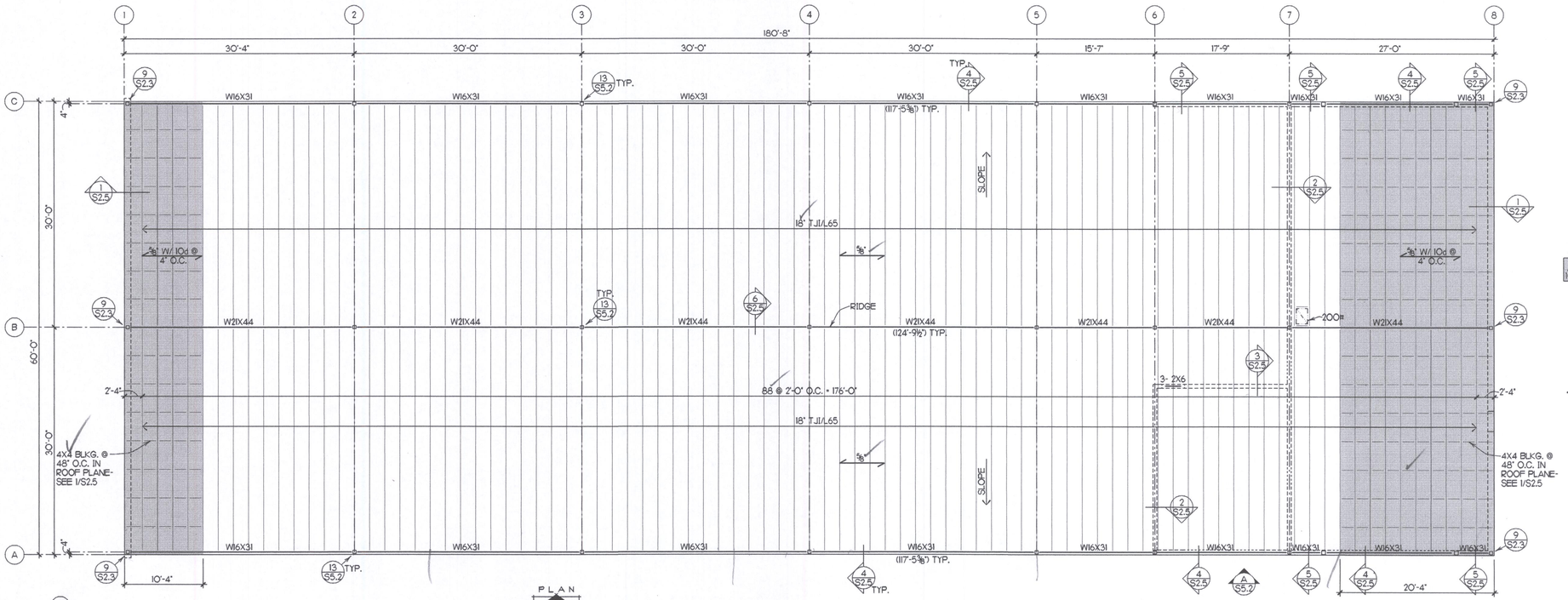

VEHICLE STORAGE BUILDING ROOF FRAMING PLAN

SCALE: ⅛"=1'-0"

ROOF FRAMING PLAN NOTES

⅝" 10d @ 4" O.C. — INDICATES EXTENT OF ROOF SHEATHING WITH SPECIAL NAILING AND BLOCKING AT ALL PANEL EDGES. PROVIDE BLOCKING AT ALL PANEL JOINTS AND 10d COMMON OR SHORT COMMON @ 4" O.C. AT ALL SUPPORTED PANEL EDGES, ALL BLOCKED EDGES, AND ALL PERIMETER WALL LINES; @ 12" O.C. TO ALL INTERMEDIATE SUPPORTS. SEE DETAILS FOR ADDITIONAL NAILING REQUIREMENTS. INDICATES SPAN DIRECTION OF ⅝" 32/16 APA RATED SHEATHING (NO WAFERBOARD).

( ) — INDICATES TOP OF FRAMING ELEVATION.

⅝" — INDICATES SPAN DIRECTION OF ⅝" 32/16 APA RATED SHEATHING (NO WAFERBOARD). SEE PLAN FOR TYP. LAYOUT. NAIL W/ 10d COMMON OR SHORT COMMON NAILS @ 6" O.C. ALL SUPPORTED PANEL EDGES AND ALL PERIMETER WALL LINES (TO BLOCKING); @ 12" O.C. TO ALL INTERMEDIATE SUPPORTS. SEE DETAILS FOR ADDITIONAL NAILING REQUIREMENTS.

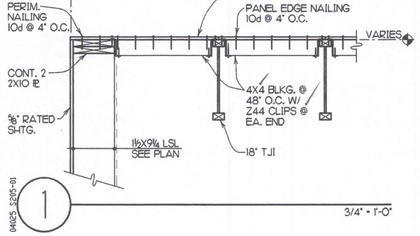

1 — 3/4" = 1'-0"

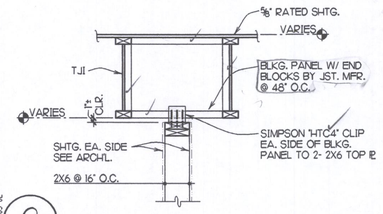

2 — 3/4" = 1'-0"

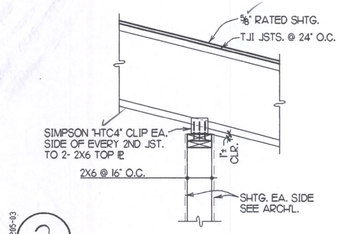

3 — 3/4" = 1'-0"

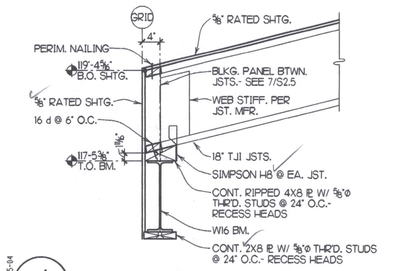

4 — TYPICAL EAVE CONDITION — 3/4" = 1'-0"

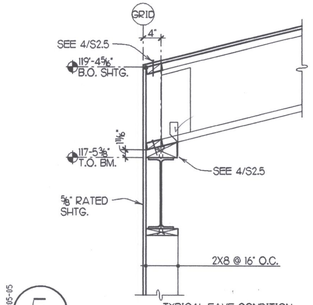

5 — TYPICAL EAVE CONDITION — 3/4" = 1'-0"

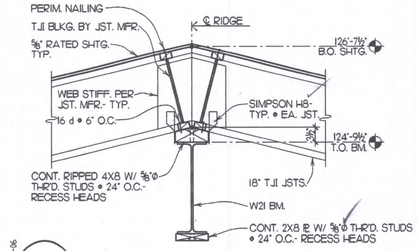

6 — TYPICAL RIDGE CONDITION — 3/4" = 1'-0"

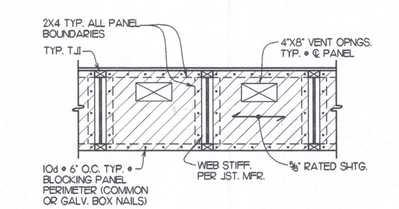

7 — TYPICAL BLOCKING PANEL ELEVATION — 3/4" = 1'-0"

1997 U.B.C. / TABLE NO. 23-II-B-1 - NAILING SCHEDULE (PARTIAL)
TO BE USED EXCEPT WHERE OTHERWISE STATED

CONNECTION	NAILING[1]
1. JOIST TO SILL OR GIRDER, TOENAIL	3- 8d
2. BRIDGING TO JOIST, TOENAIL EACH END	2- 8d
3. 1"X6" SUBFLOOR OR LESS TO EACH JOIST, FACE NAIL	2- 8d
4. WIDER THAN 1"X6" SUBFLOOR TO EACH JOIST, FACE NAIL	3- 8d
5. 2" SUBFLOOR TO JOIST OR GIRDER, BLIND AND FACE NAIL	2- 16d
6. SOLE PLATE TO JOIST OR BLOCKING, TYPICAL FACE NAIL	16d AT 16" O.C.
SOLE PLATE TO JOIST OR BLOCKING, AT BRACED WALL PANELS	3- 16d PER 16"
7. TOP PLATE TO STUD, END NAIL	2- 16d
8. STUD TO SOLE PLATE	4-8d, TOENAIL OR 2- 16d, END NAIL
9. DOUBLE STUDS, FACE NAIL	16d AT 24" O.C.
10. DOUBLED TOP PLATES, TYPICAL FACE NAIL	16d AT 16" O.C.
DOUBLE TOP PLATES, LAP SPLICE	8- 16d
11. BLOCKING BETWEEN JOISTS OR RAFTERS TO TOP PLATE, TOENAIL	3- 8d
12. RIM JOIST TO TOP PLATE, TOENAIL	8d AT 6" O.C.
13. TOP PLATES, LAPS AND INTERSECTIONS, FACE NAIL	2- 16d
14. CONTINUOUS HEADER, TWO PIECES	16d AT 16" O.C. ALONG EACH EDGE
15. CEILING JOISTS TO PLATE, TOENAIL	3- 8d
16. CONTINUOUS HEADER TO STUD, TOENAIL	4- 8d
17. CEILING JOISTS, LAPS OVER PARTITIONS, FACE NAIL	3- 16d
18. CEILING JOISTS TO PARALLEL RAFTERS, FACE NAIL	3- 16d
19. RAFTER TO PLATE, TOENAIL	3- 8d
20. 1" BRACE TO EACH STUD AND PLATE, FACE NAIL	2- 8d
21. 1"X8" SHEATHING OR LESS TO EACH BEARING, FACE NAIL	2- 8d
22. WIDER THAN 1"X8" SHEATHING TO EACH BEARING, FACE NAIL	3- 8d
23. BUILT-UP CORNER STUDS	16d AT 24" O.C.
24. BUILT-UP GIRDERS AND BEAMS	20d AT 32" O.C. AT TOP AND BOT., STAGGERED 2- 20d AT ENDS AND AT EACH SPLICE

8 — COMMON OR BOX NAILS MAY BE USED EXCEPT WHERE OTHERWISE STATED.
NOTE: END JOINTS IN DOUBLE TOP PLATES SHALL BE OFFSET AT LEAST 48 INCHES.

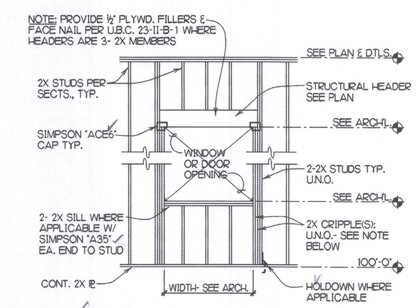

9 — TYPICAL OPENING FRAMING IN BEARING WALL — 1/4" = 1'-0"
NOTE: (1 CRIPPLE @ OPNG. UP TO 4'-0" OR 2 CRIPPLES @ OPNG. OVER 4'-0" TO 8'-8")

HOLDOWN	ANCH. BOLT	EMBEDMENT
HD2A	⅝"ø	9" MIN.

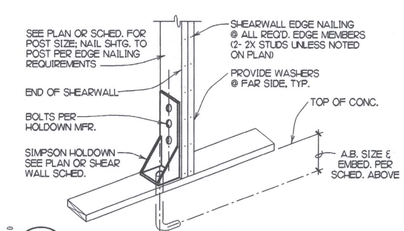

10 — TYPICAL HOLDOWN DETAIL
NOTE: LOCATE HOLDOWN @ SIDE OF JAMB STUDS OPP. SHEAR WALL EXCEPT @ OPNGS.

SHEAR WALL SCHEDULE

MARK	SHEATHING (1)	BLKG. REQ'D. (2)	NAILING (3) EDGE	NAILING (3) FIELD	ANCH. BOLTS (4)
	PLYWOOD	YES	4" O.C.	12" O.C.	16" O.C.
	PLYWOOD	YES	6" O.C.	12" O.C.	24" O.C.

NOTES:

1. SHEATHING: "PLYWD." = ⅝" NOM. (19/32" MIN.), 32/16 APA RATED SHEATHING W/ EXTERIOR GLUE. APPLY SHEARWALL SHEATHING AND NAILING ON ONE SIDE OF WALL, UNLESS NOTED ON PLAN AS BOTH SIDES OF WALL.
2. SOLID 2X MIN. BLOCKING IS REQUIRED BEHIND ALL HORIZONTAL PANEL EDGES WHERE NOTED "YES". EDGE NAILING APPLIES AT BLOCKING AS WELL AS ALL OTHER PANEL EDGES. VERTICAL PANEL EDGES SHALL FALL ON STUDS.
3. NAILING: NAILING OF PLYWD. SHALL BE 10d COMMON OR GALV. BOX NAILS (0.128"ø X 3" MIN.), HEADS DRIVEN FLUSH WITH SHEATHING SURFACE. EDGE NAILING APPLIES TO ALL PANEL EDGES INCLUDING TOP AND BOTTOM PLATES AND TO NAILING TO MEMBERS BOLTED TO HOLDOWNS. FIELD NAILING APPLIES TO ALL INTERMEDIATE STUDS.
4. WALL ANCHOR BOLTS SHALL BE ⅝"ø WITH WASHER, MINIMUM 8" EMBEDMENT IN CONCRETE, AND SHALL NOT BE LET-IN TO PLATE. MAX. SPACING AS NOTED. SEE 10/S2.5 FOR HOLDOWN ANCHOR BOLTS.
5. SEE PLAN AND TYPICAL HOLDOWN DTL. 10/S2.5 FOR HOLDOWN REQMTS. HOLDOWNS SHALL BE FASTENED TO 2- 2X POST, UNLESS NOTED.
6. SEE PLAN AND 19/S5.2 FOR TS COLUMNS LOCATED IN SHEARWALLS.

11 — 3/4" = 1'-0"

No.	DATE	BY
4		
3		
2		
1		

STRUCTURAL DESIGN NORTHWEST INC.
926 W. Sprague Ave., Suite 581
Spokane, WA 99201
(509) 456-5253

ZECK BUTLER ARCHITECTS PS
The Pratton Center 421 W Riverside Suite 220 Spokane WA 99201 t 509.456.8235 f 509.747.0570
e www.zeckbutler.com

SHEET TITLE: VEHICLE STORAGE BUILDING

PROJECT TITLE: GRANT COUNTY PUBLIC WORKS DEPARTMENT
ROAD DISTRICT NO. 9 SHOP FACILITY
QUINCY, WASHINGTON

SEAL: GARRICK A. DUNN — STATE OF WASHINGTON — 15450 — REGISTERED PROFESSIONAL ENGINEER — 7/8/04
EXPIRES 11/08/04

DATE	7/12/04
DRAWN	SSK
CHECKED	GAD
PROJECT NUMBER	0415
DRAWING NO.	S2.5

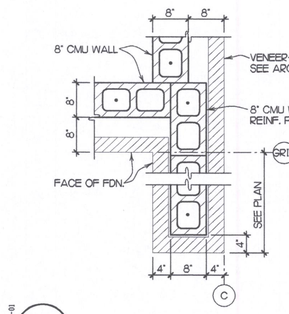

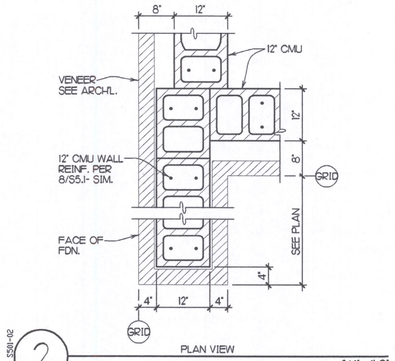

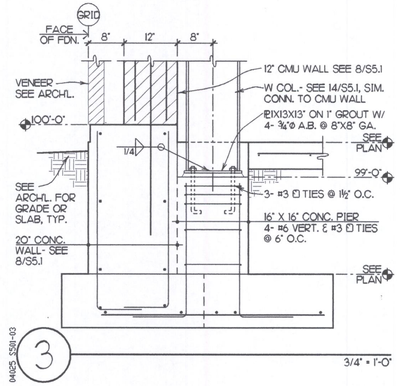

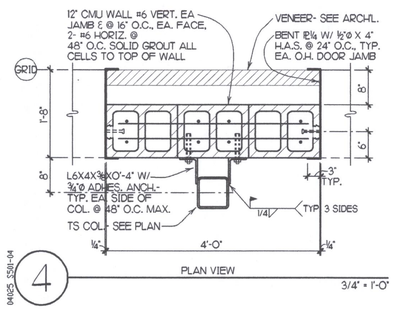

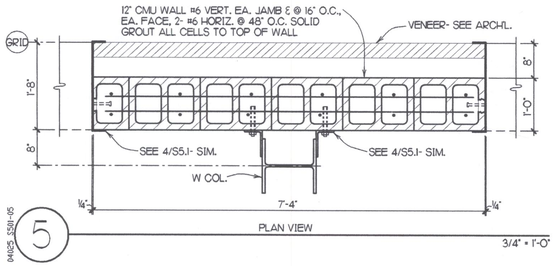

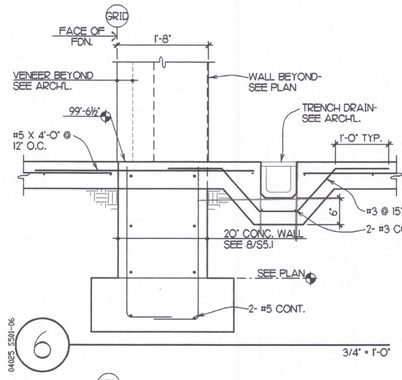

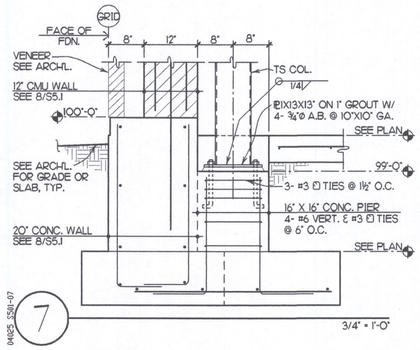

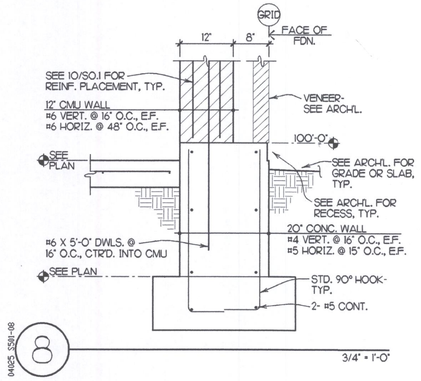

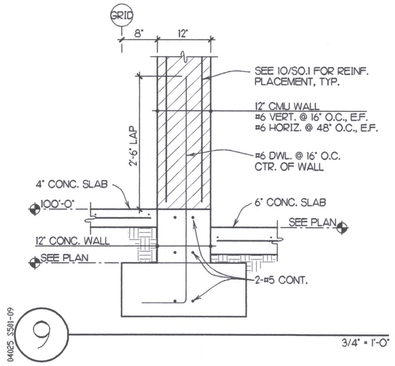

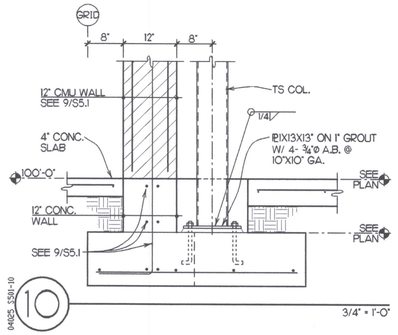

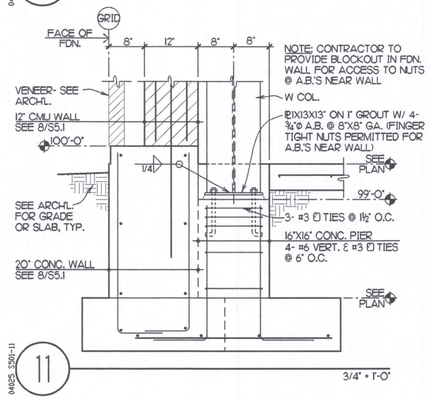

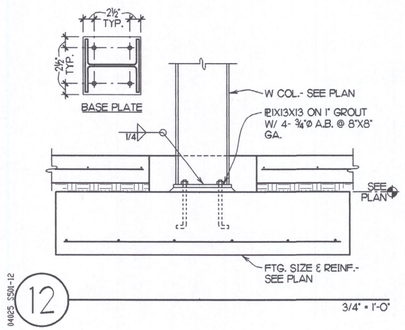

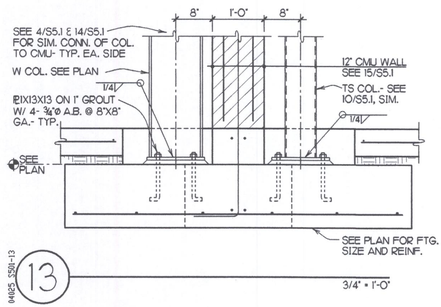

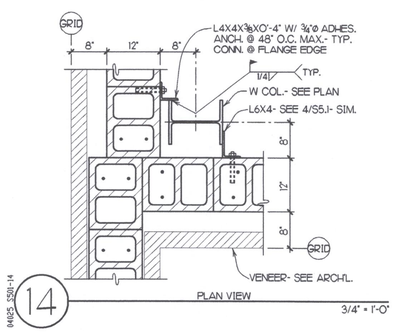

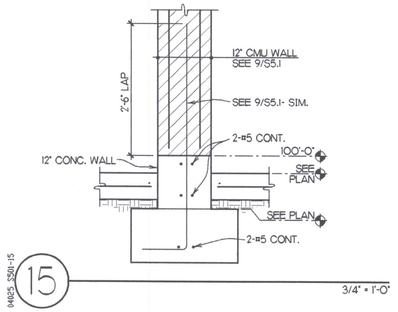

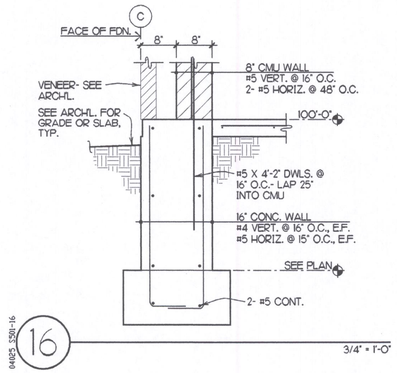

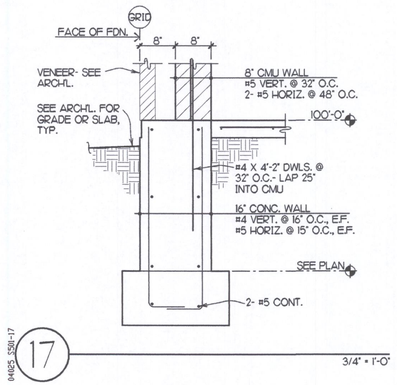

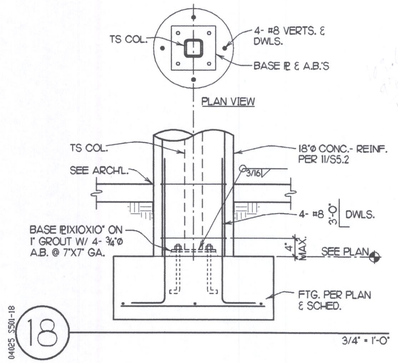

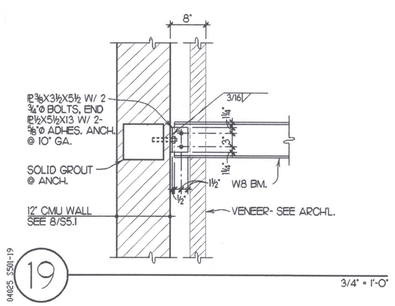

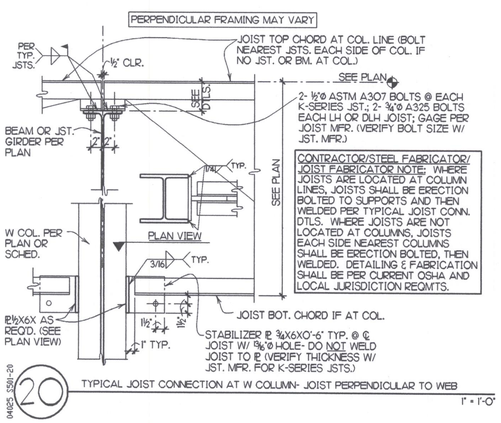

CONTRACTOR/STEEL FABRICATOR/ JOIST FABRICATOR NOTE: WHERE JOISTS ARE LOCATED AT COLUMN LINES, JOISTS SHALL BE ERECTION BOLTED TO SUPPORTS AND THEN WELDED PER TYPICAL JOIST CONN. D'TLS. WHERE JOISTS ARE NOT LOCATED AT COLUMNS, JOISTS EACH SIDE NEAREST COLUMNS SHALL BE ERECTION BOLTED, THEN WELDED. DETAILING & FABRICATION SHALL BE PER CURRENT OSHA AND LOCAL JURISDICTION REQM'TS.

No.	DATE	BY
4		
3		
2		
1		

STRUCTURAL DESIGN NORTHWEST INC.
928 W. Sprague Ave., Suite 581
Spokane, WA 99201
(509) 456-5253

ZECK BUTLER ARCHITECTS PS
The Pavilion Center 421 W Riverside Suite 220 Spokane WA 99201 t 509 . 456 . 8236 f 509 . 747 . 0570
© www.zeckbutler.com

SHEET TITLE: DETAILS

PROJECT TITLE: GRANT COUNTY PUBLIC WORKS DEPARTMENT
ROAD DISTRICT NO. 3 SHOP FACILITY
QUINCY, WASHINGTON

SEAL: GARRICK A. DUNN, STATE OF WASHINGTON, 15450, REGISTERED PROFESSIONAL ENGINEER — EXPIRES 11/08/04

DATE	7/12/04
DRAWN	SSK
CHECKED	GAD
PROJECT NUMBER	0415
DRAWING NO.	S5.1

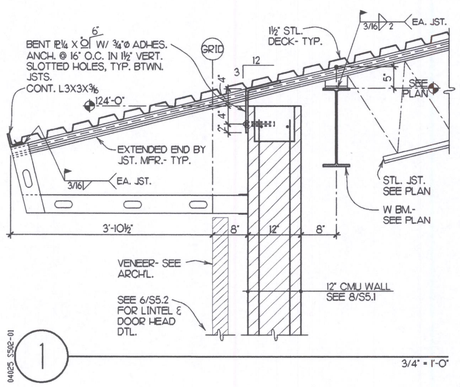

1 — 3/4" = 1'-0"

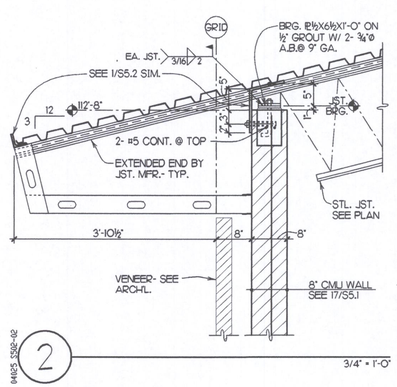

2 — 3/4" = 1'-0"

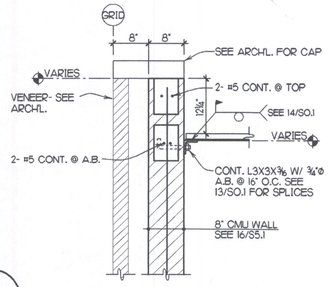

3 — 3/4" = 1'-0"

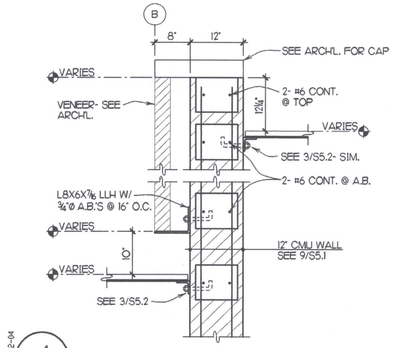

4 — 3/4" = 1'-0"

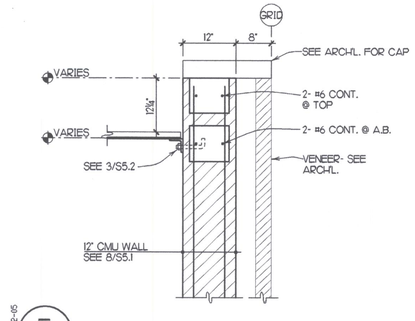

5 — 3/4" = 1'-0"

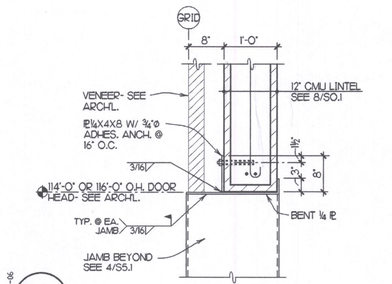

6 — 3/4" = 1'-0"

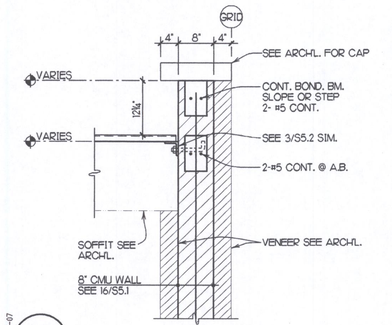

7 — 3/4" = 1'-0"

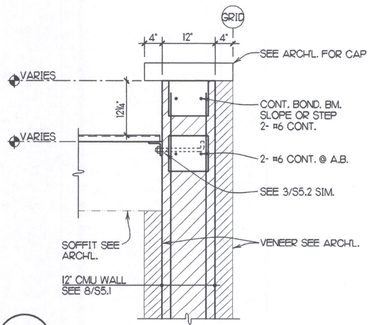

8 — 3/4" = 1'-0"

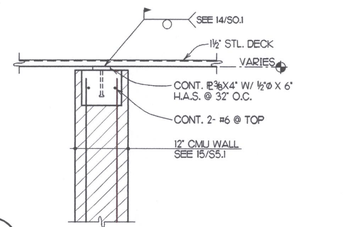

9 — 3/4" = 1'-0"

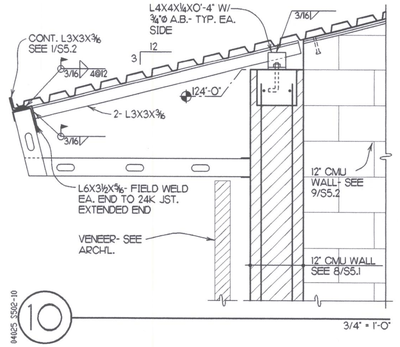

10 — 3/4" = 1'-0"

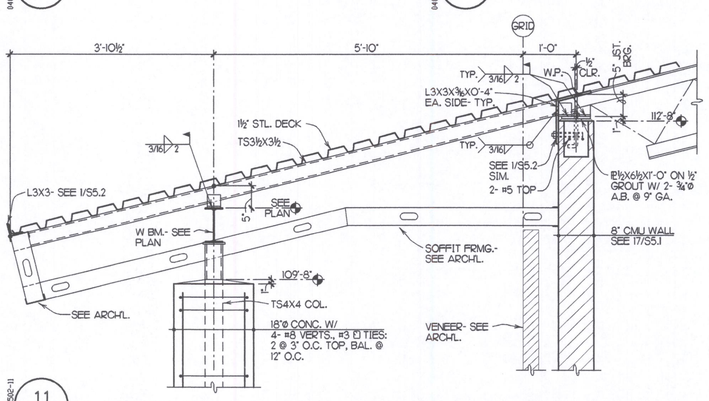

11 — 3/4" = 1'-0"

4.17
6.23
1.50
12'

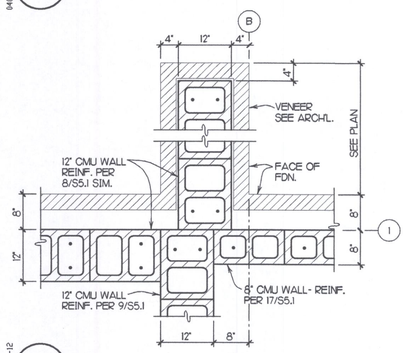

12 — 3/4" = 1'-0"

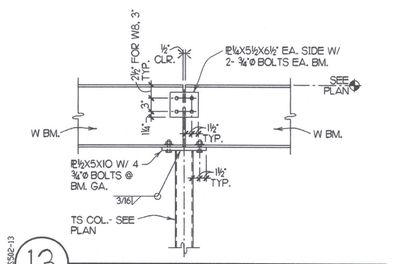

13 — 3/4" = 1'-0"

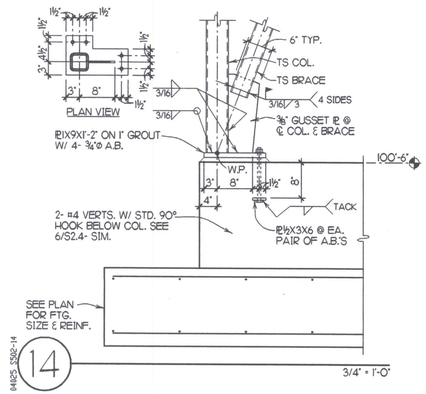

14 — 3/4" = 1'-0"

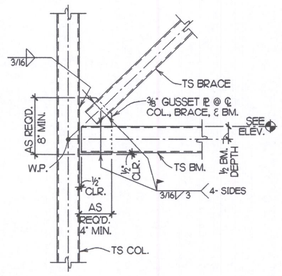

15 — 3/4" = 1'-0"

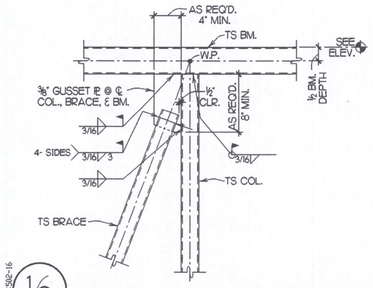

16 — 3/4" = 1'-0"

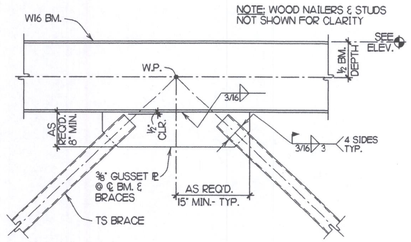

17 — 3/4" = 1'-0"

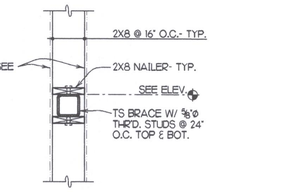

18 — 3/4" = 1'-0"

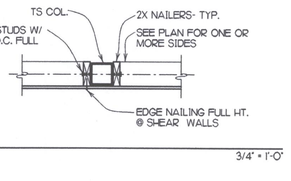

19 — 3/4" = 1'-0"

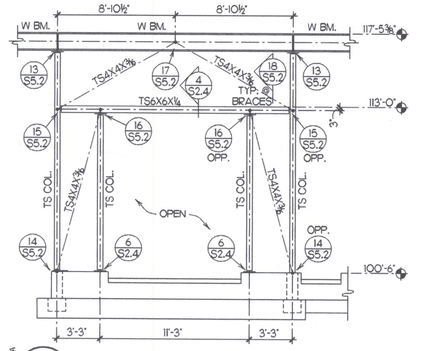

A — ELEVATION — 3/16" = 1'-0"

No.	DATE	BY
4		
3		
2		
1		

STRUCTURAL DESIGN NORTHWEST INC.
926 W. Sprague Ave., Suite 581
Spokane, WA 99201
(509) 458-5253

ZECK BUTLER ARCHITECTS PS
The Poulson Center 421 W Riverside Suite 220 Spokane WA 99201 t 509 . 456 . 8236 f 509 . 747 . 0250
e www.zeckbutler.com

SHEET TITLE: DETAILS

PROJECT TITLE: GRANT COUNTY PUBLIC WORKS DEPARTMENT
ROAD DISTRICT NO. 9 SHOP FACILITY
QUINCY, WASHINGTON

SEAL: GARRICK A. DUNN, STATE OF WASHINGTON, 15450, REGISTERED PROFESSIONAL ENGINEER — 7/8/04
EXPIRES 11/08/04

DATE	7/12/04
DRAWN	SSK
CHECKED	GAD
PROJECT NUMBER	0415
DRAWING NO.	S5.2

VENTILATION LEGEND

DESCRIPTION	SYMBOL
DUCT SECTION(POSITIVE PRESSURE (SUPPLY)	OR
DUCT SECTION(NEGATIVE PRESSURE (RET,EXH,OSA)	OR
SUPPLY AIR FLOW	
RETURN OR EXHAUST AIR FLOW	
INCLINE RISE IN DUCT	
INCLINE DROP IN DUCT	
FIRE/SMOKE DAMPER OR FIRE DAMPER F/SD OR FD	
FLEXIBLE DUCT CONNECTOR	
VOLUME DAMPER MVD	OR
SPLITTER DAMPER	OR
VOLUME EXTRACTOR	
OPPOSED BLADE DAMPER OBD	OR
PARALLEL BLADE DAMPER PBD	OR
DAMPER MOTOR	M
INTERNAL DUCT LINER	DIM
TURNING VANES	
DUCT SIZE (FIRST FIGURE IS SIDE SHOWN)	28X12
SOUND ATTENUATOR SA	
FLEXIBLE DUCTWORK (ROUND)	OR
ACCESS DOORS, VERTICAL OR HORIZONTAL AD	AD 18X18
POINT OF CHANGE IN DUCT CONSTRUCTION (BY PRESSURE CLASSIFICATION)	
DUCTWORK (ROUND) 10" ϕ	
DUCTWORK (FLAT OVAL) 20X10	
TRANSITION (IN ROUND OR FLAT OVAL DUCT)	
SUPPLY DIFFUSER	1 CD 18X18 / 200 — TYPE, NK SIZE, CFM
GRILLE OR REGISTER	1 RG 12X8 / 200 — TYPE, SIZE, CFM
LOUVER, DOOR OR WALL	A 24X24LVR / 200 — SIZE (LVR), CFM
EQUIPMENT DESIGNATION	CU 1 — EQUIP. TYPE, NUMBER

SYMBOLS LEGEND

PLUMBING FIXTURE SYMBOL	A
P-TRAP	
AIR SEPARATOR	
FLEXIBLE PIPING CONNECTOR	
STRAINER WITH BLOWDOWN VALVE	
STRAINER	
BACKFLOW PREVENTION ASSEMBLY	BFP
STOP AND WASTE VALVE	SWV
BUTTERFLY VALVE	BFV
BALL VALVE	BV
GATE VALVE	GV
CHECK VALVE	CV
GLOBE VALVE	GLV
PLUG VALVE	PV
PRESSURE REDUCING VALVE	PRV
RELIEF VALVE	RV
AUTOMATIC CONTROL VALVE (TWO-WAY)	ACV
AUTOMATIC CONTROL VALVE (THREE-WAY)	ACV
SOLENOID VALVE	SOL
THERMOSTATIC EXPANSION VALVE	TEV
CALIBRATED BALANCING VALVE	CBV
AUTOMATIC FLOW CONTROL VALVE	FCV
FLOAT & THERMOSTATIC STEAM TRAP	F&T
BUCKET STEAM TRAP	
THERMOSTATIC STEAM TRAP	
EXPANSION LOOP	
UNION	
CONCENTRIC REDUCER	
ECCENTRIC REDUCER	
FLOW METERING STATION	
AUTOMATIC AIR VENT	AAV
MANUAL AIR VENT	MAV
PIPING ANCHOR	
ALIGNMENT GUIDE	
EXPANSION JOINT	EJ
THERMOMETER	
PRESSURE GAUGE	
THERMOSTAT	T
HUMIDISTAT	H
THRUST BLOCK	TB
FIRE HYDRANT	FH
CAPPED PIPE	
ELBOW, TURNED UP	
ELBOW, TURNED DOWN	
TEE, OUTLET UP	
TEE, OUTLET DOWN	
SPEED CONTROL SWITCH (WALL MOUNT)	SC
WALL SWITCH	S

ABBREVIATIONS

DESCRIPTION	SYMBOL
VENT THROUGH ROOF	VTR
ACID RESISTING VENT THROUGH ROOF	ARVTR
ACCESS DOOR, (ACCESS PANEL)	AD, (AP)
INVERT ELEVATION	I.E.
CAST IRON	CI
NORMALLY OPEN	NO
NORMALLY CLOSED	NC
CEILING DIFFUSER	CD
RETURN REGISTER	RR
RETURN GRILLE	RG
EXHAUST REGISTER	ER
EXHAUST GRILLE	EG
SUPPLY REGISTER	SR
SUPPLY GRILLE	SG
TRANSFER GRILLE	TG
DOOR GRILLE	DG
LOUVER	LVR
POINT OF CONNECTION	POC
OUTSIDE AIR	OSA
RETURN	RET
EXHAUST	EXH

AIR HANDLING UNIT SCHEDULE

7009-12

SYMBOL	SERVING	CFM	KW	STEPS	TSP IN. W.G.	TEMP RISE	BLOWER MOTOR HP	BLOWER MOTOR VOLT	BLOWER MOTOR PH	WEIGHT	REMARKS	MFR. / MODEL
AHU-1	SHOP	9000	170	4	1.5"	60°	5	480	3	1,200 lbs.	INTERLOCK W/ EF-4,5	HASTINGS ELECTROFLO SBEM-215
AHU-2	WELDING	3000	56	4	1.5"	60°	1.5	480	3	490 lbs.	INTERLOCK W/ EF-6	HASTINGS ELECTROFLO SBEM-112

GAS UNIT HEATER SCHEDULE

SYMBOL	TYPE	SERVING	CFM	INPUT MBH	OUTPUT MBH	HP/VOLT/PH	RPM	WEIGHT	MFR/SERIES
UH-1	PROPANE	WASHBAY	1230	100	80	3/4 /115/1	1050	200 lbs.	REZNOR SCA 100

OIL HEATER SCHEDULE

SYMBOL	TYPE	SERVING	CFM	INPUT MBH	OUTPUT MBH	GPH	HP/VOLT/PH	RPM	WEIGHT	MFR/SERIES
OH-1	OIL	SHOP	3200	173	142	1.25	1/2 /115/1	1725	410	REZNOR OB 140
OH-2	OIL	SHOP	3200	173	142	1.25	1/2 /115/1	1725	410	REZNOR OB 140
OH-3	OIL	SHOP	3200	173	142	1.25	1/2 /115/1	1725	410	REZNOR OB 140
OH-4	OIL	SHOP	3200	173	142	1.25	1/2 /115/1	1725	410	REZNOR OB 140
OH-5	OIL	WELDING	2000	118	97	0.85	1/8 /115/1	1725	355	REZNOR OB 95

WASTE OIL HEATER SCHEDULE

SYMBOL	TYPE	SERVING	CFM	INPUT MBH	OUTPUT MBH	GPH	HP/VOLT/PH	RPM	WEIGHT W/ FULL TANK	REMARKS	MFR/SERIES
WOH-1	OIL	SHOP	3200	235	188	1.7	3/4 /115/1	1750	2400 lbs.	STAND ST1, TANK OT-250	REZNOR RAD 235

EXHAUST FAN SCHEDULE

8004-02

SYMBOLS	SERVING	TYPE	CFM	SP (INCH)	RPM	MOTOR HP	MOTOR VOLT	MOTOR PH	DRIVE	SONES	WEIGHT	CONTROL	REMARKS	MFR/MODEL
EF-1	TOILETS	CABINET	650	0.375	1325	.323 W	115	1	DIR	3.3	75 lbs.	TIME OF DAY	BDD	COOK GN-720
EF-2	SHOP	C.I.L.	700	3.0	3361	1.0	208	3	BELT	-	130 lbs.	DIV. 16	BDD	CARMON CM-10SL
EF-3	SHOP	C.I.L.	700	3.0	3361	1.0	208	3	BELT	-	130 lbs.	DIV. 16	BDD	CARMON CM-10SL
EF-4	SHOP	CABINET	4400	.625	444	1.0	208	3	BELT	9.0	400 lbs.	DIV. 16	BDD	COOK / DB-18
EF-5	SHOP	CABINET	4400	.625	444	1.0	208	3	BELT	9.0	400 lbs.	DIV. 16	BDD	COOK / DB-18
EF-6	WELDING	PROP.	3000	.25	850	1/2	115	1	BELT	15.0	100 lbs.	DIV. 16	BDD	COOK / 20 XLW
EF-7	WASHBAY	PROP.	3000	.125	850	1/2	115	1	BELT	15.0	100 lbs.	DIV. 16	BDD	COOK / 20 XLW

NOTES:
1. C.I.L. – CENTRIFUGAL IN-LINE EXHAUSTER
2. U.R. – UPBLAST ROOF EXHAUSTER
3. SSSC – SOLID STATE WALL SPEED CONTROLLER
4. BDD – GRAVITY BACKDRAFT DAMPER

GRILLE, REGISTER & DIFFUSER SCHEDULE

SYMBOL	S	R	E	TYPE	PANEL SIZE	NECK SIZE	MATERIAL	FINISH	DAMPER	REMARKS	MFR/SERIES
1	X	.	.	CEILING DIFF.	24X24	SEE DRGS	ALUMINUM	WHITE	NO	LAY-IN FRAME, MOD. CORE	TUTTLE & BAILEY/AQD
2	X	.	.	CEILING DIFF.	–	SEE DRGS	ALUMINUM	WHITE	YES	SURFACE FRAME, MOD. CORE	TUTTLE & BAILEY/AQD
3	X	.	.	SUPPLY GRILLE	–	SEE DRGS	STEEL	WHITE	NO	SURFACE FRAME, DBL. DEFL.	TUTTLE & BAILEY T54
4	.	X	.	CEILING GRILLE	12x24	10x22	ALUMINUM	WHITE	NO	LAY-IN FRAME, EGG CRATE	TUTTLE & BAILEY/CRE500
5	.	X	X	RET./EXH. GRILLE	.	SEE DRGS	STEEL	WHITE	NO	SURFACE FRAME, 42" DEFL.	TUTTLE & BAILEY/T700

FURNACE UNITS AND HEAT PUMP SCHEDULE

SYMBOL	CFM	E.S.P. IN IN.	MIN. OSA	TOTAL COOLING MBH	SENSIBLE COOLING MBH	ELECTRIC DATA: ELECTRIC HEATING STAGE 1	VOLT/PH	MCA	MOCP	STAGE 2	VOLT/PH	MCA	MOCP	INDOOR FAN MOTOR HP	DRIVE	MCA	MOCP	WEIGHT	CARRIER MODEL #	FC SIZE	HP #	HP VOLT/PH	MCA	MOCP	CARRIER MODEL #	HP SIZE
F-1	800	0.4	300	24.1	18.4	10 KW	208/1	53.8	60	5 KW	208/1	22.7	25	1/3	DIRECT	2.3	15	120 lbs.	CARRIER FC4B024	024	HP-1	208/1	14.7	20	38YSA	024
F-2	800	0.4	300	24.1	18.4	10 KW	208/1	53.8	60	5 KW	208/1	22.7	25	1/3	DIRECT	2.3	15	120 lbs.	CARRIER FC4B024	024	HP-2	208/1	14.7	20	38YSA	024

NOTES:
1. COOLING CONDITIONS: EAT 80°F, EWB 67°F, @ 1500 FT. ELEVATION.
2. HEAT PUMP HEATING CONDITIONS: 17° OAT, 65° EAT.

ELECTRIC WATER HEATER SCHEDULE

SYMBOL	QTY.	TYPE	SERVING	TANK CAPACITY	No. ELEM	OUT TEMP.	ELECTRICAL WATTS	ELECTRICAL VOLT	ELECTRICAL PH	MFR/MODEL
HWT-1	1	RESIDENTIAL	OFFICE	80	2	110	4500	208	1	A.O.SMITH/PEC-80

AIR COMPRESSOR SCHEDULE

EQUIPMENT	SCFM F.A.D.	PSI	HP	VOLT/PH	MFR. / MODEL	RECEIVER
A/C-1	37	150	10	460/3	QUINCY ~~QR-25-F370~~ QT14-10	120 GALLON ASME TANK
A/C-2 (FUTURE)	7.45	100	2	208/3	QUINCY QR-25-F216	60 GALLON ASME TANK

ELECTRIC UNIT HEATER SCHEDULE

7009-11

SYMBOL	SERVING	KW	ELECTRICAL VOLT	ELECTRICAL PHASE	REMARKS	MFR. / MODEL
EUH-1	EQUIP. RM. 204	2	208	3	.	MARKEL F33147S-RP

Item No. 14: Sheet M0.1: Air Compressor Schedule:
CHANGE A/C-1 to Quincy model QT14-10

No.	DATE	BY
4		
3		
2		
1		

CONSULTANT

LS engineering
High Performance Design
7114 Commission Building, West 128 Pacifico Avenue,
Spokane, Washington 99201-3814 Voice 509 747-1301
509 747-2979 Fax 509 747-1066 Home @ lsengcom

ZECK BUTLER ARCHITECTS PS

Z|B[a]

The Pavilion Center 421 W Riverside Suite 220 Spokane WA 99201 | 509 . 455 . 8338 | 509 . 747 . 0570
e www.zeckbutler.com

SHEET TITLE: LEGENDS AND SCHEDULES

PROJECT TITLE: GRANT COUNTY PUBLIC WORKS DEPARTMENT
ROAD DISTRICT NO. 5 SHOP FACILITY
QUINCY, WASHINGTON

SEAL: DAVID B. BUTLER, STATE OF WASHINGTON, 29104, REGISTERED PROFESSIONAL ENGINEER
EXPIRES 3-29-05

DATE	7/12/04
DRAWN	DRD
CHECKED	DBM
PROJECT NUMBER	0415
DRAWING NO.	M0.1

PLUMBING PIPING LEGEND

DESCRIPTION		SYMBOL
DIRECTION OF PIPE GRADE (DOWN)		
DIRECTION OF FLOW		
DRAIN PIPING		D
WATER MAIN PIPING (OUTSIDE BUILDING)		W
COLD WATER PIPING	CW	
COLD SOFT WATER PIPING		SW
TRAP PRIMER PIPING		TP
BLENDED WATER PIPING		B
HOT WATER PIPING (110 DEGF)	HW	
HOT WATER PIPING (140 DEGF)	HW	140
HOT WATER PIPING (180 DEGF)	HW	180
HOT WATER RECIRCULATION PIPING	HWR	
LAWN SPRINKLER PIPING		LS
WALL HYDRANT,(NON-FREEZE WH)	WH,(NFWH)	
HOSE BIBB	HB	
SANITARY SEWER PIPING (OUTSIDE BUILDING)		S
SANITARY WASTE PIPING (ABOVE GRADE)	SAN OR V	
WASTE PIPING (BELOW GRADE)	SAN OR V	
INDIRECT WASTE PIPING		IW
ACID RESISTING WASTE PIPING		ARW
VENT PIPING	V	
ACID RESISTING VENT PIPING		ARV
STORM SEWER PIPING (OUTSIDE BUILDING)		SS
RAIN WATER LEADER PIPING (INSIDE BUILDING)		RWL
GAS PIPING		G
FLOOR DRAIN	FD	OR
FUNNEL FLOOR DRAIN	FFD	
OPEN HUB DRAIN	OHD	
CLEANOUT	CO	OR
CLEANOUT THROUGH FLOOR	COTF	
CLEANOUT THROUGH WALL	COTW	
CLEANOUT TO GRADE	COTG	
ROOF DRAIN , (OVERFLOW ROOF DRAIN)	RD,(ORD)	

PIPING LEGEND

DESCRIPTION	SYMBOL
FUEL OIL SUPPLY PIPING	FOS
FUEL OIL RETURN PIPING	FOR
FUEL OIL TANK VENT	FOV
CHILLED WATER SUPPLY PIPING	CH
CHILLED WATER RETURN PIPING	CHR
REFRIGERANT LIQUID PIPING	RL
REFRIGERANT SUCTION PIPING	RS
CONDENSATE DRAIN PIPING (ABOVE GRADE)	CD
COMPRESSED AIR PIPING	A
COMPRESSED AIR OUTLET	A

PLUMBING FIXTURE CONNECTION DETAILS

GENERAL NOTES:

REFER TO SPECIFICATIONS FOR ADDITIONAL REQUIREMENTS. PROVIDE WATER HAMMER ARRESTORS AS DESCRIBED IN THE SPECIFICATIONS. PROVIDE CLEANOUTS IN ACCORDANCE WITH THE UNIFORM PLUMBING CODE AND THE SPECIFICATIONS.

LOCAL CODES AND ORDINANCES TAKE PRECEDENCE OVER THAT SHOWN HEREIN, IF THEY ARE MORE RESTRICTIVE. THEY DO NOT RELIEVE THE CONTRACTOR OF THE REQUIREMENTS SHOWN HEREIN WHEN THEY DO NOT CONFLICT.

ALL FIXTURES AND EQUIPMENT SHALL BE INSTALLED IN STRICT ACCORDANCE WITH THE MANUFACTURER'S RECOMMENDATIONS. WHERE CONFLICTS OCCUR, BRING THOSE TO THE ATTENTION OF THE DESIGN ENGINEER OR CONTRACTING OFFICER IMMEDIATELY AND BEFORE INSTALLING THE ITEM.

MOUNT ACCESSIBLE FIXTURES AT ADA "BARRIER FREE" MOUNTING HEIGHTS AND AS REQUIRED BY LOCAL CODES AND ARCHITECTURAL DETAILS & ELEVATIONS.

WWA — WATER CLOSET, FV, WALL, ACCESSIBLE

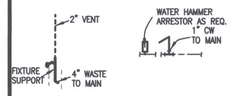

WWS — WATER CLOSET, FV, WALL, STD

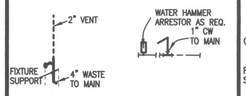

UMA — URINAL MANUAL FV, ACCESSIBLE

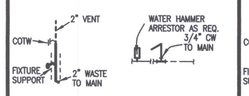

UMS — URINAL, MANUAL FV, STANDARD

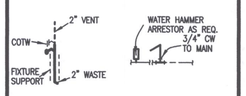

LWA — LAVATORY, WALL, ACCESSIBLE

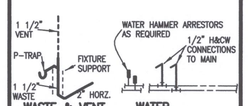

SHA — SHOWER, IN WALL, ACCESSIBLE

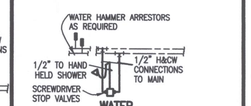

MFS — MOP SINK, FLOOR, STONE

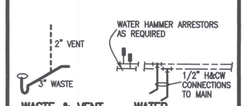

MWI — MOP SINK, WALL, CAST IRON

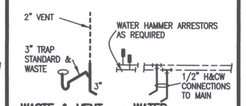

CWD — WATER COOLER, WALL, DUAL LEVEL

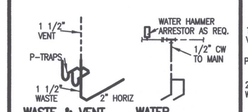

SSL — SINK, SINGLE, LARGE

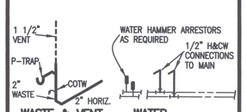

EWS — EMERGENCY SHOWER/EYE WASH

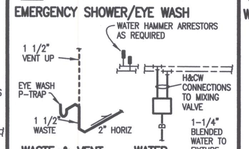

FW2 — WASH FOUNTAIN, WALL, 2 STATION

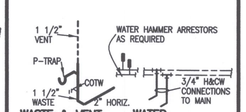

FDB — FLOOR DRAIN, BRONZE, FINISHED

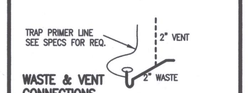

WHS — WALL HYDRANT, SURFACE

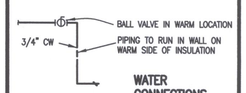

No.	DATE	BY
4		
3		
2		
1		

CONSULTANT:

L&S Engineering
The Commission Building, West 26 Pacific Avenue, Suite 215, Spokane, Washington 99201
(509) 747-2979 Fax (509) 747-2985 lsengr@lsengr.com

ZECK BUTLER ARCHITECTS PS
The Paulsen Center 421 W Riverside Suite 220 Spokane WA 99201 t 509 . 456 . 8235 f 509 . 747 . 0570
e www.zeckbutler.com

SHEET TITLE: PLUMBING FIXTURES

PROJECT TITLE: GRANT COUNTY PUBLIC WORKS DEPARTMENT
ROAD DISTRICT NO. 3 SHOP FACILITY
QUINCY, WASHINGTON

SEAL: D. B. MOORE — STATE OF WASHINGTON — 28104 — REGISTERED PROFESSIONAL ENGINEER
EXPIRES 3-29-05

DATE	7/12/04
DRAWN	DRD
CHECKED	DBM
PROJECT NUMBER	0415
DRAWING NO.	M0.2

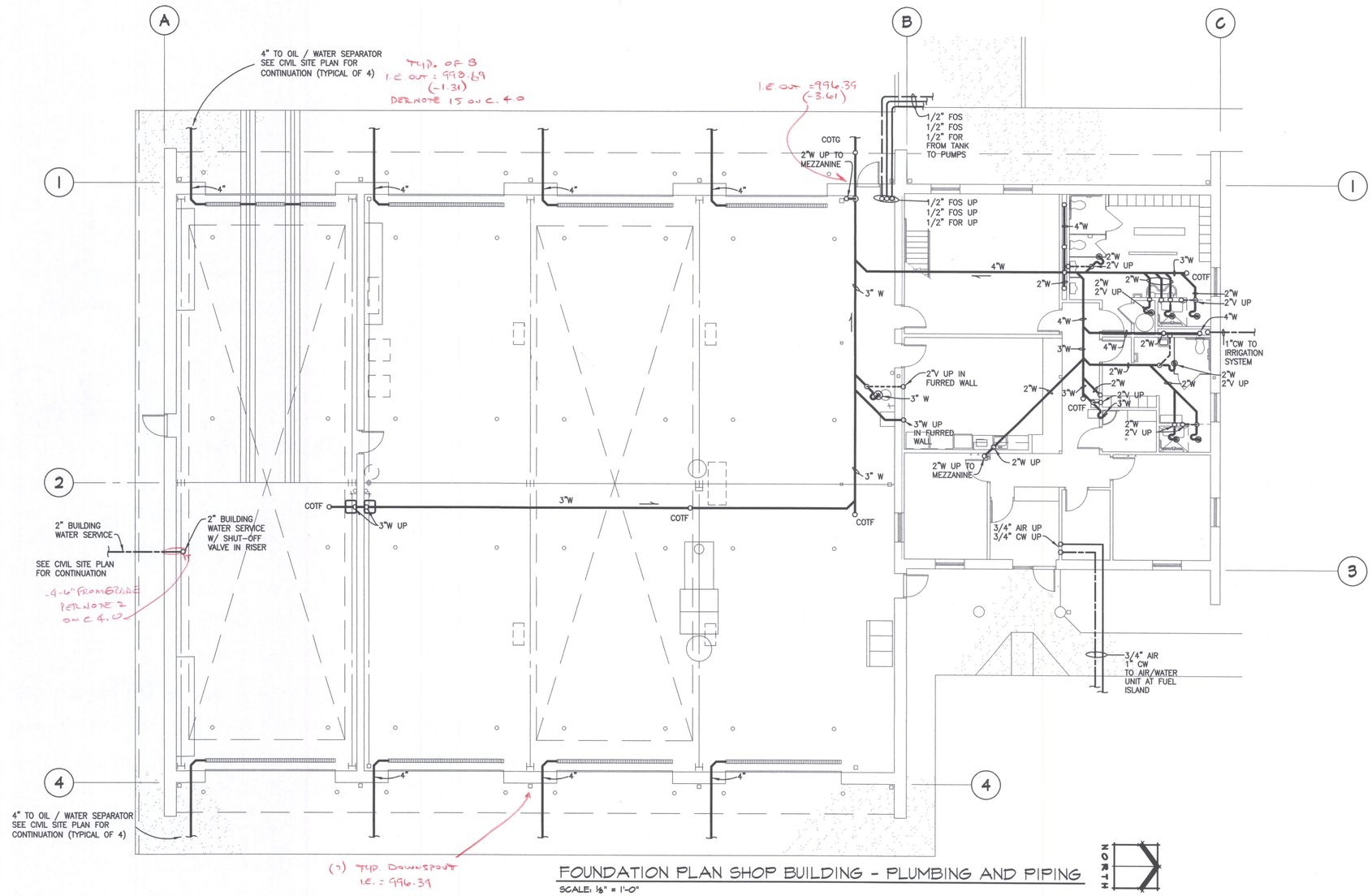

FOUNDATION PLAN SHOP BUILDING - PLUMBING AND PIPING

SCALE: 1/8" = 1'-0"

No.	DATE	BY
4		
3		
2		
1		

CONSULTANT:

L&S Engineering
High Performance Design
The Commission Building, West 216 Pacific Avenue, Suite 211, Spokane, Washington 99201
(509) 747-2979 Fax (509) 747-2686 lseng@lseng.com

ZECK BUTLER ARCHITECTS PS

ZB[a]

The Paulsen Center 421 W Riverside Suite 220 Spokane WA 99201 t 509 . 456 . 8236 f 509 . 747 . 0570
e www.zeckbutler.com

SHEET TITLE: FOUNDATION PLAN SHOP - PLUMBING

PROJECT TITLE: GRANT COUNTY PUBLIC WORKS DEPARTMENT
ROAD DISTRICT NO. 3 SHOP FACILITY
QUINCY, WASHINGTON

SEAL: DAVID B. MOORE, STATE OF WASHINGTON, 29104, REGISTERED PROFESSIONAL ENGINEER
EXPIRES 3-29-05

DATE	7/12/04
DRAWN	DRD
CHECKED	DBM
PROJECT NUMBER	0415
DRAWING NO.	M2.1

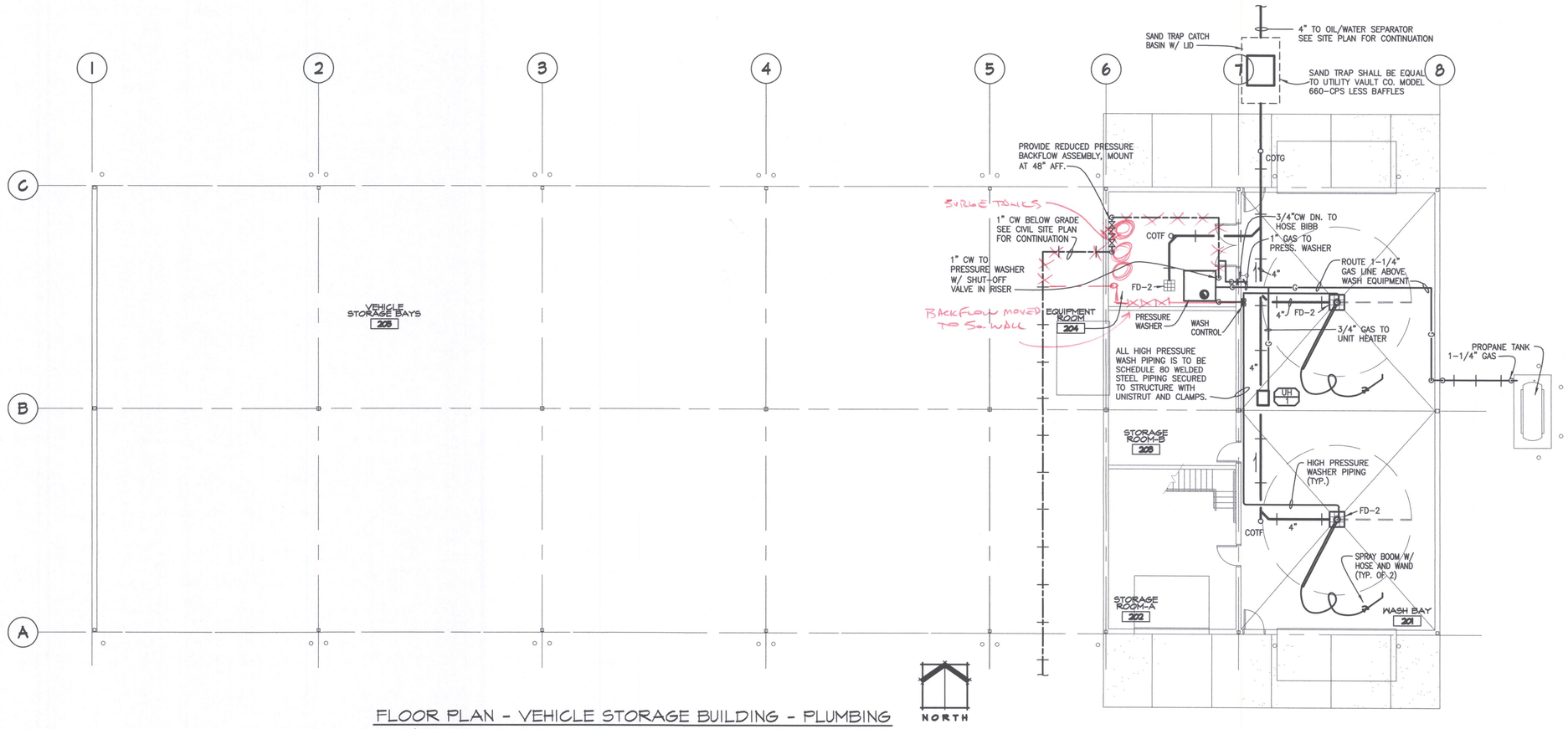

FLOOR PLAN - VEHICLE STORAGE BUILDING - PLUMBING

SCALE: 1/8" = 1'-0"

No.	DATE	BY
4		
3		
2		
1		

CONSULTANT:

L&S Engineering
High Performance Design
The Commission Building, Historic Fort Steilacoom
Suite 210, Spokane, Washington 99201
509/747-2079 Fax 509/747-2928 lsengr@lsengcom

ZECK BUTLER ARCHITECTS PS
ZBa
The Pavilion Center 421 W Riverside Suite 220 Spokane WA 99201 t 509 . 456 . 8236 f 509 . 747 . 0570
e www.zeckbutler.com

SHEET TITLE: WASHBAY PLAN PLUMBING

PROJECT TITLE: GRANT COUNTY PUBLIC WORKS DEPARTMENT
ROAD DISTRICT NO. 3 SHOP FACILITY
QUINCY, WASHINGTON

SEAL: DAVID B. MOORE, STATE OF WASHINGTON, 21904, REGISTERED PROFESSIONAL ENGINEER
EXPIRES 3-29-05

DATE	7/12/04
DRAWN	DRD
CHECKED	DBM
PROJECT NUMBER	0415
DRAWING NO.	M2.2

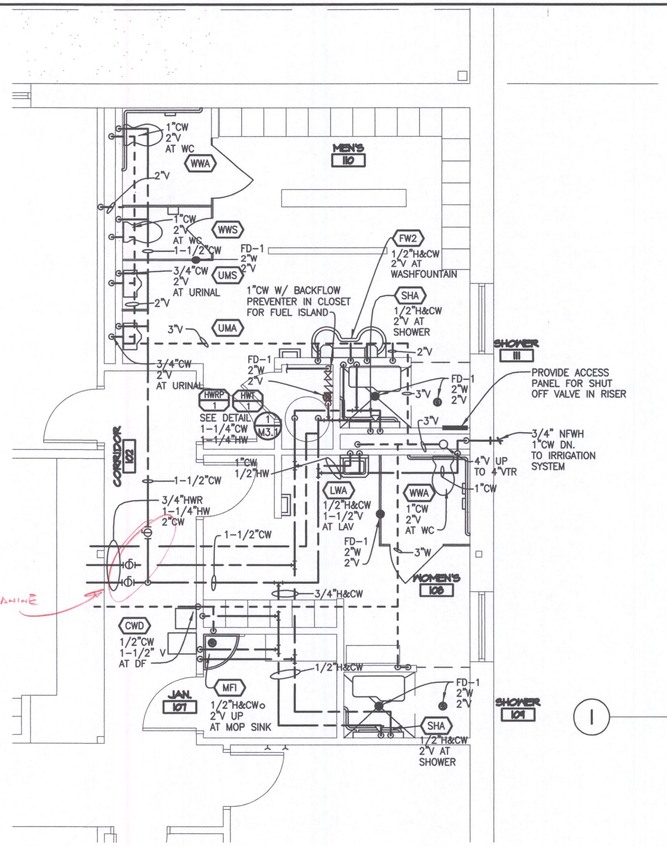

TOILET ROOMS PLAN

SCALE: 1/4" = 1'-0"

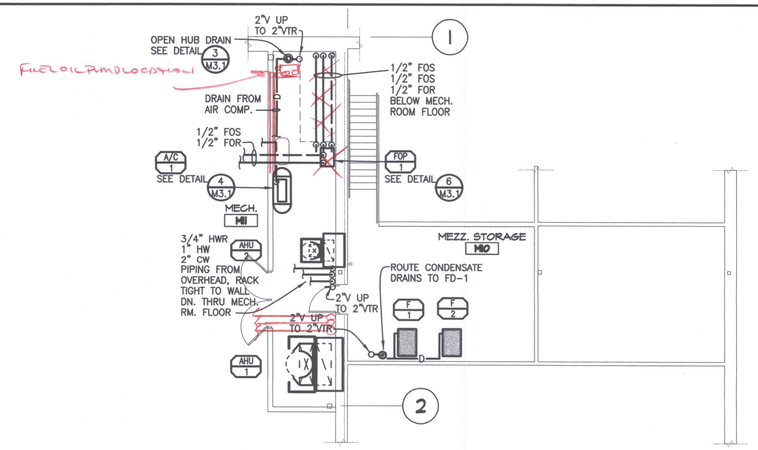

MEZZANINE PLAN-SHOP BUILDING PLUMBING AND PIPING

SCALE: 1/8" = 1'-0"

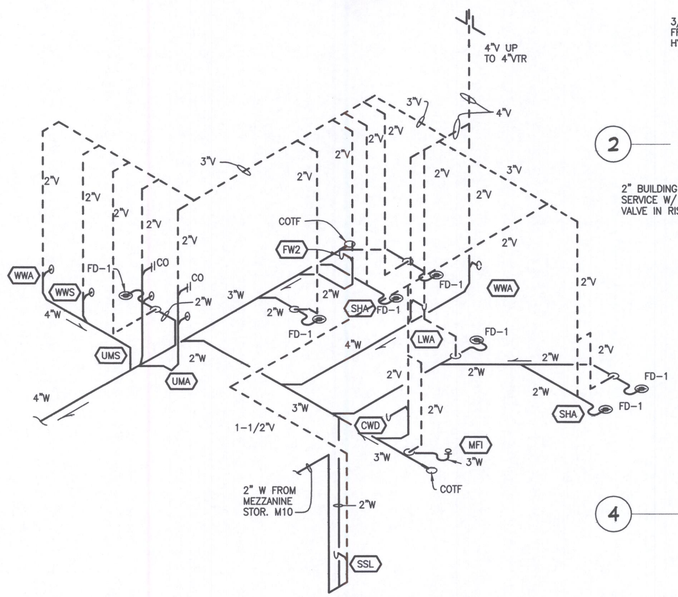

TOILET ROOMS WASTE & VENT RISER DIAGRAM

NTS

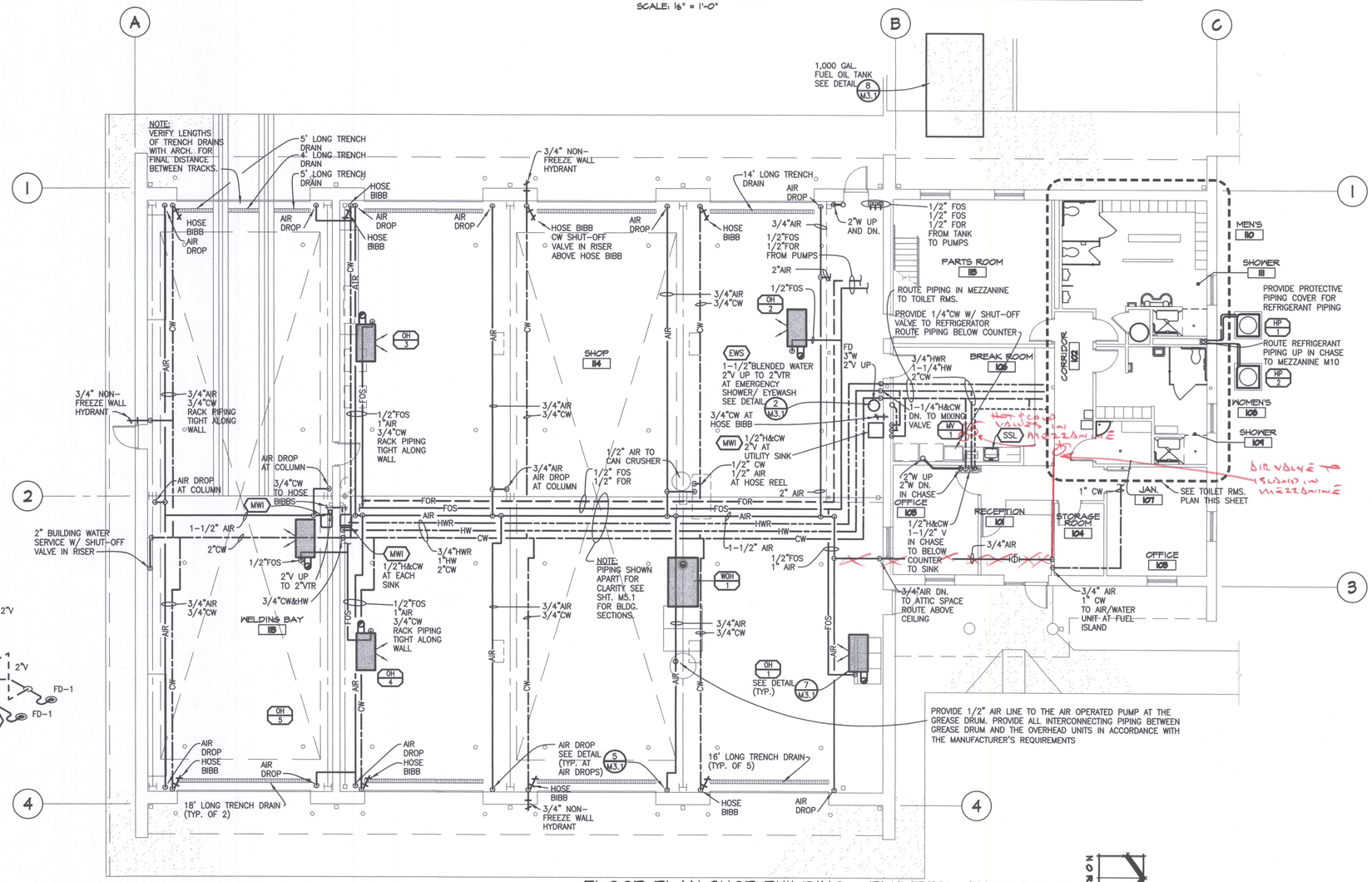

FLOOR PLAN SHOP BUILDING - PLUMBING AND PIPING

SCALE: 1/8" = 1'-0"

No.	DATE	BY
4		
3		
2		
1		

CONSULTANT:

L&S Engineering
The Commission Building, Washington Trust Bank
Suite 216, Spokane, Washington 99201
509 747-2279 Fax 509 747-2616 lsengineering@

ZB[a]
ZEECK BUTLER ARCHITECTS PS
The Pavilion Center 421 W Riverside Suite 220 Spokane WA 99201 t 509 . 456 . 8236 f 509 . 747 . 0570
e www.zeckbutler.com

SHEET TITLE: SHOP PLAN - PLUMBING & PIPING

PROJECT TITLE: GRANT COUNTY PUBLIC WORKS DEPARTMENT
ROAD DISTRICT NO. 3 SHOP FACILITY
QUINCY, WASHINGTON

SEAL: DAVID B. MOORE, STATE OF WASHINGTON, REGISTERED PROFESSIONAL ENGINEER, 20104
EXPIRES 3-29-05

DATE	7/12/04
DRAWN	DRD
CHECKED	DBM
PROJECT NUMBER	0415
DRAWING NO.	M2.3

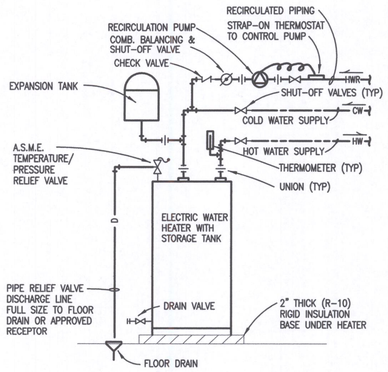

1 WATER HEATER DETAIL

NOT TO SCALE (ELECTRIC W/ RECIRCULATION) 400-01B.DWG

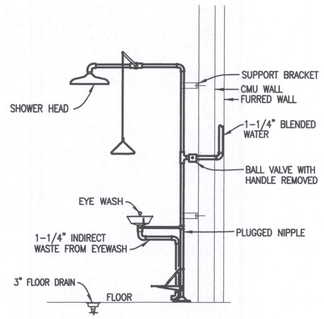

2 EMERGENCY STATION DETAIL

NOT TO SCALE 400-10A.DWG

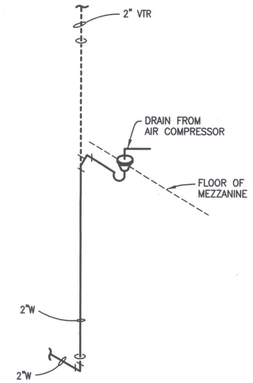

3 CONDENSATE DRAIN DETAIL

NOT TO SCALE 400-13B.DWG

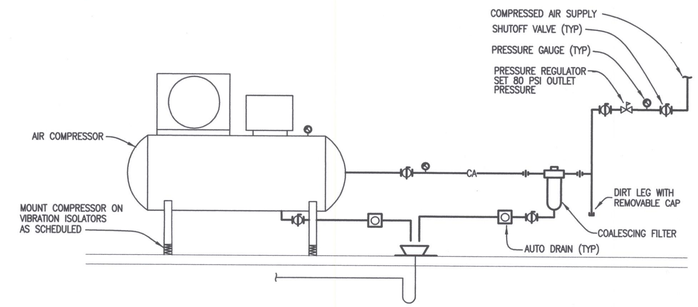

4 AIR COMPRESSOR PIPING DETAIL

NOT TO SCALE 400-21A.DWG

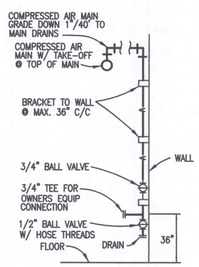

5 AIR DROP DETAIL

NOT TO SCALE

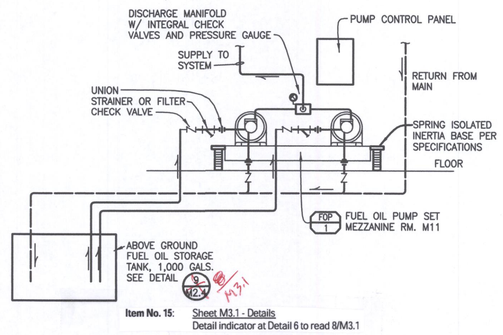

6 FUEL OIL PUMP PIPING DIAGRAM

NOT TO SCALE

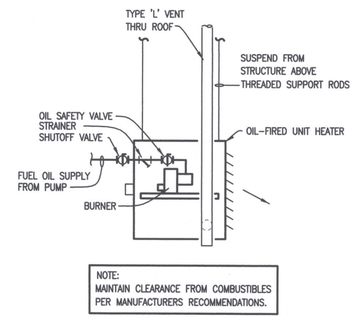

NOTE:
MAINTAIN CLEARANCE FROM COMBUSTIBLES PER MANUFACTURERS RECOMMENDATIONS.

7 OIL HEATER DETAIL

NOT TO SCALE 700-04B.DWG

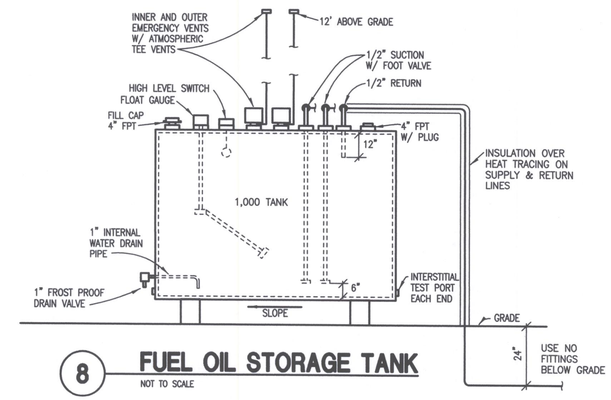

8 FUEL OIL STORAGE TANK

NOT TO SCALE

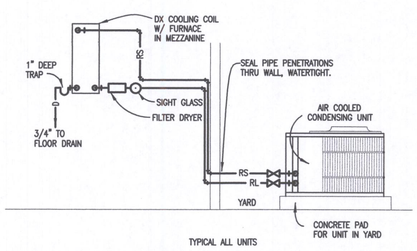

TYPICAL ALL UNITS

9 REFRIGERANT PIPING DIAGRAM

NOT TO SCALE 700-09C.DWG

No.	DATE	BY
4		
3		
2		
1		

CONSULTANT:

L&S Engineering
The Commission Building, West 26 Pacific Avenue, Suite 21, Spokane, Washington 99201
(509) 747-0379 Fax (509) 747-0388 lseng@lseng.com

ZECK BUTLER ARCHITECTS PS
The Poulsen Center 421 W Riverside Suite 220 Spokane WA 99201 t 509 . 456 . 8238 f 509 . 747 . 0570
e www.zeckbutler.com

SHEET TITLE: PLUMBING AND PIPING DETAILS

PROJECT TITLE: GRANT COUNTY PUBLIC WORKS DEPARTMENT
ROAD DISTRICT NO. 3 SHOP FACILITY
QUINCY, WASHINGTON

SEAL: DAVID B. MOORE, STATE OF WASHINGTON, 29104, REGISTERED PROFESSIONAL ENGINEER
EXPIRES 3-29-05

DATE	7/12/04
DRAWN	DRD
CHECKED	DBM
PROJECT NUMBER	0415
DRAWING NO.	M3.1

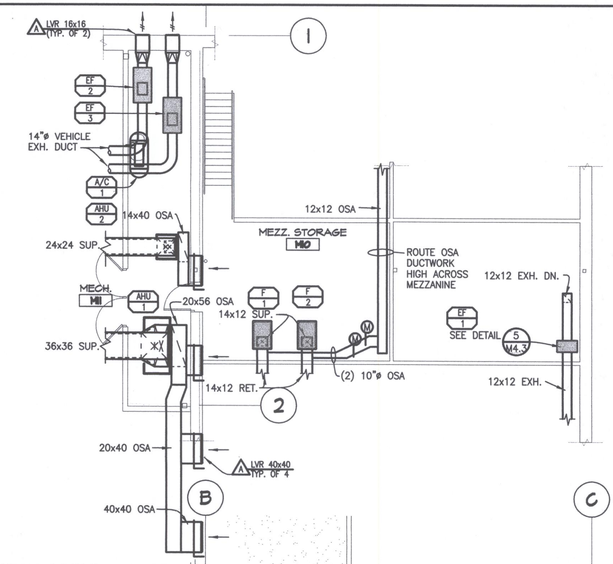

MEZZANINE PLAN-SHOP BUILDING - HVAC

SCALE: 1/8" = 1'-0"

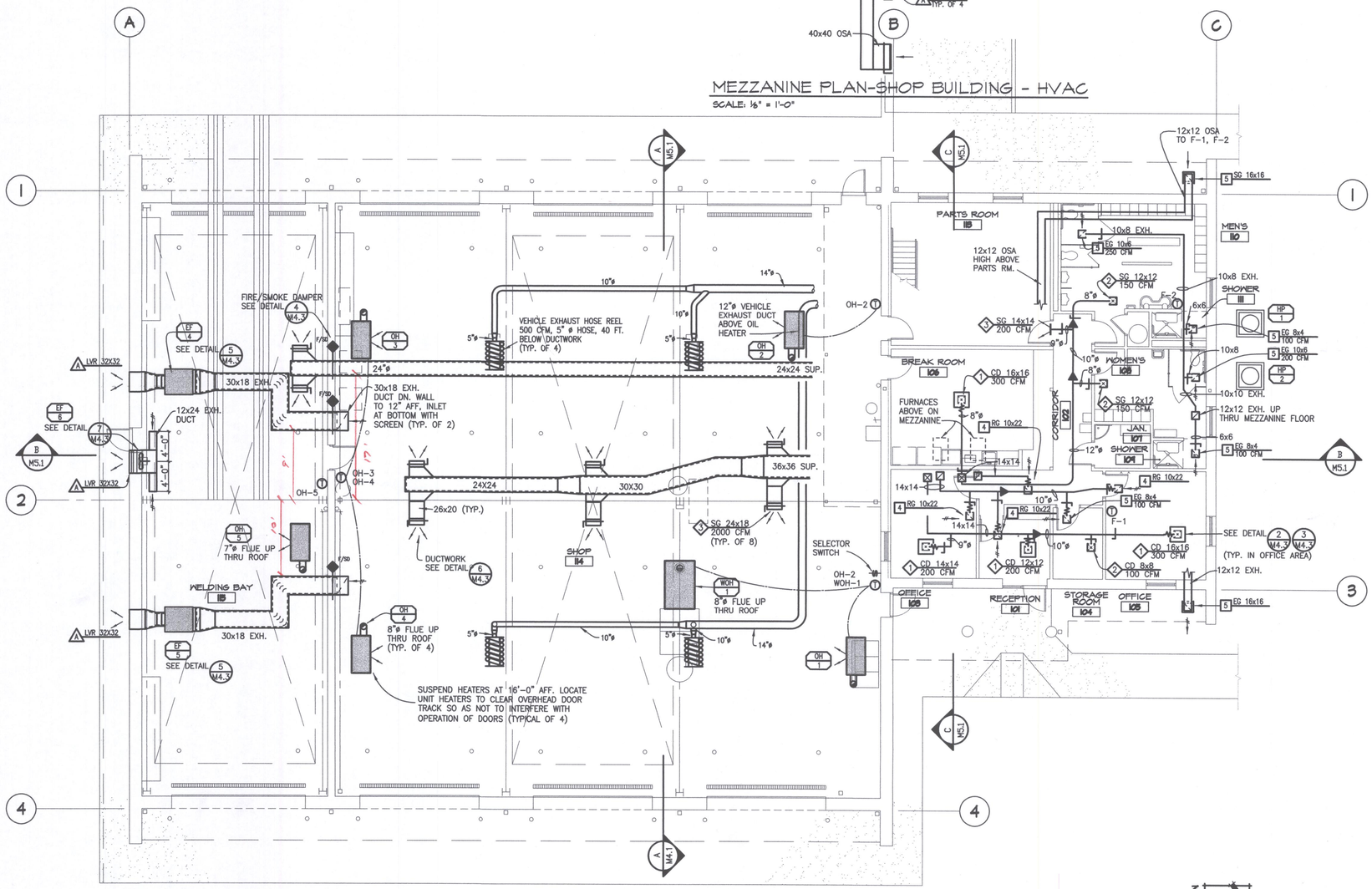

FLOOR PLAN SHOP BUILDING - HVAC

SCALE: 1/8" = 1'-0"

NORTH

No.	DATE	BY
4		
3		
2		
1		

CONSULTANT:

L&S Engineering
High Performance Design
The Commission Building, West 216 Pacific Avenue, Suite 211, Spokane, Washington 99201
(509) 747-2979 Fax (509) 747-2986 leng @ leng.com

ZECK BUTLER ARCHITECTS PS

ZB[a]

The Paulsen Center 421 W Riverside Suite 220 Spokane WA 99201 t 509 . 456 . 8236 f 509 . 747 . 0570
e www.zeckbutler.com

SHEET TITLE: SHOP PLAN - HVAC

PROJECT TITLE: GRANT COUNTY PUBLIC WORKS DEPARTMENT
ROAD DISTRICT NO. 3 SHOP FACILITY
QUINCY, WASHINGTON

SEAL

DAVID B. MOORE
STATE OF WASHINGTON
29104
REGISTERED PROFESSIONAL ENGINEER
EXPIRES 3-29-05

DATE	7/12/04
DRAWN	DRD
CHECKED	DBM
PROJECT NUMBER	0415
DRAWING NO.	M4.1

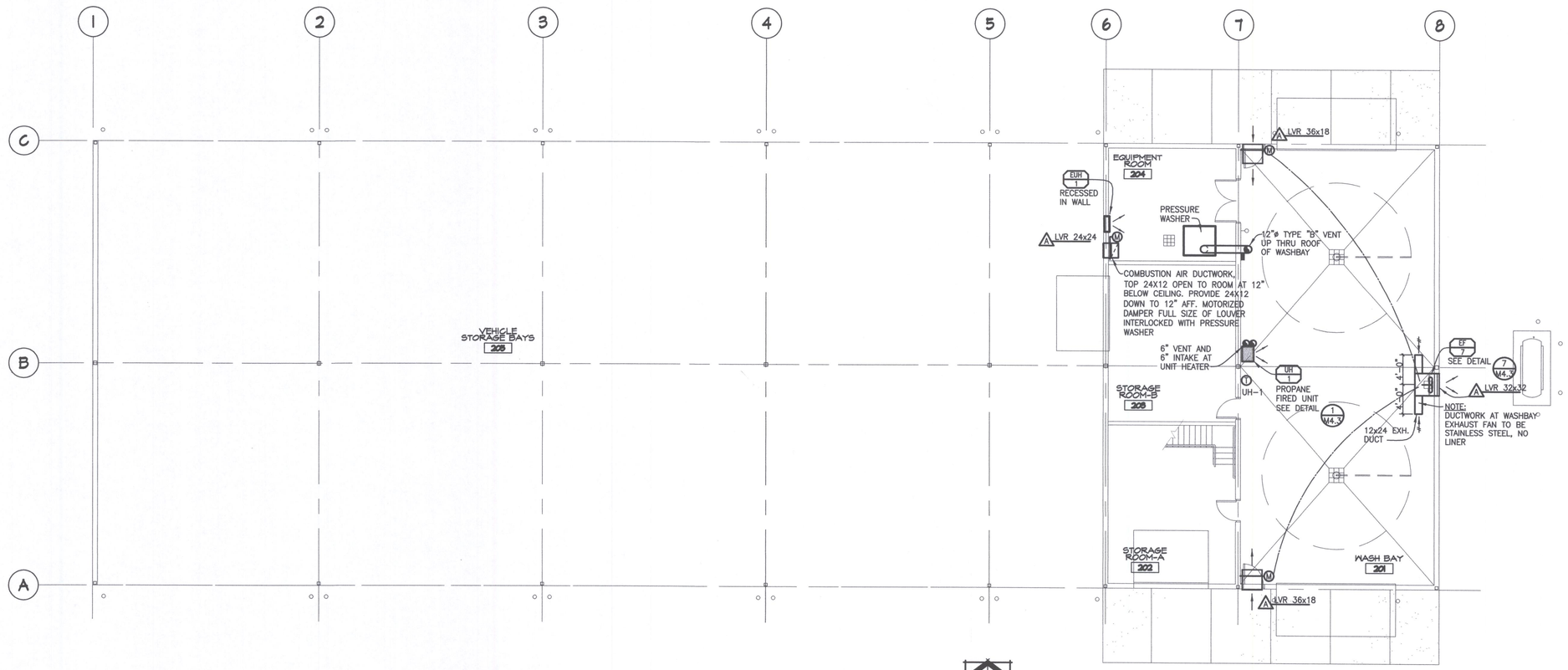

FLOOR PLAN - VEHICLE STORAGE BUILDING - HVAC

SCALE: 1/8" = 1'-0"

NORTH

No.	DATE	BY
4		
3		
2		
1		

CONSULTANT:

L&S Engineering
High Performance Design
The Commission Building, West 26 Pacific Avenue,
Post Office Box 1300, Wenatchee, Washington 98807-1300
(509) 747-0779 Fax: (509) 747-0788 lsengr@lsengcom

ZECK BUTLER ARCHITECTS PS

Z|B|a

The Pavilion Center 421 W Riverside Suite 220 Spokane WA 99201 t 509 . 456 . 8236 f 509 . 747 . 0570
e www.zeckbutler.com

SHEET TITLE
WASHBAY PLAN - HVAC

PROJECT TITLE
GRANT COUNTY
PUBLIC WORKS DEPARTMENT
ROAD DISTRICT NO. 8 SHOP FACILITY
QUINCY, WASHINGTON

SEAL
DAVID B. MOORE
STATE OF WASHINGTON
29104
REGISTERED PROFESSIONAL ENGINEER
EXPIRES 3-29-05

DATE	7/12/04
DRAWN	DRD
CHECKED	DBM
PROJECT NUMBER	0415
DRAWING NO.	M4.2

NOTES:
1. SEAL ALL JOINTS WITH HIGH TEMPERATURE SILICONE RUBBER SEALANT.
2. INSTALLATION SHALL BE PER MANUFACTURER'S INSTRUCTIONS.

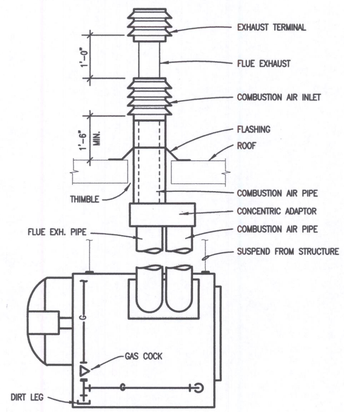

1 GAS FIRED UNIT HEATER

NOT TO SCALE UH-1 WASHBAY 700-04A.DWG

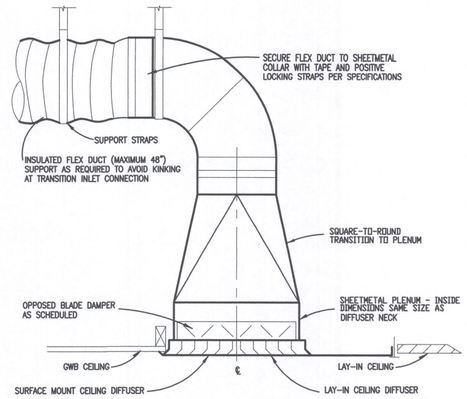

2 CEILING DIFFUSER DETAIL

NOT TO SCALE 800-04B.DWG

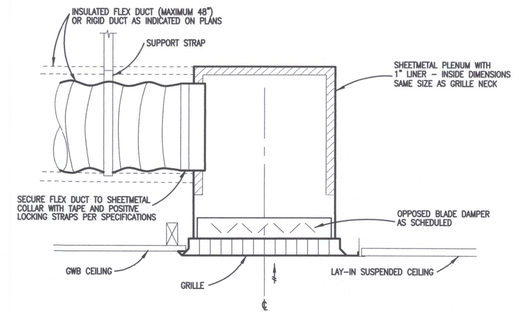

3 RETURN GRILLE DETAIL

NOT TO SCALE 800-06D.DWG

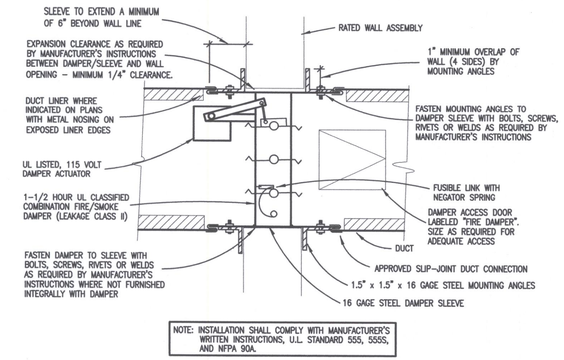

NOTE: INSTALLATION SHALL COMPLY WITH MANUFACTURER'S WRITTEN INSTRUCTIONS, U.L. STANDARD 555, 555S, AND NFPA 90A.

4 FIRE/SMOKE DAMPER DETAIL

NOT TO SCALE 800-07C.DWG

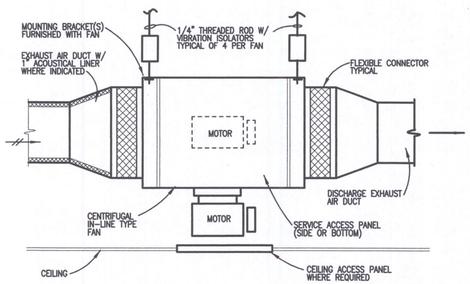

5 INLINE EXHAUST FAN DETAIL

NOT TO SCALE 800-09A.DWG

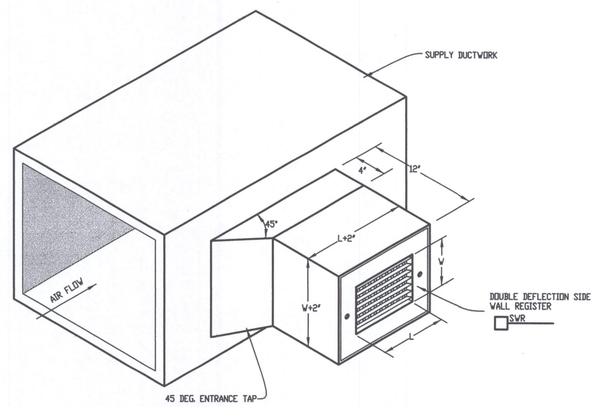

6 SIDE WALL REGISTER DETAIL

NOT TO SCALE 800-05A.DWG

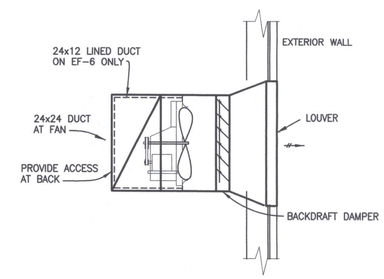

7 SHOP RELIEF/EXHAUST ASSEMBLY DETAIL

NOT TO SCALE 800-23C.DWG

No.	DATE	BY
4		
3		
2		
1		

CONSULTANT:

L&S Engineering
High Performance Design
The Commission Building, West 250 Pacific Avenue, Spokane, Washington 99201
(509) 747-4079 Fax (509) 747-0818 lseng@lsengcom

ZECK BUTLER ARCHITECTS PS

Z|B|a

The Problem Center 421 W Riverside Suite 220 Spokane WA 99201 t 509 . 456 . 8236 f 509 . 747 . 0570
e www.zeckbutler.com

SHEET TITLE: HVAC DETAILS

PROJECT TITLE: GRANT COUNTY PUBLIC WORKS DEPARTMENT
ROAD DISTRICT NO.3 SHOP FACILITY
QUINCY, WASHINGTON

SEAL: DAVID B. MOORE STATE OF WASHINGTON 29104 REGISTERED PROFESSIONAL ENGINEER
EXPIRES 3-29-05

DATE	7/12/04
DRAWN	DRD
CHECKED	DBM
PROJECT NUMBER	0415
DRAWING NO.	M4.3

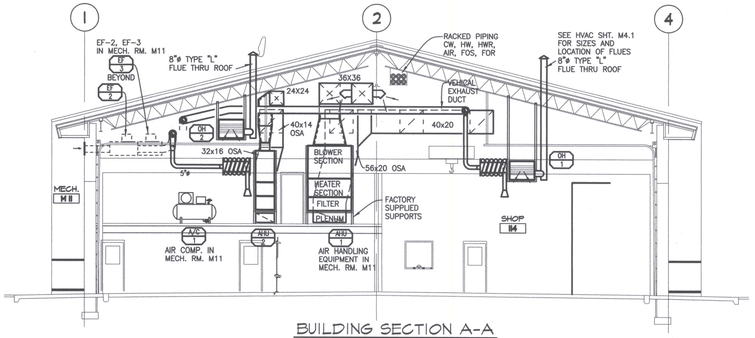

BUILDING SECTION A-A

SCALE: 1/8" = 1'-0"

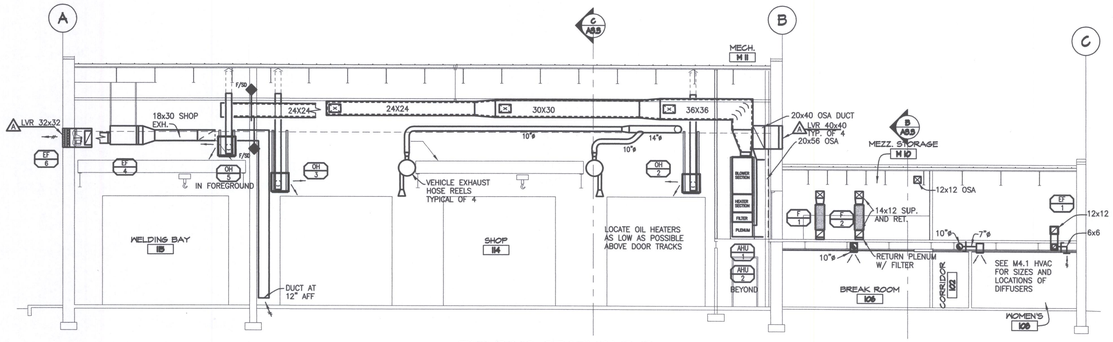

BUILDING SECTION B-B

SCALE: 1/8" = 1'-0"

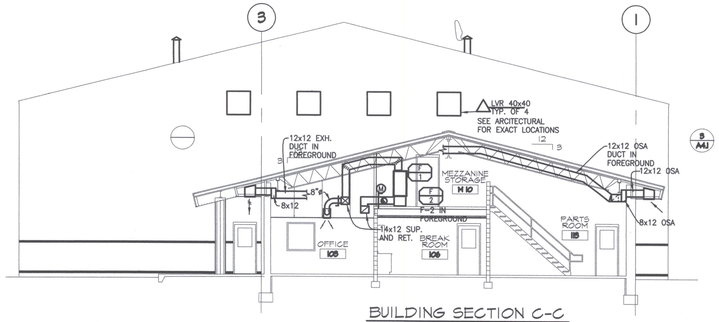

BUILDING SECTION C-C

SCALE: 1/8" = 1'-0"

No.	DATE	BY
4		
3		
2		
1		

CONSULTANT:

L&S Engineering
High Performance Design
The Commission Building, West 206 Pacific Avenue,
Spokane, Washington 99201-0904
(509) 747-0570 Fax (509) 747-2595 lsengr@lsengr.com

ARCHITECT:

ZECK BUTLER ARCHITECTS PS
The Pavilion Center 421 W Riverside Suite 220 Spokane WA 99201 t 509 . 456 . 8226 f 509 . 747 . 0570
www.zeckbutler.com

SHEET TITLE: MECHANICAL BUILDING SECTIONS

PROJECT TITLE: GRANT COUNTY PUBLIC WORKS DEPARTMENT
ROAD DISTRICT NO. 3 SHOP FACILITY
QUINCY, WASHINGTON

SEAL: DAVID B. MOTTER, STATE OF WASHINGTON, 29154, REGISTERED PROFESSIONAL ENGINEER, EXPIRES 3-29-07

DATE	7/12/04
DRAWN	DRD
CHECKED	DBM
PROJECT NUMBER	0415
DRAWING NO.	M5.1

MECHANICAL EQUIPMENT SCHEDULE

ITEM	DESCRIPTION	LOCATION	VOLTS	PHASE	KVA	MIN. CKT AMPS	STARTER SIZE	DISC SW.	FUSE SIZE	FEEDER	KEYED NOTES
F-1	FAN COIL UNIT	SHOP (M10)	208	1	0.83	66	–	2P-100	NA	70	
STAGE 1 HEAT F-1	ELECTRIC HEAT	SHOP (M10)	208	1							
STAGE 2 HEAT F-1	ELECTRIC HEAT	SHOP (M10)	208	1							
F-2	FAN COIL UNIT	SHOP (M10)	208	1	11.03	66	–	2P-60	NA	70	
STAGE 1 HEAT F-2	ELECTRIC HEAT	SHOP (M10)	208	1							
STAGE 2 HEAT F-2	ELECTRIC HEAT	SHOP (M10)	208	1							
HP-1	HEAT PUMP	OUTSIDE	208	1	3.06	14.7	–	2P-30	20	20	
HP-2	HEAT PUMP	OUTSIDE	208	1	3.06	14.7	–	2P-30	20	20	
HWT-1	HOT WATER TANK	OFFICE	208	1	4.5	27	–	2P-30	NA	30	
AHU-1	AIR HANDLER	MEZZ.	480	3	177.6	267	–	BKR LOCK OUT		SEE ONE-LINE	3
AHU-2	AIR HANDLER	MEZZ.	480	3	58.6	88		BKR LOCK OUT		SEE ONE-LINE	3
OH-1	OIL HEATER	SHOP	115	1	1.2	10	–	MOTOR SWITCH		20*	
OH-2	OIL HEATER	SHOP	115	1	1.2	10	–	MOTOR SWITCH		20*	
OH-3	OIL HEATER	SHOP	115	1	1.2	10	–	MOTOR SWITCH		20*	
OH-4	OIL HEATER	SHOP	115	1	1.2	10	–	MOTOR SWITCH		20*	
OH-5	OIL HEATER	WELDING	115	1	1.2	10	–	MOTOR SWITCH		20*	
A/C-1	AIR COMPRESSOR	SHOP	480	3	11.1	16.7		BKR LOCK OUT		20*	
A/C-2	AIR COMPRESSOR	WASH BAY	208	3	2.7	9.4		3P-30	15A	20	
UH-1	GAS UNIT HEATER	WASH BAY	115	1	1.6	13.33	–	2P-30	20A	20	
PW-1	PRESSURE WASHER	WASH BAY	460	3	16.7	26.2	–	3P-30	NA	30	
EF-1	TOILET EXHAUST	OFFICE	115	1	0.33	2.75	–			20*	
EF-2	TRUCK EXHAUST	SHOP	208	3	1.73	4.81	0	3P-30	6A	20	1,4
EF-3	TRUCK EXHAUST	SHOP	208	3	1.73	4.81	0	3P-30	6A	20	1,4
EF-4	GENERAL EXHAUST	SHOP	208	3	1.73	14.42	–	2P-30	20	20*	3
EF-5	GENERAL EXHAUST	SHOP	208	3	1.73	14.42	–	2P-30	20	20*	3
EF-6	GENERAL EXHAUST	WELDING	115	1	1.18	9.83	–	2P-30		20*	3
EF-7	GENERAL EXHAUST	WASH BAY	115	1	1.18	9.83	–	2P-30		20*	
WOH-1	WASTE OIL HEATER	SHOP	115	1	1.66	13.83	–	2P-30		30*	
EUH-1	ELECTRIC UNIT HEATER	WASH BAY	208	3	2	5.6	–			20	
OP-1	OIL PUMP	MEZZ.	120	1	0.5	20		2P-30	6A	30*	

KEYED NOTES:

1. CONTROLLED BY WALL SWITCH.
2. NOT USED.
3. CONTROLLED THROUGH HVAC CONTROL PANEL.
4. PROVIDE STARTER FOR UNIT.

GENERAL NOTES:

1. SEE ONE-LINE DIAGRAM SHEET FOR FEEDER SCHEDULE.

SYMBOLS LIST

ELECTRICAL

- LIGHTING SYMBOLS — FIXTURE SYMBOLS & CALLOUTS, REFER TO LIGHTING FIXTURE SCHEDULE
- EXIT LIGHT, " —► " DENOTES DIRECTIONAL ARROW
- BRANCH CIRCUIT PANEL
- HEAT CABLE JUNCTION BOX
- EXHAUST FAN
- JUNCTION BOX, WITH CONNECTION TO ADJACENT EQUIPMENT
- MOTOR CONNECTION, WIRING AND CONNECTIONS BY ELECTRICAL CONTRACTOR
- MOTOR DISCONNECT SWITCH BY ELECTRICAL CONTRACTOR
- MOTOR STARTER BY ELECTRICAL CONTRACTOR
- PLUGSTRIP WITH OUTLETS 18" O.C.
- PUSHBUTTON
- RECEPTACLE, DUPLEX – THE NUMERALS ADJACENT TO RECEPTACLE DENOTE CIRCUIT NUMBER
- RECEPTACLE, DUPLEX AT COUNTER LOCATION. MOUNT ABOVE COUNTER, COORDINATE WITH GENERAL CONTRACTOR & ARCHITECTURAL ELEVATIONS.
- RECEPTACLE, DUPLEX GROUND FAULT CIRCUIT INTERRUPTER (G.F.C.I.)
- RECEPTACLE, DUPLEX WITH IN SERVICE WEATHERPROOF COVER AND GROUND FAULT RECEPTACLE
- RECEPTACLE, 4-PLEX. SAME INSTRUCTIONS & VARIATIONS AS DUPLEX RECEPTACLES ABOVE
- RECEPTACLE, 3 PHASE SPECIAL, NUMERAL DENOTES AMPACITY
- 4 SQUARE BOX, SINGLE GANG MUD RING WITH CONDUIT STUB ABOVE CEILING. FOR RADIO CONNECTION. LEAVE PULL STRING AND BLANK PLATE.

- SWITCH, SINGLE POLE
- SWITCH, DOUBLE POLE
- SWITCH, THREE WAY. PROVIDE FOUR WAY WHERE REQUIRED

REFERENCE SYMBOLS

- KEYED NOTE IDENTIFIER, SEE KEYED NOTES
- MECHANICAL EQUIPMENT IDENTIFIER, SEE MECHANICAL EQUIPMENT SCHEDULE

FIRE PROTECTION

- DUCT SMOKE DETECTOR
- MOTORIZED DAMPER
- F/SD — FIRE/SMOKE DAMPER CONNECTION
- FIRE ALARM MANUAL PULL STATION
- MAGNETIC DOOR HOLDER CONNECTION
- MINI HORN
- RATE OF RISE HEAT DETECTOR
- RELAY
- SMOKE DETECTOR

COMMUNICATIONS

- DATA OUTLET/ TELEPHONE DUPLEX JACK. SINGLE FACEPLATE WITH AN 8-POSITION AND A 6-POSITION JACK, CAT5.
- INTERCOM
- SPEAKER
- SPEAKER HORN
- TELEPHONE OUTLET

CONDUIT/CIRCUIT

- CIRCUIT HOMERUN
- CONDUIT CONCEALED IN THE GROUND/FLOOR
- CONCEALED CONDUIT. SHORT CROSSHATCHING DENOTES NUMBER OF PHASE CONDUCTORS, LONG CROSSHATCHING DENOTES NEUTRAL. ALL CIRCUITS ARE TO INCLUDE A GREEN INSULATED #12 GROUND WIRE. MINIMUM WIRE SIZE TO BE #12 AWG UNLESS OTHERWISE NOTED. NO CROSSHATCHING DENOTES 2#12, 1#12 GROUND
- A-1,2,3* — TYPICAL CIRCUIT HOMERUN IDENTIFIER. LETTERS BEFORE HYPHEN DENOTE BRANCH PANEL OR DISTRIBUTION PANEL SUPPLYING CIRCUIT. NUMBERS AFTER HYPHEN INDICATE POSITION OR BREAKER CONNECTION POINTS IN SERVING PANEL. AN * IN THE IDENTIFIER INDICATES THAT THIS CIRCUIT IS SHOWN IN MULTIPLE LOCATIONS ON THE DRAWING.

LIGHTING FIXTURE SCHEDULE

SYMBOL/TYPE	MFGR.	CATALOG NUMBER	DESCRIPTION	VOLTS	INPUT	LAMPS	OF	MOUNT	NOTES
A	COLUMBIA LITHONIA DAYBRITE	P424-332G-LD36-S-EB8277-GLR 2PM3-GB-332-18LD-277-GEB-GLR 2P3GS-332-36SL-277EB-GLR	2X4 3 LAMP PARABOLIC, LAY-IN GRID 3X6 CELL SEMI-SPECULAR LOUVER ELECTRONIC BALLAST, FUSING	277	87	F32/T8/835	3	RECESSED	
B	COLUMBIA LITHONIA DAYBRITE	4PS24-332G-FSA12.125-S-EB8277-GLR 2SPG-332-A12125-277-GEB-GLR 2DG332-FS21-277EB-GLR	2X4 3 LAMP TROFFER, LAY-IN GRID .125" THK. PRISMATIC ACRYLIC LENS ELECTRONIC BALLAST, FUSING	277	87	F32/T8/835	3	RECESSED	
C	COLUMBIA LITHONIA DAYBRITE	4PS24-232G-FSA12.125-S-EB8277-GLR 2SPG-232-A12125-277-GEB-GLR 2DG232-FS21-277EB-GLR	2X4 2 LAMP TROFFER, LAY-IN GRID .125" THK. PRISMATIC ACRYLIC LENS ELECTRONIC BALLAST, FUSING	277	58	F32/T8/835	2	RECESSED	
D	PRESCOLITE LITHONIA OMEGA	CFQ626EB-STF602-277 AFV26DTT-6AR-277GEB	6" 1 LAMP DOWNLIGHT, VERTICAL SPEC. CLR. REFLECTOR, SELF TRIM ELECTRONIC BALLAST	277	34	CFQ26W/GX24q/835	1	RECESSED	
D1	PRESCOLITE LITHONIA	CBX-TL32-277HPF LU6F-13DTT-277HPF-6LF2	6" 1 LAMP ROUND, WET LOCATION DIECAST TRIM, FLUSH LEXAN LENS HPF MAGNETIC BALLAST	277	17	CFQ13W/GX24q/835	1	RECESSED	
E	DUAL-LITE LITHONIA EMERGI-LITE	LXUGWE LQM-SW3G-120/277-EL ECLXN-4-G	STENCILED GREEN LED LETTERS WHT.HSG., SGL. OR DBL. FACE NiCad BATTERY PACK	277	4	INCLUDED		UNIVERSAL	
F	COLUMBIA LITHONIA DAYBRITE	WAL4-232-EB8277-GLR WP2-32-277-GLR CD232B-2-T8-1/2-EB-277	4' 2 LAMP OVER MIRROR, ONE PIECE ACRYLIC DIFFUSER ELECTRONIC BALLAST, FUSING	277	58	F32/T8/835	2	WALL	
G	COLUMBIA LITHONIA DAYBRITE	WC4-232-EB8277-GLR LB-232-277-GEB-GLR SWN-232-277EB-GLR	9"X4 2 LAMP WRAPAROUND ACRYLIC, INJECTION MOLDED ENDS ELECTRONIC BALLAST, FUSING	277	58	F32/T8/835	2	SURFACE	
H	COLUMBIA LITHONIA DAYBRITE	KL8-232-EB8277-(2) KHC TAF-232-277-GEB-GLR-(HC) T1F-232-PP-277EB-GLR-(2)FL-123	8' 2 LAMP REINFORCED INDUSTRIAL WHITE REFLECTOR., 15% UPLIGHT ELECTRONIC BALLAST, FUSING	277	114	F32/T8/835	4	SURFACE (CHAIN)	
J	PRESCOLITE LITHONIA	RHD601-100MHFE-STH602 AH100M-6AR-277	6" OPEN DOWNLIGHT, VERTICAL SPECULAR CLEAR REFLECTOR	277	129	STANDARD M100 METAL HALIDE	1	RECESSED	
K	GE LSI DAYBRITE	WM7M-17-M-4-H-DB EG2-175MH-PG-MT-BRZ WLP-175M-277	EXTERIOR DIECAST WALL PACK UV STABLE POLYCARBONATE LENS LOW GLARE, DARK BRONZE FINISH	277	295	STANDARD M250 METAL HALIDE	1	WALL SURFACE	
K1	MOLDCAST HYDREL	PCL-S-P-RJM-175MH-DBZ-FS1 HP4-A-175M-277-RSB-B2-SF	EXTERIOR DIECAST WALL PACK UV STABLE POLYCARBONATE LENS LOW GLARE, MATTE BLACK FINISH	277	295	STANDARD M250 METAL HALIDE	1	WALL RECESSED	
L	COLUMBIA	LUN8-232-EB8277-GLR	ENCLOSED FLUORESCENT FIXTURE WET LOCATION RATED	277	114	F32/T8/835	4	CEILING	
M	COLUMBIA	LUN4-232-EB8277-GLR	ENCLOSED FLUORESCENT FIXTURE WET LOCATION RATED	277	58	F32/T8/835	2	CEILING	
N	COLUMBIA LITHONIA DAYBRITE	CS4-132-EB8277-GLR C-132-277-GEB-GLR T132-277EB-GLR	4' 1 LAMP SURFACE STRIP OPEN, NO SHIELDING ELECTRONIC BALLAST, FUSING	277	31	F32/T8/835	1	WALL	
O	COLUMBIA LITHONIA DAYBRITE	CS2-117-EB8277-GLR C-117-277-GEB-GLR T117-277EB-GLR	2' 1 LAMP SURFACE STRIP OPEN, NO SHIELDING ELECTRONIC BALLAST, FUSING	277	24	F32/T8/835	1	WALL	
P	COLUMBIA LITHONIA DAYBRITE	4PS22-232U6G-FSA12.125-S-EB8277-GLR 2SPG-2U316-A12125-277-GEB-GLR 2DG-231U6-FS21-277-EB-GLR	2X2 U6" LAMP TROFFER, LAY-IN GRID .125" THK. PRISMATIC ACRYLIC LENS ELECTRONIC BALLAST, FUSING	277	58	F32/T8/835/U6	2	RECESSED	
R	WF HARRIS LITHONIA DAYBRITE	30-SCPBZ28PLCHPF277CW TWL28DTT277DMBLP1 WLS28CF27LP	COMPACT FLUORESCENT WITH 28 WATT LAMP, 20F STARTING, DARK BRONZE, MOUNT AT 9'	277	34	28W PL	1	WALL	
F1	SPAULDING	CEII-PM-M400-III-277-DBZ	400 WATT METAL HALIDE FIXTURE W/ TYPE III DISTRIBUTION ON 25' SQUARE STEEL POLE	277	495	STANDARD M400 / U METAL HALIDE	1	POLE	
F2	KIM	LTV32-WW-70MH277-HS10	GROUND MOUNTED SIGNAGE FIXTURE W/ HID LAMP AND GLARE SHEILD	277	95	70 MH	1	GROUND	
F3	NOT USED								
F4	HYDREL KIM	9710-175M-B-277-SP-12BNPT LTV10-SP-175MH277-TR10	GROUND MOUNTED FLAG POLE FIXTURE	277	215	STANDARD M400 / U METAL HALIDE	1	GROUND	

GENERAL NOTES:

1. PROVIDE ALL REQUIRED CHAIN AND BRACKETS FOR FIXTURE HANGING. THE FIXTURE SCHEDULE DOES NOT LIST ALL MOUNTING AND SUSPENSION DEVICES FOR LIGHT FIXTURE. PROVIDE ALL CHAIN, AND HARDWARE AS REQUIRED.

No.	DATE	BY
4		
3		
2		
1		

CONSULTANTS:
SUMMIT PROFESSIONAL ENGINEERING, LLC
22 W. INDIANA AVE, SUITE E
SPOKANE, WA 99205
PHONE: (509)323-1563
FAX: (509)323-1565

ZECK BUTLER ARCHITECTS PS
The Paulsen Center 421 W Riverside Suite 220 Spokane WA 99201 t 509 . 456 . 8236 f 509 . 747 . 0570
e www.zeckbutler.com

SHEET TITLE: SYMBOLS LIST, SCHEDULES

PROJECT TITLE: QUINCY SHOP
GRANT COUNTY PUBLIC WORKS
EPHRATA, WASHINGTON

SEAL: DONALD RAY NIELSEN, STATE OF WASHINGTON, 35314, REGISTERED PROFESSIONAL ENGINEER
EXPIRES 09/16/05

DATE: 09/02/04
DRAWN: DMK
CHECKED: DRN
PROJECT NUMBER: 0415
DRAWING NO.: E0.1

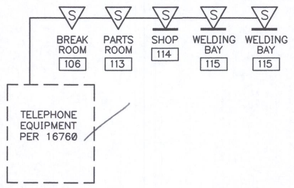

PAGING SYSTEM RISER DIAGRAM

NOT TO SCALE

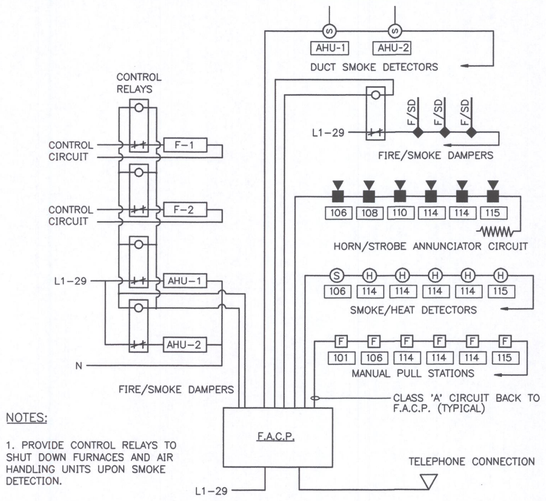

NOTES:

1. PROVIDE CONTROL RELAYS TO SHUT DOWN FURNACES AND AIR HANDLING UNITS UPON SMOKE DETECTION.

FIRE ALARM SYSTEM RISER DIAGRAM

NOT TO SCALE

Item No 16: Sheet E0.2: The feeder for panel VH1 shall be connected to panel MDP in the shop building. The contractor shall provide a 3P-200 amp breaker for the feeder to panel VH1. The feeder tag on this feeder should say 200N. The note next to the feeder should say "NO GROUND CONDUCTOR" not "NO NEUTRAL CONDUCTOR".

Item No 17: Sheet E0.2: The note next to the main service feeder should say "NO GROUND CONDUCTOR" not "NO NEUTRAL CONDUCTOR".

Item No 18: Sheet E0.2: The feeder callout for the 800 amp feeder in the schedule should state (3) 4" conduits.

Item No 19: Sheet E0.2: The ground conductor for panel MDP shall be #2/0 CU.

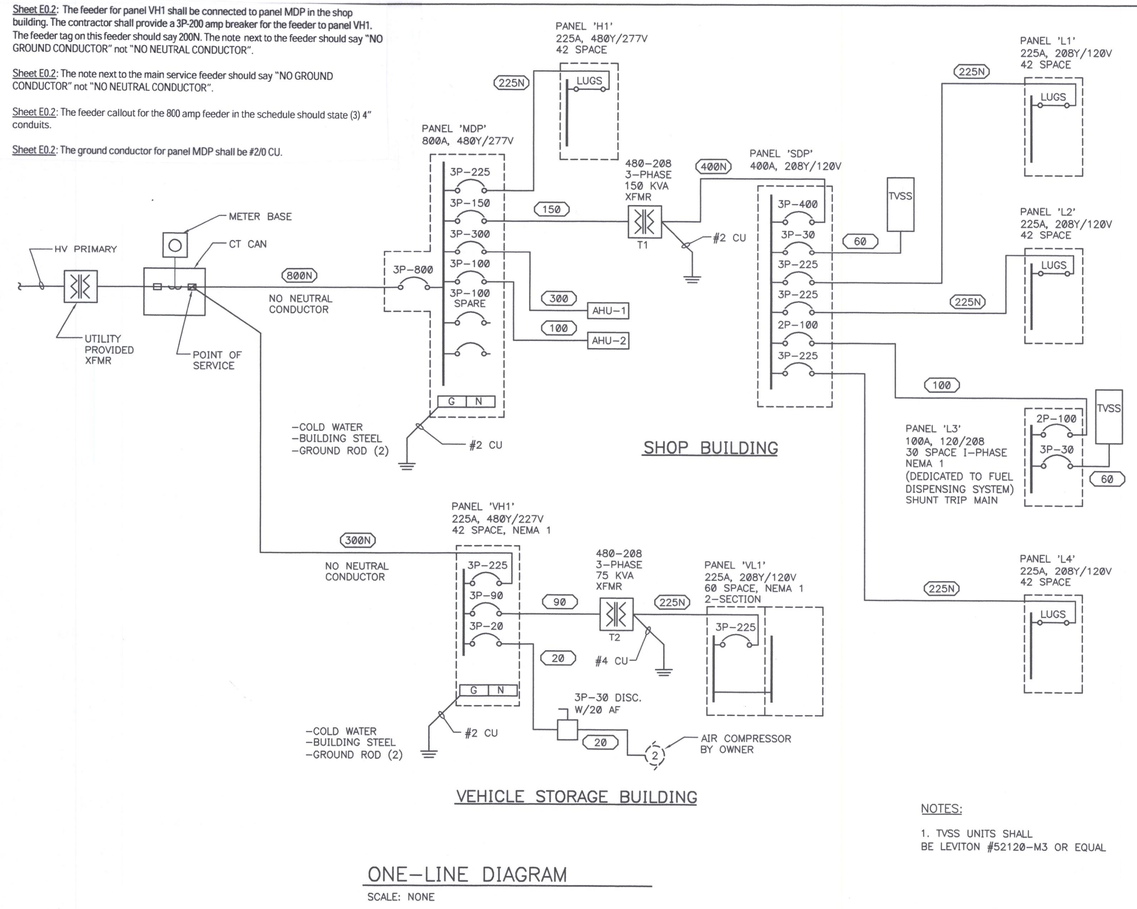

NOTES:

1. TVSS UNITS SHALL BE LEVITON #52120-M3 OR EQUAL

ONE-LINE DIAGRAM

SCALE: NONE

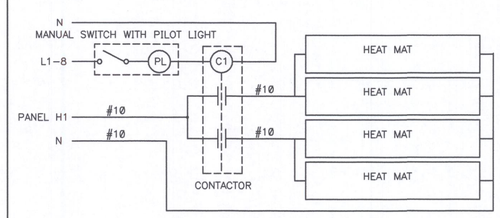

NOTES:

1. MANUAL SWITCH IS SINGLE POLE IN STANDARD DEVICE BOX, PILOT LIGHT IS SQUARE D #JP3BLRR29 OR EQUAL. PILOT LIGHT TO BE ON WHEN HEAT MATS ARE ENERGIZED.

2. CONTACTORS SHALL BE SQUARE D CLASS 8502 OR EQUAL WITH 4-NORMALLY OPEN CONTACTS, 20 AMP/277 VOLT RATED. THE CONTROL COIL SHALL BE 120 VAC RATED. THE CONTACTOR SHALL BE MOUNTED IN A NEMA 1 BOX MOUNTED FLUSH IN THE WALL AT THE LOCATION INDICATED ON THE DRAWINGS.

Item No 26: Sheet E0.2: The j-boxes called out in the heat mat connection diagram to be flush mounted may be surface mounted. All exposed conduit in shop and welding bay from the floor surface to +24" must be continuous galvanized rigid steel.

HEAT MAT CONTROL DIAGRAM

SCALE: NONE

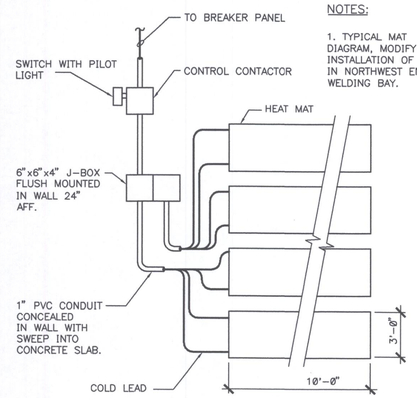

NOTES:

1. TYPICAL MAT DIAGRAM, MODIFY FOR INSTALLATION OF MATS IN NORTHWEST END OF WELDING BAY.

HEAT CABLE CONNECTION DIAGRAM

SCALE: NONE

FEEDER SCHEDULE

AMPACITY (AMPS)	FEEDER ID	3-PHASE WITH NEUTRAL	CONDUIT SIZE	FEEDER ID	3-PHASE, NO NEUTRAL	CONDUIT SIZE
20	20N	(4) #12, (1) #12 GND	3/4"	20	(3) #12, (1) #12 GND	3/4"
30	30N	(4) #10, (1) #10 GND	3/4"	30	(3) #10, (1) #10 GND	3/4"
40	40N	(4) #8, (1) #10 GND	1"	40	(3) #8, (1) #10 GND	1"
50	50N	(4) #6, (1) #10 GND	1"	50	(3) #6, (1) #10 GND	1"
60	60N	(4) #6, (1) #10 GND	1"	60	(3) #6, (1) #10 GND	1"
70	70N	(4) #4, (1) #8 GND	1 1/2"	70	(3) #4, (1) #8 GND	1 1/2"
80	80N	(4) #3, (1) #8 GND	1 1/2"	80	(3) #3, (1) #8 GND	1 1/2"
90	90N	(4) #2, (1) #8 GND	1 1/2"	90	(3) #2, (1) #8 GND	1 1/2"
100	100N	(4) #1, (1) #8 GND	1 1/2"	100	(3) #1, (1) #8 GND	1 1/2"
125	125N	(4) #1, (1) #6 GND	1 1/2"	125	(3) #1, (1) #6 GND	1 1/2"
150	150N	(4) #1/0, (1) #6 GND	1 1/2"	150	(3) #1/0, (1) #6 GND	1 1/2"
175	175N	(4) #2/0, (1) #6 GND	2"	175	(3) #2/0, (1) #6 GND	1 1/2"
200	200N	(4) #3/0, (1) #6 GND	2"	200	(3) #3/0, (1) #6 GND	2"
225	225N	(4) #4/0, (1) #4 GND	2 1/2"	225	(3) #4/0, (1) #4 GND	2"
250	250N	(4) 250kcmil, (1) #4 GND	2 1/2"	250	(3) 250kcmil, (1) #4 GND	2 1/2"
300	300N	(4) 350kcmil, (1) #4 GND	3"	300	(3) 350kcmil, (1) #4 GND	2 1/2"
350	350N	(4) 500kcmil, (1)#2 GND	3 1/2"	350	(3) 500kcmil, (1)#2 GND	3 1/2"
400	400N	(4) 600kcmil, (1) #2 GND	4"	400	(3) 600kcmil, (1) #2 GND	4"
500	500N	2-SETS OF (4) 250kcmil, (1) #2 GND	(2) 2 1/2"	500	2-SETS OF (3) 250kcmil, (1) #2 GND	(2) 2 1/2"
600	600N	2-SETS OF (4) 350kcmil, (1) #1 GND	(2) 3"	600	2-SETS OF (3) 350kcmil, (1) #1 GND	(2) 2 1/2"
800	800N	3-SETS OF (4) 400kcmil, (1) #2/0 GND	(2) 4"	800	3-SETS OF (3) 400kcmil, (1) #2/0 GND	(2) 4"
1000	1000N	3-SETS OF (4) 400kcmil, (1) #2/0 GND	(3) 3"	1000	3-SETS OF (3) 400kcmil, (1) #2/0 GND	(3) 3"
1200	1200N	4-SETS OF (4) 350kcmil, (1) #3/0 GND	(4) 3"	1200	4-SETS OF (3) 350kcmil, (1) #3/0 GND	(4) 2 1/2"
1600	1600N	4-SETS OF (4) 600kcmil, (1) #4/0 GND	(4) 4"	1600	4-SETS OF (3) 600kcmil, (1) #4/0 GND	(4) 3 1/2"
2000	2000N	5-SETS OF (4) 600kcmil, (1) 250kcmil GND	(5) 4"	2000	5-SETS OF (3) 600kcmil, (1) 250kcmil GND	(5) 3 1/2"
2500	2500N	6-SETS OF (4) 600kcmil, (1) 350kcmil GND	(6) 4"	2500	6-SETS OF (3) 600kcmil, (1) 350kcmil GND	(6) 3 1/2"
3000	3000N	8-SETS OF (4) 350kcmil, (1) 400kcmil GND	(8) 3"	3000	8-SETS OF (3) 350kcmil, (1) 400kcmil GND	(8) 3"

NOTES:

1. AN * WITH AND ID # INDICATES A SINGLE PHASE CIRCUIT WITH (2) CIRCUIT CONDUCTORS AND A GROUND. USE SCHEDULE PIPE SIZE.
2. THE ABOVE 2 STRING CABLE VERSION IN 1 SCHEDULED CONDUIT FOR CONDUCTORS.

No.	DATE	BY
4		
3		
2		
1		

CONSULTANTS:
SUMMIT PROFESSIONAL ENGINEERING, LLC
22 W. INDIANA AVE, SUITE E
SPOKANE, WA 99205
PHONE: (509)323-1563
FAX: (509)323-1565

ZECK BUTLER ARCHITECTS PS
The Pavilion Center 421 W Riverside Suite 220 Spokane WA 99201 t 509 . 458 . 8236 f 509 . 747 . 0570
e www.zeckbutler.com

SHEET TITLE: ONE-LINE DIAGRAM, CONTROL DIAGRAMS, DETAILS

PROJECT TITLE: QUINCY SHOP
GRANT COUNTY PUBLIC WORKS
EPHRATA, WASHINGTON

SEAL: DONALD RAY NIELSEN, STATE OF WASHINGTON, 36314, REGISTERED PROFESSIONAL ENGINEER, EXPIRES 09/16/05

DATE	04/02/04
DRAWN	DMK
CHECKED	DRN
PROJECT NUMBER	0415
DRAWING NO.	E0.2

ATTACHMENT NO. 2

PROJECT: QUINCY SHOP

PANEL: MDP — AMPS: 800 — VOLTS: 480Y/277 V
LOCATION: MECH. M11 — MAIN: 3P-800 — PHASE: 3-PHASE
SECTION 1 — MOUNT: SURFACE — SKIRT: FLOOR
AIC: 65,000

PANEL	AMPS	VOLTS	PHASE	FEEDER BREAKER	LIGHTS	RECEPT.	MECH.	L. MOTOR	HEAT	KITCHEN	OTHER
H1	225	480Y/277 V	3-PHASE	3P-225	13.426		29.916	14.958	46.368		19.418
TRANS. T1				3P-150	2.4	32.5	42.95	4.5	24.36		37.9
AHU-1				3P-300 *			6.05		180		
AHU-2				3P-100 *			2.07		56		
VH1	200	480Y/277 V	3-PHASE	3P-200	4.973						33.942
				* - DENOTES A LOCKOUT DEVICE							
				CONNECTED LOAD	20.799	32.5	80.986	14.958	306.728		91.26
				DEMAND FACTOR	x 1.25	10 Kva	x 1.0	x 0.25	x 1.0	x k. factor	x 1.0
				DEMAND LOAD	25.99875	21.25	80.986	3.7395	306.728		91.26

Item No 20: Sheet E0.3: Replace the panel schedule for MDP with the included schedule. (Attachment No. 2)

TOTAL CONNECTED LOAD	547.2	kVA
TOTAL CONNECTED CURRENT	658.5	AMPS
TOTAL DEMAND LOAD	530.0	kVA
TOTAL DEMAND CURRENT	637.7	AMPS

PROJECT: QUINCY SHOP — AMPS: 225 — VOLTS: 208Y/120 V
PANEL: L1 — MAIN: LUGS — PHASE: 3-PHASE
LOCATION: MECH. M11 — MOUNT: SURFACE — SKIRT: NONE
SECTION 1 — AIC: 22,000 — FEEDER: (4)#4/0, #4 GND, 2-1/2" C

NO.	DESCRIPTION	CODE	LOAD (VA)	BREAKER P	BREAKER AMP	BREAKER P	BREAKER AMP	LOAD (VA)	CODE	DESCRIPTION	NO.
1	RECEPTACLES - 105	R	900	1	20						2
3	RECEPTACLES - 104,105,107	R	720	1	20	3	30			TVSS UNIT	4
5	RECEPTACLES - WATER COOLERS	R	1200	1	20						6
7	RECEPTACLES - 102,108,110	R	720	1	20	1	20	500		HEAT MAT CONTROL POWER	8
9	RECEPTACLES - 106-COUNTER	R	1000	1	20	1	20	500		SPRINKLER CONTROLLER	10
11	RECEPTACLES - 106-MICROWAVE	R	1200	1	20	1	20	540	R	RECEPTACLES - M10	12
13	RECEPTACLES - 106-VENDING,REFER	R	1200	1	20	1	20	360	R	RECEPTACLES - PHONE BOARD	14
15	RECEPTACLES - 106	R	360	1	20	1	20	360	R	RECEPTACLES - PHONE BOARD	16
17	RECEPTACLES - 113	R	900	1	20	1	20	360	R	RECEPTACLES - SHOP COLUMN	18
19	RECEPTACLES - 101,103	R	900	1	20	1	20	1188		MOTORIZED HOSE REELS	20
21	RECEPTACLES - 103	R	720	1	20	1	20	1188		MOTORIZED HOSE REELS	22
23	HVAC/LIGHTING CONTROL POWER		500	1	20	1	20*	1000		HEAT TRACE - FUEL LINE	24
25	EXHAUST FAN EF-1	M	323	1	20					SPACE	26
27	FRIDGE		500	1	20					SPACE	28
29	FIRE ALARM CONTROL PANEL/ FS DAMPERS		500	1	20					SPACE	30
31	RECEPTACLES - SHOP	R	540	1	20					SPACE	32
33	RECEPTACLES - SHOP	R	540	1	20					SPACE	34
35	RECEPTACLES - SHOP	R	540	1	20					SPACE	36
37	PLUGMOLD	R	900	1	20					SPACE	38
39	OVERHEAD LUBE RACK	R	360	1	20	1	20	500	O	LUBE RACK POWER	40
41	SPARE			1	20					SPACE	42
S1											S2

CODE DESIGNATIONS		CONNECTED LOAD		DEMAND LOAD	
(L) - LIGHTS, 1.25 x CONN. LOAD	L	0.00	kVA	0.00	kVA
(R) - RECEPTACLES, FIRST 10 KVA + .5x REMAINING	R	14.32	kVA	12.16	kVA
(M) - MECHANICAL, 1.0 x CONN. LOAD	M	0.32	kVA	0.40	kVA
(H) - HEAT, 1.0 x CONN. LOAD	H	0.00	kVA	0.00	kVA
(K) - KITCHEN, NEC FACTOR x CONN. LOAD	K	0.00	kVA	0.00	kVA
(O) - OTHER , 1.0 x CONN. LOAD	O	6.38	kVA	6.38	kVA
		21.02 TOTAL CONNECTED	kVA	18.94 TOTAL DEMAND	kVA
		LOAD AMPS		52.6 AMPS	

* - GFCI BREAKER

PHASE LOAD
PHASE A AMPS - 62.8
PHASE B AMPS - 56.2
PHASE C AMPS - 56.2

% CONNECTED LOAD PER PHASE
PHASE A LOAD - 100.0
PHASE B LOAD - 89.6
PHASE C LOAD - 89.5

PROJECT: QUINCY SHOP — AMPS: 225 — VOLTS: 480Y/277 V
PANEL: H1 — MAIN: LUGS — PHASE: 3-PHASE
LOCATION: MECH. M11 — MOUNT: SURFACE — SKIRT: NONE
SECTION 1 — AIC: 14,000

NO.	DESCRIPTION	CODE	LOAD (VA)	BREAKER P	BREAKER AMP	BREAKER P	BREAKER AMP	LOAD (VA)	CODE	DESCRIPTION	NO.
1	LIGHTS - OFFICE AREA	L	2844	1	20	1	20	2065	L	LIGHTS - EXTERIOR BUILDING MOUNTED	2
3	LIGHTS - SHOP	L	2052	1	20	1	20	2475	L	LIGHTS - LOT POLES	4
5	LIGHTS - SHOP	L	1938	1	20						6
7	LIGHTS - WELDING BAY	L	2052	1	20	3	30	14958	M	CENTER BAY CRANE	8
9	HEAT MATS	H	5983	1	30**						10
~~11~~	~~HEAT MATS~~	H	5983	1	30**						12
13	HEAT MATS	H	5983	1	30**	3	30	14958	M	WELDING BAY CRANE	14
~~15~~	~~HEAT MATS~~	H	5983	1	30**						16
17	HEAT MATS	H	5983	1	30**						18
~~19~~	~~HEAT MATS~~	H	5983	1	30**	3	20	11100		AIR COMPRESSOR A/C-1 *	20
21	HEAT MATS	H	5983	1	30**						22
23	HEAT MATS	H	4487	1	30**					~~SPACE~~ HEAT MAT CONTROLS	24
25	~~SPARE~~ HEAT MAT									SPACE	26
27	AIR HANDLING UNIT CONTROL POWER		8318	3	20					SPACE	28
29	~~SPARE~~ HEAT MAT									SPACE	30
31	SPARE			1	20					SPACE	32
33	~~SPARE~~ HEAT MAT			1	20					SPACE	34
35	SPARE			1	20					~~SPACE~~ HEAT MAT	36
37	SPACE									SPACE	38
39	SPACE									SPACE	40
41	SPACE									SPACE	42
S1											S2

CODE DESIGNATIONS		CONNECTED LOAD		DEMAND LOAD	
(L) - LIGHTS, 1.25 x CONN. LOAD	L	13.43	kVA	16.78	kVA
(R) - RECEPTACLES, FIRST 10 KVA + .5x REMAINING	R	0.00	kVA	0.00	kVA
(M) - MECHANICAL, 1.0 x CONN. LOAD	M	29.92	kVA	33.66	kVA
(H) - HEAT, 1.0 x CONN. LOAD	H	46.37	kVA	46.37	kVA
(K) - KITCHEN, NEC FACTOR x CONN. LOAD	K	0.00	kVA	0.00	kVA
(O) - OTHER , 1.0 x CONN. LOAD	O	19.42	kVA	19.42	kVA
		109.13 TOTAL CONNECTED	kVA	116.22 TOTAL DEMAND	kVA
		LOAD AMPS		139.9 AMPS	

* - PROVIDE BREAKER LOCK
** - GFCI BREAKER FOR HEAT MAT

PHASE LOAD
PHASE A AMPS - 127.7
PHASE B AMPS - 140.5
PHASE C AMPS - 125.8

% CONNECTED LOAD PER PHASE
PHASE A LOAD - 90.9
PHASE B LOAD - 100.0
PHASE C LOAD - 89.5

PROJECT: QUINCY SHOP — AMPS: 225 — VOLTS: 208Y/120 V
PANEL: L2 — MAIN: LUGS — PHASE: 3-PHASE
LOCATION: WELDING BAY 115 — MOUNT: SURFACE — SKIRT: NONE
SECTION 1 — AIC: 22,000

NO.	DESCRIPTION	CODE	LOAD (VA)	BREAKER P	BREAKER AMP	BREAKER P	BREAKER AMP	LOAD (VA)	CODE	DESCRIPTION	NO.
1	OH DOOR	M	1127	1	20						2
3	OH DOOR	M	1127	1	20	3	50	9720		WELDING RECEPTACLE	4
5	OH DOOR	M	1127	1	20						6
7	RECEPTACLES - PLUG STRIP	R	900	1	20						8
9	RECEPTACLES - PLUG STRIP	R	900	1	20	3	50	9720		WELDING RECEPTACLE	10
11	RECEPTACLES - WELDING, EXTERIOR	R	720	1	20						12
13	RECEPTACLES - PLUG STRIP	R	900	1	20	1	20			SPARE	14
15	RECEPTACLES - WELDING, EXTERIOR	R	900	1	20	1	20			SPARE	16
17	BRAKE LATHE	M	1127	1	20	1	20	667	M	EXHAUST FAN #6	18
19	PIN PRESS	M	1127	1	20	1	20			SPARE	20
21	DRILL PRESS	M	1127	1	20	1	20			SPARE	22
23	RECEPTACLE - 1-PH GENERAL PURP.	R	3600	2	30	1	20	1127	M	OIL HEATER OH-3	24
25						1	20	1127	M	OIL HEATER OH-5	26
27	RECEPTACLE - 1-PH GENERAL PURP.		3600	2	30	1	20	1127	M	OIL HEATER OH-4	28
29						1	20	1500	M	CHOP SAW	30
31	RECEPTACLE - 1-PH GENERAL PURP.		3600	2	30						32
33						3	20	1730	M	EXHAUST FAN #4	34
35	OVERHEAD DOOR	M	1127	1	20						36
37	OVERHEAD DOOR	M	1127	1	20						38
39	REC - SHOP 114	R	360	1	20	3	20	1730	M	EXHAUST FAN #5	40
41	SPARE			1	20						42
S1											S2

CODE DESIGNATIONS		CONNECTED LOAD		DEMAND LOAD	
(L) - LIGHTS, 1.25 x CONN. LOAD	L	0.00	kVA	0.00	kVA
(R) - RECEPTACLES, FIRST 10 KVA + .5x REMAINING	R	8.28	kVA	8.28	kVA
(M) - MECHANICAL, 1.0 x CONN. LOAD	M	18.02	kVA	18.46	kVA
(H) - HEAT, 1.0 x CONN. LOAD	H	0.00	kVA	0.00	kVA
(K) - KITCHEN, NEC FACTOR x CONN. LOAD	K	0.00	kVA	0.00	kVA
(O) - OTHER , 1.0 x CONN. LOAD	O	26.64	kVA	26.64	kVA
		52.94 TOTAL CONNECTED	kVA	53.38 TOTAL DEMAND	kVA
		LOAD AMPS		148.3 AMPS	

PHASE LOAD
PHASE A AMPS - 146.2
PHASE B AMPS - 139.8
PHASE C AMPS - 155.2

% CONNECTED LOAD PER PHASE
PHASE A LOAD - 94.2
PHASE B LOAD - 90.0
PHASE C LOAD - 100.0

PROJECT: QUINCY SHOP
PANEL: SDP — AMPS: 400 — VOLTS: 208Y/120 V
LOCATION: MECH. M11 — MAIN: 3P-400 — PHASE: 3-PHASE
SECTION 1 — MOUNT: SURFACE — SKIRT: FLOOR
AIC: 42,000 — FEEDER: (4)#600 kcmil- #2 GND, 4" C

PANEL	AMPS	VOLTS	PHASE	FEEDER BREAKER	LIGHTS	RECEPT.	MECH.	L. MOTOR	HEAT	KITCHEN	OTHER
TVSS UNIT				3P-30							
L1	225	208Y/120 V	3-PHASE	3P-225	0	14.32	0.323	0.323	0	0	6.376
L2	225	208Y/120 V	3-PHASE	3P-225	0	8.28	18.024	1.73	0	0	26.64
L3	100	120/208 V	1-PHASE	2P-100	2.4	0	3.99	1.581	8.172	0	2.6
L4	225	208Y/120 V	3-PHASE	3P-225	0	10.8	23.483	4.5	71.244	0	3.8
				CONNECTED LOAD	2.4	33.4	45.82	4.5	79.416	0	39.416
				DEMAND FACTOR	x 1.25	10 Kva	x 1.0	x 0.25	x 1.0	x k. factor	x 1.0
				DEMAND LOAD	3	21.7	45.82	1.125	79.416	0	39.416

TOTAL CONNECTED LOAD	205.0	kVA
TOTAL CONNECTED CURRENT	569.3	AMPS
TOTAL DEMAND LOAD	190.5	kVA
TOTAL DEMAND CURRENT	529.1	AMPS

PROJECT: QUINCY SHOP — AMPS: 100 — VOLTS: 120/208 V
PANEL: L3 — MAIN: 2P-100 AMP * — PHASE: 1-PHASE
LOCATION: MECH. M11 — MOUNT: SURFACE — SKIRT: NONE
SECTION 1 — AIC: 22,000

NO.	DESCRIPTION	CODE	LOAD (VA)	BREAKER P	BREAKER AMP	BREAKER P	BREAKER AMP	LOAD (VA)	CODE	DESCRIPTION	NO.
1	TURBIN PUMP #1	M	1581	2	15						2
3						3	30			TVSS UNIT	4
5	(PUMP #1 SHUNT)										6
7	TURBIN PUMP #2	M	1581	2	15						8
9						1	20	1200	L	DISPENSER #1	10
11	(PUMP #2 SHUNT)									(SHUNT FOR DISPENSER #1)	12
13						1	20	1200	L	DISPENSER #2	14
15	SPARE			1	20					(SHUNT FOR DISPENSER #2)	16
17	F-2: STAGE 2 HEAT	H	8172	2	20					SPACE	18
19										SPACE	20
21	FURNACE UNIT 2	M	828	2	20	1	20	1400		CARD READER SYSTEM	22
23										SPACE	24
25						1	20	1200		FUEL CONTROLLER EQUIPMENT	26
27	SPACE									SPACE	28
29	SPACE									SPACE	30

CODE DESIGNATIONS		CONNECTED LOAD		DEMAND LOAD	
(L) - LIGHTS, 1.25 x CONN. LOAD	L	2.40	kVA	3.00	kVA
(R) - RECEPTACLES, FIRST 10 KVA + .5x REMAINING	R	0.00	kVA	0.00	kVA
(M) - MECHANICAL, 1.0 x CONN. LOAD	M	3.99	kVA	4.39	kVA
(H) - HEAT, 1.0 x CONN. LOAD	H	8.17	kVA	8.17	kVA
(K) - KITCHEN, NEC FACTOR x CONN. LOAD	K	0.00	kVA	0.00	kVA
(O) - OTHER , 1.0 x CONN. LOAD	O	2.60	kVA	2.60	kVA
		17.16 TOTAL CONNECTED	kVA	18.16 TOTAL DEMAND	kVA
		LOAD AMPS		87.3 AMPS	

* - PROVIDE SHUNT TRIP MAIN BREAKER

PHASE LOAD
0
0

% CONNECTED LOAD PER PHASE
0
0

GENERAL NOTE:

1. PANEL 'L3' DEDICATED TO GAS EQUIPMENT POWER SERVICE. THE PANEL SCHEDULE SHOWS A GENERAL LAYOUT FOR A TYPICAL GAS SYSTEM. THE CONTRACTOR SHALL COORDINATE WITH THE GAS SYSTEM SUPPLIER FOR THE NUMBER AND TYPE OF BREAKERS REQUIRED FOR THE GAS EQUIPMENT. PROVIDE ALL SHUNT TRIP UNITS AND MAKE ALL PANEL CONNECTIONS REQUIRED. THE CONTRACTOR SHALL PROVIDE AND INSTALL ALL REQUIRED GAS SYSTEM SHUTOFF SWITCHES REQUIRED. EMERGENCY STOP SWITCHES SHALL BE LOCATED PER LOCAL, NEC, AND STATE CODES. PROVIDE POWER CIRCUITS AND CONNECTION TO ALL GAS CONTROL EQUIPMENT.

No.	DATE	BY
4		
3		
2		
1		

CONSULTANTS:
SUMMIT PROFESSIONAL ENGINEERING, LLC
22 W. INDIANA AVE. SUITE E
SPOKANE, WA 99205
PHONE: (509)323-1563
FAX: (509)323-1565

ZECK BUTLER ARCHITECTS PS
The Pavilions Center 421 W Riverside Suite 220 Spokane WA 99201 t 509 . 456 . 0238 f 509 . 747 . 0570
e www.zeckbutler.com

SHEET TITLE: PANEL SCHEDULES

PROJECT TITLE: QUINCY SHOP
GRANT COUNTY PUBLIC WORKS
EPHRATA, WASHINGTON

SEAL: DONALD RAY NIELSEN — STATE OF WASHINGTON — 35314 — REGISTERED PROFESSIONAL ENGINEER
EXPIRES 09/16/05

DATE	09/02/04
DRAWN	DMK
CHECKED	DRN
PROJECT NUMBER	0415
DRAWING NO.	E0.3

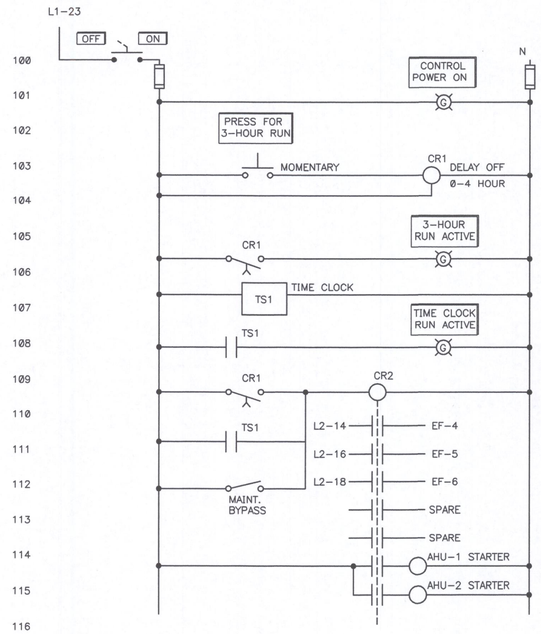

HVAC CONTROL

SCALE: NONE

NOTES:

1. THE CONTACTOR AND RELAYS ARE TO BE HOUSED IN A NEMA 1 ENCLOSURE LOCATED IN THE MECHANICAL MEZZANINE. ALL SWITCHES AND INDICATORS ARE TO BE HOUSED IN A HINGED COVER NEMA 1 ENCLOSURE AND ARE TO BE LOCATED IN THE BREAK ROOM AS INDICATED ON SHEET E1.3. THE LABELS ON THE PANEL SHALL BE LAMINATED PLASTIC, WHITE FACE WITH BLACK CORE. LETTERS SHALL BE 1/4" HIGH MINIMUM. PROVIDE LABELS IDENTIFYING EACH ENCLOSURE.

2. NOT SHOWN ARE NORMALLY CLOSED CONTROL RELAYS FOR FIRE SYSTEM SHUT DOWN OF AHU-1 AND AHU-2. COORDINATE CONTROL RELAY REQUIREMENTS WITH FIRE SYSTEM CONTROLLLER. MOUNT RELAYS IN NEMA 1 ENCLOSURES AND MOUNT NEAR HVAC UNITS.

3. TIME SWITCH TO BE INTERMATIC #ET173C. PROGRAM ON/OFF TIMES TO OWNER'S REQUIREMENTS. REQUEST RUN TIMES FROM ARCHITECT IN WRITING WHEN SYSTEM CONTROLS ARE INSTALLED.

PROJECT: QUINCY SHOP
PANEL: L4
LOCATION: MECH. M11
SECTION 1

AMPS: 225
MAIN: LUGS
MOUNT: SURFACE
AIC: 22,000

VOLTS: 208Y/120 V
PHASE: 3-PHASE
SKIRT: NONE

NO.	DESCRIPTION	CODE	LOAD (VA)	BREAKER P	BREAKER AMP		BREAKER P	BREAKER AMP	LOAD (VA)	CODE	DESCRIPTION	NO.
1	OVERHEAD DOOR	M	1127	1	20							2
3	OVERHEAD DOOR	M	1127	1	20		3	15	3226	M	EXHAUST FANS EF-2, EF-3	4
5	OVERHEAD DOOR	M	1127	1	20							6
7	WATER HEATER WH-1	M	4500	2	30		1	20	1127	M	OIL HEATER OH-1	8
9							1	20	1127	M	OIL HEATER OH-2	10
11	RECEPTACLE - 1-PH. GENERAL PURP.	R	3600	2	30		2	20	3000	L	ANTIFREEZE RECYCLER	12
13												14
15	RECEPTACLE - 1-PH. GENERAL PURP.	R	3600	2	30		1	20	300	M	OIL PUMP 0P-1	16
17												18
19	RECEPTACLE - 1-PH. GENERAL PURP.	R	3600	2	30		2	60	19368	H	F-1: STAGE 1 HEAT	20
21												22
23	FURNACE F-1	H	12168	2	60		2	25	8172	H	F-1: STAGE 2 HEAT	24
25												26
27	FURNACE F-2	H	12168	2	60		2	20	828	M	FURNACE UNIT 1	28
29												30
31	HEAT PUMP HP-1	M	3057	2	20		2	60	19368	H	F-2: STAGE 1 HEAT	32
33												34
35	HEAT PUMP HP-2	M	3057	2	20		1	20			SPARE	36
37							1	20			SPARE	38
39	WASTE OIL HEATER	M	2880	1	30		1	20			SPARE	40
41	~~SPARE~~ 3-WAY TRIP BREAKER / PNL3			1	20		1	20			SPARE	42
S1												S2

CODE DESIGNATIONS
(L) - LIGHTS, 1.25 x CONN. LOAD
(R) - RECEPTACLES, FIRST 10 KVA + .5x REMAINING
(M) - MECHANICAL, 1.0 x CONN. LOAD
(H) - HEAT, 1.0 x CONN. LOAD
(K) - KITCHEN, NEC FACTOR x CONN. LOAD
(O) - OTHER , 1.0 x CONN. LOAD

	CONNECTED LOAD		DEMAND LOAD	
L	0.00	kVA	0.00	kVA
R	10.80	kVA	10.40	kVA
M	23.48	kVA	24.61	kVA
H	71.24	kVA	71.24	kVA
K	0.00	kVA	0.00	kVA
O	3.80	kVA	3.80	kVA
	109.33 TOTAL CONNECTED	kVA	110.05 TOTAL DEMAND	kVA
	LOAD AMPS		305.7 AMPS	

PHASE LOAD
PHASE A AMPS - 364.0
PHASE B AMPS - 331.3
PHASE C AMPS - 215.8

% CONNECTED LOAD PER PHASE
PHASE A LOAD - 100.0
PHASE B LOAD - 91.0
PHASE C LOAD - 59.3

PROJECT: QUINCY SHOP
PANEL: VH1
LOCATION: STORAGE 303
SECTION 1

AMPS: 200
MAIN: 3P-225 AMP
MOUNT: SURFACE
AIC: 14,000

VOLTS: 480Y/277 V
PHASE: 3-PHASE
SKIRT: NONE

SERVICE ENTRANCE PANEL

NO.	DESCRIPTION	CODE	LOAD (VA)	BREAKER P	BREAKER AMP		BREAKER P	BREAKER AMP	LOAD (VA)	CODE	DESCRIPTION	NO.
1	LIGHTS - STORAGE, WASH BAY	L	1368	1	20							2
3	LIGHTS - VEHICLE STORAGE	L	1540	1	20		3	90	17210		FEED TO TRANSFORMER T2	4
5	LIGHTS - EXTERIOR	L	2065	1	20							6
7	SPARE			1	20		1	20			SPARE	8
9	SPARE			1	20		1	20			SPARE	10
11	SPARE			1	20		1	20			SPARE	12
13	SPARE			1	20							14
15	SPARE			1	20		3	30	16732		PRESSURE WASHER	16
17	SPARE			1	20							18
19	SPARE			1	20						SPACE	20
21	SPARE			1	20						SPACE	22
23	SPARE			1	20						SPACE	24
25	SPARE			1	20						SPACE	26
27	SPARE			1	20						SPACE	28
29	SPARE			1	20						SPACE	30
31	SPARE			1	20						SPACE	32
33	SPARE			1	20						SPACE	34
35	SPARE			1	20						SPACE	36
37	SPARE			1	20						SPACE	38
39	SPARE			1	20						SPACE	40
41	SPARE			1	20						SPACE	42
S1												S2

CODE DESIGNATIONS
(L) - LIGHTS, 1.25 x CONN. LOAD
(R) - RECEPTACLES, FIRST 10 KVA + .5x REMAINING
(M) - MECHANICAL, 1.0 x CONN. LOAD
(H) - HEAT, 1.0 x CONN. LOAD
(K) - KITCHEN, NEC FACTOR x CONN. LOAD
(O) - OTHER , 1.0 x CONN. LOAD

	CONNECTED LOAD		DEMAND LOAD	
L	4.97	kVA	6.22	kVA
R	0.00	kVA	0.00	kVA
M	0.00	kVA	0.00	kVA
H	0.00	kVA	0.00	kVA
K	0.00	kVA	0.00	kVA
O	33.94	kVA	33.94	kVA
	38.92 TOTAL CONNECTED	kVA	40.16 TOTAL DEMAND	kVA
	LOAD AMPS		48.3 AMPS	

PHASE LOAD
PHASE A AMPS - 45.8
PHASE B AMPS - 46.4
PHASE C AMPS - 48.3

% CONNECTED LOAD PER PHASE
PHASE A LOAD - 94.8
PHASE B LOAD - 96.1
PHASE C LOAD - 100.0

PROJECT: QUINCY SHOP
PANEL: VL2
LOCATION: STORAGE 303
SECTION 1

AMPS: 100
MAIN: LUGS
MOUNT: SURFACE
AIC: 10,000

VOLTS: 240/120 V
PHASE: 1-PHASE
SKIRT: NONE

NO.	DESCRIPTION	CODE	LOAD (VA)	BREAKER P	BREAKER AMP		BREAKER P	BREAKER AMP	LOAD (VA)	CODE	DESCRIPTION	NO.
1	SPARE			1	20		1	20			SPARE	2
3	SPARE			1	20		1	20			SPARE	4
5	SPARE			1	20		1	20			SPARE	6
7	SPARE			1	20		1	20			SPARE	8
9	SPARE			1	20		1	20			SPARE	10
11	SPACE										SPACE	12
13	SPACE										SPACE	14
15	SPACE										SPACE	16
17	SPACE										SPACE	18
19	SPACE										SPACE	20
21	SPACE										SPACE	22
23	SPACE										SPACE	24
25	SPACE										SPACE	26
27	SPACE										SPACE	28
29	SPACE										SPACE	30
S1												S2

CODE DESIGNATIONS
(L) - LIGHTS, 1.25 x CONN. LOAD
(R) - RECEPTACLES, FIRST 10 KVA + .5x REMAINING
(M) - MECHANICAL, 1.0 x CONN. LOAD
(H) - HEAT, 1.0 x CONN. LOAD
(K) - KITCHEN, NEC FACTOR x CONN. LOAD
(O) - OTHER , 1.0 x CONN. LOAD

	CONNECTED LOAD		DEMAND LOAD	
L	0.00	kVA	0.00	kVA
R	0.00	kVA	0.00	kVA
M	0.00	kVA	0.00	kVA
H	0.00	kVA	0.00	kVA
K	0.00	kVA	0.00	kVA
O	0.00	kVA	0.00	kVA
	0.00 TOTAL CONNECTED	kVA	0.00 TOTAL DEMAND	kVA
	LOAD AMPS		0.0 AMPS	

PHASE LOAD
PHASE A AMPS - 0.0
PHASE B AMPS - 0.0

% CONNECTED LOAD PER PHASE
PHASE A LOAD -
PHASE B LOAD -
0.0

PROJECT: QUINCY SHOP
PANEL: VL1
LOCATION: STORAGE 303
SECTION 1

AMPS: 225
MAIN: 3P-225 AMP
MOUNT: SURFACE
AIC: 10,000

VOLTS: 208Y/120 V
PHASE: 3-PHASE
SKIRT: NONE

NO.	DESCRIPTION	CODE	LOAD (VA)	BREAKER P	BREAKER AMP		BREAKER P	BREAKER AMP	LOAD (VA)	CODE	DESCRIPTION	NO.
1	RECEPTACLES - EQUIPMENT, STORAGE	R	900	1	20		1	20	667		EXHAUST FAN EF-7	2
3	RECEPTACLES - STORAGE 303	R	540	1	20		2	100			PANEL VL2	4
5	RECEPTACLES - STORAGE 304	R	720	1	20							6
7	LIGHTING CONTROL POWER		500	1	20		1	20	1127		OH DOOR	8
9	VEHICLE STORAGE BLOCK HEATER		1200	1	20		1	20	1127		OH DOOR	10
11	VEHICLE STORAGE BLOCK HEATER		1200	1	20		1	30	1600		GAS UNIT HEATER	12
13	VEHICLE STORAGE BLOCK HEATER		1200	1	20		1	20	540		RECEPTACLES - STORAGE 202	14
15	VEHICLE STORAGE BLOCK HEATER		1200	1	20							16
17	VEHICLE STORAGE BLOCK HEATER		1200	1	20		3	30	2700		AIR COMPRESSOR A/C-2	18
19	VEHICLE STORAGE BLOCK HEATER		1200	1	20							20
21	VEHICLE STORAGE BLOCK HEATER		1200	1	20							22
23	VEHICLE STORAGE BLOCK HEATER		1200	1	20		3	20	2000	H	ELECTRIC UNIT HEATER EUH-1	24
25	VEHICLE STORAGE BLOCK HEATER		1200	1	20						SPACE	26
27	VEHICLE STORAGE BLOCK HEATER		1200	1	20		1	20	800	O	LOUVER RELAY/POWER	28
29	VEHICLE STORAGE BLOCK HEATER		1200	1	20						ASPHALT STORAGE TANK	30
31	VEHICLE STORAGE BLOCK HEATER		1200	1	20							32
33	THERMOLAY UNIT			2	50							34
35							3	50	8718	M	WELL PUMP	36
37	DISTRIBUTOR		10400	2	20							38
39							1	20			SPARE	40
41	BEARCAT SEALER		1500	1	30		1	20			SPARE	42
S1												S2

CODE DESIGNATIONS
(L) - LIGHTS, 1.25 x CONN. LOAD
(R) - RECEPTACLES, FIRST 10 KVA + .5x REMAINING
(M) - MECHANICAL, 1.0 x CONN. LOAD
(H) - HEAT, 1.0 x CONN. LOAD
(K) - KITCHEN, NEC FACTOR x CONN. LOAD
(O) - OTHER , 1.0 x CONN. LOAD

	CONNECTED LOAD		DEMAND LOAD	
L	0.00	kVA	0.00	kVA
R	2.16	kVA	2.16	kVA
M	8.72	kVA	10.00	kVA
H	2.00	kVA	2.00	kVA
K	0.00	kVA	0.00	kVA
O	35.36	kVA	35.36	kVA
	48.24 TOTAL CONNECTED	kVA	50.42 TOTAL DEMAND	kVA
	LOAD AMPS		140.1 AMPS	

PHASE LOAD
PHASE A AMPS - 151.7
PHASE B AMPS - 141.2
PHASE C AMPS - 109.1

% CONNECTED LOAD PER PHASE
PHASE A LOAD - 100.0
PHASE B LOAD - 93.0
PHASE C LOAD - 71.9

No.	DATE	BY
4		
3		
2		
1		

CONSULTANTS:
SUMMIT PROFESSIONAL ENGINEERING, LLC
22 W. INDIANA AVE. SUITE E
SPOKANE, WA 99205
PHONE: (509)323-1563
FAX: (509)323-1565

ZECK BUTLER ARCHITECTS PS
The Pavilion Center 421 W Riverside Suite 220 Spokane WA 99201 t 509 . 456 . 0238 f 509 . 747 . 0570
e www.zeckbutler.com

SHEET TITLE: PANEL SCHEDULES, CONTROL DIAGRAM

PROJECT TITLE: QUINCY SHOP
GRANT COUNTY PUBLIC WORKS
EPHRATA, WASHINGTON

SEAL: DONALD RAY NIELSEN, STATE OF WASHINGTON, 36314, REGISTERED PROFESSIONAL ENGINEER
EXPIRES 08/16/05

DATE	04/02/04
DRAWN	DMK
CHECKED	DRN
PROJECT NUMBER	0415
DRAWING NO.	E0.4

KEYED NOTES:

1. COORDINATE WITH THE PUD TO PROVIDE A NEW, IN-LINE POWER POLE AT THIS POINT.
2. PAD MOUNTED TRANSFORMER AND VAULT TO BE PROVIDED BY GRANT COUNTY PUD. SEE SERVICE RISER FOR DETAILS. PROVIDE AND INSTALL A METER BASE. SEE SERVICE RISER FOR DETAILS.
3. HIGH VOLTAGE FEEDER.
4. MAIN SERVICE PANEL, BRANCH PANELS AND STEP-DOWN TRANSFORMER LOCATED ON MEZZANINE LEVEL AT THIS LOCATION.
5. PROVIDE SECONDARY TRANSFORMER FEEDERS FROM THE TRANSFORMER TO THE MAIN SERVICE PANEL. PROVIDE GRS CONDUIT THROUGH SLAB, ALONG INTERIOR WALL INTO BOTTOM OF MAIN PANEL. DISTANCE FROM SLAB FLOOR TO MAIN DISCONNECT MUST NOT EXCEED 15'. PROVIDE A 3/4" PVC CONDUIT FROM THE LOW VOLTAGE SIDE OF THE UTILITY TRANSFORMER TO THE COMMUNICATIONS BACKBOARD FOR FUTURE REMOTE UTILITY CO. METERING.
6. LOCATION OF THE DISTRIBUTION PANELS FOR VEHICLE STORAGE BUILDING.
7. **Item No27:** Sheet E1.1: Keyed note #7 should call the conduit to be run from panel MDP to panel VH1. :L. PROVIDE SEAL FITTINGS AT EACH END.
8. LOCATION OF THE COMMUNICATIONS BACKBOARD. SEE SHEET E1.3 FOR BACKBOARD INFORMATION.
9. PROVIDE (2) 4" PVC CONDUITS FROM THE BACKBOARD TO THE TELEPHONE PEDESTALNEAR THE EXISTING POWER POLE. PROVIDE A MEASURED PULL STRING IN EACH CONDUIT. COORDINATE WITH CENTURY TELEPHONE FOR FINAL PROPERTY LINE STUB LOCATION AND CONDUIT TERMINATION REQUIREMENTS.
10. EXISTING TELEPHONE PEDESTAL.
11. LOCATION OF COMMUNICATIONS BACKBOARD FOR VEHICLE STORAGE BUILDING.
12. PROVIDE A 2" PVC CONDUIT FROM BACKBOARD TO BACKBOARD. PROVIDE A NYLON PULL CORD AND CAP BOTH ENDS.
13. POLE MOUNTED LIGHT FIXTURE ON CONCRETE BASE. SEE POLE AND BASE DETAIL ON THIS SHEET. TYPICAL FOR ALL F1 FIXTURES.
14. GROUND MOUNTED SIGN ILLUMINATION FIXTURES. LOCATE FIXTURES EQUIDISTANT AT 36" FROM SIGN FACE. COORDINATE FINAL LOCATION WITH LANDSCAPING.
15. FIXTURE TO ILLUMINATE FLAGPOLE. RECESS MOUNT 36" FROM POLE BASE IN SIDEWALK.
16. LOCATION OF SEAL FITTINGS FOR GAS SYSTEM PIPING. EXTEND GRS PIPE TO 12" ABOVE GRADE AND MOUNT FITTINGS. COORDINATE WITH THE FUEL SYSTEM SUPPLIER FOR THE NUMBER AND SIZE OF FITTINGS REQUIRED. EXTEND CONDUITS IN BUILDING TO LOCATION OF GAS CONTROL EQUIPMENT. FOR BID PURPOSES CONSIDER CONTROLLER LOCATED AT COMMUNICATIONS BACKBOARD.
17. EMERGENCY STOP BUTTON LOCATIONS. MOUNT ON BUILDING OR PROVIDE GALVANIZED CHANNEL IRON MOUNTING POST. LOCATE AT +54" ABOVE GRADE OR SLAB.
18. PROVIDE 3/4" CONDUIT WITH (2)#14 EMERGENCY STOP BUTTON CONDUCTORS FROM CONTROL PEDESTAL TO STOP BUTTONS.
19. GAS CONTROL CONSOLE LOCATED ON SLAB BETWEEN DISPENSERS.
20. FUEL DISPENSERS. PROVIDE ALL CONDUIT AND CONNECTIONS AS REQUIRED.
21. PROVIDE (2) 4" CONDUITS FROM J-BOX IN SLAB UNDER CONTROL CONSOLE TO COMMUNICATIONS BACKBOARD. PROVIDE MEASURED PULL STRINGS IN EACH CONDUIT.
22. POWER CONDUITS FROM BUILDING TO FUEL DISPENSERS. COORDINATE WITH FUEL SYSTEM SUPPLIER FOR REQUIRED S AND COUNTS. FOR BID PURPOSES CONSIDER (2) 1" t WITH (3)#12 CONDUCTORS FROM DISPENSER TO POWER
23. CONDUITS FOR PUMP POWER AND CONTROL CABLES. COORDINATE WITH FUEL SYSTEM SUPPLIER FOR REQUIRED SIZES AND COUNTS. FOR BID PURPOSES CONSIDER (3) 1" CONDUITS FROM TANKS TO COMMUNICATIONS BACKBOARD. PROVIDE SEAL FITTINGS AT EACH END. PROVIDE POWER CONDUIT AND CONDUCTORS FROM POWER PANEL TO TANK PUMPS. CONDUCTORS SHALL BE (3) #12, #12 GND PER PUMP IN 1" CONDUIT MINIMUM. COORDINATE SIZE AND COUNT WITH SUPPLIED PUMP MOTOR REQUIREMENTS. PROVIDE SEAL FITTINGS AT BOTH ENDS OF CONDUIT RUNS.
24. PROVIDE (2)2" CONDUITS FROM THE TANK LOCATION TO THE CONTROL CONSOLE.
25. PROVIDE (1)2" CONDUIT FROM CONTROL CONSOLE TO DISPENSERS.
26. LOCATION OF WELL PUMP CONTROL PANEL IN WASHER ROOM.
27. FEEDER FOR WELL PUMP. SEE SHEET E2.1.
28. CONDUIT AND CONDUCTORS FOR CONTROL FLOATS. SEE SHEET E2.1.
29. CONDUIT AND CONDUCTORS FOR REMOTE ALARM. SEE SHEET E2.1.
30. CONDUIT AND CONDUCTORS FOR REMOTE ALARM. SEE SHEET E2.1.
31. CONDUIT AND CONDUCTOR FOR ASPHALT STORAGE TANK. PROVIDE(4)#3,#8GND IN 1-1/2" CONDUIT FROM THE POWER PANEL LOCATION TO THE OWNER SELECTED EQUIPMENT LOCATION. ASSUME A 250' RUN. EQUIPMENT MAY BE 208 OR 480 V 3-PHASE. PROVIDE A 3-POLE BREAKER AND TERMINATIONS.
32. PROVIDE (2) 1" CONDUITS FROM THE J-BOX UNDER THE CONTROL CONSOLE TO EACH DISPENSER.
33. POWER CONDUCTORS IN CONDUIT TO AIR WATER UNIT. (2)#10, #10G, 3/4" CONDUIT.

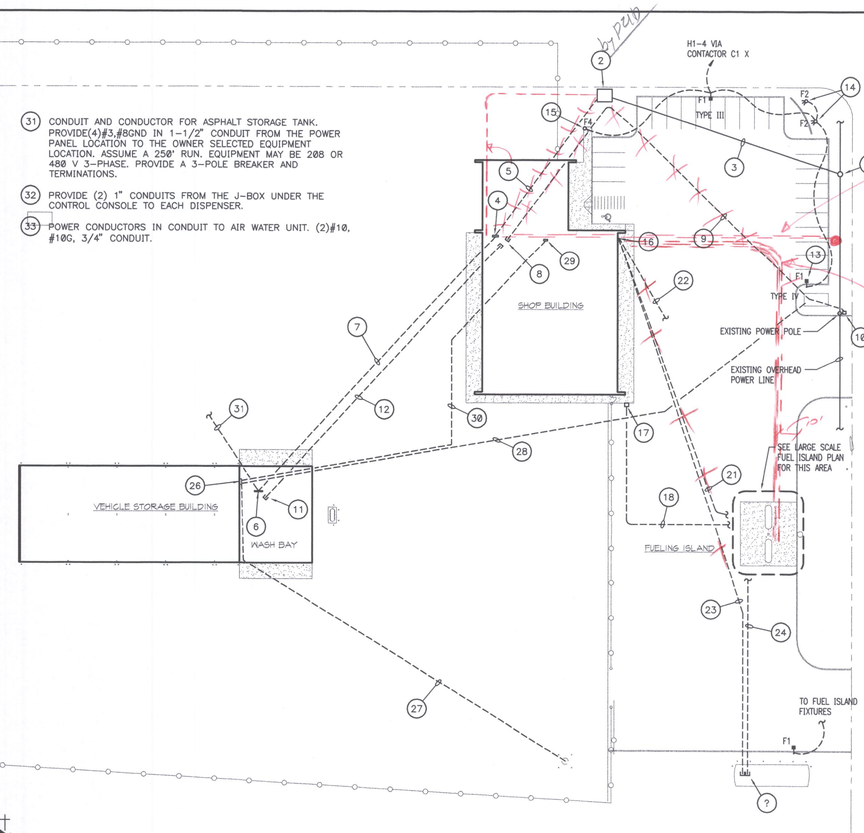

SITE PLAN – ELECTRICAL
SCALE: 1" = 40'-0"

#9 - 2 4" PVC FROM POLE LOCATION DIRECTLY INTO BULK BACKBOARD IN MEZZ

FUEL DISPENSING SYSTEM NOTES:

1. THE CONDUIT AND CONDUCTORS CALLED OUT GIVE THE CONTRACTOR THE BASIS FOR BIDDING PURPOSES. THE CONTRACTOR SHALL PROVIDE ALL RACEWAY AND CONDUITS REQUIRED TO SUPPORT THE SUPPLIED SYSTEM BASED ON SECTION 13300 OF THE SPECIFICATIONS.
2. PROVIDE ALL SEAL FITTINGS AND GRS PIPE LENGTHS REQUIRED IN RATED AREAS AT DISPENSING UNITS AND FUEL TANKS.
3. PROVIDE A GROND ROD AND GROUND CONNECTION AT EACH DISPENSER AND FUEL TANK.
4. ALL EMPTY CONDUITS WILL BE PROVIDED WITH A PULL STRING AND CAPPED. PROVIDE A TAG FOR EACH CONDUIT STATING THE LOCATION OF THE OTHER END.

#21, 22 + 23 FROM BUILDING AND TIE INTO COMMON TRENCH WITH AIR WATER TO ISLAND @ - 2' BELOW GRADE SEE N/W PETROLEUM AS BUILT DRWG ON C4.0

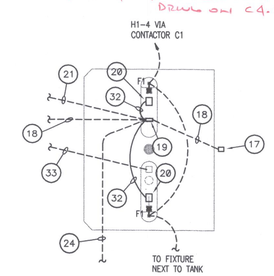

FUEL ISLAND – LARGE SCALE PLAN
SCALE: 1/16" = 1'-0"

NOTES:

1. BASE AT FUEL ISLAND TO HAVE 36" EXPOSED BASE, 6' BELOW GRADE.
2. FIXTURES AT FUEL ISLAND MOUNTED PER DETAIL SHEET A8.1.

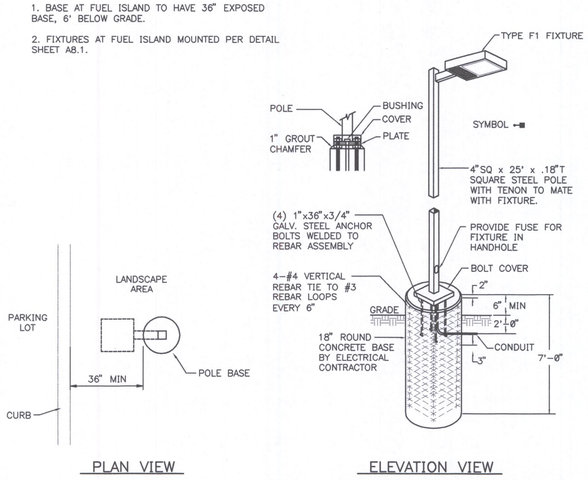

LIGHT POLE DETAIL
SCALE: NONE

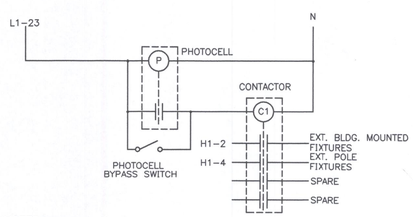

NOTES:

1. PHOTOCELL SHALL BE A TORK 2101. MOUNT ON ROOF AND ORIENT NORTH WARD.
2. THE CONTACTOR SHALL BE A SQUARE D CLASS 8903, ELECTRICALLY HELD OR EQUAL.
3. USE A SPARE ON THE CONTACTOR TO PROVIDED CONTROL TO THE EXISTING AND REMAINING EXTERIOR FIXTURES.

EXTERIOR LIGHTING CONTROL – SHOP BUILDING
SCALE: NONE

(CON) – BY CONTRACTOR

(PUD) – BY PUBLIC UTILITIES DISTRICT

SCHEDULE ALL WORK WITH RON WILLIAMS AT THE PUD (509 754-3541.

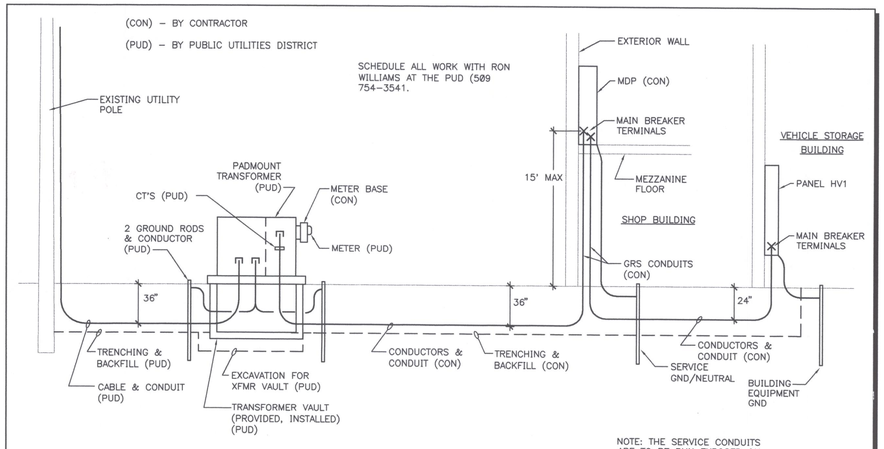

NOTE: THE SERVICE CONDUITS ARE TO BE RUN EXPOSED ON THE WALL IN THE SHOP.

SERVICE RISER
SCALE: NONE

No.	DATE	BY
4		
3		
2		
1		

CONSULTANTS:
SUMMIT PROFESSIONAL ENGINEERING, LLC
22 W. INDIANA AVE, SUITE E
SPOKANE, WA 99205
PHONE: (509)323-1583
FAX: (509)323-1585

ZECK BUTLER ARCHITECTS PS
The Business Center 421 W Riverside Suite 220 Spokane WA 99201 t 509 . 456 . 8236 f 509 . 747 . 0570
a www.zeckbutler.com

SHEET TITLE: SITE PLAN- ELECTRICAL, DETAILS

PROJECT TITLE: QUINCY SHOP
GRANT COUNTY PUBLIC WORKS
EPHRATA, WASHINGTON

SEAL: DONALD RAY NIESEN, STATE OF WASHINGTON, 36314, REGISTERED PROFESSIONAL ENGINEER
EXPIRES 09/16/05

DATE	04/02/04
DRAWN	DMK
CHECKED	DRN
PROJECT NUMBER	0415
DRAWING NO.	E1.1

KEYED NOTES:

1. COORDINATE WITH THE PUD TO PROVIDE A NEW, IN-LINE POWER POLE AT THIS POINT.
2. PAD MOUNTED TRANSFORMER AND VAULT TO BE PROVIDED BY GRANT COUNTY PUD. SEE SERVICE RISER FOR DETAILS. PROVIDE AND INSTALL A METER BASE. SEE SERVICE RISER FOR DETAILS.
3. HIGH VOLTAGE FEEDER.
4. MAIN SERVICE PANEL, BRANCH PANELS AND STEP-DOWN TRANSFORMER LOCATED ON MEZZANINE LEVEL AT THIS LOCATION.
5. PROVIDE SECONDARY TRANSFORMER FEEDERS FROM THE TRANSFORMER TO THE MAIN SERVICE PANEL. PROVIDE GRS CONDUIT THROUGH SLAB, ALONG INTERIOR WALL INTO BOTTOM OF MAIN PANEL. DISTANCE FROM SLAB FLOOR TO MAIN DISCONNECT MUST NOT EXCEED 15'. PROVIDE A 3/4" PVC CONDUIT FROM THE LOW VOLTAGE SIDE OF THE UTILITY TRANSFORMER TO THE COMMUNICATIONS BACKBOARD FOR FUTURE REMOTE UTILITY CO. METERING.
6. LOCATION OF THE DISTRIBUTION PANELS FOR VEHICLE STORAGE BUILDING.
7. **Item No27:** Sheet E1.1: Keyed note #7 should call the conduit to be run from panel MDP to panel VH1. :L. PROVIDE SEAL FITTINGS AT EACH END.
8. LOCATION OF THE COMMUNICATIONS BACKBOARD. SEE SHEET E1.3 FOR BACKBOARD INFORMATION.
9. PROVIDE (2) 4" PVC CONDUITS FROM THE BACKBOARD TO THE TELEPHONE PEDESTALNEAR THE EXISTING POWER POLE. PROVIDE A MEASURED PULL STRING IN EACH CONDUIT. COORDINATE WITH CENTURY TELEPHONE FOR FINAL PROPERTY LINE STUB LOCATION AND CONDUIT TERMINATION REQUIREMENTS.
10. EXISTING TELEPHONE PEDESTAL.
11. LOCATION OF COMMUNICATIONS BACKBOARD FOR VEHICLE STORAGE BUILDING.
12. PROVIDE A 2" PVC CONDUIT FROM BACKBOARD TO BACKBOARD. PROVIDE A NYLON PULL CORD AND CAP BOTH ENDS.
13. POLE MOUNTED LIGHT FIXTURE ON CONCRETE BASE. SEE POLE AND BASE DETAIL ON THIS SHEET. TYPICAL FOR ALL F1 FIXTURES.
14. GROUND MOUNTED SIGN ILLUMINATION FIXTURES. LOCATE FIXTURES EQUIDISTANT AT 36" FROM SIGN FACE. COORDINATE FINAL LOCATION WITH LANDSCAPING.
15. FIXTURE TO ILLUMINATE FLAGPOLE. RECESS MOUNT 36" FROM POLE BASE IN SIDEWALK.
16. LOCATION OF SEAL FITTINGS FOR GAS SYSTEM PIPING. EXTEND GRS PIPE TO 12" ABOVE GRADE AND MOUNT FITTINGS. COORDINATE WITH THE FUEL SYSTEM SUPPLIER FOR THE NUMBER AND SIZE OF FITTINGS REQUIRED. EXTEND CONDUITS IN BUILDING TO LOCATION OF GAS CONTROL EQUIPMENT. FOR BID PURPOSES CONSIDER CONTROLLER LOCATED AT COMMUNICATIONS BACKBOARD.
17. EMERGENCY STOP BUTTON LOCATIONS. MOUNT ON BUILDING OR PROVIDE GALVANIZED CHANNEL IRON MOUNTING POST. LOCATE AT +54" ABOVE GRADE OR SLAB.
18. PROVIDE 3/4" CONDUIT WITH (2)#14 EMERGENCY STOP BUTTON CONDUCTORS FROM CONTROL PEDESTAL TO STOP BUTTONS.
19. GAS CONTROL CONSOLE LOCATED ON SLAB BETWEEN DISPENSERS.
20. FUEL DISPENSERS. PROVIDE ALL CONDUIT AND CONNECTIONS AS REQUIRED.
21. PROVIDE (2) 4" CONDUITS FROM J-BOX IN SLAB UNDER CONTROL CONSOLE TO COMMUNICATIONS BACKBOARD. PROVIDE MEASURED PULL STRINGS IN EACH CONDUIT.
22. POWER CONDUITS FROM BUILDING TO FUEL DISPENSERS. COORDINATE WITH FUEL SYSTEM SUPPLIER FOR REQUIRED S AND COUNTS. FOR BID PURPOSES CONSIDER (2) 1" t WITH (3)#12 CONDUCTORS FROM DISPENSER TO POWER
23. CONDUITS FOR PUMP POWER AND CONTROL CABLES. COORDINATE WITH FUEL SYSTEM SUPPLIER FOR REQUIRED SIZES AND COUNTS. FOR BID PURPOSES CONSIDER (3) 1" CONDUITS FROM TANKS TO COMMUNICATIONS BACKBOARD. PROVIDE SEAL FITTINGS AT EACH END. PROVIDE POWER CONDUIT AND CONDUCTORS FROM POWER PANEL TO TANK PUMPS. CONDUCTORS SHALL BE (3) #12, #12 GND PER PUMP IN 1" CONDUIT MINIMUM. COORDINATE SIZE AND COUNT WITH SUPPLIED PUMP MOTOR REQUIREMENTS. PROVIDE SEAL FITTINGS AT BOTH ENDS OF CONDUIT RUNS.
24. PROVIDE (2)2" CONDUITS FROM THE TANK LOCATION TO THE CONTROL CONSOLE.
25. PROVIDE (1)2" CONDUIT FROM CONTROL CONSOLE TO DISPENSERS.
26. LOCATION OF WELL PUMP CONTROL PANEL IN WASHER ROOM.
27. FEEDER FOR WELL PUMP. SEE SHEET E2.1.
28. CONDUIT AND CONDUCTORS FOR CONTROL FLOATS. SEE SHEET E2.1.
29. CONDUIT AND CONDUCTORS FOR REMOTE ALARM. SEE SHEET E2.1.
30. CONDUIT AND CONDUCTORS FOR REMOTE ALARM. SEE SHEET E2.1.
31. CONDUIT AND CONDUCTOR FOR ASPHALT STORAGE TANK. PROVIDE(4)#3,#8GND IN 1-1/2" CONDUIT FROM THE POWER PANEL LOCATION TO THE OWNER SELECTED EQUIPMENT LOCATION. ASSUME A 250' RUN. EQUIPMENT MAY BE 208 OR 480 V 3-PHASE. PROVIDE A 3-POLE BREAKER AND TERMINATIONS.
32. PROVIDE (2) 1" CONDUITS FROM THE J-BOX UNDER THE CONTROL CONSOLE TO EACH DISPENSER.
33. POWER CONDUCTORS IN CONDUIT TO AIR WATER UNIT. (2)#10, #10G, 3/4" CONDUIT.

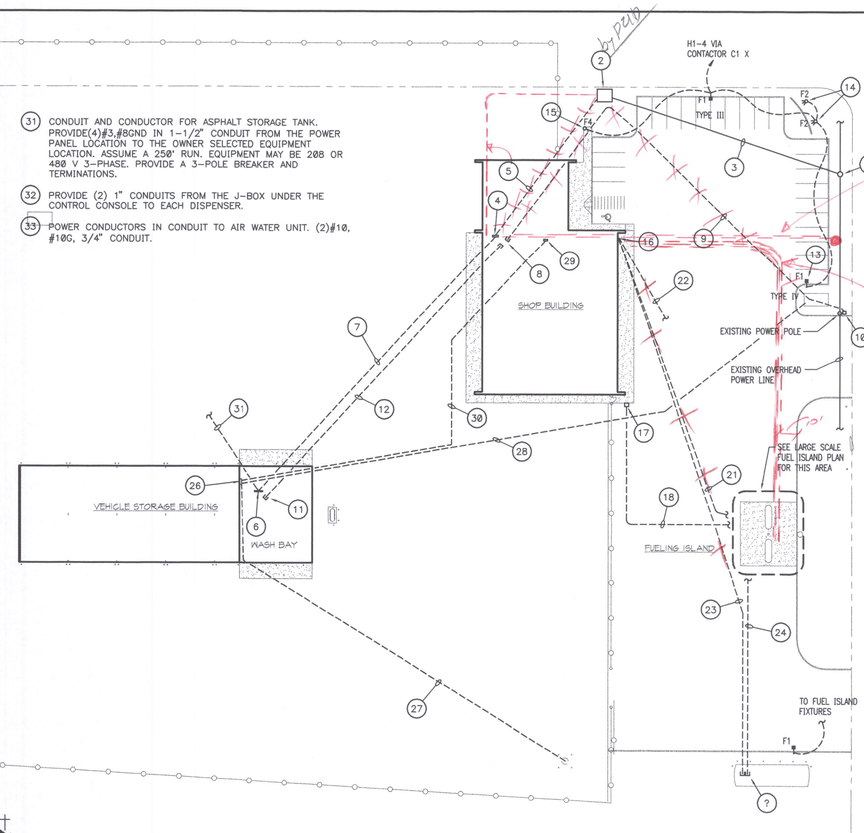

SITE PLAN – ELECTRICAL
SCALE: 1" = 40'-0"

#9 - 2 4" PVC FROM POLE LOCATION DIRECTLY INTO BULK BACKBOARD IN MEZZ

FUEL DISPENSING SYSTEM NOTES:

1. THE CONDUIT AND CONDUCTORS CALLED OUT GIVE THE CONTRACTOR THE BASIS FOR BIDDING PURPOSES. THE CONTRACTOR SHALL PROVIDE ALL RACEWAY AND CONDUITS REQUIRED TO SUPPORT THE SUPPLIED SYSTEM BASED ON SECTION 13300 OF THE SPECIFICATIONS.
2. PROVIDE ALL SEAL FITTINGS AND GRS PIPE LENGTHS REQUIRED IN RATED AREAS AT DISPENSING UNITS AND FUEL TANKS.
3. PROVIDE A GROND ROD AND GROUND CONNECTION AT EACH DISPENSER AND FUEL TANK.
4. ALL EMPTY CONDUITS WILL BE PROVIDED WITH A PULL STRING AND CAPPED. PROVIDE A TAG FOR EACH CONDUIT STATING THE LOCATION OF THE OTHER END.

#21, 22 + 23 FROM BUILDING AND TIE INTO COMMON TRENCH WITH AIR WATER TO ISLAND @ - 2' BELOW GRADE SEE N/W PETROLEUM AS BUILT DRWG ON C4.0

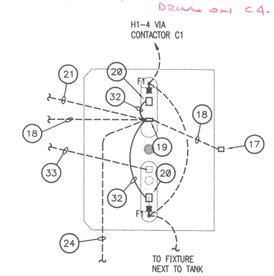

FUEL ISLAND – LARGE SCALE PLAN
SCALE: 1/16" = 1'-0"

NOTES:

1. BASE AT FUEL ISLAND TO HAVE 36" EXPOSED BASE, 6' BELOW GRADE.
2. FIXTURES AT FUEL ISLAND MOUNTED PER DETAIL SHEET A8.1.

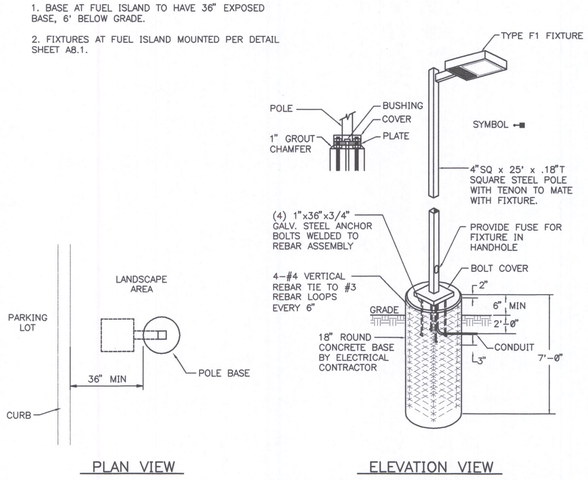

LIGHT POLE DETAIL
SCALE: NONE

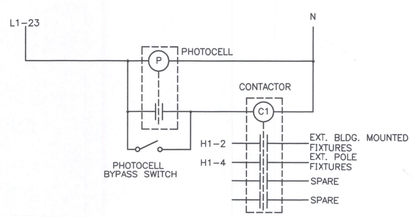

NOTES:

1. PHOTOCELL SHALL BE A TORK 2101. MOUNT ON ROOF AND ORIENT NORTH WARD.
2. THE CONTACTOR SHALL BE A SQUARE D CLASS 8903, ELECTRICALLY HELD OR EQUAL.
3. USE A SPARE ON THE CONTACTOR TO PROVIDED CONTROL TO THE EXISTING AND REMAINING EXTERIOR FIXTURES.

EXTERIOR LIGHTING CONTROL – SHOP BUILDING
SCALE: NONE

(CON) – BY CONTRACTOR

(PUD) – BY PUBLIC UTILITIES DISTRICT

SCHEDULE ALL WORK WITH RON WILLIAMS AT THE PUD (509 754-3541.

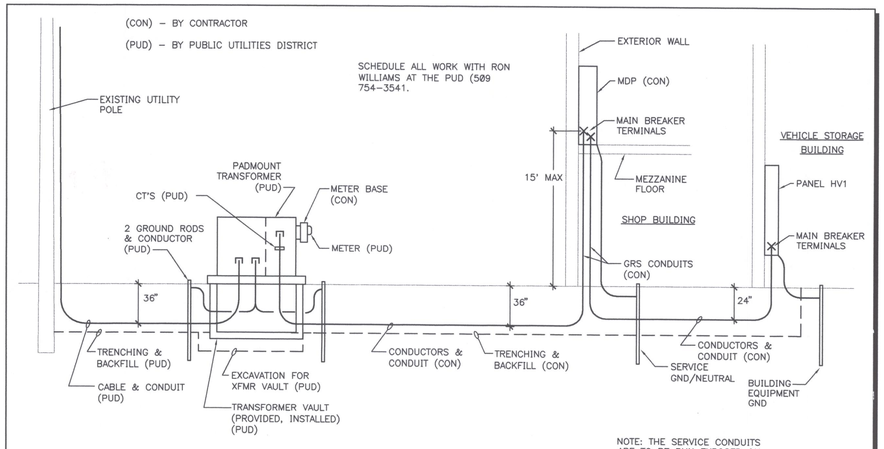

NOTE: THE SERVICE CONDUITS ARE TO BE RUN EXPOSED ON THE WALL IN THE SHOP.

SERVICE RISER
SCALE: NONE

No.	DATE	BY
4		
3		
2		
1		

CONSULTANTS:
SUMMIT PROFESSIONAL ENGINEERING, LLC
22 W. INDIANA AVE, SUITE E
SPOKANE, WA 99205
PHONE: (509)323-1583
FAX: (509)323-1585

ZECK BUTLER ARCHITECTS PS
The Business Center 421 W Riverside Suite 220 Spokane WA 99201 t 509 . 456 . 8236 f 509 . 747 . 0570
a www.zeckbutler.com

SHEET TITLE: SITE PLAN- ELECTRICAL, DETAILS

PROJECT TITLE: QUINCY SHOP
GRANT COUNTY PUBLIC WORKS
EPHRATA, WASHINGTON

SEAL: DONALD RAY NIESEN, STATE OF WASHINGTON, 36314, REGISTERED PROFESSIONAL ENGINEER
EXPIRES 09/16/05

DATE	04/02/04
DRAWN	DMK
CHECKED	DRN
PROJECT NUMBER	0415
DRAWING NO.	E1.1

KEYED NOTES:

1. FIXTURES CHAIN HUNG FROM STRUCTURE AT 9' AFF. COORDINATE FINAL LOCATION WITH MECHANICAL EQUIPMENT.
2. UNSWITCHED CIRCUIT FOR EMERGENCY FIXTURE BATTERY CHARGING.
3. SEE ARCHITECTURAL ELEVATIONS FOR MOUNTING HEIGHTS AND FINAL LOCATIONS.
4. FIXTURES CHAIN HUNG TO 16' AFF. COORDINATE WITH OTHER AREA EQUIPMENT.

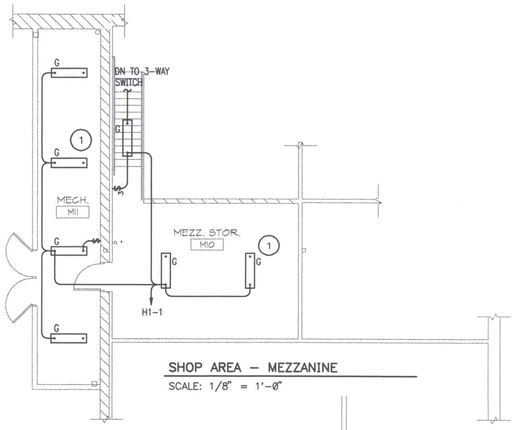

SHOP AREA – MEZZANINE

SCALE: 1/8" = 1'-0"

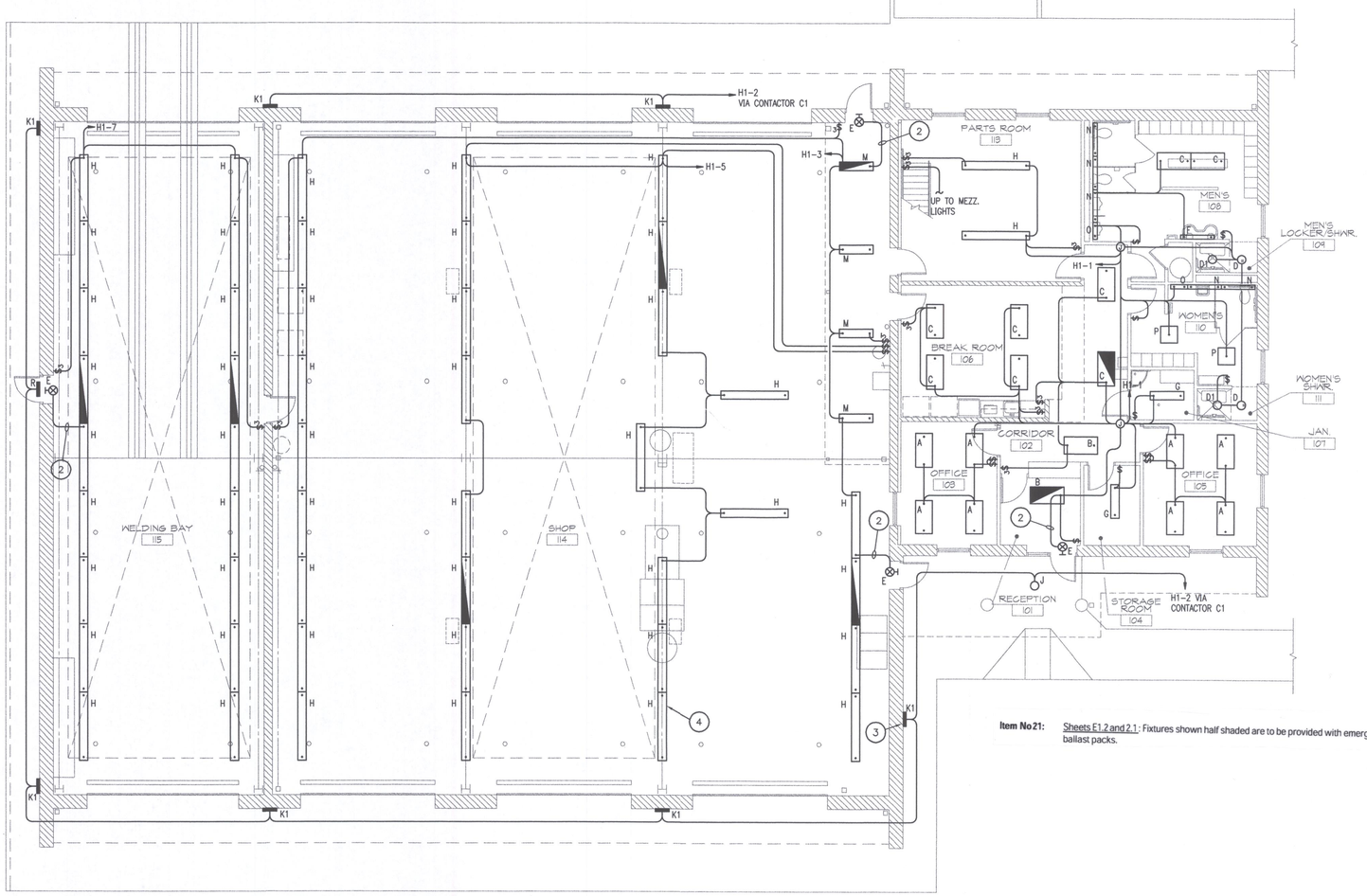

Item No 21: Sheets E1.2 and 2.1: Fixtures shown half shaded are to be provided with emergency ballast packs.

SHOP BLDG. FLOOR PLAN – LIGHTING

SCALE: 1/8" = 1'-0"

No.	DATE	BY
4		
3		
2		
1		

CONSULTANTS:
SUMMIT PROFESSIONAL ENGINEERING, LLC
22 W. INDIANA AVE, SUITE E
SPOKANE, WA 99205
PHONE: (509)323-1563
FAX: (509)323-1565

ZECK BUTLER ARCHITECTS PS
The Pavilions Center 421 W Riverside Suite 220 Spokane WA 99201 t 509 . 456 . 8238 f 509 . 747 . 0370
e www.zeckbutler.com

SHEET TITLE: SHOP FLOOR PLAN - LIGHTING

PROJECT TITLE: QUINCY SHOP
GRANT COUNTY PUBLIC WORKS
EPHRATA, WASHINGTON

SEAL: DONALD RAY NIELSEN, STATE OF WASHINGTON, 35314, REGISTERED PROFESSIONAL ENGINEER
EXPIRES 06/16/05

DATE	04/02/04
DRAWN	DMK
CHECKED	DRN
PROJECT NUMBER	0415
DRAWING NO.	E1.2

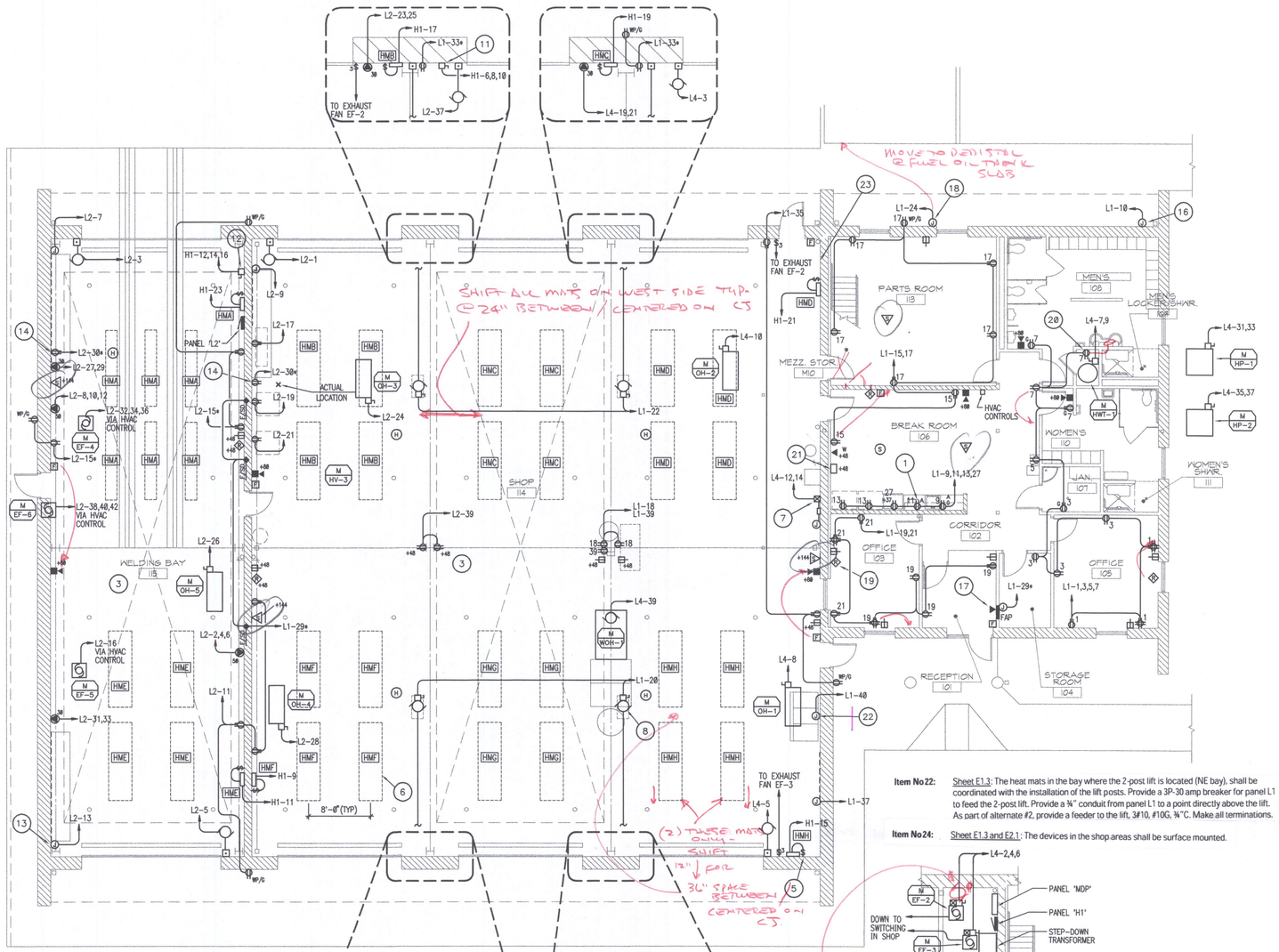

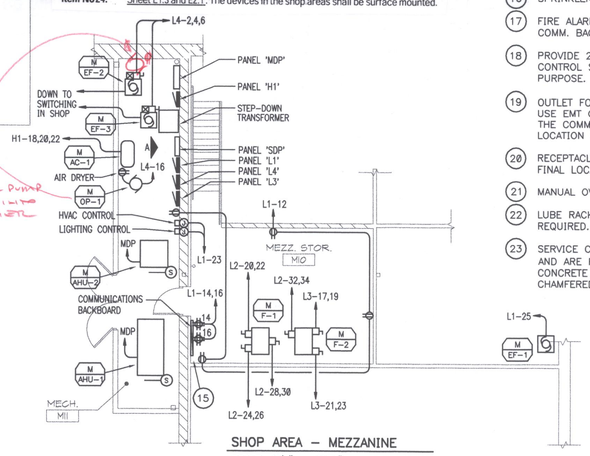

SHOP AREA – MEZZANINE

SCALE: 1/8" = 1'-0"

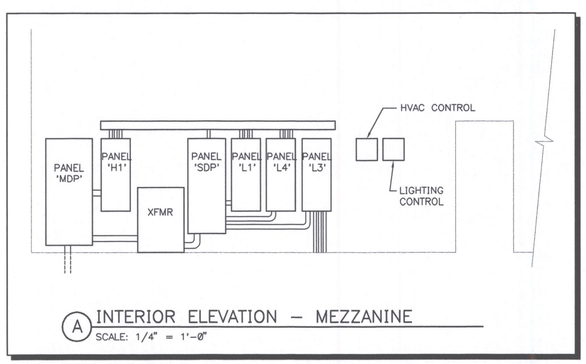

A INTERIOR ELEVATION – MEZZANINE

SCALE: 1/4" = 1'-0"

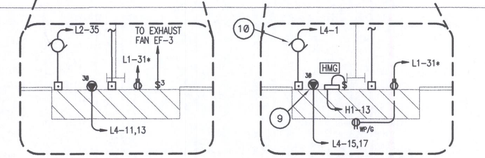

BREAKOUT (TYP)

SCALE: 1/4" = 1'-0"

SHOP BLDG. FLOOR PLAN – POWER

SCALE: 1/8" = 1'-0"

GENERAL NOTES:

1. COORDINATE THE LOCATION OF THE HEAT MATS WITH THE CONTROL JOINTS SHOWN ON SHEET S2.1

2. FOR THE OIL CIRCULATION PUMP CONTROLS IN THE SHOP BUILDING, PROVIDE A CONTROL INTERLOCK FROM EACH OF THE FIVE OIL-FIRED UNIT HEATERS TO THE OIL CIRCULATION PUMP CONTROL PACKAGE. PROVIDE ALL NECESSARY SWITCHES, RELAYS, WIRING, AND ASSOCIATED EQUIPMENT.

THE SEQUENCE OF OPERATION IS TO BE:

A. ON A CALL FOR HEAT FROM ANY OIL-FIRED UNIT HEATER, THE OIL CIRCULATION PUMP SHALL START.

B. WHEN NO UNIT HEATER IS CALLING FOR HEAT, THE OIL CIRCULATION PUMP SHALL STOP.

THE REVISION TO THE CONTROLS IS NOT TO DEFEAT THE SEQUENCING AND SAFETY CONTROL OF THE PUMP CONTROL PACKAGE.

3. ALL CONDUIT RISERS IN SHOP AREA MUST BE GALVANIZED RIGID STEEL WITH NO COUPLINGS BELOW 24" ABOVE FLOOR.

KEYED NOTES:

1. OUTLET FOR MICROWAVE OVEN LOCATED IN UPPER CABINETS.
2. NOT USED
3. ALL 120V RECEPTACLES IN THIS AREA TO BE GFI PROTECTED. ALL RECEPTACLES TO BE MOUNTED AT +48 AFF.
4. NOT USED
5. J-BOXES MOUNTED IN WALL FOR HEAT MAT CONNECTION, 8 TYPICAL. SEE DETAIL ON SHEET E0.2.
6. HEAT MAT LOCATIONS. COORDINATE PLACEMENT WITH CONTROL JOINTS SHEET S2.1. SEE CONNECTION DETAIL SHEET E0.2. ORDER MATS WITH SUFFICIENT LENGTH OF COLD LEADS TO REACH THE CONNECTION J-BOX. MAKE PROVISIONS FOR THE COLD LEADS TO CROSS THE CONTROL JOINTS.
7. **Item No.25:** Sheet E1.3: The buck-boost transformer called out in keyed note 7 shall be a 5kVA 208:240 volt, 1-phase unit and shall be mounted to the wall surface at +72".
8. MOTORIZED HOSE REEL, TYPICAL OF 4. PROVIDE DISCONNECT AS REQUIRED.
9. GENERAL PURPOSE 1-PHASE, 208 VOLT RECEPTACLE, TYPICAL OF 6. SEE PANEL SCHEDULE FOR AMPERAGE RATINGS.
10. OVERHEAD DOOR MOTOR AND CONTROL STATION. PROVIDE ALL CIRCUITRY AND TERMINATIONS. TYPICAL OF 8.
11. DISCONNECT FOR BAY CRANE. PROVIDE CIRCUIT TO POWER RAILS AND TERMINATE. COORDINATE WITH MANUFACTURER FOR CONNECTION AND CIRCUIT DETAILS.
12. DISCONNECT FOR WELDING BAY CRANE. PROVIDE CIRCUIT TO POWER RAILS AND TERMINATE. COORDINATE WITH MANUFACTURER FOR CONNECTION AND CIRCUIT DETAILS.
13. WIREMOLD 2000 PLUG STRIP WITH GFI RECEPTACLE ON 18" CENTERS. STRIP TO BE LENGTH OF WORKBENCH. WALL MOUNT 2" ABOVE BACKSPLASH OF WORKBENCH. TYPICAL 4 LOCATIONS.
14. DEDICATED 20 AMP RECEPTACLE FOR CHOP SAW. PROVIDE #10 AWG CIRCUIT. COORDINATE FINAL LOCATION IN SHOP AND WELDING SHOP. PROVIDE A PHENOLIC TAG FOR THE RECEPTACLE STATING PURPOSE.
15. PROVIDE 12" LONG GROUND BAR WITH #6 CU GND TO SERVICE GROUNDING POINT. PROVIDE A 4'X8'X3/4" CDX PLYWOOD BACKBOARD FOR COMMUNICATIONS. THE BACKBOARD SHALL HAVE 2 COATS OF GREY PRIMER. MOUNT HORIZONTALLY WITH BOTTOM 12" A.F.F.
16. SPRINKLER CONTROLLER MOUNTED TO BUILDING EXTERIOR.
17. FIRE ALARM CONTROL PANEL. PROVIDE TELEPHONE CONNECTION TO COMM. BACKBOARD.
18. PROVIDE 20 FEET OF HEAT TRACE FOR FUEL OIL LINES. PROVIDE CONTROL SWITCH IN MECHANICAL MEZZANINE WITH TAG INDICATING PURPOSE. MAKE ALL REQUIRED CONNECTIONS.
19. OUTLET FOR RADIO. PROVIDE A 4-SQUARE BOX WITH 3/4" CONDUIT. USE EMT CONDUIT AND PROVIDE RACEWAY FROM EACH LOCATION TO THE COMMUNICATIONS BACKBOARD. COORDINATE WITH OWNER FOR FINAL LOCATION OF TRANSCEIVER.
20. RECEPTACLE FOR THE HOT WATER RECIRCULATION PUMP. COORDINATE FINAL LOCATION WITH THE PLUMBING CONTRACTOR
21. MANUAL OVER RIDE SWITCH FOR HVAC CONTROL SYSTEM.
22. LUBE RACK POWER CONNECTION. MAKE CONNECTIONS TO EQUIPMENT AS REQUIRED.
23. SERVICE CONDUITS COME UP THROUGH SLAB IN SHOP AT THIS POINT AND ARE RUN UP SHOP WALL TO MEZZANINE. PROVIDE A 24" HIGH CONCRETE CURB AROUND CONDUITS. CHAMFER EDGES. PAINT CHAMFERED EDGE YELLOW.

Item No.22: Sheet E1.3: The heat mats in the bay where the 2-post lift is located (NE bay), shall be coordinated with the installation of the lift posts. Provide a 3P-30 amp breaker for panel L1 to feed the 2-post lift. Provide a ¾" conduit from panel L1 to a point directly above the lift. As part of alternate #2, provide a feeder to the lift, 3#10, #10G, ¾"C. Make all terminations.

Item No.24: Sheet E1.3 and E2.1: The devices in the shop areas shall be surface mounted.

No.	DATE	BY
4		
3		
2		
1		

CONSULTANTS:
SUMMIT PROFESSIONAL ENGINEERING, LLC
22 W. INDIANA AVE., SUITE E
SPOKANE, WA 99205
PHONE: (509)323-1563
FAX: (509)323-1565

ZECK BUTLER ARCHITECTS PS
The Pavilion Center 421 W Riverside Suite 220 Spokane WA 99201 t 509 . 456 . 8336 f 509 . 747 . 0570
e www.zeckbutler.com

SHEET TITLE: SHOP FLOOR PLAN - POWER/SYSTEMS, DETAILS

PROJECT TITLE: QUINCY SHOP
GRANT COUNTY PUBLIC WORKS
EPHRATA, WASHINGTON

SEAL: DONALD RAY NIELSEN, STATE OF WASHINGTON, 30314, REGISTERED PROFESSIONAL ENGINEER
EXPIRES 09/16/05

DATE	04/02/04
DRAWN	DMK
CHECKED	DRN
PROJECT NUMBER	0415
DRAWING NO.	E1.3

KEYED NOTES:

1. PANEL 'HV1', 480Y/277 VOLT 3-PHASE PANEL FOR LIGHTING.
2. STEP-DOWN TRANSFORMER T2 FOR CONVERSION TO 208Y/120 VOLT BRANCH CIRCUIT AND RECEPTACLE POWER.
3. PANEL 'VL1', 208Y/120 VOLT BRANCH CIRCUIT PANEL AND 'VL2', 208/120 VOLT BRANCH CIRCIUT PANEL.
4. LOCATION OF 24"x24"x 3/4" COMMUNICATIONS BACKBOARD, MOUNT TOP OF BOARD AT 6'-6". BACKBOARD FOR FUTURE USE. STUB 2" CONDUIT TO BOTTOM OF BOARD AND CAP. BACKBOARD SHALL HAVE 2-COATS OF GREY PRIMER. CONNECT TO SHOP BUILDING BACKBOARD WITH THREE (3) - 4-PAIR CAT 5E CABLES.
5. BOTTOM OF FIXTURE HUNG TO TOP OF DOOR TRACK.
6. REFER TO ARCHITECTURAL ELEVATIONS FOR MOUNTING HEIGHTS AND PLACEMENT OF "K" FIXTURES.
7. OVERHEAD DOOR MOTOR. PROVIDE CONTROL CIRCUIT AND ALL TERMINATIONS.
8. DISCONNECT FOR PRESSURE WASHER. NEMA 3R.
9. DISCONNECT FOR AIR COMPRESSOR. NEMA 3R.
10. MOTORIZED DAMPERS. INTERTIE WITH EXHAUST FANS. CONTRACTOR TO PROVIDE A CONTROL RELAY TO POWER LOUVERS. THE RELAY MUST HAVE A 24 VAC COIL AND 20 AMP, 120VAC CONTACTS (2-NO, 2-NC). MOUNT RELAY IN A NEMA 1 ENCLOSURE NEAR THE WASHER UNIT. A 120 VOLT CIRCUIT, VL1-28, IS TO POWER THE LOUVER MOTORS. CONNECT CIRCUIT SO THAT WHEN THE WASHER IS ENERGIZED, THE LOUVER WILL OPEN. MAKE CONTROL CONNECTIONS TO THE WASHER AT TERMINALS 1 AND 4 OF THE SB600H MODULE IN THE WASHER CONTROLLER. THIS IS THE MODULE THAT CONTROLS THE GAS VALVE AND IS TO BE IN PARALLEL WITH THE SOLENOID AND ENERGIZE THE LOUVER RELAY WHEN THE WASHER IS IN HEATING MODE.
11. INTERMATIC #FD2H TIME SWITCH WITH #146MT494A KNOB. MOUNT ON WALL IN AN INTERMATIC WEATEHRPROOF COVER. TIMESWITCH IS TO CONTROL EXHAUST FAN 7.
12. JUNCTION BOX FOR REMOTE SWITCH FOR PRESSURE WASHER. MOUNT AT +48 INCHES A.F.F. RUN 3/4 INCH CONDUIT AND 7, 16 GAUGE CONDUCTORS FROM SWITCH TO PRESSURE WASHER TERMINALS. RUN ONE EACH OF RED, BLUE, YELLOW, ORANGE, BLACK, BROWN AND WHITE. MAKE FINAL WIRE CONNECTIONS TO PRESSURE WASHER PER EQUIPMENT SUPPLIERS REQUIREMENTS.
13. RECEPTACLE FOR THERMOLAY UNIT. PROVIDE A 220 AMP 1-PHASE RECEPTACLE IN A NEMA 3R ENCLOSURE EQUAL TO A MIDWEST POWER OUTLET ENCLOSURE. VERIFY EXACT RECEPTACLE CONFIGURATION WITH EQUIPMENT.
14. RECEPTACLE FOR BEARCAT CRACK SEALER. PROVIDE A 30 AMP 120 VAC, TWIST-LOCK RECEPTACLE TO MATCH EXISTING PLUG IN A NEMA 3R ENCLOSURE EQUAL TO A MIDWEST POWER OUTLET ENCLOSURE. VERIFY EXACT RECEPTACLE CONFIGURATION WITH EQUIPMENT.
15. RECEPTACLE FOR BEARCAT DISTRIBUTOR. PROVIDE A 220 AMP 1-PHASE RECEPTACLE IN A NEMA 3R ENCLOSURE EQUAL TO A MIDWEST POWER OUTLET ENCLOSURE. VERIFY EXACT RECEPTACLE CONFIGURATION WITH EQUIPMENT.
16. WELL PUMP CONTROL PANEL. SURFACE MOUNT TO WALL. PROVIDE A 3/4" CONDUIT WITH CONTROL CONDUCTORS AS REQUIRED FROM THE CONTROL PANEL TO THE SURGE TANK PRESSURE SWITCH.
17. 3/4" CONDUIT WITH (6) 14-AWG CONDUCTORS FROM CONTROL PANEL TO WATER STORAGE TANK. CONDUCTORS USED FOR CONTROL FLOATS.
18. FEEDER FOR WELL PUMP. PROVIDE (3)#8, #10 GND IN A 1" CONDUIT FROM THE CONTROL PANEL TO THE WELL HEAD. SPLICE TO PUMP SUPPLIER PROVIDED FLAT CABLE IN WELL-HEAD.
19. 3/4" PVC CONDUIT WITH (2) 14-AWG CONDUCTORS FROM CONTROL PANEL TO REMOTE ALARM IN SHOP BUILDING.
20. LOCATION OF SURGE TANKS.

Item No23: Sheet E2.1: The receptacles called out in keyed notes #13, 14, and 15 shall be 'all weather' labeled. The receptacles called out in keyed notes 13 and 15 shall be 208 volt, 1-phase, 60-amp. Coordinate with the owner supplied equipment for the final configuration.

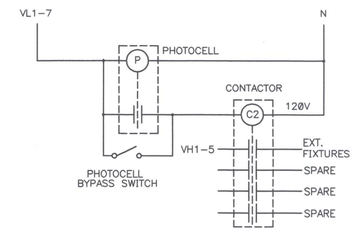

NOTES:

1. PHOTOCELL SHALL BE A TORK 2101. MOUNT ON ROOF AND ORIENT NORTH WARD.
2. THE CONTACTOR SHALL BE A SQUARE D CLASS 8903, ELECTRICALLY HELD OR EQUAL.

EXTERIOR LIGHTING CONTROL - VEHICLE STORAGE

SCALE: NONE

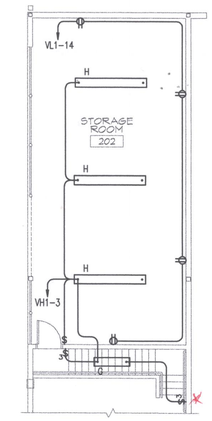

COVERED STORAGE - MEZZANINE

SCALE: 1/8" = 1'-0"

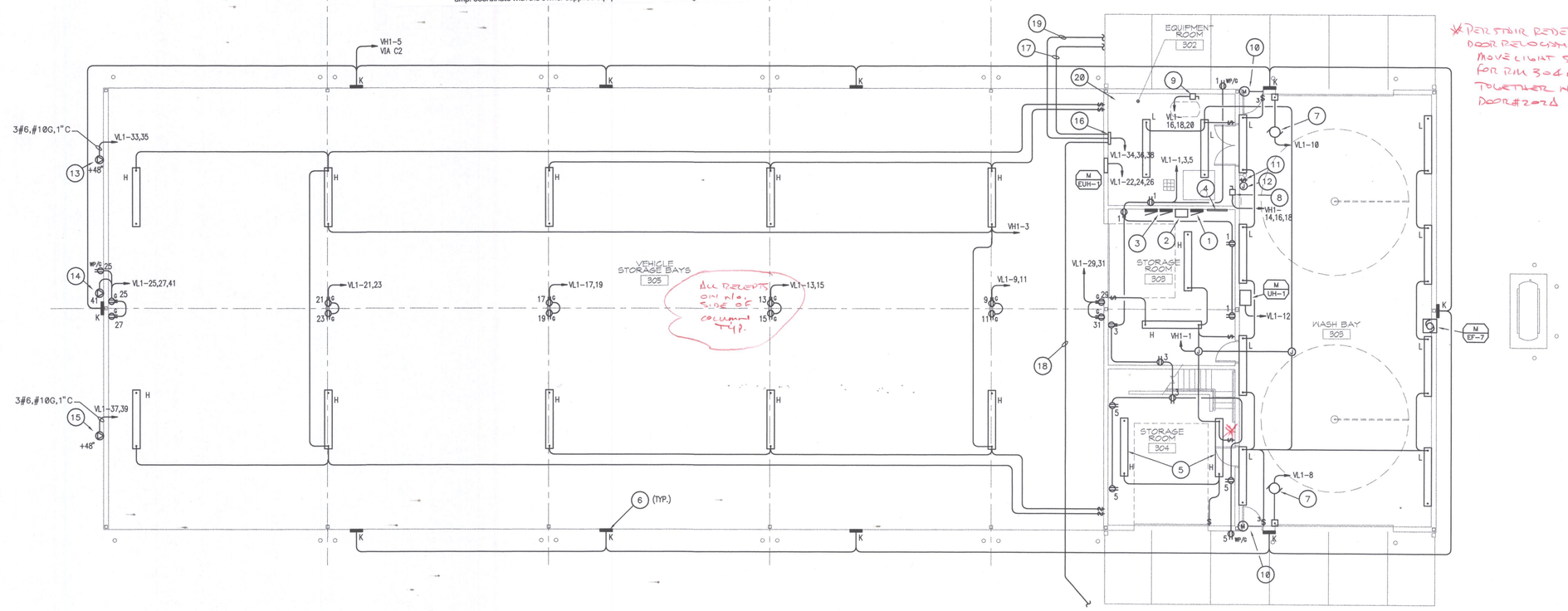

* PER STAIR REDESIGN! DOOR RELOCATION & MOVE LIGHT SWITCHES FOR RM 304 & STAIRS TOGETHER NEXT TO DOOR #207A

COVERED STORAGE FLOOR PLAN - LIGHTING/POWER/SYSTEMS

SCALE: 1/8" = 1'-0"

☐ See add'nl Dwg Item 21 on Sheet E1.2 about light fixtures.
☐ See add'nl Dwg Item 24 on Sheet E1.3 about devices

No.	DATE	BY
4		
3		
2		
1		

CONSULTANTS:
SUMMIT PROFESSIONAL ENGINEERING, LLC
22 W. INDIANA AVE, SUITE E
SPOKANE, WA 99205
PHONE: (509)323-1563
FAX: (509)323-1565

ZECK BUTLER ARCHITECTS PS
The Pavilion Center 421 W Riverside Suite 220 Spokane WA 99201 t 509 . 456 . 8236 f 509 . 747 . 0570
e www.zeckbutler.com

SHEET TITLE: COVERED STORAGE FLOOR PLAN - ELECTRICAL, DETAIL

PROJECT TITLE: QUINCY SHOP
GRANT COUNTY PUBLIC WORKS
EPHRATA, WASHINGTON

SEAL: DONALD RAY NIELSEN, STATE OF WASHINGTON, 36314, REGISTERED PROFESSIONAL ENGINEER
EXPIRES 09/16/05

DATE	09/02/04
DRAWN	DMK
CHECKED	DRN
PROJECT NUMBER	0415
DRAWING NO.	E2.1