GRANT COUNTY
PUBLIC WORKS DEPARTMENT

County Road Engineer
Ephrata (509) 754-6082

Sam Dart
Interim Assistant. Dir. of Public Works
Ephrata (509) 754-6082

Bob Bersanti
Design/Construction Engineer
Ephrata (509) 754-6082

Jason Collings, Supervisor
Solid Waste
Ephrata (509) 754-4319

Ed Lowry
Supervisor
Road District #1
Ephrata (509) 754-6586

Mike Detrolio, Supervisor
Road District #2
Moses Lake (509) 765-4172

John Brissey, Supervisor
Road District #3
Quincy (509) 787-2321

Andrew Booth, Supervisor
Bridges
Ephrata (509) 754-6082

CONTRACT PROVISIONS and PLANS

For Construction of:

STRATFORD ROAD RECONSTRUCTION PROJECT
CRP 17-06

Sealed Bids will be opened on
May 12, 2020
at
1:30 P.M.
at the Office of the
Board of County Commissioners
Commissioners Hearing Room
P.O. Box 37
35 C Street NW
Ephrata, Washington 98823

INFORMATIONAL COPY ONLY - NOT FOR BIDDING

GRANT COUNTY PUBLIC WORKS

CRP 17-06

STRATFORD ROAD RECONSTRUCTION PROJECT

NOTICE TO ALL PLANHOLDERS

Grant County Department of Public Works may be contacted to answer questions regarding these bid documents and to show this project to prospective bidders is:
Grant County Department of Public Works

124 Enterprise St. S.E.
Ephrata, WA. 98823
Phone: (509)754-6082 Fax (509)754-6087

Scott Yaeger P.E. P.E. 4-21-2020
County Road Engineer Date

INFORMATIONAL COPY ONLY - NOT FOR BIDDING

NOTICE TO CONTRACTORS

Sealed bids, plainly marked **"BID FOR STRATFORD ROAD RECONSTRUCTION PROJECT, CRP 17-06"**, will be received by Grant County at the Office of the Board of County Commissioners located in the County Courthouse, P.O. Box 37, 35 C Street NW – Room 206, Ephrata, WA, 98823, until **1:30 P.M., Tuesday, May 12, 2020** and will then and there be opened and publicly read for the construction of the improvements.

All bid proposals shall be accompanied by a bid proposal deposit in cash, certified check, cashier's check, or surety bond in an amount equal to five percent (5%) of the amount of such bid proposal. No conditional bid bond will be accepted. Should the successful bidder fail to enter into such contract and furnish a satisfactory performance bond within the time stated in the specifications, the bid proposal deposit shall be forfeited to Grant County.

Maps, plans and specifications may be purchased from the office of the County Engineer, 124 Enterprise St. S.E., Ephrata, WA 98823, upon payment of the amount of $25.00 (non-refundable).

Informational copies of the maps, plans and specifications are on file for inspection at the Grant County Public Works Building, 124 Enterprise St. S.E., Ephrata, WA 98823, and in various plan centers located in Washington.

The Board of County Commissioners of Grant County, Washington, reserves the right to reject any and all bids. The award of this contract, if made, will be to the lowest responsible bidder.

The improvement for which bids will be received follows:

STRATFORD ROAD RECONSTRUCTION PROJECT – CRP 17-06
This contract provides for the reconstruction of 4.03 miles of two lane county road in Grant County, WA, and includes roadway excavation, embankment compaction, crushed surfacing base course, crushed surfacing top course, guardrail, seeding and fertilizing, and other work all in accordance with the attached Contract Plans, these Contract Provisions and the Standard Specifications.

INFORMATIONAL COPY ONLY - NOT FOR BIDDING

BIDDER'S CHECK LIST

The bidder's attention is especially called to the following forms which must be executed in full as required:

(A) PROPOSAL

The unit prices bid must be shown in the spaces provided. Show unit prices in figures only. All extensions of the unit prices must be shown in the spaces provided.

(B) PROPOSAL SIGNATURE SHEET

To be filled in and signed by the bidder.

(C) STATEMENT OF CONTRACTOR QUALIFICATIONS

To be filled in and signed by the bidder.

(D) CERTIFICATION OF COMPLIANCE WITH WAGE PAYMENT STATUTES

To be filled in and signed by the bidder.

(E) BID BOND

This form is to be executed by the bidder and his surety company unless the bid is accompanied by cash, certified or cashier's check. The amount of this bond shall be equal to 5% of the total amount bid and may be shown in dollars or on a percentage basis.

(F) LOCAL AGENCY SUBCONTRACTOR LIST

To be filled in by the contractor.

The following forms are to be executed after the contract is awarded:

(G) CONTRACT

This agreement is to be executed by the successful bidder, his surety company, and Grant County.

(H) CONTRACT BOND

To be executed by the successful bidder and his surety company.

INFORMATIONAL COPY ONLY - NOT FOR BIDDING

TABLE OF CONTENTS

AMENDMENTS TO THE STANDARD SPECIFICATIONS **1**

SPECIAL PROVISIONS **43**

DIVISION 1 GENERAL REQUIREMENTS **44**

DIVISION 2 EARTHWORK **75**

DIVISION 4 BASES **77**

DIVISION 8 MISCELLANEOUS CONSTRUCTION **79**

DIVISION 9 MATERIALS **81**

Proposal ..... Proposal Page 1 - 10

Contract ..... Contract Page 1 -4

Appendices

Wage Rates-State
Plans
Standard Plans

INFORMATIONAL COPY ONLY - NOT FOR BIDDING

INTRODUCTION

The following Amendments and Special Provisions shall be used in conjunction with the 2018 Standard Specifications for Road, Bridge, and Municipal Construction.

AMENDMENTS TO THE STANDARD SPECIFICATIONS

The following Amendments to the Standard Specifications are made a part of this contract and supersede any conflicting provisions of the Standard Specifications. For informational purposes, the date following each Amendment title indicates the implementation date of the Amendment or the latest date of revision.

Each Amendment contains all current revisions to the applicable section of the Standard Specifications and may include references which do not apply to this particular project.

Section 1-01, Definitions and Terms
August 6, 2018

1-01.3 Definitions

The following new term and definition is inserted before the definition for "Shoulder":

Sensitive Area – Natural features, which may be previously altered by human activity, that are present on or adjacent to the project location and protected, managed, or regulated by local, tribal, state, or federal agencies.

The following new term and definition is inserted after the definition for "Working Drawings":

WSDOT Form – Forms developed and maintained by WSDOT that are required or available for use on a project. These forms can be downloaded from the forms catalogue at:

http://wsdot.wa.gov/forms/pdfForms.html

Section 1-02, Bid Procedures and Conditions
June 3, 2019

1-02.4(1) General

This section is supplemented with the following:

Prospective Bidders are advised that the Contracting Agency may include a partially completed Washington State Department of Ecology (Ecology) Transfer of Coverage (Ecology Form ECY 020-87a) for the Construction Stormwater General Permit (CSWGP) as part of the Bid Documents. When the Contracting Agency requires the transfer of coverage of the CSWGP to the Contractor, an informational copy of the Transfer of Coverage and the associated CSWGP will be included in the appendices. As a condition of Section 1-03.3, the Contractor is required to complete sections I, III, and VIII of the Transfer of Coverage and return the form to the Contracting Agency.

The Contracting Agency is responsible for compliance with the CSWGP until the end of day that the Contract is executed. Beginning on the day after the Contract is executed, the Contractor shall assume complete legal responsibility for compliance with the CSWGP and full implementation of all conditions of the CSWGP as they apply to the Contract Work.

INFORMATIONAL COPY ONLY - NOT FOR BIDDING

1-02.5 Proposal Forms

The first sentence of the first paragraph is revised to read:

> At the request of a Bidder, the Contracting Agency will provide a physical Proposal Form for any project on which the Bidder is eligible to Bid.

1-02.6 Preparation of Proposal

Item number 1 of the second paragraph is revised to read:

> 1. A unit price for each item (omitting digits more than two places to the right of the decimal point),

In the third sentence of the fourth paragraph, "WSDOT Form 422-031" is revised to read "WSDOT Form 422-031U".

The following new paragraph is inserted before the last paragraph:

> The Bidder shall submit with their Bid a completed Contractor Certification Wage Law Compliance form (WSDOT Form 272-009). Failure to return this certification as part of the Bid Proposal package will make this Bid Nonresponsive and ineligible for Award. A Contractor Certification of Wage Law Compliance form is included in the Proposal Forms.

1-02.13 Irregular Proposals

Item 1(h) is revised to read:

> h. The Bidder fails to submit Underutilized Disadvantaged Business Enterprise Good Faith Effort documentation, if applicable, as required in Section 1-02.6, or if the documentation that is submitted fails to demonstrate that a Good Faith Effort to meet the Condition of Award was made;

Item 1(i) is revised to read the following three items:

> i. The Bidder fails to submit a UDBE Bid Item Breakdown form, if applicable, as required in Section 1-02.6, or if the documentation that is submitted fails to meet the requirements of the Special Provisions;
>
> j. The Bidder fails to submit UDBE Trucking Credit Forms, if applicable, as required in Section 1-02.6, or if the documentation that is submitted fails to meet the requirements of the Special Provisions; or
>
> k. The Bid Proposal does not constitute a definite and unqualified offer to meet the material terms of the Bid invitation.

Section 1-03, Award and Execution of Contract
January 2, 2018

1-03.3 Execution of Contract

The first paragraph is revised to read:

> Within 20 calendar days after the Award date, the successful Bidder shall return the signed Contracting Agency-prepared Contract, an insurance certification as required by Section 1-07.18, a satisfactory bond as required by law and Section 1-03.4, the Transfer of Coverage

INFORMATIONAL COPY ONLY - NOT FOR BIDDING

form for the Construction Stormwater General Permit with sections I, III, and VIII completed when provided, and shall be registered as a contractor in the state of Washington.

1-03.5 Failure to Execute Contract

The first sentence is revised to read:

Failure to return the insurance certification and bond with the signed Contract as required in Section 1-03.3, or failure to provide Disadvantaged, Minority or Women's Business Enterprise information if required in the Contract, or failure or refusal to sign the Contract, or failure to register as a contractor in the state of Washington, or failure to return the completed Transfer of Coverage for the Construction Stormwater General Permit to the Contracting Agency when provided shall result in forfeiture of the proposal bond or deposit of this Bidder.

Section 1-05, Control of Work
August 6, 2018

1-05.5 Vacant

This section, including title, is revised to read:

1-05.5 Tolerances

Geometrical tolerances shall be measured from the points, lines, and surfaces defined in Contract documents.

A plus (+) tolerance increases the amount or dimension to which it applies, or raises a deviation from level. A minus (-) tolerance decreases the amount or dimension to which it applies, or lowers a deviation from level. Where only one signed tolerance is specified (+ or -), there is no specified tolerance in the opposing direction.

Tolerances shall not be cumulative. The most restrictive tolerance shall control.

Tolerances shall not extend the Work beyond the Right of Way or other legal boundaries identified in the Contract documents. If application of tolerances causes the extension of the Work beyond the Right of Way or legal boundaries, the tolerance shall be reduced for that specific instance.

Tolerances shall not violate other Contract requirements. If application of tolerances causes the Work to violate other Contract requirements, the tolerance shall be reduced for that specific instance. If application of tolerances causes conflicts with other components or aspects of the Work, the tolerance shall be reduced for that specific instance.

1-05.9 Equipment

The following new paragraph is inserted before the first paragraph:

Prior to mobilizing equipment on site, the Contractor shall thoroughly remove all loose dirt and vegetative debris from drive mechanisms, wheels, tires, tracks, buckets and undercarriage. The Engineer will reject equipment from the site until it returns clean.

This section is supplemented with the following:

Upon completion of the Work, the Contractor shall completely remove all loose dirt and vegetative debris from equipment before removing it from the job site.

INFORMATIONAL COPY ONLY - NOT FOR BIDDING

Section 1-06, Control of Material
January 7, 2019

1-06.1(3) Aggregate Source Approval (ASA) Database

This section is supplemented with the following:

Regardless of status of the source, whether listed or not listed in the ASA database the source owner may be asked to provide testing results for toxicity in accordance with Section 9-03.21(1).

1-06.2(2)D Quality Level Analysis

This section is supplemented with the following new subsection:

1-06.2(2)D5 Quality Level Calculation – HMA Compaction

The procedures for determining the quality level and pay factor for HMA compaction are as follows:

1. Determine the arithmetic mean, X_m, for compaction of the lot:

$$X_m = \frac{\sum x}{n}$$

Where:
x = individual compaction test values for each sublot in the lot.
$\sum x$ = summation of individual compaction test values
n = total number test values

2. Compute the sample standard deviation, "S", for each constituent:

$$S = \left[\frac{n\sum x^2 - (\sum x)^2}{n(n-1)} \right]^{\frac{1}{2}}$$

Where:
$\sum x^2$ = summation of the squares of individual compaction test values
$(\sum x)^2$ = summation of the individual compaction test values squared

3. Compute the lower quality index (Q_L):

$$Q_L = \frac{X_m - LSL}{S}$$

Where:
LSL = 92.0

4. Determine P_L (the percent within the lower Specification limit which corresponds to a given Q_L) from Table 1. For negative values of Q_L, P_L is equal to 100 minus the table P_L. If the value of Q_L does not correspond exactly to a figure in the table, use the next higher value.

5. Determine the quality level (the total percent within Specification limits):

INFORMATIONAL COPY ONLY - NOT FOR BIDDING

Quality Level = P_L

6. Using the quality level from step 5, determine the composite pay factor (CPF) from Table 2.

7. If the CPF determined from step 6 is 1.00 or greater: use that CPF for the compaction lot; however, the maximum HMA compaction CPF using an LSL = 92.0 shall be 1.05.

8. If the CPF from step 6 is not 1.00 or greater: repeat steps 3 through 6 using an LSL = 91.5. The value thus determined shall be the HMA compaction CPF for that lot; however, the maximum HMA compaction CPF using an LSL = 91.5 shall be 1.00.

1-06.2(2)D1 Quality Level Analysis

The following new sentence is inserted after the first sentence:

The quality level calculations for HMA compaction are completed using the formulas in Section 1-06.2(2)D5.

1-06.2(2)D4 Quality Level Calculation

The first paragraph (excluding the numbered list) is revised to read:

The procedures for determining the quality level and pay factors for a material, other than HMA compaction, are as follows:

1-06.6 Recycled Materials

The first three sentences of the second paragraph are revised to read:

The Contractor shall submit a Recycled Material Utilization Plan on WSDOT Form 350-075A within 30 calendar days after the Contract is executed. The plan shall provide the Contractor's anticipated usage of recycled concrete aggregates for meeting the requirements of these Specifications. The quantity of recycled concrete aggregate will be provided in tons and as a percentage of the Plan quantity for eligible material listed in Section 9-03.21(1)E Table on Maximum Allowable percent (By Weight) of Recycled Material.

The last paragraph is revised to read:

Within 30 calendar days after Physical Completion, the Contractor shall report the quantity of recycled concrete aggregates that were utilized in the construction of the project for each eligible item listed in Section 9-03.21(1)E. The Contractor's report shall be provided on WSDOT Form 350-075A, Recycled Materials Reporting.

1-06.6(1)A General

Item 1(a) in the second paragraph is revised to read:

a. The estimated costs for the Work for each material with 25 percent recycled concrete aggregate. The cost estimate shall include for each material a documented price quote from the supplier with the lowest total cost for the Work.

INFORMATIONAL COPY ONLY - NOT FOR BIDDING

Section 1-07, Legal Relations and Responsibilities to the Public
April 1, 2019

1-07.5 Environmental Regulations

This section is supplemented with the following new subsections:

1-07.5(5) U.S. Army Corps of Engineers

When temporary fills are permitted, the Contractor shall remove fills in their entirety and the affected areas returned to pre-construction elevations.

If a U.S. Army Corps of Engineers permit is noted in Section 1-07.6 of the Special Provisions, the Contractor shall retain a copy of the permit or the verification letter (in the case of a Nationwide Permit) on the worksite for the life of the Contract. The Contractor shall provide copies of the permit or verification letter to all subcontractors involved with the authorized work prior to their commencement of any work in waters of the U.S.

1-07.5(6) U.S. Fish/Wildlife Services and National Marine Fisheries Service

The Contracting Agency will provide fish exclusion and handling services if the Work dictates. However, if the Contractor discovers any fish stranded by the project and a Contracting Agency biologist is not available, they shall immediately release the fish into a flowing stream or open water.

1-07.5(1) General

The first sentence is deleted and replaced with the following:

No Work shall occur within areas under the jurisdiction of resource agencies unless authorized in the Contract.

The third paragraph is deleted.

1-07.5(2) State Department of Fish and Wildlife

This section is revised to read:

In doing the Work, the Contractor shall:

1. Not degrade water in a way that would harm fish, wildlife, or their habitat.
2. Not place materials below or remove them from the ordinary high water line except as may be specified in the Contract.
3. Not allow equipment to enter waters of the State except as specified in the Contract.
4. Revegetate in accordance with the Plans, unless the Special Provisions permit otherwise.
5. Prevent any fish-threatening silt buildup on the bed or bottom of any body of water.
6. Ensure continuous stream flow downstream of the Work area.
7. Dispose of any project debris by removal, burning, or placement above high-water flows.

INFORMATIONAL COPY ONLY - NOT FOR BIDDING

8. Immediately notify the Engineer and stop all work causing impacts, if at any time, as a result of project activities, fish are observed in distress or a fish kill occurs.

If the Work in (1) through (3) above differs little from what the Contract requires, the Contracting Agency will measure and pay for it at unit Contract prices. But if Contract items do not cover those areas, the Contracting Agency will pay pursuant to Section 1-09.4. Work in (4) through (8) above shall be incidental to Contract pay items.

1-07.5(3) State Department of Ecology

This section is revised to read:

In doing the Work, the Contractor shall:

1. Comply with Washington State Water Quality Standards.

2. Perform Work in such a manner that all materials and substances not specifically identified in the Contract documents to be placed in the water do not enter waters of the State, including wetlands. These include, but are not limited to, petroleum products, hydraulic fluid, fresh concrete, concrete wastewater, process wastewater, slurry materials and waste from shaft drilling, sediments, sediment-laden water, chemicals, paint, solvents, or other toxic or deleterious materials.

3. Use equipment that is free of external petroleum-based products.

4. Remove accumulations of soil and debris from drive mechanisms (wheels, tracks, tires) and undercarriage of equipment prior to using equipment below the ordinary high water line.

5. Clean loose dirt and debris from all materials placed below the ordinary high water line. No materials shall be placed below the ordinary high water line without the Engineer's concurrence.

6. When a violation of the Construction Stormwater General Permit (CSWGP) occurs, immediately notify the Engineer and fill out WSDOT Form 422-011, Contractor ECAP Report, and submit the form to the Engineer within 48 hours of the violation.

7. Once Physical Completion has been given, prepare a Notice of Termination (Ecology Form ECY 020-87) and submit the Notice of Termination electronically to the Engineer in a PDF format a minimum of 7 calendar days prior to submitting the Notice of Termination to Ecology.

8. Transfer the CSWGP coverage to the Contracting Agency when Physical Completion has been given and the Engineer has determined that the project site is not stabilized from erosion.

9. Submit copies of all correspondence with Ecology electronically to the Engineer in a PDF format within four calendar days.

1-07.5(4) Air Quality

This section is revised to read:

The Contractor shall comply with all regional clean air authority and/or State Department of Ecology rules and regulations.

INFORMATIONAL COPY ONLY - NOT FOR BIDDING

The air quality permit process may include additional State Environment Policy Act (SEPA) requirements. Contractors shall contact the appropriate regional air pollution control authority well in advance of beginning Work.

When the Work includes demolition or renovation of any existing facility or structure that contains Asbestos Containing Material (ACM) and/or Presumed Asbestos-Containing Material (PACM), the Contractor shall comply with the National Emission Standards for Hazardous Air Pollutants (NESHAP).

Any requirements included in Federal and State regulations regarding air quality that applies to the "owner or operator" shall be the responsibility of the Contractor.

1-07.7(1) General

The first sentence of the third paragraph is revised to read:

When the Contractor moves equipment or materials on or over Structures, culverts or pipes, the Contractor may operate equipment with only the load-limit restrictions in Section 1-07.7(2).

The first sentence of the last paragraph is revised to read:

Unit prices shall cover all costs for operating over Structures, culverts and pipes.

1-07.9(1) General

The last sentence of the sixth paragraph is revised to read:

Generally, the Contractor initiates the request by preparing standard form 1444 Request for Authorization of Additional Classification and Rate, available at https://www.dol.gov/whd/recovery/dbsurvey/conformance.htm, and submitting it to the Engineer for further action.

1-07.9(2) Posting Notices

The second sentence of the first paragraph (up until the colon) is revised to read:

The Contractor shall ensure the most current edition of the following are posted:

The revision dates are deleted from all items in the numbered list.

The following new items are inserted after item number 1:

2. **Mandatory Supplement to EEOC P/E-1** published by US Department of Labor. Post for projects with federal-aid funding.

3. **Pay Transparency Nondiscrimination Provision** published by US Department of Labor. Post for projects with federal-aid funding.

Item number 2 through 12 are renumbered to 4 through 14, respectively.

1-07.11(2) Contractual Requirements

In this section, "creed" is revised to read "religion".

Item numbers 1 through 9 are revised to read 2 through 10, respectively.

After the preceding Amendment is applied, the following new item number 1 is inserted:

INFORMATIONAL COPY ONLY - NOT FOR BIDDING

1. The Contractor shall maintain a Work site that is free of harassment, humiliation, fear, hostility and intimidation at all times. Behaviors that violate this requirement include but are not limited to:

   a. Persistent conduct that is offensive and unwelcome.

   b. Conduct that is considered to be hazing.

   c. Jokes about race, gender, or sexuality that are offensive.

   d. Unwelcome, unwanted, rude or offensive conduct or advances of a sexual nature which interferes with a person's ability to perform their job or creates an intimidating, hostile, or offensive work environment.

   e. Language or conduct that is offensive, threatening, intimidating or hostile based on race, gender, or sexual orientation.

   f. Repeating rumors about individuals in the Work Site that are considered to be harassing or harmful to the individual's reputation.

1-07.11(5) Sanctions

This section is supplemented with the following:

Immediately upon the Engineer's request, the Contractor shall remove from the Work site any employee engaging in behaviors that promote harassment, humiliation, fear or intimidation including but not limited to those described in these specifications.

1-07.11(6) Incorporation of Provisions

The first sentence is revised to read:

The Contractor shall include the provisions of Section 1-07.11(2) Contractual Requirements (1) through (5) and the Section 1-07.11(5) Sanctions in every subcontract including procurement of materials and leases of equipment.

1-07.15(1) Spill Prevention, Control, and Countermeasures Plan

The last sentence of the first paragraph is revised to read:

An SPCC Plan template and guidance information is available at http://www.wsdot.wa.gov/environment/technical/disciplines/hazardous-materials/spill-prevent-report.

1-07.16(2)A Wetland and Sensitive Area Protection

The first sentence of the first paragraph is revised to read:

Existing wetland and other sensitive areas, where shown in the Plans or designated by the Engineer, shall be saved and protected through the life of the Contract.

1-07.18 Public Liability and Property Damage Insurance

Item number 1 is supplemented with the following new sentence:

This policy shall be kept in force from the execution date of the Contract until the Physical Completion Date.

INFORMATIONAL COPY ONLY - NOT FOR BIDDING

Section 1-08, Prosecution and Progress

January 7, 2019

1-08.1 Subcontracting

The first sentence of the seventh paragraph is revised to read:

> All Work that is not performed by the Contractor will be considered as subcontracting except: (1) purchase of sand, gravel, crushed stone, crushed slag, batched concrete aggregates, ready-mix concrete, off-site fabricated structural steel, other off-site fabricated items, and any other materials supplied by established and recognized commercial plants; or (2) delivery of these materials to the Work site in vehicles owned or operated by such plants or by recognized independent or commercial hauling companies hired by those commercial plants.

The following new paragraph is inserted after the seventh paragraph:

> The Contractor shall not use businesses (material suppliers, vendors, subcontractors, etc.) with federal purchasing exclusions. Businesses with exclusions are identified using the System for Award Management web page at www.SAM.gov.

1-08.4 Prosecution of Work

The last sentence of Section 1-08.4 is revised to read:

> (April 6, 2020)
> No other work shall be performed on the site until the Contracting Agency has accepted the installation of high visibility fencing, as described in the Contract, and a COVID-19 Health and Safety Plan (CHSP) has been prepared in accordance with Section 1- 07.4(2) as supplemented in these specifications, **COVID-19 Health and Safety Plan (CHSP).**

1-08.5 Time for Completion

Item number 2 of the sixth paragraph is supplemented with the following:

f. A copy of the Notice of Termination sent to the Washington State Department of Ecology (Ecology); the elapse of 30 calendar days from the date of receipt of the Notice of Termination by Ecology; and no rejection of the Notice of Termination by Ecology. This requirement will not apply if the Construction Stormwater General Permit is transferred back to the Contracting Agency in accordance with Section 8-01.3(16).

1-08.7 Maintenance During Suspension

The fifth paragraph is revised to read:

> The Contractor shall protect and maintain all other Work in areas not used by traffic. All costs associated with protecting and maintaining such Work shall be the responsibility of the Contractor.

INFORMATIONAL COPY ONLY - NOT FOR BIDDING

Section 1-09, Measurement and Payment
August 6, 2018

1-09.2(1) General Requirements for Weighing Equipment

The last paragraph is supplemented with the following:

> When requested by the Engineer, the Contractor's representative shall collect the tickets throughout the day and provide them to the Engineer's designated receiver, not later than the end of shift, for reconciliation. Tickets for loads not verified as delivered will receive no pay.

1-09.2(2) Specific Requirements for Batching Scales

The last sentence of the first paragraph is revised to read:

> Batching scales used for concrete or hot mix asphalt shall not be used for batching other materials.

1-09.10 Payment for Surplus Processed Materials

The following sentence is inserted after the first sentence of the second paragraph:

> For Hot Mix Asphalt, the Plan quantity and quantity used will be adjusted for the quantity of Asphalt and quantity of RAP or other materials incorporated into the mix.

Section 2-01, Clearing, Grubbing, and Roadside Cleanup
April 1, 2019

2-01.2(3) Disposal Method No. 3 – Chipping

Item number 2 of the first paragraph is revised to read:

2. Chips shall be disposed outside of sensitive areas, and in areas that aren't in conflict with permanent Work.

Section 2-03, Roadway Excavation and Embankment
April 1, 2019

2-03.3(14)F Displacement of Unsuitable Foundation Materials

This section, including title, is revised to read:

> **2-03.3(14)F Vacant**

INFORMATIONAL COPY ONLY - NOT FOR BIDDING

Section 3-01, Production from Quarry and Pit Sites
April 2, 2018

3-01.1 Description

The first paragraph is revised to read:

> This Work shall consist of manufacturing and producing crushed and screened aggregates including pit run aggregates of the kind, quality, and grading specified for use in the construction of concrete, hot mix asphalt, crushed surfacing, maintenance rock, ballast, gravel base, gravel backfill, gravel borrow, riprap, and bituminous surface treatments of all descriptions.

Section 7-02, Culverts
April 2, 2018

7-02.2 Materials

In the first paragraph, the references to "Portland Cement" and "Aggregates for Portland Cement Concrete" are revised to read:

Cement	9-01
Aggregates for Concrete	9-03.1

7-02.3(6)A4 Excavation and Bedding Preparation

The first sentence of the third paragraph is revised to read:

> The bedding course shall be a 6-inch minimum thickness layer of culvert bedding material, defined as granular material either conforming to Section 9-03.12(3) or to AASHTO Grading No. 57 as specified in Section 9-03.1(4)C.

Section 7-08, General Pipe Installation Requirements
April 2, 2018

7-08.3(3) Backfilling

The fifth sentence of the fourth paragraph is revised to read:

> All compaction shall be in accordance with the Compaction Control Test of Section 2-03.3(14)D except in the case that 100% Recycled Concrete Aggregate is used.

The following new sentences are inserted after the fifth sentence of the fourth paragraph:

> When 100% Recycled Concrete Aggregate is used, the Contractor may submit a written request to use a test point evaluation for compaction acceptance. Test Point evaluation shall be performed in accordance with SOP 738.

INFORMATIONAL COPY ONLY - NOT FOR BIDDING

Section 8-02, Roadside Restoration
April 1, 2019

This section, including all subsections, is revised to read:

8-02.1 Description

This Work consists of preserving, maintaining, establishing and augmenting vegetation on the roadsides and within mitigation or sundry site areas. It includes vegetation preservation, weed and pest control, furnishing and placing topsoil, compost, and soil amendments, and furnishing and planting seed, sod and plants of all forms and container types. It includes performing plant establishment activities and soil bioengineering. Work shall be performed in accordance with these Specifications and as shown in the Plans or as designated by the Engineer.

Trees, whips, shrubs, ground covers, cuttings, live stakes, live poles, live branches, rhizomes, tubers, rootstock, and seedlings will hereinafter be referred to collectively as "plants" or "plant material". Grass, wildflowers, and other plant materials installed in seed form will hereinafter be referred to collectively as "seed".

8-02.2 Materials

Materials shall meet the requirements of the following sections:

Erosion Control and Roadside Planting	9-14
Water	9-25.2

Botanical identification and nomenclature of plant materials shall be based on descriptions by Hitchcock and Cronquist in "Flora of the Pacific Northwest". Botanical identification and nomenclature of plant material not found in "Flora" shall be based on Bailey in "Hortus Third" or superseding editions and amendments or as referenced in the Plans.

8-02.3 Construction Requirements

8-02.3(1) Responsibility During Construction

The Contractor shall prepare, install, and ensure adequate and proper care of all roadside seeded, planted, and lawn areas on the project until all plant establishment periods required by the Contract are complete or until Physical Completion of the project, whichever is last.

Adequate and proper care shall include, but is not limited to, keeping all plant material in a healthy, growing condition by watering, pruning, and other actions deemed necessary for plant health. This Work shall include keeping the project area free from insect infestation, weeds or unwanted vegetation, litter, and other debris along with retaining the finished grades and mulch in a neat uniform condition.

Existing desirable vegetation shall be saved and protected unless removal is required by the Contract or allowed by the Engineer.

The Contractor shall have sole responsibility for the maintenance and appearance of the roadside restoration.

8-02.3(2) Work Plans

Three Work Plan submittals exist under this Section:

INFORMATIONAL COPY ONLY - NOT FOR BIDDING

1. Roadside Work Plan: This plan is required when Work will disturb the roadside beyond 20 feet from the pavement or where trees or native vegetation will be removed, the Contractor shall submit a Type 2 Working Drawing.

2. Weed and Pest Control Plan: This plan is required when the proposal contains the item "Weed and Pest Control," and prior to application of any chemicals or weed control activities, the Contractor shall submit a Type 2 Working Drawing.

3. Plant Establishment Plan: This plan is required when the proposal contains the item "PSIPE__", and prior to completion of Initial Planting, the Contractor shall submit a Type 2 Working Drawing.

8-02.3(2)A Roadside Work Plan

The Roadside Work Plan shall define the expected impacts to the roadside and restoration resulting from Work necessary to meet all Contract requirements. The Contractor shall define how the roadside restoration Work included in the Contract will be phased and coordinated with project Work such as earthwork, staging, access, erosion and water pollution control, irrigation, etc. The Roadside Work Plan shall include the following:

1. <u>Limiting impacts to roadsides:</u>

   a. Limits of Work including locations of staging or parking.

   b. Means and methods for vegetation protection (in accordance with Section 1-07.16(2)).

   c. Locations outside of clearing limits where vegetation shall be removed to provide access routes or other needs to accomplish the Work.

   d. Plans for removal, preservation and stockpile of topsoil or other native materials, if outside of clearing and grubbing limits and within the project limits.

2. <u>Roadside Restoration:</u>

   a. Plan for propagation and procurement of plants, ground preparation for planting, and installation of plants.

   b. Means and methods to limit soil compaction where seeding and planting are to occur, such as steel plates, hog fuel access roads, wood mats for sensitive areas (including removal) and decompaction for unavoidable impacts.

   c. Plan and timing to incorporate or remove erosion control items.

3. <u>Lawn Installation:</u>

   a. Schedule for lawn installation work.

   b. Establishment and maintenance of lawns.

INFORMATIONAL COPY ONLY - NOT FOR BIDDING

8-02.3(2)B Weed and Pest Control Plan

The Weed and Pest Control Plan shall describe all weed and pest control needs for the project.

The plan shall be prepared and signed by a licensed Commercial Pest Control Operator or Consultant. The plan for control of weeds and pests on the Contract in accordance with Section 8-02.3(3) shall include the following:

1. Names of plan preparer and pesticide operators, including contact information. The Contractor shall furnish the Engineer evidence that all operators are licensed with appropriate endorsements, and that the pesticide used is registered for use by the Washington State Department of Agriculture.

2. Means and methods of weed control, including mechanical and/or chemical.

3. Schedule for weed control including re-entry times for pesticide application by pesticide type.

4. Proposed pesticide use in accordance with Section 8-02.3(3)A: name, application rate, and Safety Data Sheets of all proposed pesticides. Include a copy of the current product label for each pesticide to be used.

5. Plan to ensure worker safety until pesticide re-entry periods are met.

8-02.3(2)C Plant Establishment Plan

The Plant Establishment Plan shall describe activities necessary to ensure continued health and vigor of planted and seeded areas in accordance with the requirements of Sections 8-02.3(12) and 8-02.3(13). Should the plan become unworkable at any time during the first-year plant establishment, the Contractor shall submit a revised plan prior to proceeding with further Work. The Plant Establishment Plan shall include:

1. Proposed scheduling of joint inspection meetings, activities, materials, equipment to be utilized for the first-year plant establishment.

2. Proposed adaptive management activities to ensure successful establishment of seeded, sodded, and planted areas.

3. A contact person.

4. Management of the irrigation system, when applicable.

8-02.3(3) Weed and Pest Control

The Contractor shall control weed and pest species within the project limits using integrated pest management principles consisting of mechanical, biological, and chemical controls that are outlined in the Weed and Pest Control Plan or as designated by the Engineer. Controlling weeds consists of killing and removing weeds by chemical, mechanical, and hand methods.

8-02.3(3)A Chemical Pesticides

Chemical pesticides include, but are not restricted to, any substance or mixture of substances intended for preventing, destroying, repelling or mitigating any pest,

INFORMATIONAL COPY ONLY - NOT FOR BIDDING

including but not limited to, insecticides, herbicides, fungicides, adjuvants, and additives, including plant regulators, defoliants and desiccants. The Contractor shall apply chemical pesticides in accordance with the label recommendations, the Washington State Department of Ecology, local sensitive area ordinances, and Washington State Department of Agriculture laws and regulations. Only those pesticides listed in the table Herbicides Approved for Use on WSDOT Rights of Way and accepted as part of the Weed and Pest Control Plan or by written authorization from the Engineer may be used (www.wsdot.wa.gov/maintenance/roadside/herbicide_use.htm).

The applicator shall be licensed by the State of Washington as a Commercial Applicator or Commercial Operator, with additional endorsements as required by the Special Provisions or the proposed weed control plan. All chemical pesticides shall be delivered to the job site in the original containers, or if pre-mixed off-site, a certification of the components and formulation from the supplier is required. The licensed applicator or operator shall complete WSDOT Form 540-509, Commercial Pesticide Application Record, each day the pesticide is applied and furnish a copy to the Engineer by the following business day.

The Contractor shall ensure confinement of the chemicals within the designated areas. The use of spray chemical pesticides shall require the use of anti-drift and activating agents and a spray pattern indicator unless otherwise allowed by the Engineer.

The Contractor shall assume all responsibility for rendering any area unsatisfactory for planting by reason of chemical application. Damage to adjacent areas, either on or off the Highway Right of Way, shall be repaired to the satisfaction of the Engineer or the property owner at no additional cost to the Contracting Agency.

8-02.3(3)B Planting and Lawn Area Weed Control

Planting and lawn area weed control consists of controlling weeds and pests in planted and lawn areas shown in the Plans. This Work is included in the bid items for planting and lawn installation.

All planting and lawn areas shall be prepared so that they are weed and debris free at the time of planting and until completion of the project. The planting areas shall include the entire ground surface, regardless of cover, areas around plants, and those areas shown in the Plans.

Within planting or lawn areas, all species that are not shown in the Plans are unwanted and shall be controlled unless specifically allowed by the Engineer to remain.

Grass growing within the mulch ring of a plant, including grass applied in accordance with Sections 8-01.3(2)A1, 8-02.3(9) or 8-02.3(10), shall be considered a weed and shall be controlled on the project in accordance with the weed and pest control plan.

All applications of post-emergent herbicides shall be made while green and growing tissue is present. Residual herbicides shall not be used where rhizomatous species or perennial species are indicated.

Should unwanted vegetation reach the flowering and seed stage in violation of these Specifications, the Contractor shall physically remove and bag the seed

INFORMATIONAL COPY ONLY - NOT FOR BIDDING

heads prior to seed dispersion. All physically removed vegetation and seed heads shall be disposed of off-site at no cost to the Contracting Agency.

8-02.3(3)C Project Area Weed and Pest Control

The Contractor shall control weeds not otherwise covered in accordance with Section 8-02.3(3)B, in all areas within the project limits, including erosion control seeding areas and vegetation preservation areas, as designated by the Engineer.

When the Bid Item "Project Area Weed and Pest Control" is included in the Contract, the Contractor shall also control all weeds specified as noxious by the Washington State Department of Agriculture, the local Weed District, or the County Noxious Weed Control Board outside of planting areas within the project limits.

8-02.3(4) Topsoil

Topsoil shall not be worked or placed when the ground or topsoil is frozen, or excessively wet.

The Contractor shall protect topsoil stockpiled for project use to prevent erosion and weed growth. Weed growth on topsoil stockpile sites shall be immediately eliminated in accordance with the accepted Weed and Pest Control Plan and Section 8-02.3(3)C.

The subsoil where topsoil is to be placed shall be tilled to a depth of 1 foot or as specified in the Special Provisions or the Plans. Topsoil of the type specified shall be evenly spread over the specified areas to the depth shown in the Plans or as otherwise ordered by the Engineer. Topsoil depths greater than 6 inches shall be placed in lifts no more than 6 inches in depth. The first lift of topsoil shall be incorporated with sub-soil to a depth of 8 inches and subsequent lifts placed and lightly tamped between lifts. After the topsoil has been spread, all large clods, hard lumps, and rocks 2 inches in diameter and larger, and litter shall be raked up, removed, and disposed.

8-02.3(4)A Topsoil Type A

Topsoil Type A shall be as specified in the Special Provisions. The Contractor shall submit a certification by the supplier that the contents of the Topsoil meet the requirements in the Special Provisions.

8-02.3(4)B Topsoil Type B

Topsoil Type B shall be naturally occurring topsoil taken from within the project limits and shall meet the requirements of Section 9-14.1(2). Topsoil Type B shall be taken from areas shown in the Plans to the designated depth and stockpiled at locations that will not interfere with the construction of the project, and outside of sensitive areas, as allowed by the Engineer. A minimum of two weeks prior to excavation of Topsoil Type B, the Contractor shall pre-treat the vegetation on the designated Topsoil Type B areas according to the Weed and Pest Control Plan. Areas beyond the slope stakes shall be disturbed as little as possible in the above operations and under no circumstances shall Topsoil Type B be stockpiled within 10 feet of any existing tree or vegetation area designated to be saved and protected. The Contractor shall protect topsoil stockpile from weed infestation.

The Contractor shall set aside sufficient material to satisfy the needs of the project.

Upon completion of topsoil placement, the Contractor shall dispose of remaining stockpiled Topsoil Type B not required for use on the project at no additional expense to the Contracting Agency in accordance with Section 2-03.3(7)C.

INFORMATIONAL COPY ONLY - NOT FOR BIDDING

Should a shortage of Topsoil Type B occur, and the Contractor has wasted or otherwise disposed of topsoil material, the Contractor shall furnish Topsoil Type A or C at no additional expense to the Contracting Agency.

8-02.3(4)C Topsoil Type C

Topsoil Type C shall be naturally occurring topsoil obtained from a source provided by the Contractor outside of the Contracting Agency-owned Right of Way. Topsoil Type C shall meet the requirements of Sections 8-02.3(4)B and 9-14.1(3). The Contractor shall not begin removal of Topsoil Type C from the proposed source until the material has been allowed for use by the Engineer.

8-02.3(5) Roadside Seeding, Lawn and Planting Area Preparation

This Work includes preparing worked areas for the installation of all types of permanent erosion control planting. Work shall be conducted so the flow lines in drainage channels are maintained. Material displaced by the Contractor's operations that interferes with drainage shall be removed from the channel and disposed of as allowed by the Engineer.

8-02.3(5)A Seeding Area Preparation

The Contractor shall prepare roadside seeding areas as follows:

1. Remove all excess material, debris, stumps, and rocks greater than 3 inches in diameter from areas to be seeded. Dispose of removed materials offsite.

2. Prepare roadside seeding area to a weed free and bare condition.

3. Bring area to uniform grade and install topsoil, soil amendments, or compost as specified. Any slopes 3(H) to 1(V) or steeper shall not be tilled unless otherwise specified.

4. Compact to provide a reasonably firm but friable seedbed; tractor walk to uniformly cover the surface with longitudinal depressions at least 2 inches deep formed perpendicular to the natural flow of water on the slope. Condition the soil with sufficient water so the longitudinal depressions remain in the soil surface until completion of the seeding.

5. Seed and mulch within 2 days of preparation.

8-02.3(5)B Lawn Area Preparation

The Contractor shall prepare lawn areas as follows:

1. Prepare lawn area to a weed free and bare condition in accordance with Section 8-02.3(3)B.

2. Remove excess material, stumps, wood or rocks over 3 inches in diameter and remove from site.

3. Bring area to uniform grade and install topsoil or soil amendments in accordance with Section 8-02.3(4) and 8-02.3(6).

4. Till to an 8-inch depth, rake to a smooth even grade without low areas that trap water, and compact with a 50-pound roller. The finished grade of the soil shall be 1 inch below the top of all curbs, junction and valve boxes, walks, driveways, and other Structures.

INFORMATIONAL COPY ONLY - NOT FOR BIDDING

5. Seed or sod the area within two days of preparation.

8-02.3(5)C Planting Area Preparation

The Contractor shall prepare planting areas as follows:

1. Prepare planting area to a weed free and bare condition in accordance with Section 8-02.3(3)B.

2. Decompact soil to a depth of 18 inches where construction activities have taken place or where native soils are compacted.

3. Return soil to uniform grade even with surrounding areas, leaving no holes or mounds over 3 inches in depth or height.

4. Remove excess material, stumps, wood or rocks over 3 inches in diameter and remove from site.

5. Apply compost or other amendments as indicated in the plans and in accordance with Section 8-02.3(6).

6. Cultivate amendments to a depth of 12 inches to provide a reasonably firm but friable planting area. Do not till any slopes 3(H) to 1(V) or steeper.

7. Return soil to a uniform finished grade, 1 inch, or the specified depth of mulch plus 1 inch, below walks, curbs, junction and valve boxes, catch basins, and driveways, unless otherwise specified.

8. Begin planting and mulching the area within two days of final preparation.

8-02.3(6) Soil Amendments

The Contractor shall place soil amendments of the type, quality, and quantities specified where shown in the Plans or as specified in the Special Provisions. Areas receiving soil amendments shall be bare soil or vegetation free prior to application. All soil amendments shall be installed as shown in the Plans within 30 calendar days after delivery to the project site.

8-02.3(6)A Compost

Compost used for soil amendments shall be Fine Compost unless otherwise designated in the Plans. When compost blanket is used for temporary erosion control, the compost blanket may be incorporated into the soil immediately prior to planting when used as compost soil amendment. The area shall be prepared in accordance with Section 8-02.3(5) prior to placing compost.

8-02.3(6)B Fertilizers

The Contractor shall apply fertilizer in the form, mixture, and rate specified in the Special Provisions or as directed by the Engineer. Application procedures shall be in accordance with the manufacturer's recommendations unless otherwise specified in the Special Provisions.

The Contractor shall submit a guaranteed fertilizer analysis label for the selected product a minimum of one week prior to application for acceptance. Following the Engineer's acceptance, fertilizing of the accepted ground or vegetated surfaces shall begin immediately.

INFORMATIONAL COPY ONLY - NOT FOR BIDDING

In seeding and lawn areas to be fertilized, the fertilizer shall be applied concurrently with the seed. When fertilizer is hydraulically applied, the fertilizer shall be suitable for application with seeding as specified in Section 8-02.3(9)C. If hydroseeding, the fertilizer shall be placed in the hydroseeder tank no more than 1 hour prior to application.

Fertilizers for planting areas shall be applied concurrently with compost and applied prior to incorporation, unless tablet form fertilizer is specified. Where tablet form fertilizer is specified, fertilizer shall be applied concurrently with plant installation.

Fertilizer sprayed on signs or sign structures shall be removed the same day.

Areas not accessible by fertilizing equipment shall be fertilized by allowed hand methods.

Second Application: A second application of fertilizer shall be applied as specified in the Special Provisions at the locations designated in the Plans. The fertilizer shall be applied during the months of March, April, or May of the following year after the initial seeding, planting, or lawn installation. The fertilizer shall be dry granular pellets or pearls and applied in accordance with the manufacturer's recommendations or as specified in the Special Provisions.

8-02.3(7) Layout of Planting, Lawn and Seeding Areas

The Contractor shall lay out and prepare planting and lawn areas and receive the Engineer's acceptance of layout and preparation prior to any installation activities. The Contractor shall stake the location of all trees larger than 1-inch caliper and the perimeter of all planting areas for acceptance by the Engineer prior to any installation activities.

The Contractor shall locate all trees to be planted in mowable grass areas a minimum of 10 feet from the edge of planting areas, other trees, fence lines, and bottom of ditches unless otherwise specified.

Tree locations shown in the Plans shall be considered approximate unless shown with stationing and offset distance. In irrigated areas, trees shall be located so their trunk is a minimum of ⅓ of the spray radius away from the nearest sprinkler head.

Unless otherwise shown, planting areas located adjacent to Roadways shall begin 6 feet from the edge of shoulder on roadway fills and begin 5 feet up on the back slope from the bottom on roadway cut sections. Plants within planting areas shall be located such that mature branching pattern will not block sight distance, signs, or other traffic-related devices. No trees shall be placed where the mature canopy will grow to within 10 feet of existing power lines. Where roadside ditches are present, planting areas shall begin 5 feet from the centerline of the ditch unless shown otherwise in the Plans.

8-02.3(8) Planting

8-02.3(8)A Dates and Conditions for Planting

No plant material shall be planted until it has been inspected and accepted for planting by the Engineer. Rejected material shall be removed from the project site immediately. All plants for the project or a sufficient quantity to plant 1-acre of the site, whichever is less, shall be received on site prior to the Engineer beginning inspection of the plants.

INFORMATIONAL COPY ONLY - NOT FOR BIDDING

Under no circumstances will planting be permitted during unsuitable soil or weather conditions as determined by the Engineer. Unsuitable conditions may include frozen soil, freezing weather, saturated soil, standing water, high winds, heavy rains, and high water levels. The ground shall be moist at the time of planting. All planting shall be accomplished during the following periods:

1. Non-Irrigated Plant Material
   Western Washington (West of the Cascade Mountain Crest) – October 1 to March 1.
   Eastern Washington (East of the Cascade Mountain Crest) – October 1 to November 15.

2. Irrigated Plant Material

In irrigated areas, plant material shall not be installed until the irrigation system is fully operational and accepted by the Engineer. Trees and shrubs may be planted in irrigated areas during the non-irrigated planting window before the irrigation system is functional with the written concurrence of the Engineer only if the irrigation system is guaranteed to be operational prior to the end of the non-irrigated planting window.

8-02.3(8)B Plant Installation

The Contractor shall handle plant material in the following manner:

1. Root systems shall be kept covered and damp at all times. Plant material shall be kept in containers until the time of planting.

2. Roots shall not be bunched, curled, twisted, or unreasonably bent when placed in the planting hole. Bare root plant material shall be dormant at the time of harvesting and planting. The root systems of all bare root plant material shall be dipped in a slurry immediately prior to planting.

3. Plant material supplied in wrapped balls shall not be removed from the wrapping until the time of planting at the planting location. The root system of balled plant material shall be moist at the time of planting. Root balls shall be loosened prior to planting. All burlap, baskets, string, wire and other such materials shall be removed from the hole when planting balled plants.

4. Plant cutting material shall be dormant at the time of cutting and planting. All cuttings shall be installed immediately if buds begin to swell.

5. Plants shall be placed with the crown at the finished grade. In their final position, plants shall have their top true root (not adventitious root) no more than 1 inch below the soil surface, no matter where that root was located in the original root ball or container. The backfill material, including container and root ball soil, shall be thoroughly watered on the same day that planting occurs regardless of season.

When installing plants, the Contractor shall dig planting holes three times the diameter of the container or root ball size. Any glazed surface of the planting hole shall be roughened prior to planting.

INFORMATIONAL COPY ONLY - NOT FOR BIDDING

8-02.3(8)C Pruning, Staking, Guying, and Wrapping

Plants shall be pruned at the time of planting, only to remove minor broken or damaged twigs, branches or roots. Pruning shall be performed with a sharp tool and shall be done in such a manner as to retain or to encourage natural growth characteristics of the plants. All other pruning shall be performed only after the plants have been in the ground at least 1 year and when plants are dormant.

Trees shall only be staked when so noted in the Plans. Each tree shall be staked or guyed before completion of the backfilling in accordance with the details shown in the Plans.

Trees shall be wrapped when so noted in the Plans.

8-02.3(9) Seeding, Fertilizing, and Mulching

For all seed, the Contractor shall furnish the following documentation to the Engineer:

1. The state or provincial seed dealer license and endorsements.

2. Copies of Washington State Department of Agriculture (WSDA) test results on each lot of seed. Test results shall be within six months prior to the date of application.

8-02.3(9)A Dates for Application of Seed

Unless otherwise allowed by the Engineer, the Contractor shall apply seed for permanent erosion control during the following periods:

Western Washington[1] (West of the Cascade Mountain Crest)	Eastern Washington (East of the Cascade Mountain Crest)
March 1 through May 15 September 1 through October 1	October 1 through November 15
[1]Seeding may be allowed outside these dates when allowed by the Engineer.	

All roadway excavation and embankment ground surfaces that are completed to final grades shall be prepared and seeded during the first available seeding window. When environmental conditions are not conducive to satisfactory results, the Engineer may suspend the seeding Work until such time that the desired results are likely to be obtained. If seeding is suspended, temporary erosion control methods according to Section 8-01 shall be used to protect the bare soil until seeding conditions improve.

8-02.3(9)B Seeding and Fertilizing

The Contractor shall prepare the seeding area in accordance with Section 8-02.3(5)A and apply seed at the rate and mix specified in the Special Provisions. The Contractor shall notify the Engineer within 5 days in advance of any seeding operation and shall not begin the Work until areas prepared or designated for seeding have been accepted. Following the Engineer's acceptance, seeding of the accepted ground surfaces shall begin immediately.

Seeding shall not be done during windy weather or when the ground is frozen, or excessively wet.

INFORMATIONAL COPY ONLY - NOT FOR BIDDING

When seeding by hand, the seed shall be incorporated into the top ¼ inch of soil by hand raking or other method that is allowed by the Engineer.

Seed applied as a separate operation using a hydroseeder shall have a tracer added to visibly aid uniform application. The tracer shall be HECP Short-Term Mulch applied at a rate of 200 to 250 pounds per acre and the tracer shall carry the measured specified seeding rate.

8-02.3(9)C Seeding with Fertilizers and Mulches

When the Proposal includes any variation of seeding, fertilizing, and without mulching, the seed and fertilizer shall be applied in one application followed by mulching. West of the Cascade Mountains, seed, fertilizer, and mulch may be completely applied in one application. East of the Cascades, seeding, fertilizing, and mulching shall not be applied as a single application unless allowed by the Engineer in writing prior to application. The fertilizing and mulching shall meet the requirements of Sections 8-02.3(6) and 8-02.3(11).

8-02.3(9)D Inspection

Seeded areas will be inspected upon completion of seeding, fertilizing, and mulching. The Work in any area will not be measured for payment until a uniform distribution of the materials is accomplished at the specified rate. Areas that have not received a uniform application of seed, fertilizer, and mulch at the specified rate, as determined by the Engineer, shall be re-seeded, re-fertilized, or re-mulched prior to payment for seeding within a designated area.

8-02.3(9)E Protection and Care of Seeded Areas

The Contractor shall install and establish a stable and weed free stand of grass as specified within all designated permanent seeding areas. A stable stand of grass shall meet the following requirements:

1. A dense and uniform canopy cover, 70% for Western Washington and 50% for Eastern Washington, of specified species covers all seeded areas after 3 months of active growth following germination during the growing season. Canopy cover is defined as the cover of living and vigorous grass blades, leaves, and shoots of specified species. Volunteer species, weeds, woody plants, or other undesirable vegetation shall not factor into the canopy cover. Growth and establishment may require supplemental irrigation to meet cover requirements.

2. Stand health is evident by vigorously growing planted species having a uniform rich-green appearance and with no dead patches or major gaps of growth. A stand of grass that displays rusting, wilting, stunted growth, disease, yellowing or browning of leaves, or bare patches does not meet the stand health requirement.

3. The Contractor shall establish a stable stand of grass free of all weeds, non-specified grasses, and other undesirable vegetation. Weed control shall be in accordance with the Weed and Pest Control Plan and occur on a monthly basis during the establishment period and through the life of the Contract.

4. Remove all trash, rocks, construction debris, and other obstructions that may be detrimental to the continued establishment of future seeding.

INFORMATIONAL COPY ONLY - NOT FOR BIDDING

In addition to the requirements of Section 1-07.13(1), restoration of eroded areas including clean up, removal, and proper disposal of eroded material, filling and raking of eroded areas with Topsoil Type A or fine compost, and re-application of the specified seed, fertilizer, and mulch shall occur at no additional cost to the Contracting Agency.

8-02.3(10) Lawn Installation

8-02.3(10)A Dates and Conditions for Lawn Installation

In irrigated areas, lawn installation shall not begin until the irrigation system is fully operational.

Unless otherwise allowed by the Engineer, seeded lawn installation shall be performed during the following time periods at the location shown:

Western Washington (West of the Cascade Mountain Crest)	Eastern Washington (East of the Cascade Mountain Crest)
March 1 through May 15 September 1 through October 1	October 1 through November 15
When irrigation system is operational March 1 through October 1	When irrigation system is operational March 1 through November 1

8-02.3(10)B Lawn Seeding and Sodding

The Contractor shall prepare the lawn area in accordance with Section 8-02.3(5) and apply seed at the mix and rate of application as specified in the Special Provisions.

The Contractor shall have the option of sodding in lieu of seeding for lawn installation at no additional expense to the Contracting Agency. Seeding in lieu of sodding will not be allowed.

Seed placed by hand shall be raked into the soil. Following raking, the seeded soil shall be rolled with a smooth 50-pound roller. Sod strips shall be placed within 48 hours of being cut. Placement shall be without voids and have the end joints staggered. Following placement, the sod shall be rolled with a smooth roller to establish contact with the soil.

Barriers shall be erected, with warning signs where necessary, to preclude pedestrian traffic access to the newly placed lawn during the establishment period.

8-02.3(10)C Lawn Establishment

Lawn establishment shall consist of caring for all new lawn areas within the limits of the project.

The lawn establishment period shall begin immediately after the lawn seeding or sodding has been accepted by the Engineer and shall extend to the end of four mowings or 20 working days whichever is longer. The mowings shall be done in accordance with Section 8-02.3(10)D.

During the lawn establishment period, the Contractor shall ensure the continuing healthy growth of the turf. This care shall include keeping the project in a presentable condition including, but not limited to, removal of litter, mowing, trimming, removal of grass clippings, edging, fertilization, insecticide and fungicide

INFORMATIONAL COPY ONLY - NOT FOR BIDDING

applications, weed control, watering, repairing the irrigation system, and repair and reseeding all damaged areas.

Temporary barriers shall be removed only when directed by the Engineer.

All Work performed under lawn establishment shall comply with established turf management practices.

Acceptance of lawn planting as specified will be based on a uniform stand of grass and a uniform grade at the time of final inspection. The Contractor shall recultivate, re-grade, reseed, and refertilize areas that are bare or have a poor stand of grass or not having a uniform grade through any cause before final inspection at no additional cost to the Contracting Agency.

8-02.3(10)D Lawn Mowing

Lawn mowing shall begin immediately after the lawn establishment period has been accepted by the Engineer and shall extend to the end of the Contract or the first-year plant establishment, whichever is last.

The Contractor shall accomplish the following minimum requirements:

1. Mow, trim, and edge as often as conditions dictate, at a minimum, once per week between April and September. Maximum height of lawn shall not exceed 3 inches. The cutting height shall be 2 inches. Cuttings, trimmings, and edgings shall be disposed of off the project site. When the Engineer allows the use of a mulching mower, trimmings may be left in place.

2. Water as often as conditions dictate depending on weather and soil conditions.

3. Provide fertilizer, weed control, water, and other measures as necessary to establish and maintain a healthy stand of grass.

8-02.3(11) Mulch

Mulches associated with seeding and planting shall be of the type specified in the Special Provisions or as indicated in the Plans. The Contractor shall evenly apply mulch at the rates indicated in the Plans. Mulches shall not be placed below the anticipated water level of ditch slopes, pond bank slopes, and stream banks, or in areas of standing or flowing water.

8-02.3(11)A Mulch for Seeding Areas

The Contractor shall furnish and evenly apply Hydraulically Applied Erosion Control Product (HECP) Long Term Mulch at the rates indicated and in accordance with the Manufacturer's specifications unless otherwise specified.

HECP Long Term Mulch shall be hydraulically applied at the rate of 3500 pounds per acre with no more than 2000 pounds applied in any single lift. HECP mulch shall not be used within the Ordinary High Water Mark.

Mulch sprayed on signs or sign Structures shall be removed the same day.

Areas not accessible by mulching equipment shall be mulched by accepted hand methods.

INFORMATIONAL COPY ONLY - NOT FOR BIDDING

HECP Long Term Mulch may be applied with seed and fertilizer west of the summit of the Cascade Range. East of the summit of the Cascade Range, seed and fertilizer shall be applied in a single application followed by the application of mulch.

8-02.3(11)B Bark or Woodchip Mulch

The Contractor shall apply bark or wood chip mulch of the type and depth specified where shown in the Plans or as specified in the Special Provisions.

The Contractor shall complete final grading and placement/incorporation of soil amendments within the planting area prior to placement of mulch. Areas receiving bark mulch shall be bare soil or vegetation free before application, except where trees and other plants are specifically identified in the Plans or designated by the Engineer to be saved and protected.

Bark or wood chip mulch shall be placed to a uniform non-compacted depth of 3 inches over all planting areas unless otherwise specified. Mulch shall be feathered to the base of the plant and 1 inch below the top of junction and valve boxes, curbs, and pavement edges.

Any contamination of the mulch due to the Contractor's operations shall be corrected to its former condition at no additional cost to the Contracting Agency. Mulch placed to a thickness greater than specified shall be at no additional cost to the Contracting Agency.

The Contractor shall keep plant material crowns, runners, and branches free of mulch at all times.

8-02.3(11)C Bark or Woodchip Mulch Rings

The Contractor shall apply mulch rings around plants installed within existing vegetation areas or within seeded areas as shown in the Plans. Bark or wood chip mulch rings shall be applied to the surface of vegetation free amended soil in the isolated plant locations where shown in the Plans or as specified in the Special Provisions. Bark or wood chip mulch shall be placed to a uniform non-compacted depth of 3 inches to a radius of 2 feet around all plants within interplanted plant locations.

8-02.3(12) Completion of Initial Planting

Upon completion of the initial planting within a designated area, the Engineer will make an inspection of all planting areas. The Engineer will notify the Contractor, in writing, of any replacements or corrective action necessary to meet the plant installation requirements. The Contractor shall replace all plants and associated materials rejected or missing and correct unsatisfactory conditions.

Completion of the initial planting within a designated area includes the following conditions:

1. 100 percent of each of the plant material categories are installed as shown in the Plans.

2. Planting Area is cleaned up.

3. Repairs are completed, including but not limited to, full operation of the irrigation system.

INFORMATIONAL COPY ONLY - NOT FOR BIDDING

4. Mulch coverage is complete.

5. All weeds are controlled.

8-02.3(13) Plant Establishment

Plant establishment consists of caring for all plants and planting areas within the project limits. The provisions of Sections 1-07.13(2) and 1-07.13(3) do not apply to this Section.

When the Proposal includes the bid item PSIPE____ (Plant Selection Including Plant Establishment), that bid item includes one year of plant establishment Work. The first year of plant establishment shall begin immediately upon written notification from the Engineer of the completion of initial planting for the project. The first-year plant establishment period shall be a minimum of one calendar year. The one calendar year shall be extended an amount equal to any periods where the Contractor does not comply with the plant establishment requirements and plan.

During the first-year plant establishment period, the Contractor shall perform all Work necessary to ensure the resumption and continued growth of the transplanted material. This Work shall include, but is not limited to, applying water, removing foreign, dead, or rejected plant material, maintaining all planting areas in a weed-free condition, and replacing all unsatisfactory plant material planted under the Contract. If plants are stolen or damaged by the acts of others, the Contracting Agency will pay invoice cost only for the replacement plants with no mark-up and the Contractor will be responsible for the labor to install the replacement plants. Other weed control within the project limits but outside of planting, lawn, or seeding areas shall be as specified in Section 8-02.3(3)C.

During the first year of plant establishment, the Contractor shall meet monthly or at an agreed upon schedule with the Engineer for the purpose of joint inspection of the planting material. The Contractor shall correct all unsatisfactory conditions identified by the Engineer within a 10-day period immediately following the inspection. If plant replacement is required, the Contractor shall, within the 10-day period, submit a plan and schedule for the plant procurement and replacement to occur during the planting period as designated in Section 8-02.3(8). At the end of the plant establishment period, plants that do not show normal growth shall be replaced and all staking and guying that remain on the project shall be removed unless otherwise allowed by the Engineer.

All automatic irrigation systems shall be operated fully automatic during the plant establishment period and until final acceptance of the Contract. Payment for water used to water in plants, or hand watering of plant material or lawn areas unless otherwise specified, is the responsibility of the Contractor during the first-year plant establishment period.

Subsequent year plant establishment periods shall begin immediately at the completion of the preceding year's plant establishment period. Each subsequent plant establishment period shall be one full calendar year in duration.

During the plant establishment period(s) after the first year plant establishment, the Work necessary for the continued healthy and vigorous growth of all plants material shall be performed as directed by the Engineer.

Payment for water used to water plants during the subsequent year(s) of plant establishment will be paid under the plant establishment item.

INFORMATIONAL COPY ONLY - NOT FOR BIDDING

8-02.3(14) Plant Replacement

The Contractor shall be responsible for growing or arrange to provide sufficient plants for replacement of all plant material rejected through first-year plant establishment. All replacement plant material shall be inspected and accepted by the Engineer prior to installation. All rejected plant material shall be replaced with acceptable plants meeting the specifications and installed according to the requirements of this Section at dates allowed by the Engineer.

All replacement plants shall be of the same species as the plants they replace and meet the requirements of Section 9-14.8 unless otherwise allowed by the Engineer. Plants may vary in size reflecting one season of growth should the Contractor elect to hold plant material under nursery conditions for an additional year to serve as replacement plants. Replacement plant material larger than specified in the Plans shall meet the applicable section requirements of the ASNS for container class, ball size, spread, and branching characteristics.

8-02.3(15) Bioengineering

Bioengineering consists of using plant materials for the purpose of streambank or earthen slope construction and surface stabilization. This Work may include installing woody plant cuttings in various forms as well as part of streambank or earthen slope construction.

8-02.3(15)A Fascines

Live fascines shall be constructed of live and dead cuttings bundled together with a diameter of 8 to 18 inches. Live cuttings shall be the species shown in the Plans. Dead branches may be cuttings from any woody, non-invasive plant native to the project area. Dead branches may be placed within the live fascine and on the side exposed to the air. Live branches shall be placed in contact with the soil along their entire length. Each live fascine must contain a minimum of eight live branches. Dead branches shall constitute no more than 40 percent of the total fascine content.

The total length of each live fascine shall be a minimum of 5 feet. Branches shall be bundled into log-like forms and bound with biodegradable twine spaced at 1-foot intervals along the entire length of the live fascine. Live fascines shall be installed horizontally in a trench whose depth shall be ½ the diameter of the live fascine. Secure the live fascine with live stakes 3 feet in length and ¾ inch in diameter placed at 18-inch intervals. A minimum of three live stakes shall be used per fascine. The live stakes shall be driven through the live fascine vertically into the slope. The ends of live fascines shall be woven together so that no gap remains between the two sections of the live fascine.

Prior to being covered with soil, the fascine shall be thoroughly watered. Once the fascine is covered with 6 inches of soil, the soil covering the fascine shall be thoroughly watered.

When used to remedy erosion areas, live fascines shall extend a minimum of two feet beyond the visible area of erosion and soil disturbance. The locations for live fascines and live stake rows shall be identified in the field for review and acceptance by the Engineer. The Engineer may require adjustment of fascine locations prior to installation in order to best accomplish the intended functions.

Plant replacement during plant establishment for "PSIPE Live Fascine" will be required for any section void of live shoots for a length of 3 feet or more. Replacement shall consist of installing live stakes, spaced 1 foot apart above the

INFORMATIONAL COPY ONLY - NOT FOR BIDDING

fascine within the area void of live shoots. Live stakes shall be of the same species as the live fascine and shall have a minimum length of 3 feet and a minimum diameter of ¾ inch. The requirements of Section 8-02.3(8) apply to PSIPE Live Fascine.

8-02.3(15)B Brush Mattress

Live brush mattress shall be constructed of live branch cuttings, live poles, jute rope and topsoil. The live cuttings and live poles shall be from the plant species designated in the Plans. Live branch cuttings shall be placed with the cut ends oriented down slope as shown in the Plans. Cuttings shall overlap from side to side and from top to bottom as each layer is constructed. The live branches in each succeeding upper layer shall overlap the adjacent lower layer by a minimum of 6 inches. A maximum of 20 percent of the branches may be dead branches, but the live branches shall be distributed evenly to provide even rooting and growth over the entire area of the brush mattress.

The Contractor shall anchor the live brush mattress to the slope using stakes and jute rope as shown in the Plans. Initially, the stakes shall be installed to protrude above the live brush mattress. The Contractor shall attach the jute rope to the stakes and tighten the rope by tamping the stakes further into the bank, pulling the live brush mattress tight against the soil surface. The Contractor shall cover the live brush mattress with sufficient stockpiled topsoil to ensure good soil contact with the live plant material.

Plant replacement during plant establishment for "PSIPE Live Brush Mattress" will be required for any section void of live shoots for an area of 25 square feet or more. Replacement shall consist of installing live stakes, spaced 3 feet apart in a triangular pattern within the area void of live shoots. Live stakes shall be of the same species as the live brush mattress and shall have a minimum length of 3 feet and a minimum diameter of ¾ inch. The requirements of Section 8-02.3(8) apply to PSIPE Brush Mattress.

8-02.3(15)C Brush Layer

Brush layers shall be constructed of live branch cuttings, randomly mixed, from the plant species listed under the brush layer heading in the Plans. The number of branches required will vary depending on the average branch diameter and layer thickness.

Brush layers shall be placed in a trench dug at a 45 degree incline into the slope or stream bank. Two-thirds to three-fourths of the length of the live branches shall be buried. Soil shall be firmly tamped in place. Succeeding layers shall be spaced as detailed in the Plans. Brush layer placed in stream banks shall be angled downstream.

Brush layers may include plant establishment when designated as PSIPE Brush Layer. Plant replacement for PSIPE Brush Layer will be required for each section void of live shoots for a continuous distance of 3 feet or more. The requirements of Section 8-02.3(8) apply to PSIPE Brush Layer.

8-02.3(16) Roadside Maintenance Under Construction

When the Contract includes the item, Roadside Maintenance Under Construction, this Work includes roadside mowing and ditch maintenance, and noxious weed control outside of planting areas according to Section 8-02.3(3)C.

INFORMATIONAL COPY ONLY - NOT FOR BIDDING

8-02.3(16)A Roadside Mowing

The Contractor shall mow designated roadside grass areas to the limits designated by the Engineer. Roadside mowing is limited to slopes not steeper than 3(H) to 1(V).

The Contractor shall mow according to the following requirements:

1. Trim around traffic equipment, structures, planting areas, or other features extending above ground preceding or simultaneously with each mowing.

2. Maintain grass between 4 and 12 inches in height.

3. Operate mowing equipment with suitable guards to prevent throwing rocks or debris onto the traveled way or off of the Contracting Agency property. Power driven equipment shall not cause ruts, deformation, and compaction of the vegetated soil.

4. Removing clippings is required on the traveled way, shoulders, walkways, or Structures.

5. Restore soil rutting to a smooth and even grade at the direction of the Engineer.

8-02.3(16)B Ditch Maintenance

The Contractor shall maintain drainage for the duration of the Contract according to the following requirements:

1. Maintain flow lines in drainage channels and roadside ditches.

2. Cutting or trimming vegetation within drainage channels to maintain positive flow.

3. Remove dirt and debris from inside of culverts or any drainage area where runoff has allowed accumulations and re-seed for erosion control.

4. Restore channels to previous operational condition.

8-02.4 Measurement

Topsoil, bark or woodchip mulch and soil amendments will be measured by the acre or the square yard along the grade and slope of the area covered immediately after placement. Weed control pre-treatment of topsoil areas, excavation, and stockpiling are included in the bid item "Topsoil Type ___.

Bark or woodchip mulch rings will be measured per each.

Compost will be measured by the acre or the square yard along the grade and slope of the area covered immediately after application.

Seeding, fertilizing, and mulching will be measured by the acre or the square yard by ground slope measurement or through the use of design data.

Seeding and fertilizing by hand will be measured by the square yard. No adjustment in area size will be made for the vegetation free zone around each plant.

INFORMATIONAL COPY ONLY - NOT FOR BIDDING

Seeded lawn, sod installation, and lawn mowing will be measured along the ground slope and computed in square yards of actual lawn completed, established, and accepted.

Plant selection will be measured per each.

PSIPE __ (Plant Selection Including Plant Establishment) will be measured per each.

Live Pole will be measured per each.

Live Stake Row will be measured by the linear foot along the ground slope line.

The pay quantities for plant materials will be determined by count of the number of satisfactory plants in each category accepted by the Engineer.

Fascine and PSIPE live fascine will be measured by the linear foot along the ground slope line.

Brush mattress and PSIPE live brush mattress will be measured by the surface square yard along the ground slope line.

Brush layer and PSIPE brush layer will be measured by the linear foot along the ground slope line.

Water will be measured in accordance with Section 2-07.4. Measurement will be made of only that water hauled in tank trucks or similar equipment.

8-02.5 Payment

Payment will be made for each of the following listed Bid items that are included in the Proposal:

"Project Area Weed and Pest Control" will be paid in accordance with Section 1-09.6. For the purpose of providing a common Proposal for all Bidders, the Contracting Agency entered an amount for "Project Area Weed and Pest Control" in the Proposal to become a part of the total Bid by the Contractor. Payment under this item will be made only when the Work is not already covered by other items.

"Topsoil Type____", per acre.
The unit Contract price per acre for "Topsoil Type ____" shall be full payment for all costs for the specified Work.

"Fine Compost ", per acre or per square yard.
"Medium Compost", per acre or per square yard.
"Coarse Compost", per acre or per square yard.
The unit Contract price per acre for "Fine Compost", "Medium Compost" or "Coarse Compost" shall be full pay for furnishing and spreading the compost onto the existing soil.

"Soil Amendment", per acre.
The unit Contract price per acre for "Soil Amendment" shall be full pay for furnishing and incorporating the soil amendment into the existing soil.

"Plant Selection ___", per each.

INFORMATIONAL COPY ONLY - NOT FOR BIDDING

The unit Contract price for "Plant Selection ___", per each shall be full pay for all Work to perform the work as specified within the planting area prior to planting for weed control, planting area preparation and installation of plants with initial watering.

As the plants that do not include plant establishment are obtained, propagated, and grown, partial payments will be made as follows:

Payment of 15 percent of the unit Contract price per each when the plant materials have been contracted, propagated, and are growing under nursery conditions. The Contractor shall provide the Engineer with certification that the plant material has been procured or contracted for delivery to the project for planting within the time limits of the project. The certification shall state the location, quantity, and size of all material.

Payment will be increased to 100 percent of the unit Contract price per each for contracted plant material at the completion of the initial planting.

All partial payments shall be limited to the actual number of healthy vigorous plants that meet the stage requirements, limited to plan quantity. Previous partial payments made for materials rejected or missing will be deducted from future payments due the Contractor.

"PSIPE ___", per each.
The unit Contract price for "PSIPE ___", per each, shall be full pay for all Work necessary to perform as specified within the planting area for weed control and planting area preparation, planting, cleanup, and water necessary to complete planting operations as specified to the end of first year plant establishment.

As the plants that include plant establishment are obtained, propagated, and grown, partial payments will be made as follows after inspection by the Engineer:

Payment of 5 percent of the unit Contract price, per each, when the plant materials have been contracted, propagated, and are growing under nursery conditions. The Contractor shall provide the Engineer with certification that the plant material has been procured or contracted for delivery to the project for planting within the time limits of the project. The certification shall state the location, quantity, and size of all material.

Payment will be increased to 15 percent of the unit Contract price, per each, upon completion of the initial weed control and planting area preparation Work.

Payment will be increased to 60 percent of the unit Contract price per each for the contracted plant material in a designated unit area when planted.

Payment will be increased to 70 percent of the unit Contract price per each for contracted plant material at the completion of the initial planting.

Payment will be increased to the appropriate percentage upon reaching the following plant establishment milestones:

June 30th	80 percent
September 30th	90 percent

INFORMATIONAL COPY ONLY - NOT FOR BIDDING

Completion of first-year plant establishment or after all replacement plants have been installed, whichever is later.	100 percent

Plant establishment milestones are achieved when planting areas meet conditions described in Section 8-02.3(13).

"Seeding, Fertilizing and Mulching", per acre.

"Seeding and Fertilizing", per acre or per square yard.

"Seeding and Fertilizing by Hand", per square yard.

"Second Application of Fertilizer", per acre.

"Seeding and Mulching", per acre.

"Seeded Lawn Installation", per square yard.
"Sod Installation", per square yard.
"Lawn Mowing", per square yard.
The unit Contract price per square yard for "Seeded Lawn Installation" or "Sod Installation" shall be full pay for all costs necessary to prepare the area, plant or sod the lawn, erect barriers, control weeds, and establish lawn areas and for furnishing all labor, tools, equipment, and materials necessary to complete the Work as specified and shall be paid in the following sequence for healthy, vigorous lawn:

Completion of Lawn Planting	60 percent of individual areas
Mid Lawn Establishment (after two mowings)	85 percent of individual areas
Completion of Lawn Establishment (after four mowings)	100 percent of individual areas

"Plant Establishment Year ____" will be paid in accordance with Section 1-09.6.
For the purpose of providing a common Proposal for all Bidders, the Contracting Agency entered an amount for "Plant Establishment - ___ Year" in the Proposal to become a part of the total Bid by the Contractor.

"Live Pole", per each.

"Live Stake Row", per linear foot.

"Bark or Wood Chip Mulch", per acre.

"Bark or Wood Chip Mulch Rings", per each.
The unit Contract price per acre for "Bark or Wood Chip Mulch" shall be full pay for furnishing and spreading the mulch onto the existing soil.

"Fascine" and "PSIPE Live Fascine", per linear foot.
"Brush Mattress" and "PSIPE Live Brush Mattress", per square yard.
"Brush Layer" and "PSIPE Brush Layer", per linear foot.
When PSIPE is included with Fascine, Brush Mattress, or Brush Layer, the payment schedule for PSIPE ____ will apply.

INFORMATIONAL COPY ONLY - NOT FOR BIDDING

"Roadside Maintenance under Construction" will be paid in accordance with Section 1-09.6.
For the purpose of providing a common Proposal for all Bidders, the Contracting Agency has entered an amount for "Roadside Maintenance Under Construction" in the Proposal to become a part of the total Bid by the Contractor.

"Water", per M Gal.

Section 8-11, Guardrail
April 1, 2019

8-11.3(1)A Erection of Posts
The first sentence of the first paragraph is revised to read:

Posts shall be set to the true line and grade of the Highway after the grade is in place and compaction is completed.

8-11.3(1)C Terminal and Anchor Installation
The first paragraph is revised to read:

All excavation and backfilling required for installation of anchors shall be performed in accordance with Section 2-09, except that the costs thereof shall be included in the unit Contract price for the anchor installed.

The first sentence of the second to last paragraph is revised to read:

Assembly and installation of Beam Guardrail Non-flared Terminals for Type 31 guardrail shall be supervised at all times by a manufacturer's representative, or an installer who has been trained and certified by the manufacturer.

The last paragraph is revised to read:

Beam Guardrail Non-flared Terminals for Type 31 guardrail shall meet the crash test and evaluation criteria in the Manual for Assessing Safety Hardware (MASH).

8-11.4 Measurement
The third paragraph is revised to read:

Measurement of beam guardrail _____ terminal will be per each for the completed terminal.

The fourth paragraph is revised to read:

Measurement of beam guardrail Type 31 buried terminal Type 2 will be per linear foot for the completed terminal.

The sixth paragraph is revised to read:

Measurement of beam guardrail anchor Type 10 will be per each for the completed anchor, including the attachment of the anchor to the guardrail.

INFORMATIONAL COPY ONLY - NOT FOR BIDDING

8-11.5 Payment

The Bid item "Beam Guardrail Anchor Type ___", per each is revised to read "Beam Guardrail Anchor Type 10", per each.

The Bid item "Beam Guardrail Buried Terminal Type 1", per each is deleted from this section.

The Bid item "Beam Guardrail Buried Terminal Type 2", per linear foot and the following paragraph are revised to read:

> "Beam Guardrail Type 31 Buried Terminal Type 2", per linear foot.
>
> The unit Contract price per linear foot for "Beam Guardrail Type 31 Buried Terminal Type 2" shall be full payment for all costs to obtain and provide materials and perform the Work as described in Section 8-11.3(1)C.

Section 9-05, Drainage Structures and Culverts
January 7, 2019

9-05.3(1)A End Design and Joints

The second sentence of the first paragraph is revised to read:

> The joints and gasket material shall meet the requirements of ASTM C990.

9-05.3(1)C Age at Shipment

The last sentence of the first paragraph is revised to read:

> Unless it is tested and accepted at an earlier age, it shall not be considered ready for shipment sooner than 28 days after manufacture when made with Type II portland cement or blended hydraulic cement, nor sooner than 7 days when made with Type III portland cement.

9-05.7(3) Concrete Storm Sewer Pipe Joints

The second sentence is revised to read:

> The joints and gasket material shall meet the requirements of ASTM C990.

9-05.7(4)A Hydrostatic Pressure on Pipes in Straight Alignment

The first sentence is revised to read:

> Hydrostatic pressure tests on pipes in straight alignment shall be made in accordance with the procedure outlined in Section 10 of ASTM C990, except that they shall be performed on an assembly consisting of not less than three nor more than five pipe sections selected from stock by the Engineer and assembled in accordance with standard installation instructions issued by the manufacturer.

9-05.24(1) Polypropylene Culvert Pipe and Storm Sewer Pipe

This section is revised to read:

> Polypropylene culvert and storm sewer pipe shall conform to the following requirements:
>
> 1. For dual wall pipe sizes up to 60 inches: ASTM F2881 or AASHTO M 330, Type S or Type D.

INFORMATIONAL COPY ONLY - NOT FOR BIDDING

2. For double or triple wall pipe sizes up to 60 inches: ASTM F2764.

3. Fittings shall be factory welded, injection molded, or PVC.

9-05.24(2) Polypropylene Sanitary Sewer Pipe

This section is revised to read:

Polypropylene sanitary sewer pipe shall conform to the following requirements:

1. For pipe sizes up to 60 inches: ASTM F2764.

2. Fittings shall be factory welded, injection molded, or PVC.

Section 9-06, Structural Steel and Related Materials
January 7, 2019

9-06.5 Bolts

This section's title is revised to read:

Bolts and Rods

9-06.5(4) Anchor Bolts

This section, including title, is revised to read:

9-06.5(4) Anchor Bolts and Anchor Rods

Anchor bolts and anchor rods shall meet the requirements of ASTM F1554 and, unless otherwise specified, shall be Grade 105 and shall conform to Supplemental Requirements S2, S3, and S4.

Nuts for ASTM F1554 Grade 105 black anchor bolts and anchor rods shall conform to ASTM A563, Grade D or DH. Nuts for ASTM F1554 Grade 105 galvanized anchor bolts and anchor rods shall conform to either ASTM A563, Grade DH, or AASHTO M292, Grade 2H, and shall conform to the overtapping, lubrication, and rotational testing requirements in Section 9-06.5(3). Nuts for ASTM F1554 Grade 36 or 55 black or galvanized anchor bolts and anchor rods shall conform to ASTM A563, Grade A or DH. Washers shall conform to ASTM F436.

The bolts and rods shall be tested by the manufacturer in accordance with the requirements of the pertinent Specification and as specified in these Specifications. Anchor bolts, anchor rods, nuts, and washers shall be inspected prior to shipping to the project site. The Contractor shall submit to the Engineer for acceptance a Manufacturer's Certificate of Compliance for the anchor bolts, anchor rods, nuts, and washers, as defined in Section 1-06.3. If the Engineer deems it appropriate, the Contractor shall provide a sample of the anchor bolt, anchor rod, nut, and washer for testing.

All bolts, rods, nuts, and washers shall be marked and identified as required in the pertinent Specification.

9-06.15 Welded Shear Connectors

The third paragraph is revised to read:

Mechanical properties shall be determined in accordance with AASHTO T 244.

INFORMATIONAL COPY ONLY - NOT FOR BIDDING

9-06.17 Vacant

This section, including title, is revised to read:

9-06.17 Noise Barrier Wall Access Door

Access door frames shall be formed of 14-gauge steel to the size and dimensions shown in the Plans. The access door frame head and jamb members shall be mitered, securely welded, and ground smooth. Each head shall have two anchors and each jamb shall have three anchors. The hinges shall be reinforced with ¼-inch by 12-inch plate, width equal to the full inside width of the frame.

Access doors shall be full flush 1-¾-inch thick seamless doors with a polystyrene core. Door faces shall be constructed with smooth seamless 14-gauge roller-levered, cold-rolled steel sheet conforming to ASTM A 792 Type SS, Grade 33 minimum, Coating Designation AZ55 minimum. The vertical edges shall be neat interlocked hemmed edge seam. The top and bottom of the door shall be enclosed with 14-gauge channels. Mortise and reinforcement for locks and hinges shall be 10-gauge steel. Welded top cap shall be ground and filled for exterior applications. The bottom channel shall have weep holes.

Each access door shall have three hinges. Access door hinges shall be ASTM A 276 Type 316 stainless steel, 4-½-inches square, with stainless steel ball bearing and non-removable pins.

Each access door shall have two pull plates. The pull plates shall be ASTM A 240 Type 316 stainless steel, with a grip handle of one-inch diameter and 8 to 10-inches in length.

The door assembly shall be fabricated and assembled as a complete unit including all hardware specified prior to shipment.

9-06.18 Metal Bridge Railing

The second sentence of the first paragraph is revised to read:

Steel used for metal railings, when galvanized after fabrication in accordance with AASHTO M111, shall have a controlled silicon content of either 0.00 to 0.06 percent or 0.15 to 0.25 percent.

Section 9-14, Erosion Control and Roadside Planting
August 6, 2018

9-14.4(2) Hydraulically Applied Erosion Control Products (HECPs)

In Table 1, the last four rows are deleted.

9-14.4(2)A Long-Term Mulch

The first paragraph is supplemented with the following:

Products containing cellulose fiber produced from paper or paper components will not be accepted.

Table 2 is supplemented with the following new rows:

Water Holding Capacity	ASTM D 7367	800 percent minimum
Organic Matter Content	AASHTO T 267	90 percent minimum

INFORMATIONAL COPY ONLY - NOT FOR BIDDING

Seed Germination Enhancement	ASTM D 7322	Long Term 420 percent minimum

9-14.4(2)B Moderate-Term Mulch

This section is revised to read:

Within 48 hours of application, the Moderate-Term Mulch shall bond with the soil surface to create a continuous, absorbent, flexible, erosion-resistant blanket. Moderate-Term Mulch shall effectively perform the intended erosion control function in accordance with Section 8-01.3(1) for a minimum of 3 months, or until temporary vegetation has been established, whichever comes first.

Moderate-Term Mulch shall not be used in conjunction with permanent seeding.

9-14.4(2)C Short-Term Mulch

This section is revised to read:

Short-Term Mulch shall effectively perform the intended erosion control function in accordance with Section 8-01.3(1) for a minimum of 2 months, or until temporary vegetation has been established, whichever comes first. Short-Term Mulch shall not be used in conjunction with permanent seeding.

Section 9-16, Fence and Guardrail
August 6, 2018

9-16.3(1) Rail Element

The last sentence of the first paragraph is revised to read:

All rail elements shall be formed from 12-gage steel except for thrie beam reducer sections, reduced length thrie beam rail elements, thrie beams used for bridge rail retrofits, and Design F end sections, which shall be formed from 10-gage steel.

9-16.3(5) Anchors

The last paragraph is revised to read:

Cement grout shall conform to Section 9-20.3(4) and consist of one part portland cement or blended hydraulic cement and two parts sand.

Section 9-34, Pavement Marking Material
January 7, 2019

9-34.2(2) Color

The first sentence is revised to read:

Paint draw-downs shall be prepared according to ASTM D823.

INFORMATIONAL COPY ONLY - NOT FOR BIDDING

Each reference to "Federal Standard 595" is revised to read "SAE AMS Standard 595".

9-34.2(3) Prohibited Materials

This section is revised to read:

> Traffic paint shall not contain mercury, lead, chromium, diarylide pigments, toluene, chlorinated solvents, hydrolysable chlorine derivatives, ethylene-based glycol ethers and their acetates, nor any other EPA hazardous waste material over the regulatory levels in accordance with CFR 40 Part 261.24.

9-34.2(5) Low VOC Waterborne Paint

The heading "Standard Waterborne Paint" is supplemented with "Type 1 and 2".

The heading "High-Build Waterborne Paint" is supplemented with "Type 4".

The heading "Cold Weather Waterborne Paint" is supplemented with "Type 5".

In the row beginning with "° @90°F", each minimum value is revised to read "60".

In the row beginning with "Fineness of Grind, (Hegman Scale)", each minimum value is revised to read "3".

The last four rows are replaced with the following:

Vehicle Composition	ASTM D 2621	100% acrylic emulsion	100% cross-linking acrylic[4]	100% acrylic emulsion
Freeze-Thaw Stability, KU	ASTM D 2243 and D 562	@ 5 cycles show no coagulation or change in viscosity greater than ± 10 KU	@ 5 cycles show no coagulation or change in viscosity greater than ± 10 KU	@ 3 cycles show no coagulation or change in viscosity greater than ± 10 KU
Heat Stability	ASTM D 562[2]	± 10 KU from the initial viscosity	± 10 KU from the initial viscosity	± 10 KU from the initial Viscosity
Low Temperature Film Formation	ASTM D 2805[3]	No Cracks*		No Cracks
Cold Flexibility[5]	ASTM D522	Pass at 0.5 in mandrel*		
Test Deck Durability[6]	ASTM D913	≥70% paint retention in wheel track*		
Mud Cracking	(See note 7)	No Cracks	No Cracks	

After the preceding Amendments are applied, the following new column is inserted after the "Standard Waterborne Paint Type 1 and 2" column:

Semi-Durable Waterborne Paint Type 3			
White		Yellow	
Min.	Max.	Min.	Max.
Within ± 0.3 of qualification sample			
80	95	80	95
60		60	
77		77	
	65		65
43		43	
	1.25		1.25
3		3	

INFORMATIONAL COPY ONLY - NOT FOR BIDDING

0.98		0.96	
88		50	
100°		100°	
9.5		9.5	
	10		10
100% acrylic emulsion			
@ 5 cycles show no coagulation or change in viscosity greater than ± 10 KU			
± 10 KU from the initial viscosity			
No Cracks			
Pass at 0.25 in mandrel			
≥70% paint retention in wheel track			
No Cracks			

The footnotes are supplemented with the following:

[4]Cross-linking acrylic shall meet the requirements of federal specification TT-P-1952F Section 3.1.1.

[5]Cold Flexibility: The paint shall be applied to an aluminum panel at a wet film thickness of 15 mils and allowed to dry under ambient conditions (50±10% RH and 72±5 ˚F) for 24 hours. A cylindrical mandrel apparatus (in accordance with ASTM D522 method B) shall be put in a 40°F refrigerator when the paint is drawn down. After 24 hours, the aluminum panel with dry paint shall be put in the 40°F refrigerator with the mandrel apparatus for 2 hours. After 2 hours, the panel and test apparatus shall be removed and immediately tested to according to ASTM D522 to evaluate cold flexibility. Paint must show no evidence of cracking, chipping or flaking when bent 180 degrees over a mandrel bar of specified diameter.

[6]NTPEP test deck, or a test deck conforming to ASTM D713, shall be conducted for a minimum of six months with the following additional requirements: it shall be applied at 15 wet mils to a test deck that is located at 40N latitude or higher with at least 10,000 ADT and which was applied during the months of September through November.

[7]Paint is applied to an approximately 4"x12" aluminum panel using a drawdown bar with a 50 mil gap. The coated panel is allowed to dry under ambient conditions (50±10% RH and 72±5 ˚F) for 24 hours. Visual evaluation of the dry film shall reveal no cracks.

9-34.3 Plastic

In the first sentence of the last paragraph, "Federal Standard 595" is revised to read "SAE AMS Standard 595".

9-34.3(2) Type B – Pre-Formed Fused Thermoplastic

In the last two paragraphs, each reference to "Federal Standard 595" is revised to read "SAE AMS Standard 595".

9-34.3(4) Type D – Liquid Cold Applied Methyl Methacrylate

The Test Method value for **Adhesion to PCC or HMA, psi** is revised to read "ASTM D4541[1]".

9-34.4 Glass Beads for Pavement Marking Materials

In the Test Method column of the table titled Metal Concentration Limits, "EPA 3052 SW-846 6010C" is revised to read "EPA 3052 SW-846 6010D".

9-34.5(1) Temporary Pavement Marking Tape – Short Duration

This section, including title, is revised to read:

INFORMATIONAL COPY ONLY - NOT FOR BIDDING

9-34.5(1) Temporary Pavement Marking Tape – Short Duration (Removable)

Temporary pavement marking tape for short duration (usage is for up to two months) shall conform to ASTM D4592 Type I except that black tape, black mask tape and the black portion of the contrast removable tape, shall be non-reflective.

9-34.5(2) Temporary Pavement Marking Tape – Long Duration

This section's title is revised to read:

Temporary Pavement Marking Tape – Long Duration (Non-Removable)

The first sentence is revised to read:

Temporary pavement marking tape for long duration (usage is for greater than two months and less than one year) shall conform to ASTM D4592 Type II.

ASTM E2176 is deleted from the second sentence.

9-34.7(1) Requirements

The first paragraph is revised to read:

Field performance evaluation is required for low VOC solvent-based paint per Section 9-34.2(4), Type A – liquid hot applied thermoplastic per Section 9-34.3(1), Type B – preformed fused thermoplastic per Section 9-34.3(2), Type C – cold applied preformed tape per Section 9-34.3(3), and Type D – liquid applied methyl methacrylate per Section 9-34.3(4).

The last paragraph is deleted.

9-34.7(1)C Auto No-Track Time

The first paragraph is revised to read:

Auto No-Track Time will only be required for low VOC solvent-based paint in accordance with Section 9-34.2(4).

The second and third sentences of the second paragraph are deleted.

INFORMATIONAL COPY ONLY – NOT FOR BIDDING

1

INFORMATIONAL COPY ONLY - NOT FOR BIDDING

SPECIAL PROVISIONS
INTRODUCTION TO THE SPECIAL PROVISIONS

(August 14, 2013 APWA GSP)

The work on this project shall be accomplished in accordance with the *Standard Specifications for Road, Bridge and Municipal Construction*, 20$$18$$ edition, as issued by the Washington State Department of Transportation (WSDOT) and the American Public Works Association (APWA), Washington State Chapter (hereafter "Standard Specifications"). The Standard Specifications, as modified or supplemented by the Amendments to the Standard Specifications and these Special Provisions, all of which are made a part of the Contract Documents, shall govern all of the Work.

These Special Provisions are made up of both General Special Provisions (GSPs) from various sources, which may have project-specific fill-ins; and project-specific Special Provisions. Each Provision either supplements, modifies, or replaces the comparable Standard Specification, or is a new Provision. The deletion, amendment, alteration, or addition to any subsection or portion of the Standard Specifications is meant to pertain only to that particular portion of the section, and in no way should it be interpreted that the balance of the section does not apply.

The project-specific Special Provisions are not labeled as such. The GSPs are labeled under the headers of each GSP, with the effective date of the GSP and its source. For example:

(March 8, 2013 APWA GSP)
(April 1, 2013 WSDOT GSP)
(May 1, 2013 $$ GtCo $$ GSP)

Also incorporated into the Contract Documents by reference are:

- *Manual on Uniform Traffic Control Devices for Streets and Highways*, currently adopted edition, with Washington State modifications, if any
- *Standard Plans for Road, Bridge and Municipal Construction*, WSDOT/APWA, current edition
- $$Construction Manual, M-41, WSDOT, current edition$$

Contractor shall obtain copies of these publications, at Contractor's own expense.

INFORMATIONAL COPY ONLY - NOT FOR BIDDING

DIVISION 1 GENERAL REQUIREMENTS

DESCRIPTION OF WORK

(******)
This contract provides for the reconstruction of 4.03 miles of two lane county road in Grant County, WA, and includes roadway excavation, embankment compaction, crushed surfacing base course, crushed surfacing top course, guardrail, seeding and fertilizing, and other work all in accordance with the attached Contract Plans, these Contract Provisions and the Standard Specifications.

1-01 DEFINITIONS AND TERMS

1-01.3 Definitions

(January 4, 2016 APWA GSP)

Delete the heading **Completion Dates** and the three paragraphs that follow it, and replace them with the following:

Dates

Bid Opening Date
The date on which the Contracting Agency publicly opens and reads the Bids.

Award Date
The date of the formal decision of the Contracting Agency to accept the lowest responsible and responsive Bidder for the Work.

Contract Execution Date
The date the Contracting Agency officially binds the Agency to the Contract.

Notice to Proceed Date
The date stated in the Notice to Proceed on which the Contract time begins.

Substantial Completion Date
The day the Engineer determines the Contracting Agency has full and unrestricted use and benefit of the facilities, both from the operational and safety standpoint, any remaining traffic disruptions will be rare and brief, and only minor incidental work, replacement of temporary substitute facilities, plant establishment periods, or correction or repair remains for the Physical Completion of the total Contract.

Physical Completion Date
The day all of the Work is physically completed on the project. All documentation required by the Contract and required by law does not necessarily need to be furnished by the Contractor by this date.

Completion Date
The day all the Work specified in the Contract is completed and all the obligations of the Contractor under the contract are fulfilled by the Contractor. All documentation required by the Contract and required by law must be furnished by the Contractor before establishment of this date.

Final Acceptance Date
The date on which the Contracting Agency accepts the Work as complete.

Supplement this Section with the following:

All references in the Standard Specifications, Amendments, or WSDOT General Special Provisions, to the terms "Department of Transportation", "Washington State Transportation

INFORMATIONAL COPY ONLY - NOT FOR BIDDING

Commission", "Commission", "Secretary of Transportation", "Secretary", "Headquarters", and "State Treasurer" shall be revised to read "Contracting Agency".

All references to the terms "State" or "state" shall be revised to read "Contracting Agency" unless the reference is to an administrative agency of the State of Washington, a State statute or regulation, or the context reasonably indicates otherwise.

All references to "State Materials Laboratory" shall be revised to read "Contracting Agency designated location".

All references to "final contract voucher certification" shall be interpreted to mean the Contracting Agency form(s) by which final payment is authorized, and final completion and acceptance granted.

Additive

A supplemental unit of work or group of bid items, identified separately in the Bid Proposal, which may, at the discretion of the Contracting Agency, be awarded in addition to the base bid.

Alternate

One of two or more units of work or groups of bid items, identified separately in the Bid Proposal, from which the Contracting Agency may make a choice between different methods or material of construction for performing the same work.

Business Day

A business day is any day from Monday through Friday except holidays as listed in Section 1-08.5.

Contract Bond

The definition in the Standard Specifications for "Contract Bond" applies to whatever bond form(s) are required by the Contract Documents, which may be a combination of a Payment Bond and a Performance Bond.

Contract Documents

See definition for "Contract".

Contract Time

The period of time established by the terms and conditions of the Contract within which the Work must be physically completed.

Notice of Award

The written notice from the Contracting Agency to the successful Bidder signifying the Contracting Agency's acceptance of the Bid Proposal.

Notice to Proceed

The written notice from the Contracting Agency or Engineer to the Contractor authorizing and directing the Contractor to proceed with the Work and establishing the date on which the Contract time begins.

Traffic

Both vehicular and non-vehicular traffic, such as pedestrians, bicyclists, wheelchairs, and equestrian traffic.

INFORMATIONAL COPY ONLY - NOT FOR BIDDING

1-02 BID PROCEDURES AND CONDITIONS

1-02.1 Prequalification of Bidders

Delete this section and replace it with the following:

1-02.1 Qualifications of Bidder

(January 24, 2011 APWA GSP)

Before award of a public works contract, a bidder must meet at least the minimum qualifications of RCW 39.04.350(1) to be considered a responsible bidder and qualified to be awarded a public works project.

1-02.2 Plans and Specifications

(June 27, 2011 APWA GSP)

Delete this section and replace it with the following:

Information as to where Bid Documents can be obtained or reviewed can be found in the Notice to Contractors (Advertisement for Bids) for the work.

After award of the contract, plans and specifications will be issued to the Contractor at no cost as detailed below:

To Prime Contractor	No. of Sets	Basis of Distribution
Reduced plans (11" x 17")	4	Furnished automatically upon award.
Contract Provisions	4	Furnished automatically upon award.
Large plans (e.g., 22" x 34")	0	Furnished only upon request.

Additional plans and Contract Provisions may be obtained by the Contractor from the source stated in the Notice To Contractors, at the Contractor's own expense.

1-02.5 Proposal Forms

(July 31, 2017 APWA GSP)

Delete this section and replace it with the following:

The Proposal Form will identify the project and its location and describe the work. It will also list estimated quantities, units of measurement, the items of work, and the materials to be furnished at the unit bid prices. The bidder shall complete spaces on the proposal form that

INFORMATIONAL COPY ONLY - NOT FOR BIDDING

call for, but are not limited to, unit prices; extensions; summations; the total bid amount; signatures; date; and, where applicable, retail sales taxes and acknowledgment of addenda; the bidder's name, address, telephone number, and signature; the bidder's UDBE/DBE/M/WBE commitment, if applicable; a State of Washington Contractor's Registration Number; and a Business License Number, if applicable. Bids shall be completed by typing or shall be printed in ink by hand, preferably in black ink. The required certifications are included as part of the Proposal Form.

The Contracting Agency reserves the right to arrange the proposal forms with alternates and additives, if such be to the advantage of the Contracting Agency. The bidder shall bid on all alternates and additives set forth in the Proposal Form unless otherwise specified.

1-02.6 Preparation of Proposal
(June 27, 2011 APWA GSP)

Supplement the second paragraph with the following:

4. If a minimum bid amount has been established for any item, the unit or lump sum price must equal or exceed the minimum amount stated.

5. Any correction to a bid made by interlineation, alteration, or erasure, shall be initialed by the signer of the bid.

Delete the last paragraph, and replace it with the following:

The Bidder shall make no stipulation on the Bid Form, nor qualify the bid in any manner.

A bid by a corporation shall be executed in the corporate name, by the president or a vice president (or other corporate officer accompanied by evidence of authority to sign).

A bid by a partnership shall be executed in the partnership name, and signed by a partner. A copy of the partnership agreement shall be submitted with the Bid Form if any D/M/WBE requirements are to be satisfied through such an agreement.
A bid by a joint venture shall be executed in the joint venture name and signed by a member of the joint venture. A copy of the joint venture agreement shall be submitted with the Bid Form if any D/W/MBE requirements are to be satisfied through such an agreement.

(August 4, 2004)

The fifth and sixth paragraphs of Section 1-02.6 are deleted.

1-02.7 Bid Deposit
(March 8, 2013 APWA GSP)

Supplement this section with the following:

Bid bonds shall contain the following:

1. Contracting Agency-assigned number for the project;
2. Name of the project;
3. The Contracting Agency named as obligee;
4. The amount of the bid bond stated either as a dollar figure or as a percentage which represents five percent of the maximum bid amount that could be awarded;

INFORMATIONAL COPY ONLY - NOT FOR BIDDING

5. Signature of the bidder's officer empowered to sign official statements. The signature of the person authorized to submit the bid should agree with the signature on the bond, and the title of the person must accompany the said signature;
6. The signature of the surety's officer empowered to sign the bond and the power of attorney.

If so stated in the Contract Provisions, bidder must use the bond form included in the Contract Provisions.

If so stated in the Contract Provisions, cash will not be accepted for a bid deposit.

1-02.9 Delivery of Proposal

(December 19, 2019 APWA GSP, Option A)

Delete this section and replace it with the following:

Each Proposal shall be submitted in a sealed envelope, with the Project Name and Project Number as stated in the Call for Bids clearly marked on the outside of the envelope, or as otherwise required in the Bid Documents, to ensure proper handling and delivery.

To be considered responsive on a FHWA-funded project, the Bidder may be required to submit the following items, as required by Section 1-02.6:

- UDBE Written Confirmation Document from each UDBE firm listed on the Bidder's completed UDBE Utilization Certification (WSDOT 272-056U)
- Good Faith Effort (GFE) Documentation
- UDBE Bid Item Breakdown (WSDOT 272-054)
- UDBE Trucking Credit Form (WSDOT 272-058)

These documents, if applicable, shall be received either with the Bid Proposal or as a supplement to the Bid. These documents shall be received **no later than 48 hours** (not including Saturdays, Sundays and Holidays) after the time for delivery of the Bid Proposal.

If submitted after the Bid Proposal is due, the document(s) must be submitted in a sealed envelope labeled the same as for the Proposal, with "Supplemental Information" added. All other information required to be submitted with the Bid Proposal must be submitted with the Bid Proposal itself, at the time stated in the Call for Bids.

Proposals that are received as required will be publicly opened and read as specified in Section 1-02.12. The Contracting Agency will not open or consider any Bid Proposal that is received after the time specified in the Call for Bids for receipt of Bid Proposals, or received in a location other than that specified in the Call for Bids. The Contracting Agency will not open or consider any "Supplemental Information" (UDBE confirmations, or GFE documentation) that is received after the time specified above, or received in a location other than that specified in the Call for Bids.

If an emergency or unanticipated event interrupts normal work processes of the Contracting Agency so that Proposals cannot be received at the office designated for receipt of bids as specified in Section 1-02.12 the time specified for receipt of the Proposal will be deemed to be extended to the same time of day specified in the solicitation on the first work day on which the normal work processes of the Contracting Agency resume.

INFORMATIONAL COPY ONLY - NOT FOR BIDDING

1-02.10 Withdrawing, Revising, or Supplementing Proposal
(July 23, 2015 APWA GSP)

Delete this section, and replace it with the following:

After submitting a physical Bid Proposal to the Contracting Agency, the Bidder may withdraw, revise, or supplement it if:

1. The Bidder submits a written request signed by an authorized person and physically delivers it to the place designated for receipt of Bid Proposals, and
2. The Contracting Agency receives the request before the time set for receipt of Bid Proposals, and
3. The revised or supplemented Bid Proposal (if any) is received by the Contracting Agency before the time set for receipt of Bid Proposals.

If the Bidder's request to withdraw, revise, or supplement its Bid Proposal is received before the time set for receipt of Bid Proposals, the Contracting Agency will return the unopened Proposal package to the Bidder. The Bidder must then submit the revised or supplemented package in its entirety. If the Bidder does not submit a revised or supplemented package, then its bid shall be considered withdrawn.

Late revised or supplemented Bid Proposals or late withdrawal requests will be date recorded by the Contracting Agency and returned unopened. Mailed, emailed, or faxed requests to withdraw, revise, or supplement a Bid Proposal are not acceptable.

Public Opening Of Proposals
Section 1-02.12 is supplemented with the following:

(******)
Date Of Opening Bids
Sealed bids are to be received at the following location prior to the time specified:

The Office of the Board of County Commissioners, Grant County Courthouse, Room 207, 35 C St. NW, P.O. Box 37, Ephrata, WA 98823

The bid opening date for this project is **May 12, 2020**. Bids received will be publicly opened and read after **1:30 P.M.** on this date.

1-02.13 Irregular Proposals
(June 20, 2017 APWA GSP)

Delete this section and replace it with the following:

1. A Proposal will be considered irregular and will be rejected if:
   a. The Bidder is not prequalified when so required;
   b. The authorized Proposal form furnished by the Contracting Agency is not used or is altered;
   c. The completed Proposal form contains any unauthorized additions, deletions, alternate Bids, or conditions;
   d. The Bidder adds provisions reserving the right to reject or accept the award, or enter into the Contract;
   e. A price per unit cannot be determined from the Bid Proposal;
   f. The Proposal form is not properly executed;

INFORMATIONAL COPY ONLY - NOT FOR BIDDING

g. The Bidder fails to submit or properly complete a Subcontractor list, if applicable, as required in Section 1-02.6;

h. The Bidder fails to submit or properly complete an Underutilized Disadvantaged Business Enterprise Certification, if applicable, as required in Section 1-02.6;

i. The Bidder fails to submit written confirmation from each UDBE firm listed on the Bidder's completed UDBE Utilization Certification that they are in agreement with the bidder's UDBE participation commitment, if applicable, as required in Section 1-02.6, or if the written confirmation that is submitted fails to meet the requirements of the Special Provisions;

j The Bidder fails to submit UDBE Good Faith Effort documentation, if applicable, as required in Section 1-02.6, or if the documentation that is submitted fails to demonstrate that a Good Faith Effort to meet the Condition of Award was made;

k. The Bid Proposal does not constitute a definite and unqualified offer to meet the material terms of the Bid invitation; or

l. More than one Proposal is submitted for the same project from a Bidder under the same or different names.

2. A Proposal may be considered irregular and may be rejected if:

a. The Proposal does not include a unit price for every Bid item;

b. Any of the unit prices are excessively unbalanced (either above or below the amount of a reasonable Bid) to the potential detriment of the Contracting Agency;

c. Receipt of Addenda is not acknowledged;

d. A member of a joint venture or partnership and the joint venture or partnership submit Proposals for the same project (in such an instance, both Bids may be rejected); or

e. If Proposal form entries are not made in ink.

1-02.14 Disqualification of Bidders

(May 17, 2018 APWA GSP, Option A)

Delete this section and replace it with the following:

A Bidder will be deemed not responsible if the Bidder does not meet the mandatory bidder responsibility criteria in RCW 39.04.350(1), as amended.

The Contracting Agency will verify that the Bidder meets the mandatory bidder responsibility criteria in RCW 39.04.350(1). To assess bidder responsibility, the Contracting Agency reserves the right to request documentation as needed from the Bidder and third parties concerning the Bidder's compliance with the mandatory bidder responsibility criteria.

If the Contracting Agency determines the Bidder does not meet the mandatory bidder responsibility criteria in RCW 39.04.350(1) and is therefore not a responsible Bidder, the Contracting Agency shall notify the Bidder in writing, with the reasons for its determination. If the Bidder disagrees with this determination, it may appeal the determination within two (2) business days of the Contracting Agency's determination by presenting its appeal and any additional information to the Contracting Agency. The Contracting Agency will consider the appeal and any additional information before issuing its final determination. If the final determination affirms that the Bidder is not responsible, the Contracting Agency will not execute a contract with any other Bidder until at least two business days after the Bidder determined to be not responsible has received the Contracting Agency's final determination

INFORMATIONAL COPY ONLY - NOT FOR BIDDING

1-02.15 Pre Award Information
(August 14, 2013 APWA GSP)

Revise this section to read:

Before awarding any contract, the Contracting Agency may require one or more of these items or actions of the apparent lowest responsible bidder:

1. A complete statement of the origin, composition, and manufacture of any or all materials to be used,
2. Samples of these materials for quality and fitness tests,
3. A progress schedule (in a form the Contracting Agency requires) showing the order of and time required for the various phases of the work,
4. A breakdown of costs assigned to any bid item,
5. Attendance at a conference with the Engineer or representatives of the Engineer,
6. Obtain, and furnish a copy of, a business license to do business in the city or county where the work is located.
7. Any other information or action taken that is deemed necessary to ensure that the bidder is the lowest responsible bidder.

1-03 AWARD AND EXECUTION OF CONTRACT

1-03.3 Execution of Contract
(October 1, 2005 APWA GSP)

Revise this section to read:

Copies of the Contract Provisions, including the unsigned Form of Contract, will be available for signature by the successful bidder on the first business day following award. The number of copies to be executed by the Contractor will be determined by the Contracting Agency.

Within **10 (ten) calendar days** after the award date, the successful bidder shall return the signed Contracting Agency-prepared contract, an insurance certification as required by Section 1-07.18, and a satisfactory bond as required by law and Section 1-03.4. Before execution of the contract by the Contracting Agency, the successful bidder shall provide any pre-award information the Contracting Agency may require under Section 1-02.15.

Until the Contracting Agency executes a contract, no proposal shall bind the Contracting Agency nor shall any work begin within the project limits or within Contracting Agency-furnished sites. The Contractor shall bear all risks for any work begun outside such areas and for any materials ordered before the contract is executed by the Contracting Agency.

If the bidder experiences circumstances beyond their control that prevents return of the contract documents within the calendar days after the award date stated above, the Contracting Agency may grant up to a maximum of 5 (five) additional calendar days for return of the documents, provided the Contracting Agency deems the circumstances warrant it.

1-03.4 Contract Bond

INFORMATIONAL COPY ONLY - NOT FOR BIDDING

(July 23, 2015 APWA GSP)

Delete the first paragraph and replace it with the following:

The successful bidder shall provide executed payment and performance bond(s) for the full contract amount. The bond may be a combined payment and performance bond; or be separate payment and performance bonds. In the case of separate payment and performance bonds, each shall be for the full contract amount. The bond(s) shall:

1. Be on Contracting Agency-furnished form(s);
2. Be signed by an approved surety (or sureties) that:
   a. Is registered with the Washington State Insurance Commissioner, and
   b. Appears on the current Authorized Insurance List in the State of Washington published by the Office of the Insurance Commissioner,
3. Guarantee that the Contractor will perform and comply with all obligations, duties, and conditions under the Contract, including but not limited to the duty and obligation to indemnify, defend, and protect the Contracting Agency against all losses and claims related directly or indirectly from any failure:
   a. Of the Contractor (or any of the employees, subcontractors, or lower tier subcontractors of the Contractor) to faithfully perform and comply with all contract obligations, conditions, and duties, or
   b. Of the Contractor (or the subcontractors or lower tier subcontractors of the Contractor) to pay all laborers, mechanics, subcontractors, lower tier subcontractors, material person, or any other person who provides supplies or provisions for carrying out the work;
4. Be conditioned upon the payment of taxes, increases, and penalties incurred on the project under titles 50, 51, and 82 RCW; and
5. Be accompanied by a power of attorney for the Surety's officer empowered to sign the bond; and
6. Be signed by an officer of the Contractor empowered to sign official statements (sole proprietor or partner). If the Contractor is a corporation, the bond(s) must be signed by the president or vice president, unless accompanied by written proof of the authority of the individual signing the bond(s) to bind the corporation (i.e., corporate resolution, power of attorney, or a letter to such effect signed by the president or vice president).

1-04 SCOPE OF THE WORK

1-04.2 Coordination of Contract Documents, Plans, Special Provisions, Specifications, and Addenda

(March 13, 2012 APWA GSP)

Revise the second paragraph to read:

Any inconsistency in the parts of the contract shall be resolved by following this order of precedence (e.g., 1 presiding over 2, 2 over 3, 3 over 4, and so forth):

1. Addenda,
2. Proposal Form,
3. Special Provisions,
4. Contract Plans,
5. Amendments to the Standard Specifications,
6. Standard Specifications,
7. <u>Contracting Agency's Standard Plans or Details (if any)</u>, and

INFORMATIONAL COPY ONLY - NOT FOR BIDDING

8. WSDOT Standard Plans for Road, Bridge, and Municipal Construction.

1-05 CONTROL OF WORK

1-05.7 Removal of Defective and Unauthorized Work

(October 1, 2005 APWA GSP)

Supplement this section with the following:

If the Contractor fails to remedy defective or unauthorized work within the time specified in a written notice from the Engineer, or fails to perform any part of the work required by the Contract Documents, the Engineer may correct and remedy such work as may be identified in the written notice, with Contracting Agency forces or by such other means as the Contracting Agency may deem necessary.

If the Contractor fails to comply with a written order to remedy what the Engineer determines to be an emergency situation, the Engineer may have the defective and unauthorized work corrected immediately, have the rejected work removed and replaced, or have work the Contractor refuses to perform completed by using Contracting Agency or other forces. An emergency situation is any situation when, in the opinion of the Engineer, a delay in its remedy could be potentially unsafe, or might cause serious risk of loss or damage to the public.

Direct or indirect costs incurred by the Contracting Agency attributable to correcting and remedying defective or unauthorized work, or work the Contractor failed or refused to perform, shall be paid by the Contractor. Payment will be deducted by the Engineer from monies due, or to become due, the Contractor. Such direct and indirect costs shall include in particular, but without limitation, compensation for additional professional services required, and costs for repair and replacement of work of others destroyed or damaged by correction, removal, or replacement of the Contractor's unauthorized work.

No adjustment in contract time or compensation will be allowed because of the delay in the performance of the work attributable to the exercise of the Contracting Agency's rights provided by this Section.

The rights exercised under the provisions of this section shall not diminish the Contracting Agency's right to pursue any other avenue for additional remedy or damages with respect to the Contractor's failure to perform the work as required.

1-05.9 Equipment

Section 1-05.9 is supplemented with the following:

(May 12, 2016 GtCo GSP)

Global Positioning Control Equipment

This specification contains requirements for the use of Global Positioning System (GPS) Controlled Equipment.

The Contractor may use (GPS) controlled equipment that produces results meeting the requirements of the Contract.

Electronic data may be provided for the contractor's conveniences, and is not part of the Contract. No Guarantee or warranty is made by the Contracting Agency that electronic data

INFORMATIONAL COPY ONLY - NOT FOR BIDDING

provided to the Contractor: is compatible with any of the systems that are used by the Contractor; is complete; is representative of actual conditions at the project site, or; accurately reflects the quantities and character of the actual Work required. The furnishing of electronic design data or documentation shall not relieve the Contractor from any risks or of any duty to make examinations and investigations as required by Section 1-02.4 or any other responsibility under the Contract or as required by law. Except as provided above, no corrections, additions, or updates of any kind will be made to electronic data provided to the Contractor.

The Engineer may perform spot checks of the Contractor's (GPS) controlled equipment grading results, calculations, records, field procedures, and quality control measures. If the Engineer determines that the Work being performed is not achieving results that will meet the Contract requirements, the Contractor shall make corrections to the Work at no additional cost to the Contracting Agency.

Contracting Agency Responsibilities

1. The Project Engineer will set the initial horizontal and vertical control points for the project as shown in the Contract documents.

2. After execution of the Contract, the Project Engineer will make available upon written request the following electronic data used to design the project:

   *** Original Ground Points and the Centerline Design Alignments ***

Contractor's Responsibilities

1. The Contractor shall provide any information or data that is requested by the Contracting Agency for the purpose of performing the verification of quantities, and quality.

2. The Contractor shall be responsible for any edits or conversions of the Contracting Agencies electronic data whether done by the Contractor or a vendor that is hired by the Contractor to perform such edits or conversions.

3. The Contractor shall be responsible for the accuracy and usability of any data or model that is developed from the Contracting Agencies data.

4. The Contractor shall be responsible for checking and recalibrating (GPS) controlled equipment as required to achieve results that meet the requirements of the Contract.

5. The Contractor shall be responsible for establishing any additional control points needed to achieve results that meet the requirements of the Contract.

Payment

All costs associated with the use of (GPS) controlled equipment are incidental to related items of Work, and no additional payment will be provided.

1-05.11 Final Inspection

Delete this section and replace it with the following:

1-05.11 Final Inspections and Operational Testing
(October 1, 2005 APWA GSP)

1-05.11(1) Substantial Completion Date

INFORMATIONAL COPY ONLY - NOT FOR BIDDING

When the Contractor considers the work to be substantially complete, the Contractor shall so notify the Engineer and request the Engineer establish the Substantial Completion Date. The Contractor's request shall list the specific items of work that remain to be completed in order to reach physical completion. The Engineer will schedule an inspection of the work with the Contractor to determine the status of completion. The Engineer may also establish the Substantial Completion Date unilaterally.

If, after this inspection, the Engineer concurs with the Contractor that the work is substantially complete and ready for its intended use, the Engineer, by written notice to the Contractor, will set the Substantial Completion Date. If, after this inspection the Engineer does not consider the work substantially complete and ready for its intended use, the Engineer will, by written notice, so notify the Contractor giving the reasons therefor.

Upon receipt of written notice concurring in or denying substantial completion, whichever is applicable, the Contractor shall pursue vigorously, diligently and without unauthorized interruption, the work necessary to reach Substantial and Physical Completion. The Contractor shall provide the Engineer with a revised schedule indicating when the Contractor expects to reach substantial and physical completion of the work.

The above process shall be repeated until the Engineer establishes the Substantial Completion Date and the Contractor considers the work physically complete and ready for final inspection.

1-05.11(2) Final Inspection and Physical Completion Date

When the Contractor considers the work physically complete and ready for final inspection, the Contractor by written notice, shall request the Engineer to schedule a final inspection. The Engineer will set a date for final inspection. The Engineer and the Contractor will then make a final inspection and the Engineer will notify the Contractor in writing of all particulars in which the final inspection reveals the work incomplete or unacceptable. The Contractor shall immediately take such corrective measures as are necessary to remedy the listed deficiencies. Corrective work shall be pursued vigorously, diligently, and without interruption until physical completion of the listed deficiencies. This process will continue until the Engineer is satisfied the listed deficiencies have been corrected.

If action to correct the listed deficiencies is not initiated within 7 days after receipt of the written notice listing the deficiencies, the Engineer may, upon written notice to the Contractor, take whatever steps are necessary to correct those deficiencies pursuant to Section 1-05.7.
The Contractor will not be allowed an extension of contract time because of a delay in the performance of the work attributable to the exercise of the Engineer's right hereunder.

Upon correction of all deficiencies, the Engineer will notify the Contractor and the Contracting Agency, in writing, of the date upon which the work was considered physically complete. That date shall constitute the Physical Completion Date of the contract, but shall not imply acceptance of the work or that all the obligations of the Contractor under the contract have been fulfilled.

1-05.11(3) Operational Testing

It is the intent of the Contracting Agency to have at the Physical Completion Date a complete and operable system. Therefore when the work involves the installation of machinery or other mechanical equipment; street lighting, electrical distribution or signal

INFORMATIONAL COPY ONLY - NOT FOR BIDDING

systems; irrigation systems; buildings; or other similar work it may be desirable for the Engineer to have the Contractor operate and test the work for a period of time after final inspection but prior to the physical completion date. Whenever items of work are listed in the Contract Provisions for operational testing they shall be fully tested under operating conditions for the time period specified to ensure their acceptability prior to the Physical Completion Date. During and following the test period, the Contractor shall correct any items of workmanship, materials, or equipment which prove faulty, or that are not in first class operating condition. Equipment, electrical controls, meters, or other devices and equipment to be tested during this period shall be tested under the observation of the Engineer, so that the Engineer may determine their suitability for the purpose for which they were installed. The Physical Completion Date cannot be established until testing and corrections have been completed to the satisfaction of the Engineer.

The costs for power, gas, labor, material, supplies, and everything else needed to successfully complete operational testing, shall be included in the unit contract prices related to the system being tested, unless specifically set forth otherwise in the proposal.

Operational and test periods, when required by the Engineer, shall not affect a manufacturer's guaranties or warranties furnished under the terms of the contract.

1-05.13 Superintendents, Labor and Equipment of Contractor

Revise the seventh paragraph of Section 1-05.13 to read:

(******)

Whenever the Contracting Agency evaluates the Contractor's qualifications pursuant to Section 1-02.1 and 1-02.14, it will take these performance reports into account.

1-05.14 Cooperation With Other Contractors

Section 1-05.14 is supplemented with the following:

(March 13, 1995)

Other Contracts Or Other Work

It is anticipated that the following work adjacent to or within the limits of this project will be performed by others during the course of this project and will require coordination of the work:

1. Utility relocations and/or normal maintenance work by telephone and power companies.
2. Normal maintenance work by Grant County Road crews.
3. Normal maintenance work by irrigation district crews.

1-05.15 Method of Serving Notices

(March 25, 2009 APWA GSP)

Revise the second paragraph to read:

All correspondence from the Contractor shall be directed to the Project Engineer. All correspondence from the Contractor constituting any notification, notice of protest, notice of dispute, or other correspondence constituting notification required to be furnished under the Contract, must be in paper format, hand delivered or sent via mail delivery service to the Project Engineer's office. Electronic copies such as e-mails or electronically delivered

INFORMATIONAL COPY ONLY - NOT FOR BIDDING

copies of correspondence will not constitute such notice and will not comply with the requirements of the Contract.

Add the following new section:

1-05.16 Water and Power
(October 1, 2005 APWA GSP)

The Contractor shall make necessary arrangements, and shall bear the costs for power and water necessary for the performance of the work, unless the contract includes power and water as a pay item.

Add the following new section:

1-05.17 Oral Agreements
(October 1, 2005 AWPA GSP)

No oral agreement or conversation with any officer, agent, or employee of the Contracting Agency, either before or after execution of the contract, shall affect or modify any of the terms or obligations contained in any of the documents comprising the contract. Such oral agreement or conversation shall be considered as unofficial information and in no way binding upon the Contracting Agency, unless subsequently put in writing and signed by the Contracting Agency.

1-07 LEGAL RELATIONS AND RESPONSIBILITIES TO THE PUBLIC

1-07.1 Laws to be Observed
(October 1, 2005 APWA GSP)

Section 1-07.1 is supplement with the following:

In cases of conflict between different safety regulations, the more stringent regulation shall apply.

The Washington State Department of Labor and Industries shall be the sole and paramount administrative agency responsible for the administration of the provisions of the Washington Industrial Safety and Health Act of 1973 (WISHA).

The Contractor shall maintain at the project site office, or other well known place at the project site, all articles necessary for providing first aid to the injured. The Contractor shall establish, publish, and make known to all employees, procedures for ensuring immediate removal to a hospital, or doctor's care, persons, including employees, who may have been injured on the project site. Employees should not be permitted to work on the project site before the Contractor has established and made known procedures for removal of injured persons to a hospital or a doctor's care.

The Contractor shall have sole responsibility for the safety, efficiency, and adequacy of the Contractor's plant, appliances, and methods, and for any damage or injury resulting from their failure, or improper maintenance, use, or operation. The Contractor shall be solely and completely responsible for the conditions of the project site, including safety for all persons and property in the performance of the work. This requirement shall apply continuously, and

INFORMATIONAL COPY ONLY – NOT FOR BIDDING

not be limited to normal working hours. The required or implied duty of the Engineer to conduct construction review of the Contractor's performance does not, and shall not, be intended to include review and adequacy of the Contractor's safety measures in, on, or near the project site.

(April 6, 2020)
In response to COVID-19, the Contractor shall prepare a project specific COVID-19 health and safety plan (CHSP) in conformance with Section 1-07.4(2) as supplemented in these specifications, **COVID-19 Health and Safety Plan (CHSP)**. A copy of the CHSP developed by the Contractor shall be submitted to the Engineer as a Type 2 Working Drawing.

1-07.2 State Taxes

Delete this section, including its sub-sections, in its entirety and replace it with the following:

1-07.2 State Sales Tax
(June 27, 2011 APWA GSP)

The Washington State Department of Revenue has issued special rules on the State sales tax. Sections 1-07.2(1) through 1-07.2(3) are meant to clarify those rules. The Contractor should contact the Washington State Department of Revenue for answers to questions in this area. The Contracting Agency will not adjust its payment if the Contractor bases a bid on a misunderstood tax liability.

The Contractor shall include all Contractor-paid taxes in the unit bid prices or other contract amounts. In some cases, however, state retail sales tax will not be included. Section 1-07.2(2) describes this exception.

The Contracting Agency will pay the retained percentage (or release the Contract Bond if a FHWA-funded Project) only if the Contractor has obtained from the Washington State Department of Revenue a certificate showing that all contract-related taxes have been paid (RCW 60.28.051). The Contracting Agency may deduct from its payments to the Contractor any amount the Contractor may owe the Washington State Department of Revenue, whether the amount owed relates to this contract or not. Any amount so deducted will be paid into the proper State fund.

1-07.2(1) State Sales Tax — Rule 171

WAC 458-20-171, and its related rules, apply to building, repairing, or improving streets, roads, etc., which are owned by a municipal corporation, or political subdivision of the state, or by the United States, and which are used primarily for foot or vehicular traffic. This includes storm or combined sewer systems within and included as a part of the street or road drainage system and power lines when such are part of the roadway lighting system. For work performed in such cases, the Contractor shall include Washington State Retail Sales Taxes in the various unit bid item prices, or other contract amounts, including those that the Contractor pays on the purchase of the materials, equipment, or supplies used or consumed in doing the work.

INFORMATIONAL COPY ONLY - NOT FOR BIDDING

1-07.2(2) State Sales Tax — Rule 170

WAC 458-20-170, and its related rules, apply to the constructing and repairing of new or existing buildings, or other structures, upon real property. This includes, but is not limited to, the construction of streets, roads, highways, etc., owned by the state of Washington; water mains and their appurtenances; sanitary sewers and sewage disposal systems unless such sewers and disposal systems are within, and a part of, a street or road drainage system; telephone, telegraph, electrical power distribution lines, or other conduits or lines in or above streets or roads, unless such power lines become a part of a street or road lighting system; and installing or attaching of any article of tangible personal property in or to real property, whether or not such personal property becomes a part of the realty by virtue of installation.

For work performed in such cases, the Contractor shall collect from the Contracting Agency, retail sales tax on the full contract price. The Contracting Agency will automatically add this sales tax to each payment to the Contractor. For this reason, the Contractor shall not include the retail sales tax in the unit bid item prices, or in any other contract amount subject to Rule 170, with the following exception.

Exception: The Contracting Agency will not add in sales tax for a payment the Contractor or a subcontractor makes on the purchase or rental of tools, machinery, equipment, or consumable supplies not integrated into the project. Such sales taxes shall be included in the unit bid item prices or in any other contract amount.

1-07.2(3) Services

The Contractor shall not collect retail sales tax from the Contracting Agency on any contract wholly for professional or other services (as defined in Washington State Department of Revenue Rules 138 and 244).

INFORMATIONAL COPY ONLY - NOT FOR BIDDING

1-07.4 Sanitation

1-07.4(2) Health Hazards

Section 1-07.4(2) is supplemented with the following:

(April 7, 2020)

COVID-19 Health and Safety Plan (CHSP)

The Contractor shall prepare a project specific COVID-19 health and safety plan (CHSP). The CHSP shall be prepared and submitted as a Type 2 Working Drawing prior to beginning physical Work.

The Contractor shall update and resubmit the CHSP as the work progresses and new activities appear on the look ahead schedule required under Section 1-08.3(2)D. If the conditions change on the project, or a particular activity, the Contractor shall update and resubmit the CHSP. Work on any activity shall cease if conditions prevent full compliance with the CHSP.

The CHSP shall address the health and safety of all people associated with the project including State workers in the field, Contractor personnel, consultants, project staff, subcontractors, suppliers and anyone on the project site, staging areas, or yards. The plan shall contain the following minimum elements:

1. The CHSP shall identify all standards, guidance, publications, and sources on which it is based. Those standards may include references to OHSA, WISHA, and CDC publications that are current at the time the CHSP is prepared.

2. The CHSP shall identify a responsible individual from the Contractor who is responsible for implementation of the CHSP. The individual(s) contact information shall be listed in the CHSP.

3. The CHSP shall specifically identify the project for which it is applicable, and if applicable, shall address project work areas outside the project limits such as staging areas or yards.

4. The CHSP shall identify the PPE and administrative and engineered controls necessary to maintain a safe site. This includes but is not limited to: sanitation resources, screening stations, safety briefings, controlling access, and personal protective equipment (PPE) needed to protect workers from COVID-19.

5. The CHSP shall identify measures for screening and managing workers or visitors to areas identified in the CHSP. The plan shall include procedures should a person exhibit symptoms of COVID-19.

INFORMATIONAL COPY ONLY - NOT FOR BIDDING

6. The CHSP shall identify how the plan will be updated as new work activities are added with each two week look-ahead schedule. The CHSP updates shall identify the number of workers, crews, work tasks, and the degree of congestion or confinement workers will experience for the work activities in the two week look-ahead schedule.

7. The CHSP shall include how the Contractor will ensure everyone on the site has been trained on the CHSP requirements. This includes subcontractors, suppliers, and anyone on the project site.

COVID-19 Health and Safety Plan (CHSP) Inspection
The Contractor shall grant full and unrestricted access to the Engineer for CHSP Inspections. The Engineer (or designee) will conduct periodic compliance inspections on the project site, staging areas, or yards to verify that any ongoing work activity is following the CHSP plan. If the Engineer becomes aware of a noncompliance incident either through a site inspection or other means, the Contractor will be notified immediately (within 1 hour). The Contractor shall immediately remedy the noncompliance incident or suspend all or part of the associated work activity. The Contractor shall satisfy the Engineer that the noncompliance incident has been corrected before the suspension will end.

1-07.7 Load Limits

Section 1-07.7 is supplemented with the following:

(March 13, 1995)

If the sources of materials provided by the Contractor necessitates hauling over roads other than State Highways, the Contractor shall, at the Contractor's expense, make all arrangements for the use of the haul routes.

1-07.9 Wages

General

Section 1-07.9(1) is supplemented with the following:

The State rates incorporated in this contract are applicable to all construction activities associated with this contract.

INFORMATIONAL COPY ONLY - NOT FOR BIDDING

Required Documents
Section 1-07.9(5) is revised to read:

(January 6, 2020)
All "Statements of Intent to Pay Prevailing Wages", "Affidavit of Wages Paid" and Certified Payrolls, including a signed Statement of Compliance for Federal-aid projects, shall be submitted to the Engineer using the State L&I online Prevailing Wage Intent & Affidavit (PWIA) system.

Intents and Affidavits
On forms provided by the Industrial Statistician of State L&I, the Contractor shall submit to the Engineer the following for themselves and for each firm covered under RCW 39.12 that will or has provided Work and materials for the Contract.

1. The approved "Statement of Intent to Pay Prevailing Wages" State L&I"s form number F700-029-000. The contracting agency will make no payment under this Contract until this statement has been approved by State L&I and reviewed by the Engineer.
2. The approved "Affidavit of Prevailing Wages Paid", State L&I's form number F700-007-000. The Contracting Agency will not grant Completion until all approved Affidavit of Wages paid for the Contractor and all Subcontractors have been received by the Engineer. The Contracting Agency will not release to the Contractor any funds retained under RCW 60.28.011 until "Affidavit of Prevailing Wages Paid" forms have been approved by State L&I and all of the approved forms have been submitted to the Engineer for every firm that worked on the Contract.

The Contractor is responsible for requesting these forms from State L&I and for paying any fees required by State L&I.

Certified Payrolls
Certified payrolls are required to be submitted by the Contractor for themselves, all Subcontractors and all lower tie subcontractors. The payrolls shall be submitted weekly on all Federal-aid projects and no less than monthly on State Funded projects.

Penalties for Noncompliance
The Contractor is advised, if these payrolls are not supplied within the prescribed deadlines, any or all payments may be withheld until compliance is achieved. In addition, failure to provide these payrolls may result in other sanctions as provided by State laws (RCW 39.12.050) and/or Federal regulations (29 CFR5.12)

1-07.13 Contractor's Responsibility for Work

General
Section 1-17.13(1) is supplemented with the following:

(******)
The Project will be <u>open</u> to thru traffic (landowners, businesses adjacent to project, emergency services, etc. will be allowed). Contractor shall maintain access to business and residential properties. These accesses shall be accessible to the necessary vehicle types at all times, unless otherwise approved by the Engineer. The contractor will be allowed to close Stratford Road from 12-NE to 15-NE after Crushed Surfacing Top Course is in place and ready for final processing by the contractor.

INFORMATIONAL COPY ONLY - NOT FOR BIDDING

Repair of Damage
Section 1-07.13(4) is revised to read:

(August 6, 2001)
The Contractor shall promptly repair all damage to either temporary or permanent work as directed by the Engineer. For damage qualifying for relief under Sections 1-07.13(1), 1-07.13(2), or 1-07.13(3), payment will be made in accordance with Section 1-04.4. Payment will be limited to repair of damaged work only. No payment will be made for delay or disruption of work.

1-07.17 Utilities And Similar Facilities

Section 1-07.17 is supplemented with the following:

(******)
Locations and dimensions shown in the Plans for existing facilities are in accordance with available information obtained without uncovering, measuring, or other verification.

Public and private utilities, or their Contractors, will furnish all work necessary to adjust, relocate, replace, or construct their facilities unless otherwise provided for in the Plans or these Special Provisions. Such adjustment, relocation, replacement, or construction will be done during the prosecution of the work for this project.

The Contractor shall call the Utility Location Request Center (One Call Center), for field location, not less than two nor more than ten business days before the scheduled date for commencement of excavation which may affect underground utility facilities, unless otherwise agreed upon by the parties involved. A business day is defined as any day other than Saturday, Sunday, or a legal local, State, or Federal holiday. The telephone number for the One Call Center for this project is 1-800-424-5555. If no one-number locator service is available, notice shall be provided individually to those owners known to or suspected of having underground facilities within the area of proposed excavation.

The Contractor is alerted to the existence of Chapter 19.122 RCW, a law relating to underground utilities. Any cost to the Contractor incurred as a result of this law shall be at the Contractor's expense.

No excavation shall begin until all known facilities, in the vicinity of the excavation area, have been located and marked.

The Contractor can go to the following web site to find any changes to the Washington dig law that took effect in 2013.
http://www.utc.wa.gov/publicSafety/pipelineSafety/Pages/CallBeforeYouDig-DigLaw.aspx

The Contractor shall attend a mandatory preconstruction meeting with the Project Engineer, all affected Subcontractors, and all utility owners and their Contractors prior to beginning onsite work.

The following addresses and telephone numbers of utility companies and other agencies known or suspected of having facilities within the project limits are supplied for the Contractor's convenience:

INFORMATIONAL COPY ONLY - NOT FOR BIDDING

- Grant County PUD, Jaime Esparza
  30 C Street SW,
  Ephrata, WA 98823, (509) 754-5088 Ext. 2156
  jesparz@gcpud.org
- CenturyLink, Mike Brown
  Phone (509) 839-6651; Fax (509) 839-6625;
  mike.brown@centurylink.com
- East Columbia Basin Irrigation District, Nate Andreini
  nandreini@ecbid.org>

(******)

Vibratory Rollers over USBR Crossings

Vibratory rollers shall not be used within 50 feet on each side of each USBR crossing as staked in the field.

1-07.18 Public Liability and Property Damage Insurance

Delete this section in its entirety, and replace it with the following:

1-07.18 Insurance

(January 4, 2016 APWA GSP)

1-07.18(1) General Requirements

A. The Contractor shall procure and maintain the insurance described in all subsections of section 1-07.18 of these Special Provisions, from insurers with a current A. M. Best rating of not less than A-: VII and licensed to do business in the State of Washington. The Contracting Agency reserves the right to approve or reject the insurance provided, based on the insurer's financial condition.

B. The Contractor shall keep this insurance in force without interruption from the commencement of the Contractor's Work through the term of the Contract and for thirty (30) days after the Physical Completion date, unless otherwise indicated below.

C. If any insurance policy is written on a claims made form, its retroactive date, and that of all subsequent renewals, shall be no later than the effective date of this Contract. The policy shall state that coverage is claims made, and state the retroactive date. Claims-made form coverage shall be maintained by the Contractor for a minimum of 36 months following the Completion Date or earlier termination of this Contract, and the Contractor shall annually provide the Contracting Agency with proof of renewal. If renewal of the claims made form of coverage becomes unavailable, or economically prohibitive, the Contractor shall purchase an extended reporting period ("tail") or execute another form of guarantee acceptable to the Contracting Agency to assure financial responsibility for liability for services performed.

D. The Contractor's Automobile Liability, Commercial General Liability and Excess or Umbrella Liability insurance policies shall be primary and non-contributory insurance as respects the Contracting Agency's insurance, self-insurance, or self-insured pool coverage. Any insurance, self-insurance, or self-insured pool coverage maintained by the Contracting Agency shall be excess of the Contractor's insurance and shall not contribute with it.

E. The Contractor shall provide the Contracting Agency and all additional insureds with written notice of any policy cancellation, within two business days of their receipt of such notice.

INFORMATIONAL COPY ONLY - NOT FOR BIDDING

F. The Contractor shall not begin work under the Contract until the required insurance has been obtained and approved by the Contracting Agency

G. Failure on the part of the Contractor to maintain the insurance as required shall constitute a material breach of contract, upon which the Contracting Agency may, after giving five business days' notice to the Contractor to correct the breach, immediately terminate the Contract or, at its discretion, procure or renew such insurance and pay any and all premiums in connection therewith, with any sums so expended to be repaid to the Contracting Agency on demand, or at the sole discretion of the Contracting Agency, offset against funds due the Contractor from the Contracting Agency.

H. All costs for insurance shall be incidental to and included in the unit or lump sum prices of the Contract and no additional payment will be made.

1-07.18(2) Additional Insured

All insurance policies, with the exception of Workers Compensation, and of Professional Liability and Builder's Risk (if required by this Contract) shall name the following listed entities as additional insured(s) using the forms or endorsements required herein:

- the Contracting Agency and its officers, elected officials, employees, agents, and volunteers

The above-listed entities shall be additional insured(s) for the full available limits of liability maintained by the Contractor, irrespective of whether such limits maintained by the Contractor are greater than those required by this Contract, and irrespective of whether the Certificate of Insurance provided by the Contractor pursuant to 1-07.18(4) describes limits lower than those maintained by the Contractor.

For Commercial General Liability insurance coverage, the required additional insured endorsements shall be at least as broad as ISO forms CG 20 10 10 01 for ongoing operations and CG 20 37 10 01 for completed operations.

1-07.18(3) Subcontractors

The Contractor shall cause each Subcontractor of every tier to provide insurance coverage that complies with all applicable requirements of the Contractor-provided insurance as set forth herein, except the Contractor shall have sole responsibility for determining the limits of coverage required to be obtained by Subcontractors.

The Contractor shall ensure that all Subcontractors of every tier add all entities listed in 1-07.18(2) as additional insureds, and provide proof of such on the policies as required by that section as detailed in 1-07.18(2) using an endorsement as least as broad as ISO CG 20 10 10 01 for ongoing operations and CG 20 37 10 01 for completed operations.

Upon request by the Contracting Agency, the Contractor shall forward to the Contracting Agency evidence of insurance and copies of the additional insured endorsements of each Subcontractor of every tier as required in 1-07.18(4) Verification of Coverage.

1-07.18(4) Verification of Coverage

The Contractor shall deliver to the Contracting Agency a Certificate(s) of Insurance and endorsements for each policy of insurance meeting the requirements set forth herein when the

INFORMATIONAL COPY ONLY - NOT FOR BIDDING

Contractor delivers the signed Contract for the work. Failure of Contracting Agency to demand such verification of coverage with these insurance requirements or failure of Contracting Agency to identify a deficiency from the insurance documentation provided shall not be construed as a waiver of Contractor's obligation to maintain such insurance.

Verification of coverage shall include:

1. An ACORD certificate or a form determined by the Contracting Agency to be equivalent.
2. Copies of all endorsements naming Contracting Agency and all other entities listed in 1-07.18(2) as additional insured(s), showing the policy number. The Contractor may submit a copy of any blanket additional insured clause from its policies instead of a separate endorsement.
3. Any other amendatory endorsements to show the coverage required herein.
4. A notation of coverage enhancements on the Certificate of Insurance shall not satisfy these requirements – actual endorsements must be submitted.

Upon request by the Contracting Agency, the Contractor shall forward to the Contracting Agency a full and certified copy of the insurance policy(s). If Builders Risk insurance is required on this Project, a full and certified copy of that policy is required when the Contractor delivers the signed Contract for the work.

1-07.18(5) Coverages and Limits

The insurance shall provide the minimum coverages and limits set forth below. Contractor's maintenance of insurance, its scope of coverage, and limits as required herein shall not be construed to limit the liability of the Contractor to the coverage provided by such insurance, or otherwise limit the Contracting Agency's recourse to any remedy available at law or in equity.

All deductibles and self-insured retentions must be disclosed and are subject to approval by the Contracting Agency. The cost of any claim payments falling within the deductible or self-insured retention shall be the responsibility of the Contractor. In the event an additional insured incurs a liability subject to any policy's deductibles or self-insured retention, said deductibles or self-insured retention shall be the responsibility of the Contractor.

1-07.18(5)A Commercial General Liability

Commercial General Liability insurance shall be written on coverage forms at least as broad as ISO occurrence form CG 00 01, including but not limited to liability arising from premises, operations, stop gap liability, independent contractors, products-completed operations, personal and advertising injury, and liability assumed under an insured contract. There shall be no exclusion for liability arising from explosion, collapse or underground property damage.

The Commercial General Liability insurance shall be endorsed to provide a per project general aggregate limit, using ISO form CG 25 03 05 09 or an equivalent endorsement.

Contractor shall maintain Commercial General Liability Insurance arising out of the Contractor's completed operations for at least three years following Substantial Completion of the Work.

Such policy must provide the following minimum limits:

$1,000,000 Each Occurrence
$2,000,000 General Aggregate
$2,000,000 Products & Completed Operations Aggregate
$1,000,000 Personal & Advertising Injury each offence

INFORMATIONAL COPY ONLY - NOT FOR BIDDING

$1,000,000 Stop Gap / Employers' Liability each accident

1-07.18(5)B Automobile Liability

Automobile Liability shall cover owned, non-owned, hired, and leased vehicles; and shall be written on a coverage form at least as broad as ISO form CA 00 01. If the work involves the transport of pollutants, the automobile liability policy shall include MCS 90 and CA 99 48 endorsements.

Such policy must provide the following minimum limit:

$1,000,000 Combined single limit each accident

1-07.18(5)C Workers' Compensation

The Contractor shall comply with Workers' Compensation coverage as required by the Industrial Insurance laws of the State of Washington.

Section 1-07.18 is supplemented with the following:

1-07.23 Public Convenience and Safety

Construction Under Traffic

Section 1-07.23(1) is supplemented with the following:

(January 2, 2012)
Work Zone Clear Zone

The Work Zone Clear Zone (WZCZ) applies during working and nonworking hours. The WZCZ applies only to temporary roadside objects introduced by the Contractor's operations and does not apply to preexisting conditions or permanent Work. Those work operations that are actively in progress shall be in accordance with adopted and approved Traffic Control Plans, and other contract requirements.

During nonworking hours equipment or materials shall not be within the WZCZ unless they are protected by permanent guardrail or temporary concrete barrier. The use of temporary concrete barrier shall be permitted only if the Engineer approves the installation and location.

During actual hours of work, unless protected as described above, only materials absolutely necessary to construction shall be within the WZCZ and only construction vehicles absolutely necessary to construction shall be allowed within the WZCZ or allowed to stop or park on the shoulder of the roadway.

The Contractor's nonessential vehicles and employees private vehicles shall not be permitted to park within the WZCZ at any time unless protected as described above.

Deviation from the above requirements shall not occur unless the Contractor has requested the deviation in writing and the Engineer has provided written approval.

Minimum WZCZ distances are measured from the edge of traveled way and will be determined as follows:

Regulatory	Distance from

INFORMATIONAL COPY ONLY - NOT FOR BIDDING

Posted Speed	Traveled Way (Feet)
35 mph or less	10 *
40 mph	15
45 to 55 mph	20
60 mph or greater	30

* or 2-feet beyond the outside edge of sidewalk

Minimum Work Zone Clear Zone Distance

(******)

Payment

No additional compensation will be paid to the Contractor for any cost or expense incurred as a result of the requirements of this provision and all costs shall be considered incidental to and included in other applicable contract items.

1-08 PROSECUTION AND PROGRESS

Add the following new section:

1-08.0 Preliminary Matters

(May 25, 2006 APWA GSP)

Add the following new section:

1-08.0(1) Preconstruction Conference

(October 10, 2008 APWA GSP)

Prior to the Contractor beginning the work, a preconstruction conference will be held between the Contractor, the Engineer and such other interested parties as may be invited. The purpose of the preconstruction conference will be:

1. To review the initial progress schedule;
2. To establish a working understanding among the various parties associated or affected by the work;
3. To establish and review procedures for progress payment, notifications, approvals, submittals, etc.;
4. To establish normal working hours for the work;
5. To review safety standards and traffic control; and
6. To discuss such other related items as may be pertinent to the work.

The Contractor shall prepare and submit at the preconstruction conference the following:

1. A breakdown of all lump sum items;
2. A preliminary schedule of working drawing submittals; and
3. A list of material sources for approval if applicable.

Add the following new section:

1-08.0(2) Hours of Work

INFORMATIONAL COPY ONLY - NOT FOR BIDDING

(******)

Except in the case of emergency or unless otherwise approved by the Contracting Agency, the normal straight time working hours for the Contract shall be any consecutive 8-hour period between 7:00 a.m. and 6:00 p.m. of a working day with a maximum 1-hour lunch break and a 5-day work week. The normal straight time 8-hour working period for the Contract shall be established at the preconstruction conference or prior to the Contractor commencing the work.

Written permission from the Engineer is required, if a Contractor desires to perform work on holidays, Saturdays, or Sundays; before 7:00 a.m. or after 6:00 p.m. on any day; or longer than an 8-hour period on any day. The Contractor shall apply in writing to the Engineer for such permission, no later than noon on the working day prior to the day for which the Contractor is requesting permission to work.

Permission to work Saturdays, Sundays, holidays, or other than the agreed upon normal straight time working hours Monday through Friday may be given subject to certain other conditions set forth by the Contracting Agency or Engineer. These conditions may include but are not limited to:

- The Engineer may require designated representatives to be present during the work. Representatives who may be deemed necessary by the Engineer include, but are not limited to: survey crews; personnel from the Contracting Agency's material testing lab; inspectors; and other Contracting Agency employees when in the opinion of the Engineer, such work necessitates their presence.
- On non-Federal aid projects, requiring the Contractor to reimburse the Contracting Agency for the costs in excess of straight-time costs for Contracting Agency representatives who worked during such times.
- Considering the work performed on Saturdays, Sundays, and holidays as working days with regard to the contract time.
- Considering multiple work shifts as multiple working days with respect to contract time, even though the multiple shifts occur in a single 24-hour period.

1-08.1 Subcontracting

(December 19, 2019 APWA GSP, Option A)

Prior to any subcontractor or lower tier subcontractor beginning work, the Contractor shall submit to the Engineer a certification (WSDOT Form 420-004) that a written agreement between the Contractor and the subcontractor or between the subcontractor and any lower tier subcontractor has been executed. This certification shall also guarantee that these subcontract

INFORMATIONAL COPY ONLY - NOT FOR BIDDING

agreements include all the documents required by the Special Provision Federal Agency Inspection.

A Subcontractor or lower tier Subcontractor will not be permitted to perform any work under the contract until the following documents have been completed and submitted to the Engineer:

1. Request to Sublet Work (WSDOT Form 421-012), and
2. Contractor and Subcontractor or Lower Tier Subcontractor Certification for Federal-aid Projects (WSDOT Form 420-004).

The Contractor shall submit to the Engineer a completed Monthly Retainage Report (WSDOT Form 272-065) within 15 calendar days after receipt of every monthly progress payment until every Subcontractor and lower tier Subcontractor's retainage has been released.

The ninth paragraph, beginning with "On all projects, ..." is revised to read:

The Contractor shall certify to the actual amount received from the Contracting Agency and amounts paid to all firms that were used as Subcontractors, lower tier subcontractors, manufacturers, regular dealers, or service providers on the Contract. This includes all Disadvantaged, Minority, Small, Veteran or Women's Business Enterprise firms. This Certification shall be submitted to the Engineer on a monthly basis each month between Execution of the Contract and Physical Completion of the Contract using the application available at: https://wsdot.diversitycompliance.com. A monthly report shall be submitted for every month between Execution of the Contract and Physical Completion regardless of whether payments were made or work occurred.

Subcontract Completion and Return of Retainage Withheld

Section 1-08.1(1) is revised to read:

(August 4, 2014)
The following procedures shall apply to all subcontracts entered into as a part of this Contract:

Requirements

1. The Prime Contractor or Subcontractor shall make payment to the Subcontractor not later than ten days after receipt of payment from the Contracting Agency for work satisfactorily completed by the Subcontractor, to the extent of each Subcontractor's interest therein.

2. Prompt and full payment of retainage from the Prime Contractor to the Subcontractor shall be made within 30 days after Subcontractor's Work is satisfactorily completed.

3. For purposes of this Section, a Subcontractor's work is satisfactorily completed when all task and requirements of the Subcontract have been accomplished and including any required documentation and material testing.

4. Failure by a Prime Contractor or Subcontractor to comply with these requirements may result in one or more of the following:

   a. Withholding of payments until the Prime Contractor or Subcontractor complies

   b. Failure to comply shall be reflected in the Prime Contractor's Performance Evaluation

INFORMATIONAL COPY ONLY - NOT FOR BIDDING

c. Cancellation, Termination, or Suspension of the Contract, in whole or in part

d. Other sanctions as provided by the subcontract or by law under applicable prompt pay statutes.

Conditions

This clause does not create a contractual relationship between the Contracting Agency and any Subcontractor as stated in Section 1-08.1. Also, it is not intended to bestow upon any Subcontractor, the status of a third-party beneficiary to the Contract between the Contracting Agency and the Contractor.

Payment

The Contractor will be solely responsible for any additional costs involved in paying retainage to the Subcontractors. Those costs shall be incidental to the respective Bid Items.

1-08.4 Prosecution Of Work

The first sentence of Section 1-08.4 is revised to read:

(******)
The Contractor shall begin work on **June 8, 2020**, unless otherwise approved by the Engineer.

1-08.5 Time For Completion

The third paragraph of Section 1-08.5 is revised to read:

(******)
Contract time shall begin on the first working day. The first working day shall be June 8, 2020, unless otherwise approved by the Engineer.

Section 1-08.5 is supplemented with the following:

(March 13, 1995)
This project shall be physically completed within **55 working days**.

1-08.9 Liquidated Damages

(August 14, 2013 APWA GSP)

Revise the fourth paragraph to read:

When the Contract Work has progressed to Substantial Completion as defined in the Contract, the Engineer may determine that the work is Substantially Complete. The Engineer will notify the Contractor in writing of the Substantial Completion Date. For overruns in Contract time occurring after the date so established, the formula for liquidated damages shown above will not apply. For overruns in Contract time occurring after the Substantial Completion Date, liquidated damages shall be assessed on the basis of direct engineering and related costs assignable to the project until the actual Physical Completion Date of all the Contract Work. The Contractor shall complete the remaining Work as promptly as possible. Upon request by the Project Engineer, the Contractor shall furnish a written schedule for completing the physical Work on the Contract.

INFORMATIONAL COPY ONLY - NOT FOR BIDDING

1-09 MEASUREMENT AND PAYMENT

Payments

Section 1-09.9 is supplemented with the following:

(March 13, 1995)
The quantity of the following items to be paid for on this project shall be the quantity shown in the Proposal, unless changes are made in accordance with Section 1-04.4 which affect this quantity. The quantity shown in the Proposal will be adjusted by the amount of the change and will be paid for as specified in Section 1-04.4.

*** "Roadway Excavation Incl. Haul", "Embankment Compaction"***

The quantities in the Proposal are listed only for the convenience of the Contractor in determining the volume of work involved and are not guaranteed to be accurate. The prospective bidders shall verify these quantities before submitting a bid. No adjustments other than for approved changes will be made in the quantity even though the actual quantities required may deviate from those listed.

The unit contract price for these items shall be full pay to construct and complete this portion of the work.

1-09.13 Claims Resolution

1-09.13(3) Claims $250,000 or Less
(October 1, 2005 APWA GSP)

Delete this Section and replace it with the following:

The Contractor and the Contracting Agency mutually agree that those claims that total $250,000 or less, submitted in accordance with Section 1-09.11 and not resolved by nonbinding ADR processes, shall be resolved through litigation unless the parties mutually agree in writing to resolve the claim through binding arbitration.

1-09.13(3)A Administration of Arbitration
(October 1, 2005 APWA GSP)

Revise the third paragraph to read:

The Contracting Agency and the Contractor mutually agree to be bound by the decision of the arbitrator, and judgment upon the award rendered by the arbitrator may be entered in the Superior Court of <u>the county in which the Contracting Agency's headquarters are located</u>. The decision of the arbitrator and the specific basis for the decision shall be in writing. The arbitrator shall use the contract as a basis for decisions.

1-10 TEMPORARY TRAFFIC CONTROL

1-10.1 General

INFORMATIONAL COPY ONLY - NOT FOR BIDDING

Section 1-10.1 is supplemented with the following:

(April 1, 2013)
The Contracting Agency will provide the following labor, equipment and/or materials resources to the Contractor for use on the project.

*** Class A Traffic Signs as outlined in the included Construction Sign Plan and Sign Table ***

The Contractor shall notify the Project Engineer when each resource is to be utilized and shall provide a minimum of *** 5 (five) *** working days advance notice to allow any necessary arrangements to be made.

1-10.2 Traffic Control Management

General

Section 1-10.2(1) is supplemented with the following:

(December 1, 2008)
Only training with WSDOT TCS card and WSDOT training curriculum is recognized in the State of Washington. The Traffic Control Supervisor shall be certified by one of the following:

The Northwest Laborers-Employers Training Trust
27055 Ohio Ave.
Kingston, WA 98346
(360) 297-3035

Evergreen Safety Council
401 Pontius Ave. N.
Seattle, WA 98109
1-800-521-0778 or (206) 382-4090

The American Traffic Safety Services Association
15 Riverside Parkway, Suite 100
Fredericksburg, Virginia 22406-1022
Training Dept. Toll Free (877) 642-4637
Phone: (540) 368-1701

1-10.2(2) Traffic Control Plans

Section 1-10.2(2) is supplemented with the following:

(******)
The County has provided the Traffic Sign Plan for this project and said plan(s) are included in these specifications and is made part of this contract.

The work contemplated in this contract will require the Contractor to take special precautions in implementing safe traffic control procedures in accordance with the MUTCD. The Contractor's attention is directed to WAC 296-155-305 as it relates to signing, signaling and flaggers. All questions concerning new standards should be directed to the Wash. State Dept. of Labor and Industries.

INFORMATIONAL COPY ONLY - NOT FOR BIDDING

The Contractor will only be permitted to close Stratford Road during the final processing of the Crushed Surfacing Top Course. At all times, one-way traffic must be kept open during working hours and two-way traffic must be restored at the end of each working day for local traffic. Access to County road intersections, local farms and residences shall be kept open at all times.

1-10.3 Traffic Control Labor, Procedures and Devices

1-10.3(3) Traffic Control Devices

Construction Signs

Section 1-10.3(3)A is supplemented with the following:

(******)
The required signs will be available to the Contractor at the Grant County Sign Shop, 124 Enterprise St. SE, Ephrata, WA, (509) 754-6082, on normal work days. The Contractor shall make arrangements with the Engineer at least five working days prior to picking up the signs. The Contractor shall sign an itemized receipt at the time of acquisition.

Signs shall be taken down and returned to Grant County Sign Shop by the Contractor when their need has ceased as determined by the Engineer. Due to County Force BST placement on this project, the signs will likely stay up until after those operations have ceased. The value of signs furnished by the Contracting Agency to the Contractor is fixed at $10.00 per square foot. The value of such signs which are damaged or not returned as provided in Sections 1-10.1 and 1-10.3(3)A will be deducted from payment due or to become due the Contractor.

Wood Sign Posts
Use the charts below to determine post size for Class A construction signs.

One Post Installation

Post Size	Min. Sign Sq. Ft.	Max Sign Sq. Ft.
4x4	-	16.0
4x6	17.0	20.0
6x6	21.0	25.0
6x8	26.0	31.0

Two Post Installation
(For signs 5 feet or greater in width)

Post Size	Min. Sign Sq. Ft.	Max Sign Sq. Ft.
4x4	-	16.0
4x6	17.0	36.0
6x6	37.0	46.0
6x8	47.0	75.0 *

* The Engineer will determine the post size for signs greater than 75 square feet.

INFORMATIONAL COPY ONLY - NOT FOR BIDDING

Barricades

Section 1-10.3(3)D is supplemented with the following:

(******)
The barricades, provided by the contractor, shall be Type III and constructed in accordance with the details shown in the MUTCD and the Standard Plans. The barricade width shall be eight (8) feet.

As may be indicated in the Signing Plan, Traffic Control Plans, or the Contract Provisions, the Contractor may be required to install signs, warning lights, or both, on barricades.

1-10.4 Measurement

Section 1-10.4 is supplemented with the following:

(******)
No unit of measurement will be made for any of the items contained in the Traffic Control Plan or Section 1-10 of the Standard Specifications.

1-10.5 Payment

Section 1-10.5(1) is supplemented with the following:

(******)
No additional compensation will be paid to the Contractor for any cost or expense incurred as a result of the requirements of this provision and all costs shall be considered incidental to and included in other applicable contract items.

DIVISION 2 EARTHWORK

2-01 CLEARING, GRUBBING, AND ROADSIDE CLEANUP

2-01.1 Description

Section 2-01.1 is supplemented with the following:

(March 13,1995)
Clearing and grubbing on this project shall be performed within the 80 foot County right of way the entire length of the project. All trees and fences located within this right of way shall be removed by the contractor.

2-01.5 Payment

Section 2-01.5 is supplemented with the following:

(******)
The lump sum price for "Clearing and Grubbing" shall be full pay for all work described in this section.

REMOVAL OF STRUCTURES AND OBSTRUCTIONS

INFORMATIONAL COPY ONLY - NOT FOR BIDDING

2-02 REMOVAL OF PAVEMENT, SIDEWALKS, AND CURBS

Section 2-02.3(3) is supplemented with the following:

(******)

Rotomilling Bituminous Pavement

The Contractor shall rotomill all existing bituminous pavements to full depth. The Contractor shall provide equipment capable of producing planings 2 inches in diameter or smaller. All sections planed on any given day shall be uniformly spread, watered, and re-compacted to a non-yielding surface over the existing subgrade by the end of the work day and re-graded, if necessary, to the staked line and grade before placement of crushed surfacing materials.

The equipment used to rotomill existing bituminous pavements shall be capable of rotomilling a minimum of 72" in a single pass, capable of working at a mixing depth of at least 6" without producing skips and work at a traveling speed of 1 mph or more.

Payment

Section 2-02.5 is supplemented with the following:

(******)

"Rotomilling Bituminous Pavement", per square yard.

2-03 ROADWAY EXCAVATION AND EMBANKMENT

Construction Requirements

Disposal Of Surplus Material

Section 2-03.3(7)A is supplemented with the following:

(******)

A waste site has not been provided by the County for the disposal of excess material.

Measurement

Section 2-03.4 is supplemented with the following:

(March 13, 1995)

Only one determination of the original ground elevation will be made on this project. Measurement for roadway excavation and embankment will be based on the original ground elevations recorded previous to the award of this contract.

If discrepancies are discovered in the ground elevations which will materially affect the quantities of earthwork, the original computations of earthwork quantities will be adjusted accordingly.

Earthwork quantities will be computed, either manually or by means of electronic data processing equipment, by use of the average end area method or by the finite element analysis method utilizing digital terrain modeling techniques.

Copies of the ground cross-section notes will be available for the bidder's inspection, before the opening of bids, at the Engineer's office and at the Region office.

INFORMATIONAL COPY ONLY - NOT FOR BIDDING

Upon award of the contract, copies of the original ground cross-sections will be furnished to the successful bidder on request to the Project Engineer.

(******)
Sub Excavation (Including Haul) will be measured by comparing the difference between the planned finish subgrade and the field measurement of the excavated area below subgrade.

(******)
Only one determination of the original ground elevation will be made on this project. Measurement for roadway excavation and embankment will be based on the original ground elevations recorded previous to the award of this contract. Control stakes will be set prior and during construction to provide the Contractor with all essential information for the construction of excavation and embankments. **If the Contractor elects to utilize Machine Controlled Equipment on this project, quantity measurements and adjustments will not be allowed with such equipment**.

2-06 SUBGRADE PREPARATION

Construction Requirements

Subgrade For Pavement
Section 2-06.3(2) is supplemented with the following:

(******)
The contractor shall not use the vibratory roller within **50'** of underground utility crossing (pipeline), siphons, bridges and drainage structures on the project as staked by the Engineer. The contractor will be allowed to use the vibratory roller over culverts located within the project limits.

2-07 WATERING

Description
Section 2-07.1 is supplemented with the following:

(2010 AdCo GSP)
Dust Control
The Contractor shall, at all times during construction, maintain proper dust control in accordance with the requirements of WAC 173-400-040 and the State of Washington Department of Ecology, Eastern Regional Office, Spokane, Washington. Water for dust control and all other construction activities shall be furnished by the Contractor. The Contractor shall pay all associated costs to provide the water and the cost shall be included in and incidental to the unit contract prices of the various bid items involved. It is required that the Contractor have one person at the job site during construction hours who is responsible for dust control. In addition, one person will be available during non-working hours and shall have equipment and manpower available to control dust. Any problems caused by dust from the construction site will be cause for immediate shutdown of all operations except dust control.

DIVISION 4 BASES

4-04 BALLAST AND CRUSHED SURFACING

INFORMATIONAL COPY ONLY - NOT FOR BIDDING

Construction Requirements

Equipment

The first sentence of Section 4-04.3(1) is revised to read:

(******)
All equipment necessary for the satisfactory performance of this construction shall be on the project and approved by the Engineer prior to beginning work. The Contractor shall demonstrate that equipment of sufficient size, number, and reliability has been provided to meet the project schedule submitted by the Contractor, if requested by the Engineer.

Placing and Spreading

The third paragraph of Section 4-04.3(4) is supplemented with the following:

(******)
The Contractor shall fill each hauling vehicle with the same quantity of crushed aggregate. This is necessary in order to provide consistent spreads within the limits of the specific section determined by the Engineer.

The Contractor shall place the material in such a way as to minimize the impact of the hauling vehicles. Hauling over any of the surfacing materials prior to processing shall not be permitted.

Miscellaneous Requirement

The second sentence of the first paragraph of Section 4-04.3(7) is revised to read:

(******)
Each course of surfacing material shall be placed in its entirety before placing the succeeding course unless otherwise authorized by the Engineer. The Contractor shall repair any segregated areas by reprocessing the effected section of each course before placing any additional material.

DIVISION 7 DRAINAGE STRUCTURES,STORM SEWERS, SANITARY SEWERS, WATER MAINS, AND CONDUITS

7-02 CULVERTS

Payment
(******)
The unit contract price bid per Linear Foot of Plain Steel Culvert Pipe 0.064" Th. – 12" Diameter and Plain Steel Culvert Pipe 0.064" Th. – 18" Diameter, shall be full compensation for performing the work outlined herein and in accordance with the plans and specifications and shall also include the cost for "Structure Excavation Class "B", and Gravel Backfill For Pipe Zone Bedding".

INFORMATIONAL COPY ONLY - NOT FOR BIDDING

DIVISION 8 MISCELLANEOUS CONSTRUCTION

8-01 EROSION CONTROL AND WATER POLLUTION CONTROL

Construction Requirements

General

The tenth paragraph of Section 8-01.3(1) is revised to read:

(January 25, 2010)
Erodible Soil Eastern Washington
Erodible soil not being worked whether at final grade or not, shall be covered within the following time period using an approved soil cover practice:

July 1 through September 30	30 days
October 1 through June 30	15 days

Submittals

The first sentence of Section 8-01.3(1)A is revised to read:

The contractor shall prepare and submit a TESC plan for the engineer's approval.

Mulching

Section 8-01.3(2)D is supplemented with the following:

(******)
A 50%/50% mix of Wood cellulose fiber suitable for use with a hydroseeder and Hydro-Straw with Tackifier (Hydrostraw Guar Plus or approved equal) shall be applied at a rate of 2,000 pounds per acre. 50/50 mix shall be sufficiently mixed in the truck prior to application.

MONUMENT

Construction Requirements

(******)
Section 8-13.3 is supplemented with the following:

All work shall be performed by a licensed surveyor.

The Contractor shall be required to set or reset monuments and monument case and covers at right of way points of intersection, curvature, and tangency within the project limits and as shown on the plans. Pursuant to RCW 58.24.040(8), a permit to remove or destroy a survey monument shall be acquired from the Washington State Dept. of Natural Resources for all existing survey monuments and markers.

The Contractor shall leave all existing monuments in place unless the road profile requires removal. When the new road profile requires the existing monument to be reset the Contractor shall reuse and reset existing monument and record a new elevation on the brass disc or provide a supplementary brass inset with new elevation stamped on the

INFORMATIONAL COPY ONLY - NOT FOR BIDDING

monument. The Contractor shall give the Engineer a certified report from the Surveyor regarding the final disposition and condition of all monuments discovered within the project limits.

Payment

(******)
The unit contract price bid per each for "Monument" shall be full compensation for performing the work outlined herein and in accordance with the plans and specifications.

PAVEMENT MARKING

Materials

(******)
The first sentence of Section 8-22.2 is replaced with the following:

Paint Material for pavement line shall be **Waterborne** paint and be chosen from WSDOT QPL listings for 9-34.2(5) – Pavement Marking – Low VOC Waterborne Paint.

Construction Requirements

Preliminary Spotting
The first sentence of Section 8-22.3(1) is replaced with the following:

(******)
The Contractor shall use established control points to assist in the preliminary spotting of the lines to be marked. Where control points are unavailable the Contractor shall establish such control as necessary to provide accurate preliminary spotting for pavement marking. The Engineer shall provide control points for no-pass zones.

Marking Application
Section 8-22.3(3) is supplemented with the following:

(******)
This contract contains new striping work and will require two applications of paint on a thoroughly swept pavement surface. 10 mils on the first pass and 15 mils on the second pass in the opposite direction. Glass beads for retro-reflective applications shall be applied at the rate of 7 pounds per gallon of paint.

The Contractor shall use a three gun paint spray system for all striping on this contract. Center skip stripe shall be based on the center gun, regardless of whether it is needed for a particular line, based on variable pass/no pass zones. In Double No-Pass zones, the two outer guns shall be used for the double yellow to be painted.

The striping on this project will be performed after Grant County crews have completed the BST surfacing.

INFORMATIONAL COPY ONLY - NOT FOR BIDDING

DIVISION 9 MATERIALS

9-14 EROSION CONTROL AND ROADSIDE PLANTING

9-14.2 Seed

Section 9-14.2 is supplemented with the following:

(******)

The following Roadside seed mix is approved for application on this project.

Kind and variety of Seed in mixture	% By Weight	Minimum % Pure Seed	Minimum % Germination
Special Eastern Washington Roadside Mix Containing*:			
Bluegrass, Sherman Big	10	9.5	70
Wheatgrass, Crested, Nordan	70	68.5	85
Wheatgrass, Thickspike, Critana	10	9.5	85
Sandburg	5	4.5	
Sheep Fescue	5	4.5	
Weed Seed		2.0 (max)	
Inert and other crop		3.5 (max)	
Total		100.0	

*Special Eastern Washington Roadside Mix shall be applied at the rate of twenty-one (21) pounds per acre on all areas to be seeded.

9-14.3 Fertilizer

Section 9-14.3 is supplemented with the following:

(******)

The Contractor shall use 16-16-16 slow release fertilizer, and it shall be applied at the rate of 125 pounds per acre.

(April 1, 2019)
Standard Plans

The State of Washington Standard Plans for Road, Bridge and Municipal Construction M21-01 transmitted under Publications Transmittal No. PT 16-048, effective August 6, 2018 is made a part of this contract.

INFORMATIONAL COPY ONLY - NOT FOR BIDDING

1
2
3
4
5

INFORMATIONAL COPY ONLY - NOT FOR BIDDING

PROPOSAL

To: Board of County Commissioners
Grant County, Washington

Date:_____, 2020

This certifies that the undersigned has examined the location of **STRATFORD ROAD RECONSTRUCTION PROJECT, CRP 17-06, in Grant County, Washington,** and that the plans, specifications and contract governing the work embraced in the improvement and the method by which payment will be made for said work is understood. The undersigned hereby proposes to undertake and complete the work embraced in this improvement, or as much thereof as can be completed with the money available in accordance with said plans, specifications and contract and at the following schedule of rates and prices.

STRATFORD ROAD RECONSTRUCTION PROJECT

Note: Unit prices for all items, all extensions, and total amount must be shown. Please type or use ink. Please initial all changes.

INFORMATIONAL COPY ONLY - NOT FOR BIDDING

Item No.	Plan Quantity	Item Description	Price per Unit* Dollars . Cents	Total Amount Dollars . Cents
PREPARATION				
1	1 Lump Sum	Mobilization	At ////////./////// Per Lump Sum	.
2	1 Lump Sum	Clearing and Grubbing	At ////////./////// Per Lump Sum	.
GRADING				
3	70,266 S.Y.	Rotomilling Bituminous Pavement	At . Per Square Yard	.
4	11,460 C.Y.	Roadway Excavation	At . Per Cubic Yard	.
5	7,006 C.Y.	Embankment Compaction	At . Per Cubic Yard	.
DRAINAGE				
6	341 L.F.	Plain Steel Culvert Pipe 0.064" Th. – 12" Diameter	At . Per Linear Foot	.

Item No.	Plan Quantity	Item Description	Price per Unit* Dollars . Cents	Total Amount Dollars . Cents
7	247 L.F.	Plain Steel Culvert Pipe 0.064" Th. – 18" Diameter	At . Per Linear Foot	.

SURFACING

8	29,350 Ton	Crushed Surfacing Base Course	At . Per Ton	
9	19,070 Ton	Crushed Surfacing Top Course	At . Per Ton	.

TRAFFIC

10	1,050 Lin. Ft.	Beam Guardrail Type 31	At . Per Linear Foot	.
11	4 Each	Beam Guardrail Type 31 – Non-Flared Terminal	At . Per Each	.
12	62,680 Lin. Ft.	Paint Line	At . Per Linear Foot	.

OTHER ITEMS

13	1 Lump Sum	SPCC Plan	At ////////// . ///// Per Lump Sum	.
14	8 Each	Monument	At . Each	.
15	1 Lump Sum	Trimming and Cleanup	At ////////// . ///// Per Lump Sum	.
16	8 Acre	Seeding, Fertilizing and Mulching, With Roadside Mix	At . Acre	.

INFORMATIONAL COPY ONLY - NOT FOR BIDDING

Item No.	Plan Quantity	Item Description	Price per Unit* Dollars . Cents	Total Amount Dollars . Cents
17	$1.00 Est.	Minor Change	At ////////./////// Est.	$1.00

Project Total	.

INFORMATIONAL COPY ONLY - NOT FOR BIDDING

Failure to return this Declaration as part of the bid proposal package will make the bid nonresponsive and ineligible for award.

NON-COLLUSION DECLARATION

I, by signing the proposal, hereby declare, under penalty of perjury under the laws of the United States that the following statements are true and correct:

1. That the undersigned person(s), firm, association, or corporation has (have) not, either directly or indirectly, entered into any agreement, participated in any collusion, or otherwise taken any action in restraint of free competitive bidding in connection with the project for which this proposal is submitted.

2. **That by signing the signature page of this proposal, I am deemed to have signed and have agreed to the provisions of this declaration.**

NOTICE TO ALL BIDDERS

To report bid rigging activities call:

1-800-424-9071

The U.S. Department of Transportation (USDOT) operates the above toll-free "hotline" Monday through Friday, 8:00 a.m. to 5:00 p.m., Eastern Time. Anyone with knowledge of possible bid rigging, bidder collusion, or other fraudulent activities should use the "hotline" to report such activities.

The "hotline" is part of USDOT's continuing effort to identify and investigate highway construction contract fraud and abuse and is operated under the direction of the USDOT Inspector General. All information will be treated confidentially and caller anonymity will be respected.

INFORMATIONAL COPY ONLY - NOT FOR BIDDING

Revised 6/14

From DOT Form 272-036I EF
07/2011

Certification of Compliance with Wage Payment Statutes

The bidder hereby certifies that, within the three-year period immediately preceding the bid solicitation date (7/25/2017), the bidder is not a "willful" violator, as defined in RCW 49.48.082, of any provision of chapters 49.46, 49.48, or 49.52 RCW, as determined by a final and binding citation and notice of assessment issued by the Department of Labor and Industries or through a civil judgment entered by a court of limited or general jurisdiction.

I certify under penalty of perjury under the laws of the State of Washington that the foregoing is true and correct.

_____
Bidder's Business Name

_____
Signature of Authorized Official*

_____
Printed Name

_____
Title

_____ _____ _____
Date City State

Check One:
Sole Proprietorship ☐ Partnership ☐ Joint Venture ☐ Corporation ☐

State of Incorporation or if not a corporation, State where business entity was formed:

_____

If a co-partnership, give firm name under which business is transacted:

_____

**** If a corporation, proposal must be executed in the corporate name by the president or vice-president (or any other corporate officer accompanied by evidence of authority to sign). If a co-partnership, proposal must be executed by a partner.***

INFORMATIONAL COPY ONLY - NOT FOR BIDDING

Proposal – Signature Page

The bidder is hereby advised that by signature of this proposal he/she is deemed to have acknowledged all requirements and signed all certificates contained herein.

A proposal guaranty in an amount of five percent (5%) of the total bid, based upon the approximate estimate of quantities at the above prices and in the form as indicated below, is attached hereto:

Cash	☐	In the Amount of _____
Cashier's Check	☐	_____ Dollars
Certified Check	☐	($_____) Payable to the Grant County Treasurer
Proposal Bond	☐	In the Amount of 5% of the Bid

Receipt is hereby acknowledged of addendum(s) No.(s) ____, ____ & ____.

Signature of Authorized Official(s)

Proposal Must Be Signed →

_____

_____
Please Print Name of Authorized Official

Firm Name _____

Address _____

_____

_____

State of Washington Contractor's License No. _____

Federal ID No. _____

Note:
(1) This proposal form is not transferable and any alteration entered hereon without prior permission from the County Engineer will be cause for considering the proposal irregular and subsequent rejection of bid.
(2) Please refer to section 1-02.6 of the standard specifications, re:"Preparation of Proposal" or "Article 4" of the instructions to bidders for building construction jobs.
(3) Should it be necessary to modify this proposal either in writing or by electronic means, please make reference to the following proposal number in your communication: _____

Revised 8/95

INFORMATIONAL COPY ONLY - NOT FOR BIDDING

Statement of Contractor Qualifications

To: Board of County Commissioners
Grant County, Washington

Date: _____, 2020

RE: **STRATFORD ROAD RECONSTRUCTION PROJECT, CRP 17-06**

I hereby maintain that I am a responsible bidder as contemplated by the policies of the State of Washington and Chapter 36.77 of the Revised Code of Washington.

1. My permanent business name and address is _____ which I have maintained for ____ years. My phone is (____)_____ Fax (____)_____
2. I have adequate plant equipment to expeditiously and properly perform the work contemplated for Grant County, Washington. **Description of work:** This contract provides for the reconstruction of 4.03 miles of two lane county road in Grant County, WA, and includes roadway excavation, embankment compaction, crushed surfacing base course, crushed surfacing top course, guardrail, seeding and fertilizing, and other work all in accordance with the attached Contract Plans, these Contract Provisions and the Standard Specifications. (Please list equipment to be used on this project. Attach list if necessary.)
   _____
   _____
3. I have adequate funds to promptly meet obligations incident to this work. (Provide bank, contact & phone.) a) _____
   b) _____ c) _____
4. I have adequate experience in this class of work and I am thoroughly familiar with the specifications used in this project. I have constructed the following similar improvements: (Provide project name, contact & phone.)
   a) _____
   b) _____
5. I have submitted and maintain annually a "Standard Questionnaire and Financial Statement" to the Washington State Department of Transportation (WSDOT): Yes ☐ No ☐ Region: _____
   WSDOT has determined: a) I am prequalified to _____
   _____ in the amount of _____.__
   b) I have failed to be prequalified for the following reasons: ___
   _____.

   The Contracting Agency may determine a prospective Bidder who is not prequalified to perform certain types of work within the financial and experience constraints determined by WSDOT to be not responsible and refuse to award a contract.
   The Board of County Commissioners shall proceed to award the contract to the lowest and best bidder but may reject any or all bids if in its opinion good cause exists therefor. (RCW 36.77.040)

I hereby certify that the above statements are true and accurate.

Very truly yours,

By: _____

(Print Name) _____

Company Name: _____

Address: _____

City, State, Zip: _____

Washington State Contractor's License No.: _____

Revised 4/02

INFORMATIONAL COPY ONLY - NOT FOR BIDDING

Bid Bond

KNOW ALL MEN BY THESE PRESENTS:

That we, _____, as Principal, and _____, as Surety, are held and firmly bound unto Grant County, Washington, as Obligee, in the full and penal sum of five (5) percent of the total amount of the bid proposal of said principal for the work hereinafter described, for the payment of which, well and truly to be made, we bind our heirs, executors, administrators, successors and assigns, and successors and assigns, firmly by these presents.

The condition of this bond is such, that whereas the principal herein is herewith submitting his or its sealed proposal for the following Grant County Project, **STRATFORD ROAD RECONSTRUCTION PROJECT, CRP 17-06,** located in Grant County, Washington, according to the terms of the proposal or bid made by the Principal therefor, and the Principal shall duly make and enter into a contract with the Obligee in accordance with the terms of said proposal or bid and award and shall give bond for the faithful performance thereof, with the Surety or Sureties approved by the Obligee; or if the principal shall, in case of failure so to do, pay and forfeit to the Obligee the penal amount of the deposit specified in the call for bids, then this obligation shall be null and void; otherwise it shall be and remain in full force and effect and the Surety shall forthwith pay and forfeit to the Obligee, as penalty and liquidated damages, the amount of this bond.

SIGNED, SEALED AND DATED THIS ____ DAY OF _____ , 2020

Principal _____

Surety _____

Attorney-in-Fact _____

INFORMATIONAL COPY ONLY - NOT FOR BIDDING

Grant County Public Works
124 Enterprise St. SE
Ephrata, WA. 98823

Local Agency Subcontractor List

Prepared in compliance with RCW 39.30.060 as amended

To Be Submitted with the Bid Proposal

Project Name: **STRATFORD ROAD RECONSTRUCTION PROJECT**

Failure to list subcontractors with whom the bidder, if awarded the contract, will directly subcontract for performance of the work of heating, ventilation and air conditioning, plumbing, as described in Chapter 18.106 RCW, and electrical as described in Chapter 19.28 RCW, or naming more than one subcontractor to perform the same work will result in your bid being non-responsive and therefore void.

Subcontractor(s) with whom the bidder will directly subcontract that are proposed to perform the work of heating, ventilation and air conditioning, plumbing, as described in Chapter 18.106 RCW and electrical as described in Chapter 19.28 RCW **must** be listed below. The work to be performed is to be listed below the subcontractor(s) name.

To the extent the Project includes one or more categories of work referenced in RCW 39.30.060. and no subcontractor is listed below to perform such work, the bidder certifies that the work will either (i) be performed by the bidder itself, or (ii) be performed by a lower tier subcontractor who will not contract directly with the bidder.

Subcontractor Name _____
Work to be Performed _____
_____
_____

Subcontractor Name _____
Work to be Performed _____
_____
_____

Subcontractor Name _____
Work to be Performed _____
_____
_____

Subcontractor Name _____
Work to be Performed _____
_____
_____

Subcontractor Name _____
Work to be Performed _____
_____
_____

Bidder's are notified that the opinion of the enforcement agency PVC or metal conduit, junction boxes, etc, are considered electrical equipment and must be installed by a licensed electrical contractor, even if the installation is for future use and no wiring or electric current is connected during the project.
A licensed electrical contractor must be listed to perform the work.

INFORMATIONAL COPY ONLY - NOT FOR BIDDING

INFORMATIONAL COPY ONLY - NOT FOR BIDDING

CONTRACT

THIS AGREEMENT, between the Board of County Commissioners of Grant County, State of Washington, acting under and by virtue of Chapter 36.77 of the Revised Code of Washington, as amended, hereinafter called the County, and _____, for itself, its heirs, executors, administrators, successors and assigns, hereinafter called the Contractor.

WITNESSETH:

That in consideration of the payments, covenants, and agreements, hereinafter mentioned, and attached and made a part of this agreement, to be made and performed by the parties hereto, and the parties hereto covenant and agree as follows:

DESCRIPTION OF WORK:

1. The Contractor shall do all work and furnish all tools, materials, and equipment necessary to improve and complete **STRATFORD ROAD RECONSTRUCTION PROJECT, CRP 17-06,** located in Grant County, Washington, as proposed in a bid opened **1:30 P.M., Tuesday, May 12, 2020** in accordance with and as described in the herein attached plans and standard specifications, and in full compliance with the terms, conditions, and stipulations herein set forth and attached, now referred to any by such reference incorporated herein and made part hereof as fully for all purposes as if here set forth at length, and shall perform any alterations in or additions to the work covered by this contract and every part thereof and any force account work may be ordered as provided in this contract and every part thereof.

2. The Contractor shall provide and be at the expense of all materials, labor, carriage, tools, implements and conveniences and things of every description that may be requisite for the transfer of materials and for constructing and completing the work provided for in this contract and every part thereof.

3. The County hereby promises and agrees with the Contractor to employ, and does employ the Contractor to provide the materials and to do and cause to be done the above described work and to complete and finish the same according to the attached plans and specifications and the terms and conditions herein contained, and hereby contracts to pay for the same according to the attached specifications and the schedule of unit or itemized prices hereto attached at the time and in the manner and upon the conditions provided for in this contract and every part thereof. The County further agrees to employ the Contractor to perform any alterations in or additions to the work covered by this contract and every part thereof and any force account work that may be ordered and pay for same under the terms of this contract and the attached plans and specifications.

4. The Contractor for himself, and for his heirs, executors, administrators and assigns, and successors and assigns, does hereby agree to the full performance of all the covenants herein contained upon the part of the Contractor.

5. It is further provided that no liability shall attach to the County by reason of entering into this contract, except as expressly provided herein.

INFORMATIONAL COPY ONLY - NOT FOR BIDDING

IN WITNESS WHEREOF, the said Contractor has executed this instrument, and the said Board of County Commissioners of Grant County has caused this instrument to be executed by and in the name of said Board by its Members, duly attested by its Clerk, the day and year below written, and the seal of said Board to be hereunto affixed on said date.

____day of _____, 2020

_____
Signature

_____
Print Name

_____
Firm Name

_____
Address

_____
City State Zip

(____)_____
Phone

ATTEST:

_____
Clerk of the Board

APPROVED AS TO FORM:

____day of _____,2020

_____
Deputy Prosecuting Attorney

BOARD OF COUNTY COMMISSIONERS
OF GRANT COUNTY, WASHINGTON

this ____ day of _____, 2020

_____
Chair

_____
Member

_____
Member

INFORMATIONAL COPY ONLY - NOT FOR BIDDING

CONTRACT BOND

KNOW ALL MEN BY THESE PRESENTS:

That we, the undersigned, _____, as principal, and _____, a corporation organized and existing under the laws of the State of _____, as surety corporation, and qualified under the laws of the State of Washington to become surety upon bonds of contractors with municipal corporations, as surety, are jointly and severally held and firmly bound to Grant County, Washington, in the penal sum of

_____

($_____) for the payment of which sum on demand we bind ourselves and our successors, heirs, administrators or personal representatives, as the case may be.

This obligation is entered into in pursuance of the statutes of the State of Washington, the Ordinances of Grant County, Washington.

Dated at _____, Washington, this ____ day of _____, 2020.

The conditions of the above obligation are such that:

WHEREAS, on **May 12, 2020**, the Board of County Commissioners of said Grant County has let or is about to let to the Principal, a certain contract, the said contract providing for the improvement of **STRATFORD ROAD RECONSTRUCTION PROJECT, CRP 17-06,** located in Grant County, Washington, (which contract is referred to herein and is made a part hereof as though attached hereto), and

WHEREAS, the said Principal has accepted, or is about to accept, the said contract, and undertake to perform the work therein provided for in the manner and within the time set forth;

NOW, THEREFORE, if the said Principal shall faithfully perform all of the provisions of said contract in the manner and within the time therein set forth or within such extensions of time as may be granted under said contract, and shall pay all laborers, mechanics, subcontractors and material men, and all persons who shall supply said Principal or subcontractors with provisions and supplies for the carrying on of said work, and shall hold said Grant County harmless from any loss or damage occasioned to any person or property by reason of any carelessness or negligence on the part of said Principal, or any subcontractor in the performance of said work and shall indemnify and hold Grant County harmless from any damage or expense by reason of failure of performance as specified in said contract or from defects appearing or developing in the material or workmanship provided or performed under said contract, and until the same is accepted, then and in that event this obligation shall be void but otherwise it shall be and remain in full force and effect.

Countersigned:

_____ Licensed Agent/Surety Co.

_____ Principal

_____

_____ Attorney-in-Fact, Surety

_____

(_____)_____ Firm, Street Address (No P.O. Box), Phone of Local Office of Agent

Approved as to Form:

_____, 2020

_____ Deputy Prosecuting Attorney

INFORMATIONAL COPY ONLY - NOT FOR BIDDING

INFORMATIONAL COPY ONLY - NOT FOR BIDDING

TITLE VI – Contractor Requirements

During the performance of this contract, the contractor/consultant, for itself, its assignees and successors in interest (hereinafter referred to as the "contractor") agrees as follows:

1. Compliance with Regulations

The contractor shall comply with the Regulations relative to non-discrimination in federally assisted programs of United States Department of Transportation (USDOT), Title 49, Code of Federal Regulations, part 21, as they may be amended from time to time, (hereinafter referred to as the Regulations), which are herein incorporated by reference and made a part of this contract.

2. Non-discrimination

The contractor, with regard to the work performed by it during the contract, shall not discriminate on the grounds of race, color, sex, or national origin in the selection and retention of sub-contractors, including procurement of materials and leases of equipment. The contractor shall not participate either directly or indirectly in the discrimination prohibited by Section 21.5 of the Regulations, including employment practices when the contract covers a program set forth in Appendix B of the Regulations.

3. Solicitations for Sub-contracts, Including Procurement of Materials and Equipment

In all solicitations either by competitive bidding or negotiations made by the contractor for work to be performed under a sub-contract, including procurement of materials or leases of equipment, each potential sub-contractor or supplier shall be notified by the contractor of the contractor's obligations under this contract and the Regulations relative to non-discrimination on the grounds of race, color, sex, or national origin.

4. Information and Reports

The contractor shall provide all information and reports required by the Regulations or directives issued pursuant thereto, and shall permit access to its books, records, accounts, other sources of information and its facilities as may be determined by the contracting agency or the appropriate federal agency to be pertinent to ascertain compliance with such Regulations, orders and instructions. Where any information required of a contractor is in the exclusive possession of another who fails or refuses to furnish this information, the contractor shall so certify to WSDOT or the USDOT as appropriate, and shall set forth what efforts it has made to obtain the information.

5. Sanctions for Non-compliance

In the event of the contractor's non-compliance with the non-discrimination provisions of this contract, the contracting agency shall impose such contract sanctions as it or the USDOT may determine to be appropriate, including, but not limited to:

- Withholding of payments to the contractor under the contract until the contractor complies, and/or;
- Cancellation, termination, or suspension of the contract, in whole or in part

6. Incorporation of Provisions

The contractor shall include the provisions of paragraphs (1) through (5) in every sub-contract, including procurement of materials and leases of equipment, unless exempt by the Regulations, or directives issued pursuant thereto. The contractor shall take such action with respect to any sub-contractor or procurement as the contracting agency or USDOT may direct as a means of enforcing such provisions including sanctions for non-compliance.

Provided, however, that in the event a contractor becomes involved in, or is threatened with, litigation with a sub-contractor or supplier as a result of such direction, the contractor may request WSDOT enter into such litigation to protect the interests of the state and, in addition, the contractor may request the USDOT enter into such litigation to protect the interests of the United States.

INFORMATIONAL COPY ONLY - NOT FOR BIDDING

INFORMATIONAL COPY ONLY - NOT FOR BIDDING

State of Washington
Department of Labor & Industries

Prevailing Wage Section - Telephone 360-902-5335
PO Box 44540, Olympia, WA 98504-4540

Washington State Prevailing Wage

The PREVAILING WAGES listed here include both the hourly wage rate and the hourly rate of fringe benefits. On public works projects, worker's wage and benefit rates must add to not less than this total. A brief description of overtime calculation requirements are provided on the Benefit Code Key.

Journey Level Prevailing Wage Rates for the Effective Date: 4/20/2020

County	Trade	Job Classification	Wage	Holiday	Overtime	Note	*Risk Class
Grant	Flaggers	Journey Level	$38.94	7B	1M	8Z	View
Grant	Laborers	Air And Hydraulic Track Drill	$41.58	7B	1M	8Z	View
Grant	Laborers	Asphalt Raker	$41.58	7B	1M	8Z	View
Grant	Laborers	Asphalt Roller, Walking	$41.31	7B	1M	8Z	View
Grant	Laborers	Brick Pavers	$41.04	7B	1M	8Z	View
Grant	Laborers	Brush Hog Feeder	$41.04	7B	1M	8Z	View
Grant	Laborers	Brush Machine	$41.58	7B	1M	8Z	View
Grant	Laborers	Caisson Worker, Free Air	$41.58	7B	1M	8Z	View
Grant	Laborers	Carpenter Tender	$41.04	7B	1M	8Z	View
Grant	Laborers	Cement Finisher Tender	$41.31	7B	1M	8Z	View
Grant	Laborers	Cement Handler	$41.04	7B	1M	8Z	View
Grant	Laborers	Chain Saw Operator & Faller	$41.58	7B	1M	8Z	View
Grant	Laborers	Clean-up Laborer	$41.04	7B	1M	8Z	View
Grant	Laborers	Compaction Equipment	$41.31	7B	1M	8Z	View
Grant	Laborers	Concrete Crewman	$41.04	7B	1M	8Z	View
Grant	Laborers	Concrete Saw, Walking	$41.31	7B	1M	8Z	View
Grant	Laborers	Concrete Signalman	$41.04	7B	1M	8Z	View
Grant	Laborers	Concrete Stack	$41.58	7B	1M	8Z	View
Grant	Laborers	Confined Space Attendant	$41.04	7B	1M	8Z	View
Grant	Laborers	Crusher Feeder	$41.04	7B	1M	8Z	View
Grant	Laborers	Demolition	$41.04	7B	1M	8Z	View
Grant	Laborers	Demolition Torch	$41.31	7B	1M	8Z	View
Grant	Laborers	Dope Pot Fireman, Non-mechanical	$41.31	7B	1M	8Z	View
Grant	Laborers	Driller Helper (when Required To Move & Position Machine)	$41.31	7B	1M	8Z	View
Grant	Laborers	Drills With Dual Masts	$41.86	7B	1M	8Z	View
Grant	Laborers	Dry Stack Walls	$41.04	7B	1M	8Z	View
Grant	Laborers	Dumpman	$41.04	7B	1M	8Z	View
Grant	Laborers	Erosion Control Laborer	$41.04	7B	1M	8Z	View
Grant	Laborers	Final Detail Cleanup (i.e, Dusting, Vacuuming, Window Cleaning; Not Construction Debris Cleanup)	$38.94	7B	1M	8Z	View
Grant	Laborers	Firewatch	$41.04	7B	1M	8Z	View

INFORMATIONAL COPY ONLY - NOT FOR BIDDING

Grant	Laborers	Form Cleaning Machine Feeder, Stacker	$41.04	7B	1M	8Z	View
Grant	Laborers	Form Setter, Paving	$41.31	7B	1M	8Z	View
Grant	Laborers	General Laborer	$41.04	7B	1M	8Z	View
Grant	Laborers	Grade Checker	$43.57	7B	1M	8Z	View
Grant	Laborers	Grout Machine Header Tender	$41.04	7B	1M	8Z	View
Grant	Laborers	Guard Rail	$41.04	7B	1M	8Z	View
Grant	Laborers	Gunite	$41.58	7B	1M	8Z	View
Grant	Laborers	Hazardous Waste Worker (level A)	$41.86	7B	1M	8Z	View
Grant	Laborers	Hazardous Waste Worker (level B)	$41.58	7B	1M	8Z	View
Grant	Laborers	Hazardous Waste Worker (level C)	$41.31	7B	1M	8Z	View
Grant	Laborers	Hazardous Waste Worker (level D)	$41.04	7B	1M	8Z	View
Grant	Laborers	Hdpe Or Similar Liner Installer	$41.04	7B	1M	8Z	View
Grant	Laborers	High Scaler	$41.58	7B	1M	8Z	View
Grant	Laborers	Jackhammer Operator Miner, Class "b"	$41.31	7B	1M	8Z	View
Grant	Laborers	Laser Beam Operator	$41.58	7B	1M	8Z	View
Grant	Laborers	Miner, Class "a"	$41.04	7B	1M	8Z	View
Grant	Laborers	Miner, Class "c"	$41.58	7B	1M	8Z	View
Grant	Laborers	Miner, Class "d"	$41.86	7B	1M	8Z	View
Grant	Laborers	Monitor Operator, Air Track Or Similar Mounting	$41.58	7B	1M	8Z	View
Grant	Laborers	Mortar Mixer	$41.58	7B	1M	8Z	View
Grant	Laborers	Nipper	$41.04	7B	1M	8Z	View
Grant	Laborers	Nozzleman	$41.58	7B	1M	8Z	View
Grant	Laborers	Nozzleman, Water (to Include Fire Hose), Air Or Steam	$41.31	7B	1M	8Z	View
Grant	Laborers	Pavement Breaker, 90 Lbs. & Over	$41.58	7B	1M	8Z	View
Grant	Laborers	Pavement Breaker, Under 90 Lbs.	$41.31	7B	1M	8Z	View
Grant	Laborers	Pipelayer	$41.58	7B	1M	8Z	View
Grant	Laborers	Pipelayer, Corrugated Metal Culvert And Multi-plate.	$41.31	7B	1M	8Z	View
Grant	Laborers	Pipewrapper	$41.58	7B	1M	8Z	View
Grant	Laborers	Plasterer Tenders	$41.58	7B	1M	8Z	View
Grant	Laborers	Pot Tender	$41.31	7B	1M	8Z	View
Grant	Laborers	Powderman	$43.23	7B	1M	8Z	View
Grant	Laborers	Powederman Helper	$41.31	7B	1M	8Z	View
Grant	Laborers	Power Buggy Operator	$41.31	7B	1M	8Z	View
Grant	Laborers	Power Tool Operator, Gas, Electric, Pneumatic	$41.31	7B	1M	8Z	View
Grant	Laborers	Railroad Equipment, Power Driven, Except Dual Mobile	$41.31	7B	1M	8Z	View
Grant	Laborers	Railroad Power Spiker Or Puller, Dual Mobile	$41.31	7B	1M	8Z	View
Grant	Laborers	Remote Equipment Operator	$41.86	7B	1M	8Z	View
Grant	Laborers	Remote Equipment Operator (i.e Compaction And Demolition)	$41.31	7B	1M	8Z	View
Grant	Laborers	Rigger/signal Person	$41.31	7B	1M	8Z	View
Grant	Laborers	Riprap Person	$41.04	7B	1M	8Z	View
Grant	Laborers	Rodder & Spreader	$41.31	7B	1M	8Z	View

INFORMATIONAL COPY ONLY - NOT FOR BIDDING

Grant	Laborers	Sandblast Tailhoseman	$41.04	7B	1M	8Z	View
Grant	Laborers	Scaffold Erector, Wood Or Steel	$41.04	7B	1M	8Z	View
Grant	Laborers	Stake Jumper	$41.04	7B	1M	8Z	View
Grant	Laborers	Structural Mover	$41.04	7B	1M	8Z	View
Grant	Laborers	Tailhoseman (water Nozzle)	$41.04	7B	1M	8Z	View
Grant	Laborers	Timber Bucker & Faller (by Hand)	$41.04	7B	1M	8Z	View
Grant	Laborers	Track Laborer (rr)	$41.04	7B	1M	8Z	View
Grant	Laborers	Traffic Control Laborer	$38.94	7B	1M	9D	View
Grant	Laborers	Traffic Control Supervisor	$39.94	7B	1M	9E	View
Grant	Laborers	Trencher, Shawnee	$41.31	7B	1M	8Z	View
Grant	Laborers	Trenchless Technology Technician	$41.58	7B	1M	8Z	View
Grant	Laborers	Truck Loader	$41.04	7B	1M	8Z	View
Grant	Laborers	Tugger Operator	$41.31	7B	1M	8Z	View
Grant	Laborers	Vibrators, All	$41.58	7B	1M	8Z	View
Grant	Laborers	Wagon Drills	$41.31	7B	1M	8Z	View
Grant	Laborers	Water Pipe Liner	$41.31	7B	1M	8Z	View
Grant	Laborers	Welder, Electrical, Manual Or Automatic (hdpe Or Similar Pipe And Liner)	$41.86	7B	1M	8Z	View
Grant	Laborers	Well-point Person	$41.04	7B	1M	8Z	View
Grant	Laborers	Wheelbarrow, Power Driven	$41.31	7B	1M	8Z	View
Grant	Power Equipment Operators	A-frame Truck (2 Or More Drums)	$46.69	7B	4W	9A	View
Grant	Power Equipment Operators	A-frame Truck (single Drum)	$46.08	7B	4W	9A	View
Grant	Power Equipment Operators	Asphalt Plant Operator	$47.29	7B	4W	9A	View
Grant	Power Equipment Operators	Assistant Plant Operator, Fireman Or Pugmixer (asphalt)	$46.08	7B	4W	9A	View
Grant	Power Equipment Operators	Assistant Refrigeration Plant & Chiller Operator (over 1000 Ton)	$46.69	7B	4W	9A	View
Grant	Power Equipment Operators	Assistant Refrigeration Plant (under 1000 Ton)	$46.08	7B	4W	9A	View
Grant	Power Equipment Operators	Automatic Subgrader (ditches & Trimmers)	$47.29	7B	4W	9A	View
Grant	Power Equipment Operators	Backfillers (cleveland & Similar)	$46.69	7B	4W	9A	View
Grant	Power Equipment Operators	Backhoe & Hoe Ram (under 3/4 Yd.)	$47.01	7B	4W	9A	View
Grant	Power Equipment Operators	Backhoe (45,000 Gw & Under)	$47.01	7B	4W	9A	View
Grant	Power Equipment Operators	Backhoe (45,000 Gw To 110,000 Gw)	$47.29	7B	4W	9A	View
Grant	Power Equipment Operators	Backhoe (over 110,000 Gw)	$47.56	7B	4W	9A	View
Grant	Power Equipment Operators	Backhoes & Hoe Ram (3 Yds & Over)	$47.56	7B	4W	9A	View
Grant	Power Equipment Operators	Backhoes & Hoe Ram (3/4 Yd. To 3 Yd.)	$47.29	7B	4W	9A	View
Grant	Power Equipment Operators	Bagley Or Stationary Scraper	$46.08	7B	4W	9A	View
Grant	Power Equipment Operators	Batch & Wet Mix Operator (multiple Units, 2 & Incl. 4)	$47.29	7B	4W	9A	View
Grant	Power Equipment Operators	Batch Plant & Wet Mix Operator, Single Unit (concrete)	$46.69	7B	4W	9A	View
Grant	Power Equipment Operators	Batch Plant (over 4 Units)	$47.29	7B	4W	9A	View
Grant	Power Equipment Operators	Belt Finishing Machine	$46.08	7B	4W	9A	View
Grant	Power Equipment Operators	Belt Loader (kocal Or Similar)	$46.69	7B	4W	9A	View

INFORMATIONAL COPY ONLY - NOT FOR BIDDING

Grant	Power Equipment Operators	Belt-crete Conveyors With Power Pack Or Similar	$46.69	7B	4W	9A	View
Grant	Power Equipment Operators	Bending Machine	$46.69	7B	4W	9A	View
Grant	Power Equipment Operators	Bit Grinders	$45.76	7B	4W	9A	View
Grant	Power Equipment Operators	Blade (finish & Bluetop), Automatic, Cmi, Abc, Finish Athey & Huber & Similar When Used As Automatic	$47.56	7B	4W	9A	View
Grant	Power Equipment Operators	Blade Operator (motor Patrol & Attachments)	$47.29	7B	4W	9A	View
Grant	Power Equipment Operators	Blower Operator (cement)	$46.08	7B	4W	9A	View
Grant	Power Equipment Operators	Boat Operator	$45.76	7B	4W	9A	View
Grant	Power Equipment Operators	Bob Cat (skid Steer)	$46.69	7B	4W	9A	View
Grant	Power Equipment Operators	Bolt Threading Machine	$45.76	7B	4W	9A	View
Grant	Power Equipment Operators	Boom Cats (side)	$47.29	7B	4W	9A	View
Grant	Power Equipment Operators	Boring Machine (earth)	$46.69	7B	4W	9A	View
Grant	Power Equipment Operators	Boring Machine (Rock Under 8 inch Bit - Quarry Master, Joy Or Similar)	$46.69	7B	4W	9A	View
Grant	Power Equipment Operators	Boring Machine (Rock Under 8" Bit - Quarry Master, Joy Or Similar)	$46.69	7B	4W	9A	View
Grant	Power Equipment Operators	Boring Machine (rock Under 8" Bit) (quarry Master, Joy Or Similar)	$46.69	7B	4W	9A	View
Grant	Power Equipment Operators	Bump Cutter (wayne, Saginau Or Similar)	$46.69	7B	4W	9A	View
Grant	Power Equipment Operators	Cableway Controller (dispatcher)	$47.29	7B	4W	9A	View
Grant	Power Equipment Operators	Cableway Operators	$47.56	7B	4W	9A	View
Grant	Power Equipment Operators	Canal Lining Machine (concrete)	$46.69	7B	4W	9A	View
Grant	Power Equipment Operators	Carrydeck & Boom Truck (under 25 Tons)	$47.01	7B	4W	9A	View
Grant	Power Equipment Operators	Cement Hog	$46.08	7B	4W	9A	View
Grant	Power Equipment Operators	Chipper (without Crane) Cleaning & Doping Machine (pipeline)	$46.69	7B	4W	9A	View
Grant	Power Equipment Operators	Clamshell, Dragline	$48.66	7B	4W	9A	View
Grant	Power Equipment Operators	Compactor (self-propelled With Blade)	$47.29	7B	4W	9A	View
Grant	Power Equipment Operators	Compressor (2000 Cfm Or Over, 2 Or More, Gas Diesel Or Electric Power)	$46.08	7B	4W	9A	View
Grant	Power Equipment Operators	Compressors (under 2000 Cfm, Gas, Diesel Or Electric Power)	$45.76	7B	4W	9A	View
Grant	Power Equipment Operators	Concrete Cleaning / Decontamination Machine Operator	$47.56	7B	4W	9A	View
Grant	Power Equipment Operators	Concrete Pump Boon Truck	$47.29	7B	4W	9A	View
Grant	Power Equipment Operators	Concrete Pumps (squeeze-crete, Flow-crete, Whitman & Similar)	$46.85	7B	4W	9A	View
Grant	Power Equipment Operators	Concrete Saw (multiple Cut)	$46.08	7B	4W	9A	View
Grant	Power Equipment Operators	Concrete Slip Form Paver	$47.29	7B	4W	9A	View
Grant	Power Equipment Operators	Conveyor Aggregate Delivery Systems (c.a.d.)	$47.29	7B	4W	9A	View
Grant	Power Equipment Operators	Crane Oiler- Driver (cdl Required) & Cable Tender, Mucking Machine	$45.76	7B	4W	9A	View

INFORMATIONAL COPY ONLY - NOT FOR BIDDING

Grant	Power Equipment Operators	Cranes (100 to 299 Tons) And All Climbing, Overhead, Rail & Tower. All Attachments Incl.	$49.16	7B	4W	9A	View
Grant	Power Equipment Operators	Cranes (25 Tons & Under), All Attachments Incl. Clamshell, Dragline	$47.01	7B	4W	9A	View
Grant	Power Equipment Operators	Cranes (25 Tons To And Including 45 Tons), All Attachments Incl. Clamshell, Dragline	$47.29	7B	4W	9A	View
Grant	Power Equipment Operators	Cranes (300 Tons and Over) And All Climbing, Overhead, Rail & Tower. All Attachments Incl.	$49.66	7B	4W	9A	View
Grant	Power Equipment Operators	Cranes (45 Tons To 85 Tons), All Attachments Incl. Clamshell And Dragline	$47.56	7B	4W	9A	View
Grant	Power Equipment Operators	Cranes (86 to 99 Tons) And All Climbing, Overhead, Rail & Tower. All Attachments Incl.	$48.66	7B	4W	9A	View
Grant	Power Equipment Operators	Crusher Feeder	$45.76	7B	4W	9A	View
Grant	Power Equipment Operators	Crusher, Grizzle & Screening Plant Operator	$47.29	7B	4W	9A	View
Grant	Power Equipment Operators	Curb Extruder (asphalt Or Concrete)	$46.85	7B	4W	9A	View
Grant	Power Equipment Operators	Deck Engineer	$46.69	7B	4W	9A	View
Grant	Power Equipment Operators	Deck Hand	$45.76	7B	4W	9A	View
Grant	Power Equipment Operators	Derricks & Stifflegs (65 Tons & Over)	$47.56	7B	4W	9A	View
Grant	Power Equipment Operators	Derricks & Stifflegs (under 65 Tons)	$47.01	7B	4W	9A	View
Grant	Power Equipment Operators	Distributor Leverman	$46.08	7B	4W	9A	View
Grant	Power Equipment Operators	Ditch Witch Or Similar	$46.08	7B	4W	9A	View
Grant	Power Equipment Operators	Dope Pots (power Agitated	$46.08	7B	4W	9A	View
Grant	Power Equipment Operators	Dozer / Tractor (up To D-6 Or Equivalent) And Traxcavator	$46.69	7B	4W	9A	View
Grant	Power Equipment Operators	Dozer / Tractors (d-6 & Equivalent & Over)	$47.29	7B	4W	9A	View
Grant	Power Equipment Operators	Dozer, 834 R/t & Similar	$47.29	7B	4W	9A	View
Grant	Power Equipment Operators	Drill Doctor	$47.29	7B	4W	9A	View
Grant	Power Equipment Operators	Driller Licensed	$48.66	7B	4W	9A	View
Grant	Power Equipment Operators	Drillers Helper	$45.76	7B	4W	9A	View
Grant	Power Equipment Operators	Drilling Equipment (8 inch Bit & Over - Robbins, Reverse Circulation & Similar)	$47.01	7B	4W	9A	View
Grant	Power Equipment Operators	Drilling Equipment (8" Bit & Over - Robbins, Reverse Circulation & Similar)	$47.01	7B	4W	9A	View
Grant	Power Equipment Operators	Drilling Equipment (8" Bit & Over) (robbins, Reverse Circulation & Similar)	$47.01	7B	4W	9A	View
Grant	Power Equipment Operators	Drills (churn, Core, Calyx Or Diamond)	$46.85	7B	4W	9A	View
Grant	Power Equipment Operators	Elevating Belt (holland Type)	$47.56	7B	4W	9A	View
Grant	Power Equipment Operators	Elevating Belt-type Loader (euclid, Barber Green & Similar)	$46.69	7B	4W	9A	View

INFORMATIONAL COPY ONLY - NOT FOR BIDDING

Grant	Power Equipment Operators	Elevating Grader-type Loader (dumor, Adams Or Similar)	$46.69	7B	4W	9A	View
Grant	Power Equipment Operators	Elevator Hoisting Materials	$46.08	7B	4W	9A	View
Grant	Power Equipment Operators	Equipment Serviceman, Greaser & Oiler	$46.85	7B	4W	9A	View
Grant	Power Equipment Operators	Fireman & Heater Tender	$45.76	7B	4W	9A	View
Grant	Power Equipment Operators	Fork Lift Or Lumber Stacker, Hydra-life & Similar	$46.08	7B	4W	9A	View
Grant	Power Equipment Operators	Generator Plant Engineers (diesel Or Electric)	$46.69	7B	4W	9A	View
Grant	Power Equipment Operators	Gin Trucks (pipeline)	$46.08	7B	4W	9A	View
Grant	Power Equipment Operators	Grade Checker	$47.01	7B	4W	9A	View
Grant	Power Equipment Operators	Gunite Combination Mixer & Compressor	$46.69	7B	4W	9A	View
Grant	Power Equipment Operators	H.d. Mechanic	$47.56	7B	4W	9A	View
Grant	Power Equipment Operators	H.d. Welder	$47.56	7B	4W	9A	View
Grant	Power Equipment Operators	Heavy Equipment Robotics Operator	$47.56	7B	4W	9A	View
Grant	Power Equipment Operators	Helicopter Pilot	$48.66	7B	4W	9A	View
Grant	Power Equipment Operators	Helper, Mechanic Or Welder, H.D	$45.76	7B	4W	9A	View
Grant	Power Equipment Operators	Hoe Ram	$47.01	7B	4W	9A	View
Grant	Power Equipment Operators	Hoist (2 Or More Drums Or Tower Hoist)	$46.85	7B	4W	9A	View
Grant	Power Equipment Operators	Hoist, Single Drum	$46.08	7B	4W	9A	View
Grant	Power Equipment Operators	Hydraulic Platform Trailers (goldhofer, Shaurerly And Similar)	$47.56	7B	4W	9A	View
Grant	Power Equipment Operators	Hydro-seeder, Mulcher, Nozzleman	$45.76	7B	4W	9A	View
Grant	Power Equipment Operators	Lime Batch Tank Operator (recycle Train)	$47.29	7B	4W	9A	View
Grant	Power Equipment Operators	Lime Brain Operator (recycle Train)	$47.29	7B	4W	9A	View
Grant	Power Equipment Operators	Loader (360 Degrees Revolving Koehring Scooper Or Similar)	$47.56	7B	4W	9A	View
Grant	Power Equipment Operators	Loader Operator (front-end & Overhead, 4 Yds. Incl. 8 Yds.)	$47.29	7B	4W	9A	View
Grant	Power Equipment Operators	Loaders (bucket Elevators And Conveyors)	$46.08	7B	4W	9A	View
Grant	Power Equipment Operators	Loaders (overhead & Front-end, Over 8 Yds. To 10 Yds.)	$47.56	7B	4W	9A	View
Grant	Power Equipment Operators	Loaders (overhead & Front-end, Under 4 Yds.. R/t)	$46.85	7B	4W	9A	View
Grant	Power Equipment Operators	Loaders (overhead And Front-end, 10 Yds. & Over)	$48.66	7B	4W	9A	View
Grant	Power Equipment Operators	Locomotive Engineer	$46.69	7B	4W	9A	View
Grant	Power Equipment Operators	Longitudinal Float	$46.08	7B	4W	9A	View
Grant	Power Equipment Operators	Master Environmental Maintenance Technician	$47.56	7B	4W	9A	View
Grant	Power Equipment Operators	Mixer (portable - Concrete)	$46.08	7B	4W	9A	View
Grant	Power Equipment Operators	Mixermobile	$46.69	7B	4W	9A	View
Grant	Power Equipment Operators	Mobile Crusher Operator (recycle Train)	$47.29	7B	4W	9A	View
Grant	Power Equipment Operators	Mucking Machine	$46.69	7B	4W	9A	View

INFORMATIONAL COPY ONLY - NOT FOR BIDDING

Grant	Power Equipment Operators	Multiple Dozer Units With Single Blade	$47.29	7B	4W	9A	View
Grant	Power Equipment Operators	Pavement Breaker, Hydra-hammer & Similar	$46.08	7B	4W	9A	View
Grant	Power Equipment Operators	Paving (dual Drum)	$47.01	7B	4W	9A	View
Grant	Power Equipment Operators	Paving Machine (asphalt And Concrete)	$47.29	7B	4W	9A	View
Grant	Power Equipment Operators	Piledriving Engineers	$47.01	7B	4W	9A	View
Grant	Power Equipment Operators	Plant Oiler	$45.76	7B	4W	9A	View
Grant	Power Equipment Operators	Posthole Auger Or Punch	$46.69	7B	4W	9A	View
Grant	Power Equipment Operators	Power Broom	$46.08	7B	4W	9A	View
Grant	Power Equipment Operators	Pump (grout Or Jet)	$46.69	7B	4W	9A	View
Grant	Power Equipment Operators	Pumpman	$45.76	7B	4W	9A	View
Grant	Power Equipment Operators	Quad-track Or Similar Equipment	$47.29	7B	4W	9A	View
Grant	Power Equipment Operators	Railroad Ballast Regulation Operator (self-propelled)	$46.08	7B	4W	9A	View
Grant	Power Equipment Operators	Railroad Power Tamper Operator (self-propelled)	$46.08	7B	4W	9A	View
Grant	Power Equipment Operators	Railroad Tamper Jack Operator (self-propelled)	$46.08	7B	4W	9A	View
Grant	Power Equipment Operators	Railroad Track Liner Operator (self-propelled)	$47.01	7B	4W	9A	View
Grant	Power Equipment Operators	Refrigeration Plant Engineer (1000 Tons & Over)	$47.01	7B	4W	9A	View
Grant	Power Equipment Operators	Refrigeration Plant Engineer (under 1000 Ton)	$46.85	7B	4W	9A	View
Grant	Power Equipment Operators	Rollerman (finishing Asphalt Pavement)	$47.29	7B	4W	9A	View
Grant	Power Equipment Operators	Rollers, All Types On Subgrade, Including Seal And Chip Coating (farm Type, Case, John Deere And Similar,or Compacting Vibrator), Except When Pulled B	$45.76	7B	4W	9A	View
Grant	Power Equipment Operators	Roto Mill (pavement Grinder)	$47.29	7B	4W	9A	View
Grant	Power Equipment Operators	Rotomill Groundsman	$46.85	7B	4W	9A	View
Grant	Power Equipment Operators	Rubber-tired Scrapers (multiple Engine With Three Or More Scrapers)	$47.56	7B	4W	9A	View
Grant	Power Equipment Operators	Rubber-tired Skidders (r/t With Or Without Attachments)	$46.85	7B	4W	9A	View
Grant	Power Equipment Operators	Scrapers, All, Rubber-tired	$47.29	7B	4W	9A	View
Grant	Power Equipment Operators	Screed Operator	$47.29	7B	4W	9A	View
Grant	Power Equipment Operators	Shovels (3 Yds. & Over)	$47.56	7B	4W	9A	View
Grant	Power Equipment Operators	Shovels (under 3 Yds.)	$47.29	7B	4W	9A	View
Grant	Power Equipment Operators	Signalman (whirleys, Highline, Hammerheads Or Similar)	$47.01	7B	4W	9A	View
Grant	Power Equipment Operators	Soil Stabilizer (p & H Or Similar)	$46.69	7B	4W	9A	View
Grant	Power Equipment Operators	Spray Curing Machine (concrete)	$46.08	7B	4W	9A	View
Grant	Power Equipment Operators	Spreader Box (self-propelled)	$46.08	7B	4W	9A	View
Grant	Power Equipment Operators	Spreader Machine	$46.69	7B	4W	9A	View
Grant	Power Equipment Operators	Steam Cleaner	$45.76	7B	4W	9A	View
Grant	Power Equipment Operators		$46.08	7B	4W	9A	View

INFORMATIONAL COPY ONLY NOT FOR BIDDING

		Straddle Buggy (ross & Similar On Construction Job Only)					
Grant	Power Equipment Operators	Surface Heater & Planer Machine	$46.85	7B	4W	9A	View
Grant	Power Equipment Operators	Tractor (farm Type R/t With Attachments, Except Backhoe)	$46.08	7B	4W	9A	View
Grant	Power Equipment Operators	Traverse Finish Machine	$46.69	7B	4W	9A	View
Grant	Power Equipment Operators	Trenching Machines (7 Ft. Depth & Over)	$47.29	7B	4W	9A	View
Grant	Power Equipment Operators	Trenching Machines (under 7 Ft. Depth Capacity)	$46.85	7B	4W	9A	View
Grant	Power Equipment Operators	Tug Boat Operator	$47.29	7B	4W	9A	View
Grant	Power Equipment Operators	Tugger Operator	$46.08	7B	4W	9A	View
Grant	Power Equipment Operators	Turnhead (with Re-screening)	$46.85	7B	4W	9A	View
Grant	Power Equipment Operators	Turnhead Operator	$46.69	7B	4W	9A	View
Grant	Power Equipment Operators	Ultra High Pressure Wateriet Cutting Tool System Operator, (30,000 Psi)	$47.56	7B	4W	9A	View
Grant	Power Equipment Operators	Vactor Guzzler, Super Sucker	$47.29	7B	4W	9A	View
Grant	Power Equipment Operators	Vacuum Blasting Machine Operator	$47.56	7B	4W	9A	View
Grant	Power Equipment Operators	Vacuum Drill (reverse Circulation Drill Under 8" Bit)	$46.85	7B	4W	9A	View
Grant	Power Equipment Operators	Welding Machine	$45.76	7B	4W	9A	View
Grant	Power Equipment Operators	Whirleys & Hammerheads, All	$47.56	7B	4W	9A	View
Grant	Surveyors	All Classifications	$28.57	0	1		View
Grant	Traffic Control Stripers	Journey Level	$47.68	7A	1K		View
Grant	Truck Drivers	Asphalt Mix Over 20 Yards	$46.42	5D	1V	8M	View
Grant	Truck Drivers	Asphalt Mix To 20 Yards	$46.05	5D	1V	8M	View
Grant	Truck Drivers	Dump Truck	$46.05	5D	1V	8M	View
Grant	Truck Drivers	Dump Truck & Trailer	$46.42	5D	1V	8M	View
Grant	Truck Drivers	Other Trucks	$45.94	5D	1V	8M	View

INFORMATIONAL COPY ONLY - NOT FOR BIDDING

Benefit Code Key – Effective 3/4/2020 thru 9/1/2020

****

Overtime Codes

Overtime calculations are based on the hourly rate actually paid to the worker. On public works projects, the hourly rate must be not less than the prevailing rate of wage minus the hourly rate of the cost of fringe benefits actually provided for the worker.

1. ALL HOURS WORKED IN EXCESS OF EIGHT (8) HOURS PER DAY OR FORTY (40) HOURS PER WEEK SHALL BE PAID AT ONE AND ONE-HALF TIMES THE HOURLY RATE OF WAGE.

B. All hours worked on Saturdays shall be paid at one and one-half times the hourly rate of wage. All hours worked on Sundays and holidays shall be paid at double the hourly rate of wage.

C. The first two (2) hours after eight (8) regular hours Monday through Friday and the first ten (10) hours on Saturday shall be paid at one and one-half times the hourly rate of wage. All other overtime hours and all hours worked on Sundays and holidays shall be paid at double the hourly rate of wage.

D. The first two (2) hours before or after a five-eight (8) hour workweek day or a four-ten (10) hour workweek day and the first eight (8) hours worked the next day after either workweek shall be paid at one and one-half times the hourly rate of wage. All additional hours worked and all worked on Sundays and holidays shall be paid at double the hourly rate of wage.

E. The first two (2) hours after eight (8) regular hours Monday through Friday and the first eight (8) hours on Saturday shall be paid at one and one-half times the hourly rate of wage. All other hours worked Monday through Saturday, and all hours worked on Sundays and holidays shall be paid at double the hourly rate of wage.

F. The first two (2) hours after eight (8) regular hours Monday through Friday and the first ten (10) hours on Saturday shall be paid at one and one-half times the hourly rate of wage. All other overtime hours worked, except Labor Day, shall be paid at double the hourly rate of wage. All hours worked on Labor Day shall be paid at three times the hourly rate of wage.

G. The first ten (10) hours worked on Saturdays and the first ten (10) hours worked on a fifth calendar weekday in a four-ten hour schedule, shall be paid at one and one-half times the hourly rate of wage. All hours worked in excess of ten (10) hours per day Monday through Saturday and all hours worked on Sundays and holidays shall be paid at double the hourly rate of wage.

H. All hours worked on Saturdays (except makeup days if work is lost due to inclement weather conditions or equipment breakdown) shall be paid at one and one-half times the hourly rate of wage. All hours worked Monday through Saturday over twelve (12) hours and all hours worked on Sundays and holidays shall be paid at double the hourly rate of wage.

I. All hours worked on Sundays and holidays shall also be paid at double the hourly rate of wage.

J. The first two (2) hours after eight (8) regular hours Monday through Friday and the first ten (10) hours on Saturday shall be paid at one and one-half times the hourly rate of wage. All hours worked over ten (10) hours Monday through Saturday, Sundays and holidays shall be paid at double the hourly rate of wage.

K. All hours worked on Saturdays and Sundays shall be paid at one and one-half times the hourly rate of wage. All hours worked on holidays shall be paid at double the hourly rate of wage.

M. All hours worked on Saturdays (except makeup days if work is lost due to inclement weather conditions) shall be paid at one and one-half times the hourly rate of wage. All hours worked on Sundays and holidays shall be paid at double the hourly rate of wage.

N. All hours worked on Saturdays (except makeup days) shall be paid at one and one-half times the hourly rate of wage. All hours worked on Sundays and holidays shall be paid at double the hourly rate of wage.

INFORMATIONAL COPY ONLY - NOT FOR BIDDING

Overtime Codes Continued

1. O. The first ten (10) hours worked on Saturday shall be paid at one and one-half times the hourly rate of wage. All hours worked on Sundays, holidays and after twelve (12) hours, Monday through Friday and after ten (10) hours on Saturday shall be paid at double the hourly rate of wage.

P. All hours worked on Saturdays (except makeup days if circumstances warrant) and Sundays shall be paid at one and one-half times the hourly rate of wage. All hours worked on holidays shall be paid at double the hourly rate of wage.

Q. The first two (2) hours after eight (8) regular hours Monday through Friday and up to ten (10) hours worked on Saturdays shall be paid at one and one-half times the hourly rate of wage. All hours worked in excess of ten (10) hours per day Monday through Saturday and all hours worked on Sundays and holidays (except Christmas day) shall be paid at double the hourly rate of wage. All hours worked on Christmas day shall be paid at two and one-half times the hourly rate of wage.

R. All hours worked on Sundays and holidays shall be paid at two times the hourly rate of wage.

S. The first two (2) hours after eight (8) regular hours Monday through Friday and the first eight (8) hours on Saturday shall be paid at one and one-half times the hourly rate of wage. All hours worked on holidays and all other overtime hours worked, except Labor Day, shall be paid at double the hourly rate of wage. All hours worked on Labor Day shall be paid at three times the hourly rate of wage.

U. All hours worked on Saturdays shall be paid at one and one-half times the hourly rate of wage. All hours worked on Sundays and holidays (except Labor Day) shall be paid at two times the hourly rate of wage. All hours worked on Labor Day shall be paid at three times the hourly rate of wage.

V. All hours worked on Sundays and holidays (except Thanksgiving Day and Christmas day) shall be paid at one and one-half times the hourly rate of wage. All hours worked on Thanksgiving Day and Christmas day shall be paid at double the hourly rate of wage.

W. All hours worked on Saturdays and Sundays (except make-up days due to conditions beyond the control of the employer)) shall be paid at one and one-half times the hourly rate of wage. All hours worked on holidays shall be paid at double the hourly rate of wage.

X. The first four (4) hours after eight (8) regular hours Monday through Friday and the first twelve (12) hours on Saturday shall be paid at one and one-half times the hourly rate of wage. All hours worked over twelve (12) hours Monday through Saturday, Sundays and holidays shall be paid at double the hourly rate of wage. When holiday falls on Saturday or Sunday, the day before Saturday, Friday, and the day after Sunday, Monday, shall be considered the holiday and all work performed shall be paid at double the hourly rate of wage.

Y. All hours worked outside the hours of 5:00 am and 5:00 pm (or such other hours as may be agreed upon by any employer and the employee) and all hours worked in excess of eight (8) hours per day (10 hours per day for a 4 x 10 workweek) and on Saturdays and holidays (except labor day) shall be paid at one and one-half times the hourly rate of wage. (except for employees who are absent from work without prior approval on a scheduled workday during the workweek shall be paid at the straight-time rate until they have worked 8 hours in a day (10 in a 4 x 10 workweek) or 40 hours during that workweek.) All hours worked Monday through Saturday over twelve (12) hours and all hours worked on Sundays and Labor Day shall be paid at double the hourly rate of wage.

Z. All hours worked on Saturdays and Sundays shall be paid at one and one-half times the hourly rate of wage. All hours worked on holidays shall be paid the straight time rate of pay in addition to holiday pay.

INFORMATIONAL COPY ONLY - NOT FOR BIDDING

Overtime Codes Continued

2. ALL HOURS WORKED IN EXCESS OF EIGHT (8) HOURS PER DAY OR FORTY (40) HOURS PER WEEK SHALL BE PAID AT ONE AND ONE-HALF TIMES THE HOURLY RATE OF WAGE.

   B. All hours worked on holidays shall be paid at one and one-half times the hourly rate of wage.

   C. All hours worked on Sundays shall be paid at one and one-half times the hourly rate of wage. All hours worked on holidays shall be paid at two times the hourly rate of wage.

   F. The first eight (8) hours worked on holidays shall be paid at the straight hourly rate of wage in addition to the holiday pay. All hours worked in excess of eight (8) hours on holidays shall be paid at double the hourly rate of wage.

   G. All hours worked on Sunday shall be paid at two times the hourly rate of wage. All hours worked on paid holidays shall be paid at two and one-half times the hourly rate of wage including holiday pay.

   H. All hours worked on Sunday shall be paid at two times the hourly rate of wage. All hours worked on holidays shall be paid at one and one-half times the hourly rate of wage.

   O. All hours worked on Sundays and holidays shall be paid at one and one-half times the hourly rate of wage.

   R. All hours worked on Sundays and holidays and all hours worked over sixty (60) in one week shall be paid at double the hourly rate of wage.

   U. All hours worked on Saturdays shall be paid at one and one-half times the hourly rate of wage. All hours worked over 12 hours in a day or on Sundays and holidays shall be paid at double the hourly rate of wage.

   W. The first two (2) hours after eight (8) regular hours Monday through Friday and the first eight (8) hours on Saturday shall be paid at one and one-half times the hourly rate of wage. All other hours worked Monday through Saturday, and all hours worked on Sundays and holidays shall be paid at double the hourly rate of wage. On a four-day, ten-hour weekly schedule, either Monday thru Thursday or Tuesday thru Friday schedule, all hours worked after ten shall be paid at double the hourly rate of wage. The first eight (8) hours worked on the fifth day shall be paid at one and one-half times the hourly rate of wage. All other hours worked on the fifth, sixth, and seventh days and on holidays shall be paid at double the hourly rate of wage.

3. ALL HOURS WORKED IN EXCESS OF EIGHT (8) HOURS PER DAY OR FORTY (40) HOURS PER WEEK SHALL BE PAID AT ONE AND ONE-HALF TIMES THE HOURLY RATE OF WAGE.

   A. Work performed in excess of eight (8) hours of straight time per day, or ten (10) hours of straight time per day when four ten (10) hour shifts are established, or forty (40) hours of straight time per week, Monday through Friday, or outside the normal shift, and all work on Saturdays shall be paid at time and one-half the straight time rate. Hours worked over twelve hours (12) in a single shift and all work performed after 6:00 pm Saturday to 6:00 am Monday and holidays shall be paid at double the straight time rate of pay. Any shift starting between the hours of 6:00 pm and midnight shall receive an additional one dollar ($1.00) per hour for all hours worked that shift. The employer shall have the sole discretion to assign overtime work to employees. Primary consideration for overtime work shall be given to employees regularly assigned to the work to be performed on overtime situations. After an employee has worked eight (8) hours at an applicable overtime rate, all additional hours shall be at the applicable overtime rate until such time as the employee has had a break of eight (8) hours or more.

   C. Work performed in excess of eight (8) hours of straight time per day, or ten (10) hours of straight time per day when four ten (10) hour shifts are established, or forty (40) hours of straight time per week, Monday through Friday, or outside the normal shift, and all work on Saturdays shall be paid at one and one-half times the hourly rate of wage. All work performed after 6:00 pm Saturday to 5:00 am Monday and Holidays shall be paid at double the hourly rate of wage. After an employee has worked eight (8) hours at an applicable overtime rate, all additional hours shall be at the applicable overtime rate until such time as the employee has had a break of eight (8) hours or more.

INFORMATIONAL COPY ONLY - NOT FOR BIDDING

Overtime Codes Continued

3. E. All hours worked Sundays and holidays shall be paid at double the hourly rate of wage. Each week, once 40 hours of straight time work is achieved, then any hours worked over 10 hours per day Monday through Saturday shall be paid at double the hourly wage rate.

F. All hours worked on Saturday shall be paid at one and one-half times the hourly rate of wage. All hours worked on Sunday shall be paid at two times the hourly rate of wage. All hours worked on paid holidays shall be paid at two and one-half times the hourly rate of wage including holiday pay.

H. All work performed on Sundays between March 16th and October 14th and all Holidays shall be compensated for at two (2) times the regular rate of pay. Work performed on Sundays between October 15th and March 15th shall be compensated at one and one half (1-1/2) times the regular rate of pay.

J. All hours worked between the hours of 10:00 pm and 5:00 am, Monday through Friday, and all hours worked on Saturdays shall be paid at a one and one-half times the hourly rate of wage. All hours worked on Sundays and holidays shall be paid at double the hourly rate of wage.

K. Work performed in excess of eight (8) hours of straight time per day, or ten (10) hours of straight time per day when four ten (10) hour shifts are established, or forty (40) hours of straight time per week, Monday through Friday, or outside the normal 5 am to 6pm shift, and all work on Saturdays shall be paid at one and one-half times the hourly rate of wage. All work performed after 6:00 pm Saturday to 5:00 am Monday and Holidays, and all hours worked in excess of twelve (12) hours in a single shift shall be paid at double the hourly rate of wage.

After an employee has worked eight (8) hours at an applicable overtime rate, all additional hours shall be at the applicable overtime rate until such time as the employee has had a break of eight (8) hours or more. When an employee returns to work without at least eight (8) hours time off since their previous shift, all such time shall be a continuation of shift and paid at the applicable overtime rate until he/she shall have the eight (8) hours rest period.

4. ALL HOURS WORKED IN EXCESS OF EIGHT (8) HOURS PER DAY OR FORTY (40) HOURS PER WEEK SHALL BE PAID AT ONE AND ONE-HALF TIMES THE HOURLY RATE OF WAGE.

A. All hours worked in excess of eight (8) hours per day or forty (40) hours per week shall be paid at double the hourly rate of wage. All hours worked on Saturdays, Sundays and holidays shall be paid at double the hourly rate of wage.

B. All hours worked over twelve (12) hours per day and all hours worked on holidays shall be paid at double the hourly rate of wage.

C. On Monday through Friday, the first four (4) hours of overtime after eight (8) hours of straight time work shall be paid at one and one half (1-1/2) times the straight time rate of pay, unless a four (4) day ten (10) hour workweek has been established. On a four (4) day ten (10) hour workweek scheduled Monday through Thursday, or Tuesday through Friday, the first two (2) hours of overtime after ten (10) hours of straight time work shall be paid at one and one half (1-1/2) times the straight time rate of pay. On Saturday, the first twelve (12) hours of work shall be paid at one and one half (1-1/2) times the straight time rate of pay, except that if the job is down on Monday through Friday due to weather conditions or other conditions outside the control of the employer, the first ten (10) hours on Saturday may be worked at the straight time rate of pay. All hours worked over twelve (12) hours in a day and all hours worked on Sunday and Holidays shall be paid at two (2) times the straight time rate of pay.

INFORMATIONAL COPY ONLY - NOT FOR BIDDING

Overtime Codes Continued

4. D. All hours worked in excess of eight (8) hours per day or forty (40) hours per week shall be paid at double the hourly rate of wage. All hours worked on Saturday, Sundays and holidays shall be paid at double the hourly rate of pay. Rates include all members of the assigned crew.

EXCEPTION:
On all multipole structures and steel transmission lines, switching stations, regulating, capacitor stations, generating plants, industrial plants, associated installations and substations, except those substations whose primary function is to feed a distribution system, will be paid overtime under the following rates:

The first two (2) hours after eight (8) regular hours Monday through Friday of overtime on a regular workday, shall be paid at one and one-half times the hourly rate of wage. All hours in excess of ten (10) hours will be at two (2) times the hourly rate of wage. The first eight (8) hours worked on Saturday will be paid at one and one-half (1-1/2) times the hourly rate of wage. All hours worked in excess of eight (8) hours on Saturday, and all hours worked on Sundays and holidays will be at the double the hourly rate of wage.

All overtime eligible hours performed on the above described work that is energized, shall be paid at the double the hourly rate of wage.

E. The first two (2) hours after eight (8) regular hours Monday through Friday and the first eight (8) hours on Saturday shall be paid at one and one-half times the hourly rate of wage. All other hours worked Monday through Saturday, and all hours worked on Sundays and holidays shall be paid at double the hourly rate of wage.

On a four-day, ten-hour weekly schedule, either Monday thru Thursday or Tuesday thru Friday schedule, all hours worked after ten shall be paid at double the hourly rate of wage. The Monday or Friday not utilized in the normal four-day, ten hour work week, and Saturday shall be paid at one and one half (1½) times the regular shift rate for the first eight (8) hours. All other hours worked Monday through Saturday, and all hours worked on Sundays and holidays shall be paid at double the hourly rate of wage.

F. All hours worked between the hours of 6:00 pm and 6:00 am, Monday through Saturday, shall be paid at a premium rate of 20% over the hourly rate of wage. All hours worked on Sundays shall be paid at one and one-half times the hourly rate of wage. All hours worked on holidays shall be paid at double the hourly rate of wage.

G. All hours worked on Saturdays shall be paid at one and one-half times the hourly rate of wage. All hours worked Monday through Saturday over twelve (12) hours and all hours worked on Sundays and holidays shall be paid at double the hourly rate of wage.

H. The first two (2) hours after eight (8) regular hours Monday through Friday and the first eight (8) hours on Saturday shall be paid at one and one-half times the hourly rate of wage. All other overtime hours worked, except Labor Day, and all hours on Sunday shall be paid at double the hourly rate of wage. All hours worked on Labor Day shall be paid at three times the hourly rate of wage.

I. The First eight (8) hours worked on Saturdays shall be paid at one and one-half times the hourly rate of wage. All hours worked in excess of eight (8) per day on Saturdays shall be paid at double the hourly rate of wage. All hours worked on Sundays and holidays shall be paid at double the hourly rate of wage.

J. The first eight (8) hours worked on a Saturday shall be paid at one and one-half times the hourly rate of wage. All hours worked in excess of eight (8) hours on a Saturday shall be paid at double the hourly rate of wage. All hours worked over twelve (12) in a day, and all hours worked on Sundays and Holidays shall be paid at double the hourly rate of wage.

K. All hours worked on a Saturday shall be paid at one and one-half times the hourly rate of wage, so long as Saturday is the sixth consecutive day worked. All hours worked over twelve (12) in a day Monday through Saturday, and all hours worked on Sundays and Holidays shall be paid at double the hourly rate of wage.

INFORMATIONAL COPY ONLY - NOT FOR BIDDING

Overtime Codes Continued

4. L. The first twelve (12) hours worked on a Saturday shall be paid at one and one-half times the hourly rate of wage. All hours worked on a Saturday in excess of twelve (12) hours shall be paid at double the hourly rate of pay. All hours worked over twelve (12) in a day Monday through Friday, and all hours worked on Sundays shall be paid at double the hourly rate of wage. All hours worked on a holiday shall be paid at one and one-half times the hourly rate of wage, except that all hours worked on Labor Day shall be paid at double the hourly rate of pay.

M. All hours worked on Sunday and Holidays shall be paid at double the hourly rate. Any employee reporting to work less than nine (9) hours from their previous quitting time shall be paid for such time at time and one-half times the hourly rate.

N. All hours worked on Saturdays shall be paid at one and one-half times the hourly rate of wage. All hours worked on Sundays and holidays, and all work performed between the hours of midnight (12:00 AM) and eight AM (8:00 AM) every day shall be paid at double the hourly rate of wage.

O. All hours worked between midnight Friday to midnight Sunday shall be paid at one and one-half the hourly rate of wage. After an employee has worked in excess of eight (8) continuous hours in any one or more calendar days, all additional hours shall be at the applicable overtime rate until such time as the employee has had a break of six (6) hours or more. All hours worked on Holidays shall be paid at double the hourly rate of wage.

P. All hours worked on Holidays shall be paid at one and one-half times the hourly rate of wage.

Q. The first four (4) hours after eight (8) regular hours Monday through Friday and the first eight (8) hours on Saturday shall be paid at one and one-half times the hourly rate of wage. All hours worked over twelve (12) hours Monday through Saturday shall be paid at double the hourly rate. All hours worked on Sundays and holidays shall be paid at double the hourly rate of wage.

R. All hours worked on Saturdays shall be paid at one and one-half times the hourly rate of wage, so long as Saturday is the sixth consecutive day worked. All hours worked on Sundays and holidays shall be paid at double the hourly rate of wage.

S. All hours worked on Saturdays and Holidays shall be paid at one and one-half times the hourly rate of wage. All hours worked on Sundays shall be paid at double the hourly rate of wage.

T. The first two (2) hours of overtime for hours worked Monday-Friday shall be paid at one and one-half times the hourly rate of wage. All hours worked in excess of ten (10) hours per day shall be paid at double the hourly rate of wage. All hours worked on Sundays and holidays shall be paid at double the hourly rate of wage. For work on Saturday which is scheduled prior to the end of shift on Friday, the first six (6) hours work shall be paid at one and one-half times the hourly rate of wage, and all hours over (6) shall be paid double the hourly rate of wage. For work on Saturday which was assigned following the close of shift on Friday, all work shall be paid at double the hourly rate of wage.

U. The first four (4) hours after eight (8) regular hours Monday through Friday and the first twelve (12) hours on Saturday shall be paid at one and one-half times the hourly rate of wage. (Except on makeup days if work is lost due to inclement weather, then the first eight (8) hours on Saturday may be paid the regular rate.) All hours worked over twelve (12) hours Monday through Saturday, and all hours worked on Sundays and holidays shall be paid at double the hourly rate of wage.

INFORMATIONAL COPY ONLY - NOT FOR BIDDING

Overtime Codes Continued

4. V. Work performed in excess of ten (10) hours of straight time per day when four ten (10) hour shifts are established or outside the normal shift (5 am to 6pm), and all work on Saturdays, except for make-up days shall be paid at time and one-half (1 ½) the straight time rate.

In the event the job is down due to weather conditions, then Saturday may, be worked as a voluntary make-up day at the straight time rate. However, Saturday shall not be utilized as a make-up day when a holiday falls on Friday. All work performed on Sundays and holidays and work in excess of twelve (12) hours per day shall be paid at double (2x) the straight time rate of pay.

After an employee has worked eight (8) hours at an applicable overtime rate, all additional hours shall be at the applicable overtime rate until such time as the employee has had a break of eight (8) hours.

When an employee returns to work without a break of eight (8) hours since their previous shift, all such time shall be a continuation of shift and paid at the applicable overtime rate until such time as the employee has had a break of eight (8) hours.

W. All hours worked on Saturdays (except makeup days if work is lost due to inclement weather conditions) shall be paid at one and one-half times the hourly rate of wage. All hours worked on Sundays and holidays shall be paid at double the hourly rate of wage.

When an employee returns to work without at least eight (8) hours time off since their previous shift, all such time shall be a continuation of shift and paid at the applicable overtime rate until such time as the employee has had a break of eight (8) hours.

X. All hours worked on Saturdays shall be paid at one and one-half times the hourly rate of wage. All hours worked on Sundays and holidays shall be paid at double the hourly rate of wage. Work performed outside the normal shift of 6 am to 6pm shall be paid at one and one-half the straight time rate, (except for special shifts or three shift operations). All work performed on Sundays and holidays shall be paid at double the hourly rate of wage. Shifts may be established when considered necessary by the Employer.

The Employer may establish shifts consisting of eight (8) or ten (10) hours of work (subject to WAC 296-127-022), that shall constitute a normal forty (40) hour work week. The Employer can change from a 5-eight to a 4-ten hour schedule or back to the other. All hours of work on these shifts shall be paid for at the straight time hourly rate. Work performed in excess of eight hours (or ten hours per day (subject to WAC 296-127-022) shall be paid at one and one-half the straight time rate.

When due to conditions beyond the control of the Employer, or when contract specifications require that work can only be performed outside the regular day shift, then by mutual agreement a special shift may be worked at the straight time rate, eight (8) hours work for eight (8) hours pay. The starting time shall be arranged to fit such conditions of work.

When an employee returns to work without at a break of eight (8) hours since their previous shift, all such time shall be a continuation of shift and paid at the applicable overtime rate until such time as the employee has had a break of eight (8) hours.

INFORMATIONAL COPY ONLY - NOT FOR BIDDING

Overtime Codes Continued

4. Y. Work performed in excess of eight (8) hours of straight time per day, or ten (10) hours of straight time per day when four ten (10) hour shifts are established, or forty (40) hours of straight time per week, Monday through Friday, or outside the normal shift, and all work on Saturdays shall be paid at time and one-half the straight time rate. All work performed after 6:00 pm Saturday to 6:00 am Monday and holidays shall be paid at double the straight time rate of pay.

   Any shift starting between the hours of 6:00 pm and midnight shall receive an additional one dollar ($1.00) per hour for all hours worked that shift.

   After an employee has worked eight (8) hours at an applicable overtime rate, all additional hours shall be at the applicable overtime rate until such time as the employee has had a break of eight (8) hours or more.

Holiday Codes

5. A. Holidays: New Year's Day, Memorial Day, Independence Day, Labor Day, Thanksgiving Day, Friday after Thanksgiving Day, and Christmas Day (7).

   B. Holidays: New Year's Day, Memorial Day, Independence Day, Labor Day, Thanksgiving Day, Friday after Thanksgiving Day, the day before Christmas, and Christmas Day (8).

   C. Holidays: New Year's Day, Presidents' Day, Memorial Day, Independence Day, Labor Day, Thanksgiving Day, the Friday after Thanksgiving Day, And Christmas Day (8).

   D. Holidays: New Year's Day, Memorial Day, Independence Day, Labor Day, Thanksgiving Day, the Friday and Saturday after Thanksgiving Day, And Christmas Day (8).

   H. Holidays: New Year's Day, Memorial Day, Independence Day, Thanksgiving Day, the Day after Thanksgiving Day, And Christmas (6).

   I. Holidays: New Year's Day, Memorial Day, Independence Day, Labor Day, Thanksgiving Day, and Christmas Day (6).

   J. Holidays: New Year's Day, Memorial Day, Independence Day, Thanksgiving Day, Friday after Thanksgiving Day, Christmas Eve Day, And Christmas Day (7).

   K. Holidays: New Year's Day, Presidents' Day, Memorial Day, Independence Day, Labor Day, Thanksgiving Day, Friday After Thanksgiving Day, The Day Before Christmas, And Christmas Day (9).

   L. Holidays: New Year's Day, Martin Luther King Jr. Day, Memorial Day, Independence Day, Labor Day, Thanksgiving Day, Friday after Thanksgiving Day, And Christmas Day (8).

   N. Holidays: New Year's Day, Presidents' Day, Memorial Day, Independence Day, Labor Day, Veterans' Day, Thanksgiving Day, The Friday After Thanksgiving Day, And Christmas Day (9).

   P. Holidays: New Year's Day, Memorial Day, Independence Day, Labor Day, Thanksgiving Day, Friday And Saturday After Thanksgiving Day, The Day Before Christmas, And Christmas Day (9). If A Holiday Falls On Sunday, The Following Monday Shall Be Considered As A Holiday.

   Q. Paid Holidays: New Year's Day, Memorial Day, Independence Day, Labor Day, Thanksgiving Day, and Christmas Day (6).

INFORMATIONAL COPY ONLY - NOT FOR BIDDING

Holiday Codes Continued

5. R. Paid Holidays: New Year's Day, Memorial Day, Independence Day, Labor Day, Thanksgiving Day, Day After Thanksgiving Day, One-Half Day Before Christmas Day, And Christmas Day. (7 1/2).

S. Paid Holidays: New Year's Day, Presidents' Day, Memorial Day, Independence Day, Labor Day, Thanksgiving Day, And Christmas Day (7).

T. Paid Holidays: New Year's Day, Washington's Birthday, Memorial Day, Independence Day, Labor Day, Thanksgiving Day, The Friday After Thanksgiving Day, Christmas Day, And The Day Before Or After Christmas (9).

Z. Holidays: New Year's Day, Memorial Day, Independence Day, Labor Day, Veterans Day, Thanksgiving Day, the Friday after Thanksgiving Day, And Christmas Day (8).

6. A. Paid Holidays: New Year's Day, Presidents' Day, Memorial Day, Independence Day, Labor Day, Thanksgiving Day, the Friday after Thanksgiving Day, And Christmas Day (8).

E. Paid Holidays: New Year's Day, Day Before Or After New Year's Day, Presidents Day, Memorial Day, Independence Day, Labor Day, Thanksgiving Day, the Friday after Thanksgiving Day, Christmas Day, and a Half-Day On Christmas Eve Day. (9 1/2).

G. Paid Holidays: New Year's Day, Martin Luther King Jr. Day, Presidents' Day, Memorial Day, Independence Day, Labor Day, Veterans' Day, Thanksgiving Day, the Friday after Thanksgiving Day, Christmas Day, and Christmas Eve Day (11).

H. Paid Holidays: New Year's Day, New Year's Eve Day, Memorial Day, Independence Day, Labor Day, Thanksgiving Day, Friday After Thanksgiving Day, Christmas Day, The Day After Christmas, And A Floating Holiday (10).

I. Paid Holidays: New Year's Day, Memorial Day, Independence Day, Labor Day, Thanksgiving Day, Friday After Thanksgiving Day, And Christmas Day (7).

T. Paid Holidays: New Year's Day, Presidents' Day, Memorial Day, Independence Day, Labor Day, Thanksgiving Day, The Friday After Thanksgiving Day, The Last Working Day Before Christmas Day, And Christmas Day (9).

Z. Holidays: New Year's Day, Memorial Day, Independence Day, Labor Day, Thanksgiving Day, Friday after Thanksgiving Day, And Christmas Day (7). If a holiday falls on Saturday, the preceding Friday shall be considered as the holiday. If a holiday falls on Sunday, the following Monday shall be considered as the holiday.

7. A. Holidays: New Year's Day, Memorial Day, Independence Day, Labor Day, Thanksgiving Day, the Friday and Saturday after Thanksgiving Day, And Christmas Day (8). Any Holiday Which Falls On A Sunday Shall Be Observed As A Holiday On The Following Monday. If any of the listed holidays falls on a Saturday, the preceding Friday shall be a regular work day.

B. Holidays: New Year's Day, Memorial Day, Independence Day, Labor Day, Thanksgiving Day, the Friday and Saturday after Thanksgiving Day, And Christmas Day (8). Any holiday which falls on a Sunday shall be observed as a holiday on the following Monday. Any holiday which falls on a Saturday shall be observed as a holiday on the preceding Friday.

C. Holidays: New Year's Day, Martin Luther King Jr. Day, Memorial Day, Independence Day, Labor Day, Thanksgiving Day, the Friday after Thanksgiving Day, And Christmas Day (8). Any holiday which falls on a Sunday shall be observed as a holiday on the following Monday. Any holiday which falls on a Saturday shall be observed as a holiday on the preceding Friday.

INFORMATIONAL COPY ONLY - NOT FOR BIDDING

Holiday Codes Continued

7. D. **Paid Holidays: New Year's Day, Memorial Day, Independence Day, Labor Day, Veteran's Day, Thanksgiving Day, the Friday after Thanksgiving Day, And Christmas Day (8). Unpaid Holidays: President's Day. Any paid holiday** which falls on a Sunday shall be observed as a holiday on the following Monday. Any paid holiday which falls on a Saturday shall be observed as a holiday on the preceding Friday.

E. Holidays: New Year's Day, Memorial Day, Independence Day, Labor Day, Thanksgiving Day, the Friday after Thanksgiving Day, And Christmas Day (7). Any holiday which falls on a Sunday shall be observed as a holiday on the following Monday. Any holiday which falls on a Saturday shall be observed as a holiday on the preceding Friday.

F. **Holidays: New Year's** Day, Memorial Day, Independence Day, Labor Day, Thanksgiving Day, the Friday after Thanksgiving Day, the last working day before Christmas day and Christmas day (8). Any holiday which falls on a Sunday shall be observed as a holiday on the following Monday. Any holiday which falls on a Saturday shall be observed as a holiday on the preceding Friday.

G. Holidays: New Year's Day, Memorial Day, Independence Day, Labor Day, Thanksgiving Day, and Christmas Day (6). Any holiday which falls on a Sunday shall be observed as a holiday on the following Monday.

H. Holidays: New Year's Day, Martin Luther King Jr. Day, Independence Day, Memorial Day, Labor Day, Thanksgiving Day, the Friday after Thanksgiving Day, the Last Working Day before Christmas Day and Christmas Day (9). Any holiday which falls on a Sunday shall be observed as a holiday on the following Monday. Any holiday which falls on a Saturday shall be observed as a holiday on the preceding Friday.

I. **Holidays: New Year's Day, President's Day, Independence** Day, Memorial Day, Labor Day, Thanksgiving Day, The Friday After Thanksgiving Day, The Day Before Christmas Day And Christmas Day (9). Any holiday which falls on a Sunday shall be observed as a holiday on the following Monday. Any holiday which falls on a Saturday shall be observed as a holiday on the preceding Friday.

J. Holidays: New Year's Day, Independence Day, Memorial Day, Labor Day, Thanksgiving Day and Christmas Day (6). Any holiday which falls on a Sunday shall be observed as a holiday on the following Monday. Any holiday which falls on a Saturday shall be observed as a holiday on the preceding Friday.

K. Holidays: New Year's Day, Memorial Day, Independence Day, Thanksgiving Day, the Friday and Saturday after Thanksgiving Day, And Christmas Day (8). Any holiday which falls on a Sunday shall be observed as a holiday on the following Monday. Any holiday which falls on a Saturday shall be observed as a holiday on the preceding Friday.

L. Holidays: New Year's Day, Memorial Day, Labor Day, Independence Day, Thanksgiving Day, the Last Work Day before Christmas Day, And Christmas Day (7). Any holiday which falls on a Sunday shall be observed as a holiday on the following Monday. Any holiday which falls on a Saturday shall be observed as a holiday on the preceding Friday.

M. **Paid Holidays: New Year's Day, The Day after or before New Year's Day, President's Day, Memorial Day,** Independence Day, Labor Day, Thanksgiving Day, the Friday after Thanksgiving Day, Christmas Day, And the Day after or before Christmas Day (10). Any holiday which falls on a Sunday shall be observed as a holiday on the following Monday. Any holiday which falls on a Saturday shall be observed as a holiday on the preceding Friday.

N. Holidays: New Year's Day, Memorial Day, Independence Day, Labor Day, Thanksgiving Day, the Friday after Thanksgiving Day, And Christmas Day (7). Any holiday which falls on a Sunday shall be observed as a holiday on the following Monday. When Christmas falls on a Saturday, the preceding Friday shall be observed as a holiday.

P. Holidays: New Year's Day, Memorial Day, Independence Day, Labor Day, Thanksgiving Day, Friday after Thanksgiving Day, And Christmas Day (7). Any holiday which falls on a Sunday shall be observed as a holiday on the following Monday.

INFORMATIONAL COPY ONLY - NOT FOR BIDDING

Holiday Codes Continued

7. Q. Holidays: New Year's Day, Memorial Day, Independence Day, Labor Day, Thanksgiving Day, the Friday after Thanksgiving Day, the Last Working Day before Christmas Day and Christmas Day (8). Any holiday which falls on a Sunday shall be observed as a holiday on the following Monday. If any of the listed holidays falls on a Saturday, the preceding Friday shall be a regular work day.

R. **Paid Holidays: New Year's Day, the day after or before New Year's Day, President's Day, Memorial Day,** Independence Day, Labor Day, Thanksgiving Day, the Friday after Thanksgiving Day, Christmas Day, and the day after or before Christmas Day (10). If any of the listed holidays fall on Saturday, the preceding Friday shall be observed as the holiday. If any of the listed holidays falls on a Sunday, the day observed by the Nation shall be considered a holiday and compensated accordingly.

S. Paid Holidays: New Year's Day, Memorial Day, Independence Day, Labor Day, Thanksgiving Day, Friday after Thanksgiving Day, Christmas Day, the Day after Christmas, and A Floating Holiday (9). If any of the listed holidays falls on a Sunday, the day observed by the Nation shall be considered a holiday and compensated accordingly.

T. Paid Holidays: New Year's Day, the Day after or before New **Year's Day, President's Day, Memorial Day,** Independence Day, Labor Day, Thanksgiving Day, the Friday after Thanksgiving Day, Christmas Day, and The Day after or before Christmas Day. (10). If any of the listed holidays falls on a Sunday, the day observed by the Nation shall be considered a holiday and compensated accordingly. Any holiday which falls on a Saturday shall be observed as a holiday on the preceding Friday.

V. Holidays: **New Year's Day, President's Birthday, Memorial Day, Independence Day,** Labor Day, Thanksgiving Day, the Friday after Thanksgiving Day, Christmas Day, the day before or after Christmas, and the day before or after New **Year's Day. If any of the above listed holidays falls on a Sunday, the day observed by the Nation shall be considered** a holiday and compensated accordingly.

W. Holidays: **New Year's Day, Day After New Year's, Memorial Day, Independence Day, Labor Day, Thanksgiving** Day, the Friday after Thanksgiving Day, Christmas Eve Day, Christmas Day, the day after Christmas, the day before **New Year's Day, and a Floating Holiday.**

X. Holidays: New Year's Day, Day before or after **New Year's** Day, **Presidents' Day,** Memorial Day, Independence Day, Labor Day, Thanksgiving Day, the Friday after Thanksgiving Day, Christmas Day, and the day before or after Christmas day. If a holiday falls on a Saturday or on a Friday that is the normal day off, then the holiday will be taken on the last normal workday. If the holiday falls on a Monday that is the normal day off or on a Sunday, then the holiday will be taken on the next normal workday.

Y. Holidays: New Year's Day, Presidents' **Day,** Memorial Day, Independence Day, Labor Day, Thanksgiving Day, the Friday after Thanksgiving Day, and Christmas Day. (8) If the holiday falls on a Sunday, then the day observed by the federal government shall be considered a holiday and compensated accordingly.

Z. **Holidays: New Year's Day, President's Day, Independence Day, Memorial Day,** Labor Day, Thanksgiving Day, The Friday After Thanksgiving Day, And Christmas Day (8). Any holiday which falls on a Sunday shall be observed as a holiday on the following Monday. Any holiday which falls on a Saturday shall be observed as a holiday on the preceding Friday.

15. A. Holidays: New Year's Day, Memorial Day, Independence Day, Labor Day, Thanksgiving Day, the Friday after Thanksgiving Day, the day before Christmas Day and Christmas Day. (8) Any holiday which falls on a Sunday shall be observed as a holiday on the following Monday.

B. **Holidays: New Year's Day, Martin Luther King Jr. Day, President's Day, Memorial Day, Independence Day, Labor Day, Veteran's Day, Thanksgiving Day, and Christmas Day.** (9)

C. Holidays: New Year's Day, Memorial Day, Independence Day, Labor Day, Thanksgiving Day, the Friday after Thanksgiving Day, the day before Christmas Day and Christmas Day. (8)

INFORMATIONAL COPY ONLY - NOT FOR BIDDING

Holiday Codes Continued

15. D. Holidays: New Year's Day, Presidents' Day, Memorial Day, Independence Day, Labor Day, Thanksgiving Day, Friday after Thanksgiving Day, Christmas Day, and the day after Christmas.

E. Holidays: the day before New Years's Day, New Year's Day, Martin Luther King, Jr. Day, Presidents' Day, Memorial Day, Independence Day, Labor Day, Veteran's Day, Thanksgiving Day, Friday after Thanksgiving Day, the day before Christmas, and Christmas Day. (12)

Note Codes

8. D. Workers working with supplied air on hazmat projects receive an additional $1.00 per hour.

L. Workers on hazmat projects receive additional hourly premiums as follows -Level A: $0.75, Level B: $0.50, And Level C: $0.25.

M. Workers on hazmat projects receive additional hourly premiums as follows: Levels A & B: $1.00, Levels C & D: $0.50.

N. Workers on hazmat projects receive additional hourly premiums as follows -Level A: $1.00, Level B: $0.75, Level C: $0.50, And Level D: $0.25.

P. Workers on hazmat projects receive additional hourly premiums as follows -Class A Suit: $2.00, Class B Suit: $1.50, Class C Suit: $1.00, And Class D Suit $0.50.

Q. The highest pressure registered on the gauge for an accumulated time of more than fifteen (15) minutes during the shift shall be used in determining the scale paid.

S. Effective August 31, 2012 – A Traffic Control Supervisor shall be present on the project whenever flagging or spotting or other traffic control labor is being utilized. Flaggers and Spotters shall be posted where shown on approved Traffic Control Plans or where directed by the Engineer. All flaggers and spotters shall possess a current flagging card issued by the State of Washington, Oregon, Montana, or Idaho. This classification is only effective on or after August 31, 2012.

T. Effective August 31, 2012 – A Traffic Control Laborer performs the setup, maintenance and removal of all temporary traffic control devices and construction signs necessary to control vehicular, bicycle, and pedestrian traffic during construction operations. Flaggers and Spotters shall be posted where shown on approved Traffic Control Plans or where directed by the Engineer. All flaggers and spotters shall possess a current flagging card issued by the State of Washington, Oregon, Montana, or Idaho. This classification is only effective on or after August 31, 2012.

U. Workers on hazmat projects receive additional hourly premiums as follows – Class A Suit: $2.00, Class B Suit: $1.50, And Class C Suit: $1.00. Workers performing underground work receive an additional $0.40 per hour for any and all work performed underground, including operating, servicing and repairing of equipment. The premium for underground work shall be paid for the entire shift worked. Workers who work suspended by a rope or cable receive an additional $0.50 per hour. The premium for work suspended shall be paid for the entire shift worked. Workers who do "pioneer" work (break open a cut, build road, etc.) more than one hundred fifty (150) feet above grade elevation receive an additional $0.50 per hour.

INFORMATIONAL COPY ONLY - NOT FOR BIDDING

Note Codes Continued

8. V. In addition to the hourly wage and fringe benefits, the following depth and enclosure premiums shall be paid. The premiums are to be calculated for the maximum depth and distance into an enclosure that a diver reaches in a day. The premiums are to be paid one time for the day and are not used in calculating overtime pay.

Depth premiums apply to depths of fifty feet or more. Over 50' to 100' - $2.00 per foot for each foot over 50 feet. Over 101' to 150' - $3.00 per foot for each foot over 101 feet. Over 151' to 220' - $4.00 per foot for each foot over 220 feet. Over 221' - $5.00 per foot for each foot over 221 feet.

Enclosure premiums apply when divers enter enclosures (such as pipes or tunnels) where there is no vertical ascent and is measured by the distance travelled from the entrance. 25' to 300' - $1.00 per foot from entrance. 300' to 600' - $1.50 per foot beginning at 300'. Over 600' - $2.00 per foot beginning at 600'.

W. Meter Installers work on single phase 120/240V self-contained residential meters. The Lineman/Groundmen rates would apply to meters not fitting this description.

X. Workers on hazmat projects receive additional hourly premiums as follows - Class A Suit: $2.00, Class B Suit: $1.50, Class C Suit: $1.00, and Class D Suit: $0.50. Special Shift Premium: Basic hourly rate plus $2.00 per hour.

When due to conditions beyond the control of the Employer or when an owner (not acting as the contractor), a government agency or the contract specifications requires that work can only be performed outside the normal 5 am to 6pm shift, then the special shift premium will be applied to the basic hourly rate. When an employee works on a special shift, they shall be paid a special shift premium for each hour worked unless they are in OT or Double-time status. (For example, the special shift premium does not waive the overtime requirements for work performed on Saturday or Sunday.)

Y. Tide Work: When employees are called out between the hours of 6:00 p.m. and 6:00 a.m. to work on tide work (work located in the tide plane) all time worked shall be at one and one-half times the hourly rate of pay.

Swinging Stage/Boatswains Chair: Employees working on a swinging state or boatswains chair or under conditions that require them to be tied off to allow their hands to be free shall receive seventy-five cents ($0.75) per hour above the classification rate.

Z. Workers working with supplied air on hazmat projects receive an additional $1.00 per hour.

Special Shift Premium: Basic hourly rate plus $2.00 per hour. When due to conditions beyond the control of the Employer or when an owner (not acting as a contractor), a government agency or the contract specifications require that more than (4) hours of a special shift can only be performed outside the normal 6 am to 6pm shift, then the special shift premium will be applied to the basic straight time for the entire shift. When an employee works on a special shift, they will be paid a special shift premium for each hour worked unless they are in overtime or double-time status. (For example, the special shift premium does not waive the overtime requirements for work performed on Saturday or Sunday.)

INFORMATIONAL COPY ONLY - NOT FOR BIDDING

Note Codes Continued

9. A. Workers working with supplied air on hazmat projects receive an additional $1.00 per hour.

Special Shift Premium: Basic hourly rate plus $2.00 per hour. When due to conditions beyond the control of the Employer or when an owner (not acting as the contractor), a government agency or the contract specifications require that more than four (4) hours of a special shift can only be performed outside the normal 6 am to 6pm shift, then the special shift premium will be applied to the basic straight time for the entire shift. When an employee works on a special shift, they shall be paid a special shift premium for each hour worked unless they are in overtime or double-time status. (For example, the special shift premium does not waive the overtime requirements for work performed on Saturday or Sunday.)

Certified Crane Operator Premium: Crane operators requiring certifications shall be paid $0.50 per hour above their classification rate.

Boom Pay Premium: All cranes including tower shall be paid as follows based on boom length:

(A) – 130' to 199' – $0.50 per hour over their classification rate.
(B) – 200' to 299' – $0.80 per hour over their classification rate.
(C) – 300' and over – $1.00 per hour over their classification rate.

B. The highest pressure registered on the gauge for an accumulated time of more than fifteen (15) minutes during the shift shall be used in determining the scale paid.

Tide Work: When employees are called out between the hours of 6:00 p.m. and 6:00 a.m. to work on tide work (work located in the tide plane) all time worked shall be at one and one-half times the hourly rate of pay. Swinging Stage/Boatswains Chair: Employees working on a swinging stage or boatswains chair or under conditions that require them to be tied off to allow their hands to be free shall receive seventy-five cents ($0.75) per hour above the classification rate.

C. Tide Work: When employees are called out between the hours of 6:00 p.m. and 6:00 a.m. to work on tide work (work located in the tide plane) all time worked shall be at one and one-half times the hourly rate of pay. Swinging Stage/Boatswains Chair: Employees working on a swinging stage or boatswains chair or under conditions that require them to be tied off to allow their hands to be free shall receive seventy-five cents ($0.75) per hour above the classification rate.

Effective August 31, 2012 – A Traffic Control Supervisor shall be present on the project whenever flagging or spotting or other traffic control labor is being utilized. A Traffic Control Laborer performs the setup, maintenance and removal of all temporary traffic control devices and construction signs necessary to control vehicular, bicycle, and pedestrian traffic during construction operations. Flaggers and Spotters shall be posted where shown on approved Traffic Control Plans or where directed by the Engineer. All flaggers and spotters shall possess a current flagging card issued by the State of Washington, Oregon, Montana, or Idaho. These classifications are only effective on or after August 31, 2012.

D. Industrial Painter wages are required for painting within industrial facilities such as treatment plants, pipelines, towers, dams, bridges, power generation facilities and manufacturing facilities such as chemical plants, etc., or anywhere abrasive blasting is necessary to prepare surfaces, or hazardous materials encapsulation is required.

E. Heavy Construction includes construction, repair, alteration or additions to the production, fabrication or manufacturing portions of industrial or manufacturing plants, hydroelectric or nuclear power plants and atomic reactor construction. Workers on hazmat projects receive additional hourly premiums as follows -Level A: $1.00, Level B: $0.75, Level C: $0.50, And Level D: $0.25.

INFORMATIONAL COPY ONLY - NOT FOR BIDDING

Washington State Department of Labor and Industries
Policy Statement
(Regarding the Production of "Standard" or "Non-standard" Items)

Below is the department's (State L&I's) list of criteria to be used in determining whether a prefabricated item is "standard" or "non-standard". For items not appearing on WSDOT's predetermined list, these criteria shall be used by the Contractor (and the Contractor's subcontractors, agents to subcontractors, suppliers, manufacturers, and fabricators) to determine coverage under RCW 39.12. The production, in the State of Washington, of non-standard items is covered by RCW 39.12, and the production of standard items is not. The production of any item outside the State of Washington is not covered by RCW 39.12.

1. Is the item fabricated for a public works project? If not, it is not subject to RCW 39.12. If it is, go to question 2.

2. Is the item fabricated on the public works jobsite? If it is, the work is covered under RCW 39.12. If not, go to question 3.

3. Is the item fabricated in an assembly/fabrication plant set up for, and dedicated primarily to, the public works project? If it is, the work is covered by RCW 39.12. If not, go to question 4.

4. Does the item require any assembly, cutting, modification or other fabrication by the supplier? If not, the work is not covered by RCW 39.12. If yes, go to question 5.

5. Is the prefabricated item intended for the public works project typically an inventory item which could reasonably be sold on the general market? If not, the work is covered by RCW 39.12. If yes, go to question 6.

6. Does the specific prefabricated item, generally defined as standard, have any unusual characteristics such as shape, type of material, strength requirements, finish, etc? If yes, the work is covered under RCW 39.12.

Any firm with questions regarding the policy, WSDOT's Predetermined List, or for determinations of covered and non-covered workers shall be directed to State L&I at (360) 902-5330.

INFORMATIONAL COPY ONLY - NOT FOR BIDDING

WSDOT's
Predetermined List for
Suppliers - Manufactures - Fabricator

Below is a list of potentially prefabricated items, originally furnished by WSDOT to Washington State Department of Labor and Industries, that may be considered non-standard and therefore covered by the prevailing wage law, RCW 39.12. Items marked with an X in the "YES" column should be considered to be non-standard and therefore covered by RCW 39.12. Items marked with an X in the "NO" column should be considered to be standard and therefore not covered. Of course, exceptions to this general list may occur, and in that case shall be evaluated according to the criteria described in State and L&I's policy statement.

	ITEM DESCRIPTION	YES	NO
1.	Metal rectangular frames, solid metal covers, herringbone grates, and bi-directional vaned grates for Catch Basin Types 1, 1L, 1P, and 2 and Concrete Inlets. See Std. Plans		X
2.	Metal circular frames (rings) and covers, circular grates, and prefabricated ladders for Manhole Types 1, 2, and 3, Drywell Types 1, 2, and 3 and Catch Basin Type 2. See Std. Plans		X
3.	Prefabricated steel grate supports and welded grates, metal frames and dual vaned grates, and Type 1, 2, and 3 structural tubing grates for Drop Inlets. See Std. Plans.		X
4.	Concrete Pipe - Plain Concrete pipe and reinforced concrete pipe Class 2 to 5 sizes smaller than 60 inch diameter.		X
5.	Concrete Pipe - Plain Concrete pipe and reinforced concrete pipe Class 2 to 5 sizes larger than 60 inch diameter.		X
6.	Corrugated Steel Pipe - Steel lock seam corrugated pipe for culverts and storm sewers, sizes 30 inch to 120 inches in diameter. May also be treated, 1 thru 5.		X
7.	Corrugated Aluminum Pipe - Aluminum lock seam corrugated pipe for culverts and storm sewers, sizes 30 inch to 120 inches in diameter. May also be treated, #5.		X

INFORMATIONAL COPY ONLY - NOT FOR BIDDING

	ITEM DESCRIPTION	YES	NO
8.	Anchor Bolts & Nuts - Anchor Bolts and Nuts, for mounting sign structures, luminaries and other items, shall be made from commercial bolt stock. See Contract Plans and Std. Plans for size and material type.		X
9.	Aluminum Pedestrian Handrail - Pedestrian handrail conforming to the type and material specifications set forth in the contract plans. Welding of aluminum shall be in accordance with Section 9-28.14(3).	X	
10.	Major Structural Steel Fabrication - Fabrication of major steel items such as trusses, beams, girders, etc., for bridges.	X	
11.	Minor Structural Steel Fabrication - Fabrication of minor steel Items such as special hangers, brackets, access doors for structures, access ladders for irrigation boxes, bridge expansion joint systems, etc., involving welding, cutting, punching and/or boring of holes. See Contact Plans for item description and shop drawings.	X	
12.	Aluminum Bridge Railing Type BP - Metal bridge railing conforming to the type and material specifications set forth in the Contract Plans. Welding of aluminum shall be in accordance with Section 9-28.14(3).		X
13.	Concrete Piling--Precast-Prestressed concrete piling for use as 55 and 70 ton concrete piling. Concrete to conform to Section 9-19.1 of Std. Spec..	X	
14.	Precast Manhole Types 1, 2, and 3 with cones, adjustment sections and flat top slabs. See Std. Plans.		X
15.	Precast Drywell Types 1, 2, and with cones and adjustment Sections. See Std. Plans.		X
16.	Precast Catch Basin - Catch Basin type 1, 1L, 1P, and 2 With adjustment sections. See Std. Plans.		X

INFORMATIONAL COPY ONLY - NOT FOR BIDDING

	ITEM DESCRIPTION	YES	NO
17.	Precast Concrete Inlet - with adjustment sections, See Std. Plans		X
18.	Precast Drop Inlet Type 1 and 2 with metal grate supports. See Std. Plans.		X
19.	Precast Grate Inlet Type 2 with extension and top units. See Std. Plans		X
20.	Metal frames, vaned grates, and hoods for Combination Inlets. See Std. Plans		X
21.	Precast Concrete Utility Vaults - Precast Concrete utility vaults of various sizes. Used for in ground storage of utility facilities and controls. See Contract Plans for size and construction requirements. Shop drawings are to be provided for approval prior to casting		X
22.	Vault Risers - For use with Valve Vaults and Utilities X Vaults.		X
23.	Valve Vault - For use with underground utilities. See Contract Plans for details.		X
24.	Precast Concrete Barrier - Precast Concrete Barrier for use as new barrier or may also be used as Temporary Concrete Barrier. Only new state approved barrier may be used as permanent barrier.		X
25.	Reinforced Earth Wall Panels – Reinforced Earth Wall Panels in size and shape as shown in the Plans. Fabrication plant has annual approval for methods and materials to be used. See Shop Drawing. Fabrication at other locations may be approved, after facilities inspection, contact HQ. Lab.	X	
26.	Precast Concrete Walls - Precast Concrete Walls - tilt-up wall panel in size and shape as shown in Plans. Fabrication plant has annual approval for methods and materials to be used	X	

INFORMATIONAL COPY ONLY - NOT FOR BIDDING

	ITEM DESCRIPTION	YES	NO
27.	Precast Railroad Crossings - Concrete Crossing Structure Slabs.	X	
28.	12, 18 and 26 inch Standard Precast Prestressed Girder – Standard Precast Prestressed Girder for use in structures. Fabricator plant has annual approval of methods and materials to be used. Shop Drawing to be provided for approval prior to casting girders. See Std. Spec. Section 6-02.3(25)A	X	
29.	Prestressed Concrete Girder Series 4-14 - Prestressed Concrete Girders for use in structures. Fabricator plant has annual approval of methods and materials to be used. Shop Drawing to be provided for approval prior to casting girders. See Std. Spec. Section 6-02.3(25)A .	X	
30.	Prestressed Tri-Beam Girder - Prestressed Tri-Beam Girders for use in structures. Fabricator plant has annual approval of methods and materials to be used. Shop Drawing to be provided for approval prior to casting girders. See Std. Spec. Section 6-02.3(25)A	X	
31.	Prestressed Precast Hollow-Core Slab – Precast Prestressed Hollow-core slab for use in structures. Fabricator plant has annual approval of methods and materials to be used. Shop Drawing to be provided for approval prior to casting girders. See Std. Spec. Section 6-02.3(25)A.	X	
32.	Prestressed-Bulb Tee Girder - Bulb Tee Prestressed Girder for use in structures. Fabricator plant has annual approval of methods and materials to be used. Shop Drawing to be provided for approval prior to casting girders. See Std. Spec. Section 6-02.3(25)A	X	
33.	Monument Case and Cover See Std. Plan.		X

INFORMATIONAL COPY ONLY - NOT FOR BIDDING

	ITEM DESCRIPTION	YES	NO
34.	Cantilever Sign Structure - Cantilever Sign Structure fabricated from steel tubing meeting AASHTO-M-183. See Std. Plans, and Contract Plans for details. The steel structure shall be galvanized after fabrication in accordance with AASHTO-M-111.	X	
35.	Mono-tube Sign Structures - Mono-tube Sign Bridge fabricated to details shown in the Plans. Shop drawings for approval are required prior to fabrication.	X	
36.	Steel Sign Bridges - Steel Sign Bridges fabricated from steel tubing meeting AASHTO-M-138 for Aluminum Alloys. See Std. Plans, and Contract Plans for details. The steel structure shall be galvanized after fabrication in accordance with AASHTO-M-111.	X	
37.	Steel Sign Post - Fabricated Steel Sign Posts as detailed in Std Plans. Shop drawings for approval are to be provided prior to fabrication		X
38.	Light Standard-Prestressed - Spun, prestressed, hollow concrete poles.	X	
39.	Light Standards - Lighting Standards for use on highway illumination systems, poles to be fabricated to conform with methods and materials as specified on Std. Plans. See Specia Provisions for pre-approved drawings.	X	
40.	Traffic Signal Standards - Traffic Signal Standards for use on highway and/or street signal systems. Standards to be fabricated to conform with methods and material as specified on Std. Plans. See Special Provisions for pre-approved drawings	X	
41.	Precast Concrete Sloped Mountable Curb (Single and DualFaced) See Std. Plans.		X

INFORMATIONAL COPY ONLY - NOT FOR BIDDING

ITEM DESCRIPTION	YES	NO
42. Traffic Signs - Prior to approval of a Fabricator of Traffic Signs, the sources of the following materials must be submitted and approved for reflective sheeting, legend material, and aluminum sheeting. **NOTE:** *** Fabrication inspection required. Only signs tagged "Fabrication Approved" by WSDOT Sign Fabrication Inspector to be installed	X	X
	Custom Message	Std Signing Message
43. Cutting & bending reinforcing steel		X
44. Guardrail components	X	X
	Custom End Sec	Standard Sec
45. Aggregates/Concrete mixes	Covered by WAC 296-127-018	
46. Asphalt	Covered by WAC 296-127-018	
47. Fiber fabrics		X
48. Electrical wiring/components		X
49. treated or untreated timber pile		X
50. Girder pads (elastomeric bearing)	X	
51. Standard Dimension lumber		X
52. Irrigation components		X

INFORMATIONAL COPY ONLY - NOT FOR BIDDING

ITEM DESCRIPTION	YES	NO
53. Fencing materials		X
54. Guide Posts		X
55. Traffic Buttons		X
56. Epoxy		X
57. Cribbing		X
58. Water distribution materials		X
59. Steel "H" piles		X
60. Steel pipe for concrete pile casings		X
61. Steel pile tips, standard		X
62. Steel pile tips, custom	X	

Prefabricated items specifically produced for public works projects that are prefabricated in a county other than the county wherein the public works project is to be completed, the wage for the offsite prefabrication shall be the applicable prevailing wage for the county in which the actual prefabrication takes place.

It is the manufacturer of the prefabricated product to verify that the correct county wage rates are applied to work they perform.

See RCW 39.12.010
(The definition of "locality" in RCW 39.12.010(2) contains the phrase "wherein the physical work is being performed." The department interprets this phrase to mean the actual work site.

INFORMATIONAL COPY ONLY - NOT FOR BIDDING

WSDOT's List of State Occupations not applicable to Heavy and Highway Construction Projects

This project is subject to the state hourly minimum rates for wages and fringe benefits in the contract provisions, as provided by the state Department of Labor and Industries.
The following list of occupations, is comprised of those occupations that are not normally used in the construction of heavy and highway projects.
When considering job classifications for use and / or payment when bidding on, or building heavy and highway construction projects for, or administered by WSDOT, these Occupations will be excepted from the included "Washington State Prevailing Wage Rates For Public Work Contracts" documents.

- Building Service Employees
- Electrical Fixture Maintenance Workers
- Electricians - Motor Shop
- Heating Equipment Mechanics
- Industrial Engine and Machine Mechanics
- Industrial Power Vacuum Cleaners
- Inspection, Cleaning, Sealing of Water Systems by Remote Control
- Laborers - Underground Sewer & Water
- Machinists (Hydroelectric Site Work)
- Modular Buildings
- Playground & Park Equipment Installers
- Power Equipment Operators - Underground Sewer & Water
- Residential *** ALL ASSOCIATED RATES ***
- Sign Makers and Installers (Non-Electrical)
- Sign Makers and Installers (Electrical)
- Stage Rigging Mechanics (Non Structural)

The following occupations may be used only as outlined in the preceding text concerning "WSDOT's list for Suppliers - Manufacturers - Fabricators"

- Fabricated Precast Concrete Products
- Metal Fabrication (In Shop)

Definitions for the Scope of Work for prevailing wages may be found at the Washington State Department of Labor and Industries web site and in WAC Chapter 296-127.

INFORMATIONAL COPY ONLY - NOT FOR BIDDING

Washington State Department of Labor and Industries
Policy Statements
(Regarding Production and Delivery of Gravel, Concrete, Asphalt, etc.)

WAC 296-127-018 Agency filings affecting this section

Coverage and exemptions of workers involved in the production and delivery of gravel, concrete, asphalt, or similar materials.

(1) The materials covered under this section include but are not limited to: Sand, gravel, crushed rock, concrete, asphalt, or other similar materials.

(2) All workers, regardless of by whom employed, are subject to the provisions of chapter 39.12 RCW when they perform any or all of the following functions:

(a) They deliver or discharge any of the above-listed materials to a public works project site:

(i) At one or more point(s) directly upon the location where the material will be incorporated into the project; or

(ii) At multiple points at the project; or

(iii) Adjacent to the location and coordinated with the incorporation of those materials.

(b) They wait at or near a public works project site to perform any tasks subject to this section of the rule.

(c) They remove any materials from a public works construction site pursuant to contract requirements or specifications (e.g., excavated materials, materials from demolished structures, clean-up materials, etc.).

(d) They work in a materials production facility (e.g., batch plant, borrow pit, rock quarry, etc.,) which is established for a public works project for the specific, but not necessarily exclusive, purpose of supplying materials for the project.

(e) They deliver concrete to a public works site regardless of the method of incorporation.

(f) They assist or participate in the incorporation of any materials into the public works project.

INFORMATIONAL COPY ONLY - NOT FOR BIDDING

(3) All travel time that relates to the work covered under subsection (2) of this section requires the payment of prevailing wages. Travel time includes time spent waiting to load, loading, transporting, waiting to unload, and delivering materials. Travel time would include all time spent in travel in support of a public works project whether the vehicle is empty or full. For example, travel time spent returning to a supply source to obtain another load of material for use on a public works site or returning to the public works site to obtain another load of excavated material is time spent in travel that is subject to prevailing wage. Travel to a supply source, including travel from a public works site, to obtain materials for use on a private project would not be travel subject to the prevailing wage.

(4) Workers are not subject to the provisions of chapter 39.12 RCW when they deliver materials to a stockpile.

(a) A "stockpile" is defined as materials delivered to a pile located away from the site of incorporation such that the stockpiled materials must be physically moved from the stockpile and transported to another location on the project site in order to be incorporated into the project.

(b) A stockpile does not include any of the functions described in subsection (2)(a) through (f) of this section; nor does a stockpile include materials delivered or distributed to multiple locations upon the project site; nor does a stockpile include materials dumped at the place of incorporation, or adjacent to the location and coordinated with the incorporation.

(5) The applicable prevailing wage rate shall be determined by the locality in which the work is performed. Workers subject to subsection (2)(d) of this section, who produce such materials at an off-site facility shall be paid the applicable prevailing wage rates for the county in which the off-site facility is located. Workers subject to subsection (2) of this section, who deliver such materials to a public works project site shall be paid the applicable prevailing wage rates for the county in which the public works project is located.

[Statutory Authority: Chapter 39.12 RCW, RCW 43.22.051 and 43.22.270. 08-24-101, § 296-127-018, filed 12/2/08, effective 1/2/09. Statutory Authority: Chapters 39.04 and 39.12 RCW and RCW 43.22.270. 92-01-104 and 92-08-101, § 296-127-018, filed 12/18/91 and 4/1/92, effective 8/31/92.]

INFORMATIONAL COPY ONLY - NOT FOR BIDDING

INFORMATIONAL COPY ONLY - NOT FOR BIDDING

STRATFORD ROAD RECONSTRUCTION

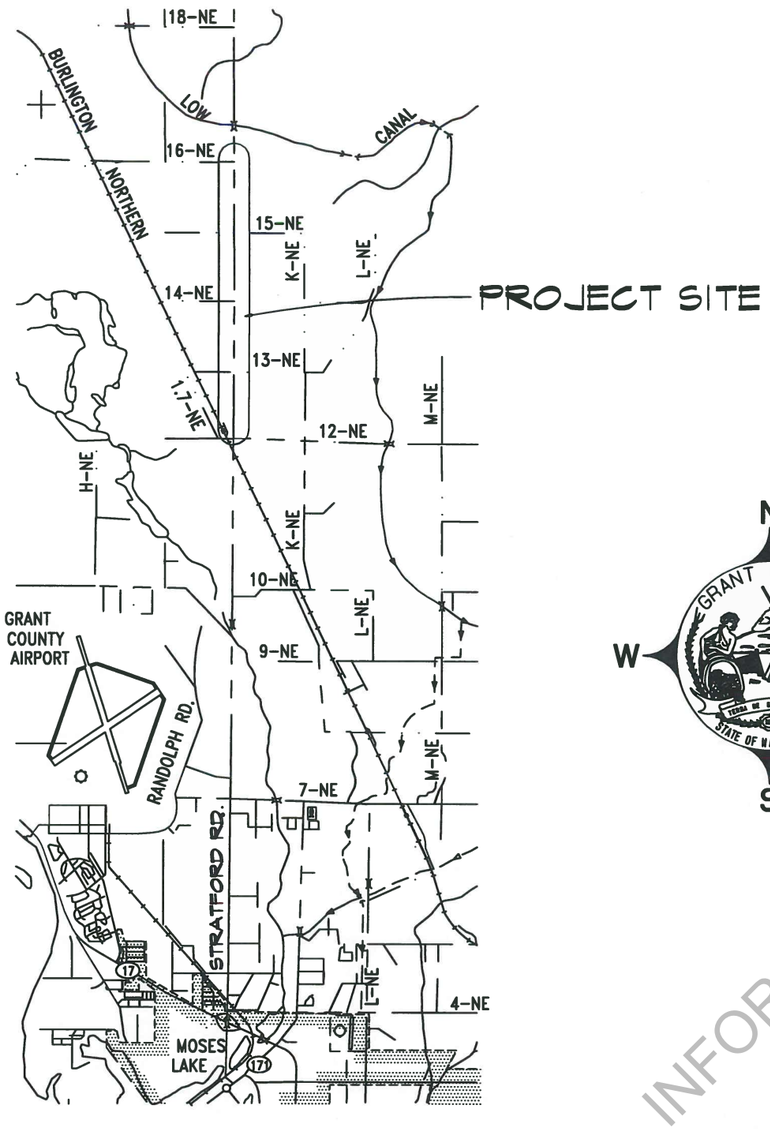

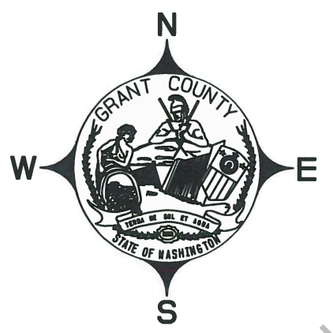

SHEET		DESCRIPTION
1	—	INDEX & VICINITY MAP
2	—	SUMMARY OF QUANTITIES
3 - 5	—	STRUCTURE NOTES
6 - 19	—	PLAN AND PROFILE
20	—	TYPICAL X-SECTIONS
21	—	TRAFFIC CONTROL PLAN

LEGEND

- POWER POLE
- TELEPHONE PED.
- FENCE LINE
- CULVERT
- CONTROL POINT
- MAILBOX

Grant County
Board Of Commissioners

Richard Stevens, District No. 1
Tom Taylor, District No. 2
Cindy Carter, District No. 3 (Chair)

INFORMATIONAL COPY ONLY - NOT FOR BIDDING

GRANT COUNTY PUBLIC WORKS DEPARTMENT
124 ENTERPRISE ST. SE
EPHRATA, WASHINGTON 98823
(509) 754-6082 FAX (509) 754-6087

STRATFORD ROAD RECONSTRUCTION

CRP 17-06

DESIGNED BY:	BOB BERSANTI
CHECKED BY:	SCOTT YAEGER
APPROVED BY:	SCOTT YAEGER
REVISIONS BY:	
DATE REVISED:	4/16/2020
FEDERAL AID NO.:	

SCOTT J YAEGER
STATE OF WASHINGTON
41439
REGISTERED
PROFESSIONAL ENGINEER

DATE: 4-21-2020

SUMMARY OF QUANTITIES

ITEM NO.	TOTAL QUANTITY	UNIT	ITEM DESCRIPTION	CRP 17-06 STRATFORD RD. STA. 9+50 TO STA. 222+50
			PREPARATION	
1	1	L.S.	Mobilization	1
2	1	L.S.	Clearing & Grubbing	1
			GRADING	
3	70,266	S.Y.	Rotomilling Bituminous Pavement	70,266
4	11,228	C.Y.	Roadway Excavation Including Haul	11,228
5	6,928	C.Y.	Embankment Compaction	6,928
			DRAINAGE	
6	341	L.F.	Plain Steel Culvert Pipe 0.064" Th. - 12" Diameter	341
7	247	L.F.	Plain Steel Culvert Pipe 0.064" Th. - 18" Diameter	247
			SURFACING	
8	29,350	TON	Crushed Surfacing Base Course	29,350
9	19,070	TON	Crushed Surfacing Top Course	19,070
			TRAFFIC	
10	1,050	L.F.	Beam Guardrail Type 31	1,050
11	4	EACH	Beam Guardrail Type 31 - Non-Flared Terminal	4
12	62,680	L.F.	Paint Line	62,680
			OTHER ITEMS	
13	1	L.S.	SPCC Plan	1
14	8	EACH	Monument	8
15	1	L.S.	Trimming and Cleanup	1
16	8	ACRE	Seeding, Fertilizing and Mulching with Roadside Mix	8
17	1.00	Dol.	Minor Change	1.00

NOTE: For Special Features See Special Provisions.

INFORMATIONAL COPY ONLY - NOT FOR BIDDING

GRANT COUNTY PUBLIC WORKS DEPARTMENT
124 ENTERPRISE ST. SE
EPHRATA, WASHINGTON 98823
(509) 754-6082 FAX (509) 754-6087

STRATFORD ROAD RECONSTRUCTION

CRP 17-06

DESIGNED BY:	BOB BERSANTI
CHECKED BY:	SCOTT YAEGER
APPROVED BY:	SCOTT YAEGER
REVISIONS BY:	
DATE REVISED:	4/16/2020
FEDERAL AID NO.:	

SCOTT J YAEGER
STATE OF WASHINGTON
41439
REGISTERED
PROFESSIONAL ENGINEER

DATE: 4-21-2020

STRUCTURE NOTES

NOTE: THE FIRST NUMBER OF THE "CODE" REFERS TO THE PLAN SHEET NUMBER OF THE CONTRACT PLANS. THE SECOND NUMBER REFERS TO THE CONSTRUCTION FEATURE FOUND ON THE PARTICULAR SHEET.

CODE	LOCATION	R/L	ELEV.	MISC.	Pl. St. Culvert Pipe 12" Dia. 0.064" Th. L.F.	Pl. St. Culvert Pipe 18" Dia. 0.064" Th. L.F.	Crushed Surfacing Base Course TONS	Crushed Surfacing Top Course TONS	Monument EACH								REMARKS
6-1	STA. 9+85 TO 10+13	L	PLAN	ROAD			50	35									4
6-2	STA. 9+83 TO 10+17	R	PLAN	ROAD			50	35									4
6-3	STA. 10+00.26	CL	PLAN	MON					1								5,6
6-4	STA. 10+00.26	CL	PLAN	MON					1								5,6
6-5	STA. 23+30 TO 23+50	L	PLAN	F		32		4									1,2,3
7-1	STA. 25+00 TO 25+30	R	PLAN	F	42			6									1,2,3
7-2	STA. 28+90 TO 29+10	R	PLAN	F				4									4
7-3	STA. 35+30 TO 35+60	R	PLAN	F				4									4
7-4	STA. 36+00 TO 36+20	L	PLAN	F				4									4
7-5	STA. 36+45.07	CL	PLAN	MON					1								5,6
7-6	STA. 37+50 TO 37+70	L	PLAN	F				4									4
8-1	STA. 49+50 TO 49+70	R	PLAN	F				4									4
9-1	STA. 56+10 TO 56+30	L	PLAN	F				4									4
9-2	STA. 57+70 TO 57+90	L	PLAN	O&M				4									4
9-3	STA. 57+70 TO 57+90	R	PLAN	O&M				4									4
9-4	STA. 62+76 TO 63+04	L	PLAN	ROAD			50	35									4
9-5	STA. 62+76 TO 63+04	R	PLAN	ROAD			50	35									4
9-6	STA. 62+90.48	CL	PLAN	MON					1								5,6
9-7	STA. 66+70 TO 66+90	L	PLAN	F				4									4
9-8	STA. 69+200 TO 69+40	R	PLAN	F	32			4									1,2,3
10-1	STA. 87+30 TO 87+60	R	PLAN	F	42			6									1,2,3
11-1	STA. 89+37.34	CL	PLAN	MON					1								5,6
11-2	STA. 89+40 TO 89+60	R	PLAN	F				4									4
11-3	STA. 93+60 TO 93+80	R	PLAN	F				4									4
11-4	STA. 95+70 TO 95+90	L	PLAN	F				4									4
11-5	STA. 96+80 TO 97+00	L	PLAN	F				4									4
11-6	STA. 98+90 TO 99+10	R	PLAN	F	32			4									1,2,3
11-7	STA. 101+90 TO 102+10	R	PLAN	O&M				4									4
11-8	STA. 102+40 TO 102+60	L	PLAN	O&M				4									4
11-9	STA. 102+80 TO 103+00	R	PLAN	F				4									4
12-1	STA. 106+70 TO 106+90	L	PLAN	F				4									4
12-2	STA. 112+10 TO 112+30	L	PLAN	F				4									4
				PAGE TOTALS	148	32	200	236	5								

GENERAL NOTES

Miscellaneous

BD = Bottom of Ditch
CP = Catch point
CROSS = Crossing Pipe
F = Farm
PLAN = Elevation on Plans
MON = Monument
O&M = O&M Road
RAIL = Guardrail

1. Field adjust termini as directed by the engineer.
2. Install 3:1 beveled end sections per standard plans.
3. Remove existing culvert and salvage to contractor.
4. Quantities for embankment and roadway excavation are included in plan quantities whether shown or not.
5. Remove existing monument, if necessary, and case and cover and salvage to contractor.
6. Install monument and case and cover per standard plans.
7. Install Beam Guardrail Non-Flared Terminal Type 31, per standard plan C-22.40-06.
8. Install Beam Guardrail Type 31.

NOTE: For Special Features See Special Provisions.

INFORMATIONAL COPY ONLY - NOT FOR BIDDING

GRANT COUNTY PUBLIC WORKS DEPARTMENT
124 ENTERPRISE ST. SE
EPHRATA, WASHINGTON 98823
(509) 754-6082 FAX (509) 754-6087

STRATFORD ROAD RECONSTRUCTION

CRP 17-06

DESIGNED BY:	BOB BERSANTI
CHECKED BY:	SCOTT YAEGER
APPROVED BY:	SCOTT YAEGER
REVISIONS BY:	
DATE REVISED:	4/16/2020
FEDERAL AID NO.:	

SCOTT J YAEGER
STATE OF WASHINGTON
41439
REGISTERED
PROFESSIONAL ENGINEER

DATE: 4-21-2020

STRUCTURE NOTES

NOTE: THE FIRST NUMBER OF THE "CODE" REFERS TO THE PLAN SHEET NUMBER OF THE CONTRACT PLANS. THE SECOND NUMBER REFERS TO THE CONSTRUCTION FEATURE FOUND ON THE PARTICULAR SHEET.

CODE	LOCATION	R/L	ELEV.	MISC.	Pl. St. Culvert Pipe 12" Dia. 0.064" Th. L.F.	Pl. St. Culvert Pipe 18" Dia. 0.064" Th. L.F.	Crushed Surfacing Base Course TONS	Crushed Surfacing Top Course TONS	Beam Guardrail Type 31 L.F.	Beam Guardrail Non-Flared Terminal Type 31 EA.	Monument EACH						REMARKS
12-3	STA. 115+70 TO 115+98	L	PLAN	ROAD			50	35									4
12-4	STA. 117+50 TO 117+70	L	PLAN	O&M				4									4
12-5	STA. 117+60 TO 117+80	R	PLAN	O&M				4									4
13-1	STA. 125+00 TO 125+30	L	PLAN	F				6									4
13-2	STA. 128+05	L/R	BD	CROSS		80											1,2,3
13-3	STA. 132+80 TO 133+00	L	PLAN	F				4									4
13-4	STA. 135+20 TO 135+50	R	PLAN	F				6									4
13-5	STA. 135+20 TO 135+40	L	PLAN	F				4									4
14-1	STA. 136+50 TO 136+70	L	PLAN	F				4									4
14-2	STA. 139+80 TO 140+80	L	PLAN	F				10									4
14-3	STA. 142+32.76	CL	PLAN	MON							1						5,6
14-4	STA. 143+00 TO 143+20	L	PLAN	F	32			4									1,2,3
14-5	STA. 143+30 TO 143+50	R	PLAN	F				4									4
14-6	STA. 144+00 TO 152+00	R	PLAN	RAIL					700	2							7,8,9
14-7	STA. 147+50 TO 152+00	L	PLAN	RAIL					350	2							7,8,9
15-1	STA. 155+85 TO 156+15	R	PLAN	F				4									4
15-2	STA. 157+50 TO 157+70	R	PLAN	F				4									4
15-3	STA. 157+70 TO 157+90	L	PLAN	F				4									4
15-4	STA. 158+70 TO 158+90	L	PLAN	O&M				4									4
15-5	STA. 1159+90 TO 160+40	R	PLAN	O&M				6									4
15-6	STA. 164+60 TO 165+00	R	PLAN	F				6									4
15-7	STA. 166+10 TO 166+30	R	PLAN	F	32			4									1,2,3
15-8	STA. 167+60 TO 167+80	L	PLAN	F				4									4
16-1	STA. 168+60	L/R	BD	CROSS		70											1,2,3
16-2	STA. 168+67 TO 168+95	L	PLAN	ROAD			50	35									4
16-3	STA. 168+67 TO 168+95	R	PLAN	ROAD			50	35									4
16-4	STA. 168+81.27	CL	PLAN	MON							1						5,6
16-5	STA. 173+90 TO 174+10	R	PLAN	F				4									4
16-6	STA. 183+50 TO 183+70	R	PLAN	F				4									4
17-1	STA. 189+00 TO 189+20	L	PLAN	F	32			4									1,2,3
17-2	STA. 189+00 TO 189+20	R	PLAN	F				4									4
17-3	STA. 189+80 TO 190+00	L	PLAN	F	32			4									1,2,3
17-4	STA. 191+80 TO 182+30	L	PLAN	F	65			6									1,2,3
17-5	STA. 195+25.91	CL	PLAN	MON					1								5,6
				PAGE TOTALS	193	150	100	174	1,050	4	2						

GENERAL NOTES

Miscellaneous

BD = Bottom of Ditch
CP = Catch point
CROSS = Crossing Pipe
F = Farm
PLAN = Elevation on Plans
MON = Monument
O&M = O&M Road
RAIL = Guardrail

1. Field adjust termini as directed by the engineer.
2. Install 3:1 beveled end sections per standard plans.
3. Remove existing culvert and salvage to contractor.
4. Quantities for embankment and roadway excavation are included in plan quantities whether shown or not.
5. Remove existing monument, if necessary, and case and cover and salvage to contractor.
6. Install monument and case and cover per standard plans.
7. Install Beam Guardrail Non-Flared Terminal Type 31, per standard plan C-22.40-06.
8. Install Beam Guardrail Type 31.

NOTE: For Special Features See Special Provisions.

INFORMATIONAL COPY ONLY - NOT FOR BIDDING

GRANT COUNTY PUBLIC WORKS DEPARTMENT
124 ENTERPRISE ST. SE
EPHRATA, WASHINGTON 98823
(509) 754-6082 FAX (509) 754-6087

STRATFORD ROAD RECONSTRUCTION

CRP 17-06

DESIGNED BY:	BOB BERSANTI
CHECKED BY:	SCOTT YAEGER
APPROVED BY:	SCOTT YAEGER
REVISIONS BY:	
DATE REVISED:	4/16/2020
FEDERAL AID NO.:	

SCOTT J YAEGER
STATE OF WASHINGTON
41439
REGISTERED PROFESSIONAL ENGINEER

DATE: 4-21-2020

STRUCTURE NOTES

NOTE: THE FIRST NUMBER OF THE "CODE" REFERS TO THE PLAN SHEET NUMBER OF THE CONTRACT PLANS. THE SECOND NUMBER REFERS TO THE CONSTRUCTION FEATURE FOUND ON THE PARTICULAR SHEET.

CODE	LOCATION	R/L	ELEV.	MISC.	Pl. St. Culvert Pipe 12" Dia. 0.064" Th. L.F.	Pl. St. Culvert Pipe 18" Dia. 0.064" Th. L.F.	Crushed Surfacing Base Course TONS	Crushed Surfacing Top Course TONS	Monument								REMARKS
18-1	STA. 199+90 TO 200+10	R	PLAN	F				4									4
18-2	STA. 208+10	L/R	BD	CROSS		65											1,2,3
18-3	STA. 208+40 TO 208+80	R	PLAN	F				6									4
18-4	STA. 212+60 TO 212+80	R	PLAN	F				4									4
19-1	STA. 221+55 TO 221+83	L	PLAN	ROAD			50	35									4
19-2	STA. 221+40 TO 221+60	R	PLAN	F				4									4
19-3	STA. 221+69.53	CL	PLAN	MON					1								5,6
	PAGE TOTALS				0	65	50	53	1								

GENERAL NOTES

Miscellaneous

BD = Bottom of Ditch
CP = Catch point
CROSS = Crossing Pipe
F = Farm
PLAN = Elevation on Plans
MON = Monument
O&M = O&M Road
RAIL = Guardrail

1. Field adjust termini as directed by the engineer.
2. Install 3:1 beveled end sections per standard plans.
3. Remove existing culvert and salvage to contractor.
4. Quantities for embankment and roadway excavation are included in plan quantities whether shown or not.
5. Remove existing monument, if necessary, and case and cover and salvage to contractor.
6. Install monument and case and cover per standard plans.
7. Install Beam Guardrail Non-Flared Terminal Type 31, per standard plan C-22.40-06.
8. Install Beam Guardrail Type 31.

NOTE: For Special Features See Special Provisions.

INFORMATIONAL COPY ONLY - NOT FOR BIDDING

GRANT COUNTY PUBLIC WORKS DEPARTMENT
124 ENTERPRISE ST. SE
EPHRATA, WASHINGTON 98823
(509) 754-6082 FAX (509) 754-6087

STRATFORD ROAD RECONSTRUCTION

CRP 17-06

DESIGNED BY:	BOB BERSANTI
CHECKED BY:	SCOTT YAEGER
APPROVED BY:	SCOTT YAEGER
REVISIONS BY:	
DATE REVISED:	4/16/2020
FEDERAL AID NO.:	

SCOTT J YAEGER
STATE OF WASHINGTON
41439
REGISTERED
PROFESSIONAL ENGINEER

DATE: 4-21-2020

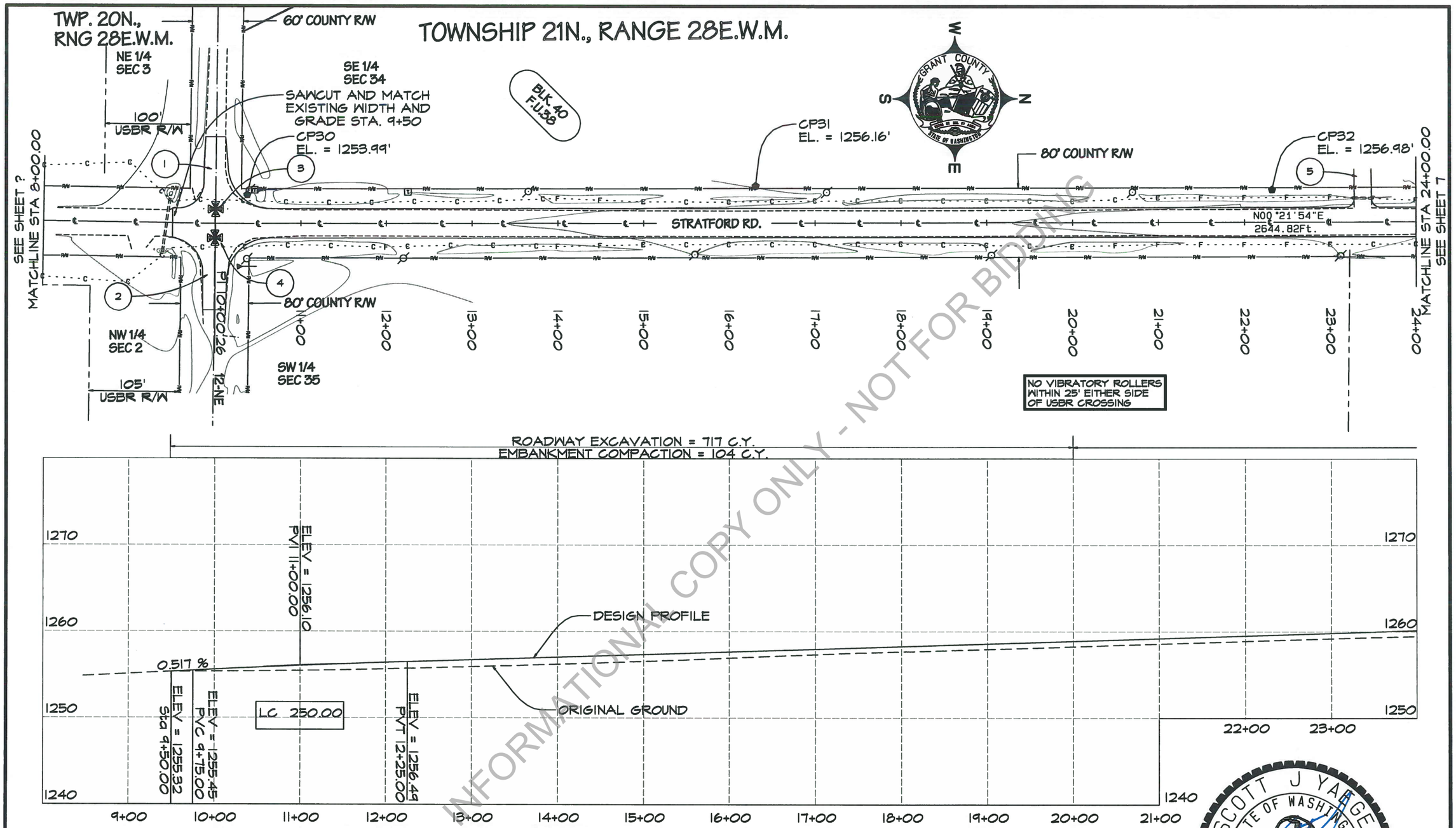

INFORMATIONAL COPY ONLY - NOT FOR BIDDING

GRANT COUNTY PUBLIC WORKS DEPARTMENT
124 ENTERPRISE ST. SE
EPHRATA, WASHINGTON 98823
(509) 754-6082 FAX (509) 754-6087

STRATFORD ROAD RECONSTRUCTION

CRP 17-06

DESIGNED BY:	BOB BERSANTI
CHECKED BY:	SCOTT YAEGER
APPROVED BY:	SCOTT YAEGER
REVISIONS BY:	
DATE REVISED:	4/16/2020
FEDERAL AID NO.:	

SCOTT J YAEGER
STATE OF WASHINGTON
41439
REGISTERED PROFESSIONAL ENGINEER

DATE: 4-21-2020

TOWNSHIP 21N., RANGE 28E.W.M.

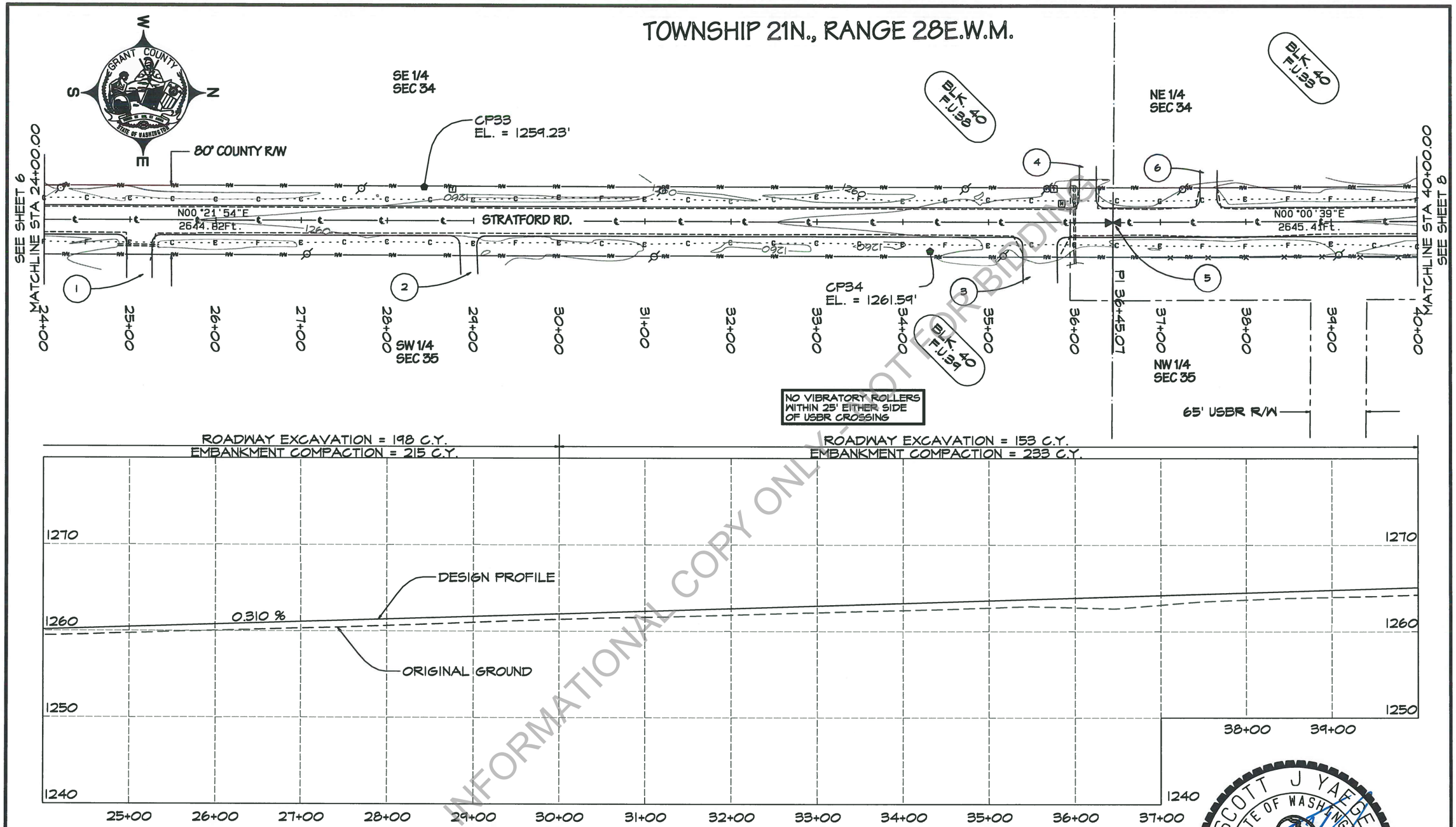

INFORMATIONAL COPY ONLY - NOT FOR BIDDING

GRANT COUNTY PUBLIC WORKS DEPARTMENT
124 ENTERPRISE ST. SE
EPHRATA, WASHINGTON 98823
(509) 754-6082 FAX (509) 754-6087

GRANT COUNTY
TERRA DE SOL ET AQUA
STATE OF WASHINGTON

STRATFORD ROAD
RECONSTRUCTION

CRP 17-06

DESIGNED BY:	BOB BERSANTI
CHECKED BY:	SCOTT YAEGER
APPROVED BY:	SCOTT YAEGER
REVISIONS BY:	
DATE REVISED:	4/16/2020
FEDERAL AID NO.:	

SCOTT J YAEGER
STATE OF WASHINGTON
41439
REGISTERED
PROFESSIONAL ENGINEER

DATE: 4-21-2020

TOWNSHIP 21N., RANGE 28E.W.M.

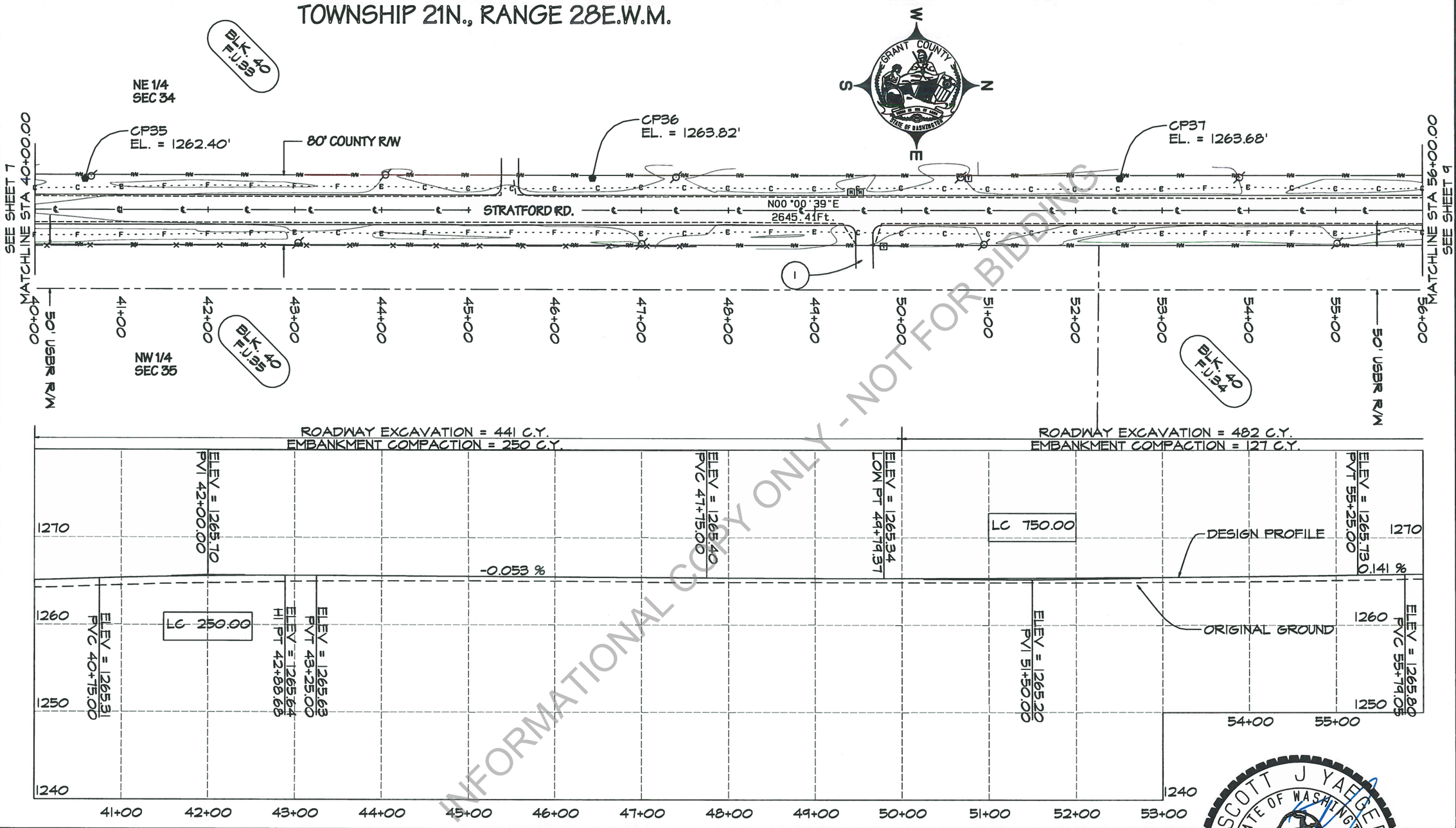

INFORMATIONAL COPY ONLY - NOT FOR BIDDING

GRANT COUNTY PUBLIC WORKS DEPARTMENT
124 ENTERPRISE ST. SE
EPHRATA, WASHINGTON 98823
(509) 754-6082 FAX (509) 754-6087

STRATFORD ROAD RECONSTRUCTION

CRP 17-06

DESIGNED BY:	BOB BERSANTI
CHECKED BY:	SCOTT YAEGER
APPROVED BY:	SCOTT YAEGER
REVISIONS BY:	
DATE REVISED:	4/16/2020
FEDERAL AID NO.:	

SCOTT J YAEGER
STATE OF WASHINGTON
41439
REGISTERED
PROFESSIONAL ENGINEER

DATE: 4-21-2020

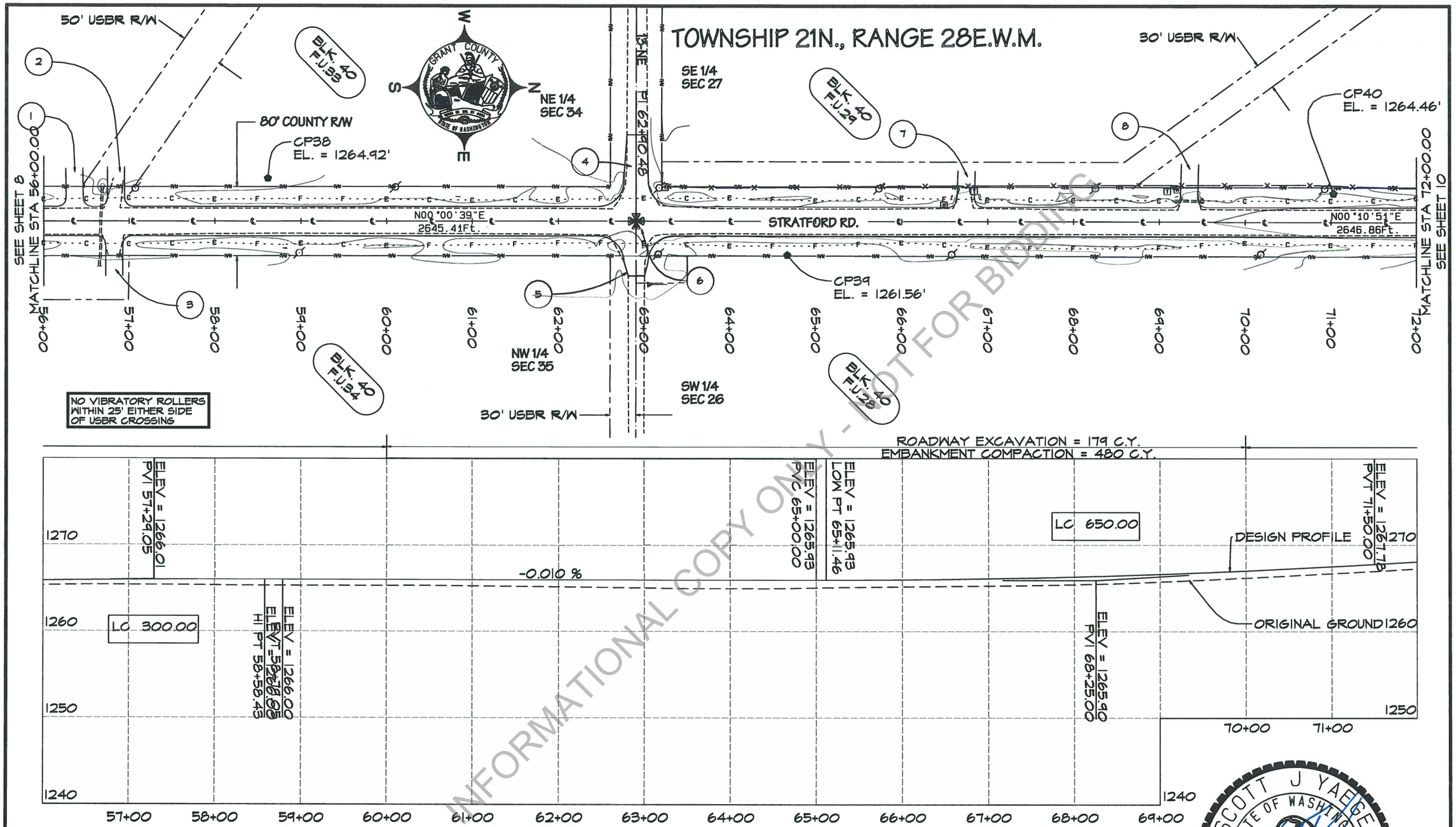

INFORMATIONAL COPY ONLY - NOT FOR BIDDING

GRANT COUNTY PUBLIC WORKS DEPARTMENT
124 ENTERPRISE ST. SE
EPHRATA, WASHINGTON 98823
(509) 754-6082 FAX (509) 754-6087

GRANT COUNTY
TERRA DE SOL ET AQUA
STATE OF WASHINGTON

STRATFORD ROAD RECONSTRUCTION

CRP 17-06

DESIGNED BY:	BOB BERSANTI
CHECKED BY:	SCOTT YAEGER
APPROVED BY:	SCOTT YAEGER
REVISIONS BY:	
DATE REVISED:	4/16/2020
FEDERAL AID NO.:	

SCOTT J YAEGER
STATE OF WASHINGTON
41439
REGISTERED
PROFESSIONAL ENGINEER

DATE: 4-21-2020

TOWNSHIP 21N., RANGE 28E.W.M.

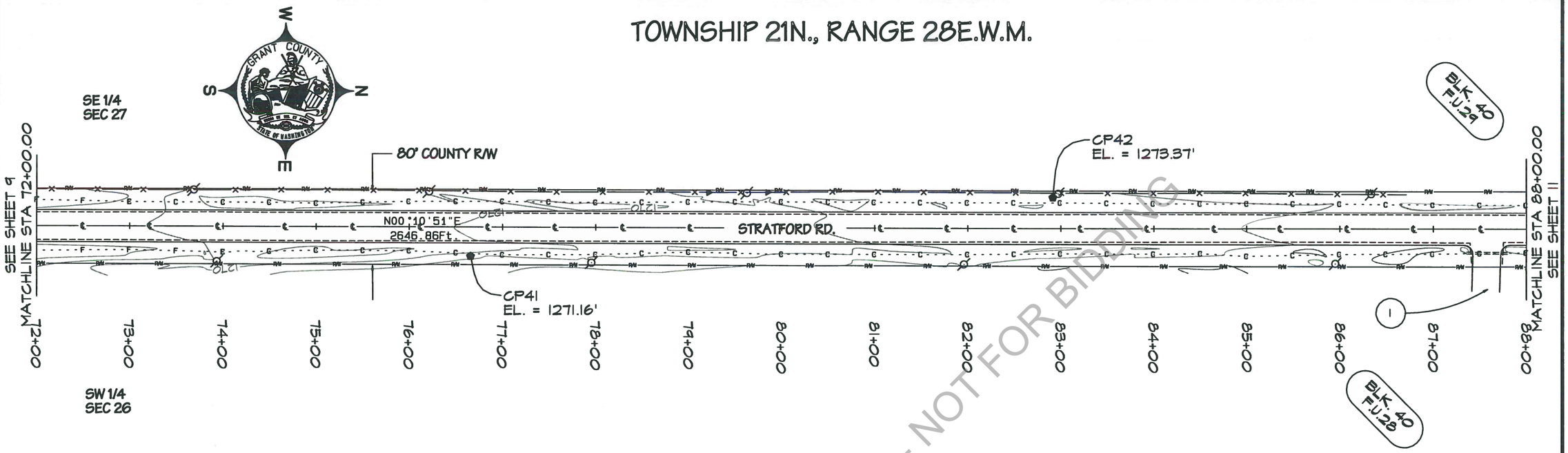

ROADWAY EXCAVATION = 490 C.Y.
EMBANKMENT COMPACTION = 124 C.Y.

ROADWAY EXCAVATION = 532 C.Y.
EMBANKMENT COMPACTION = 87 C.Y.

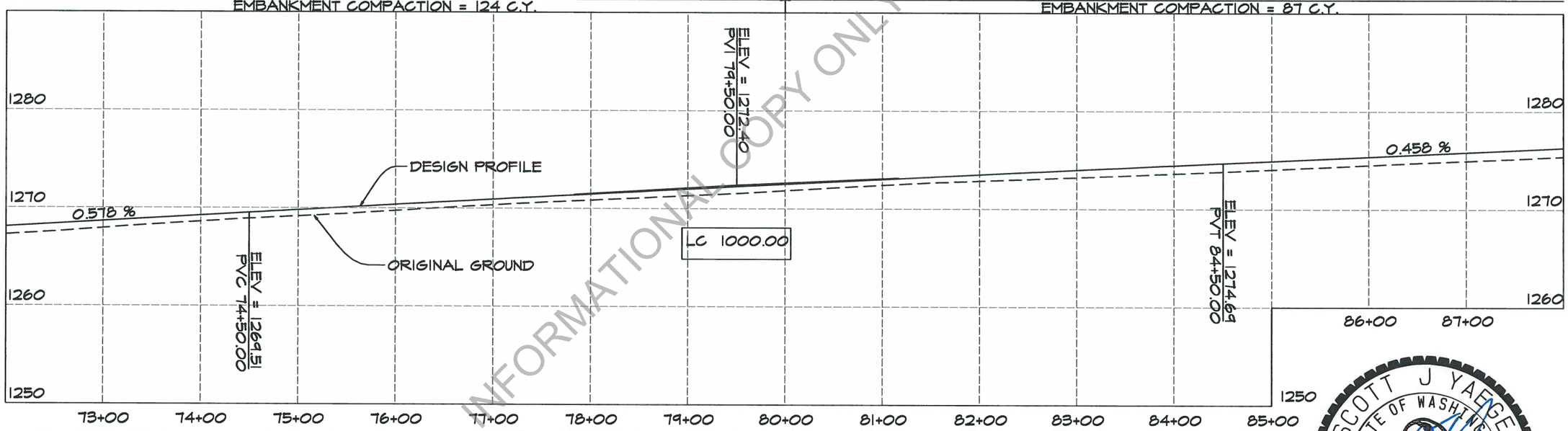

INFORMATIONAL COPY ONLY - NOT FOR BIDDING

GRANT COUNTY PUBLIC WORKS DEPARTMENT
124 ENTERPRISE ST. SE
EPHRATA, WASHINGTON 98823
(509) 754-6082 FAX (509) 754-6087

STRATFORD ROAD
RECONSTRUCTION

CRP 17-06

DESIGNED BY:	BOB BERSANTI
CHECKED BY:	SCOTT YAEGER
APPROVED BY:	SCOTT YAEGER
REVISIONS BY:	
DATE REVISED:	4/16/2020
FEDERAL AID NO.:	

SCOTT J YAEGER
STATE OF WASHINGTON
41439
REGISTERED
PROFESSIONAL ENGINEER

DATE: 4-21-2020

TOWNSHIP 21N., RANGE 28E.W.M.

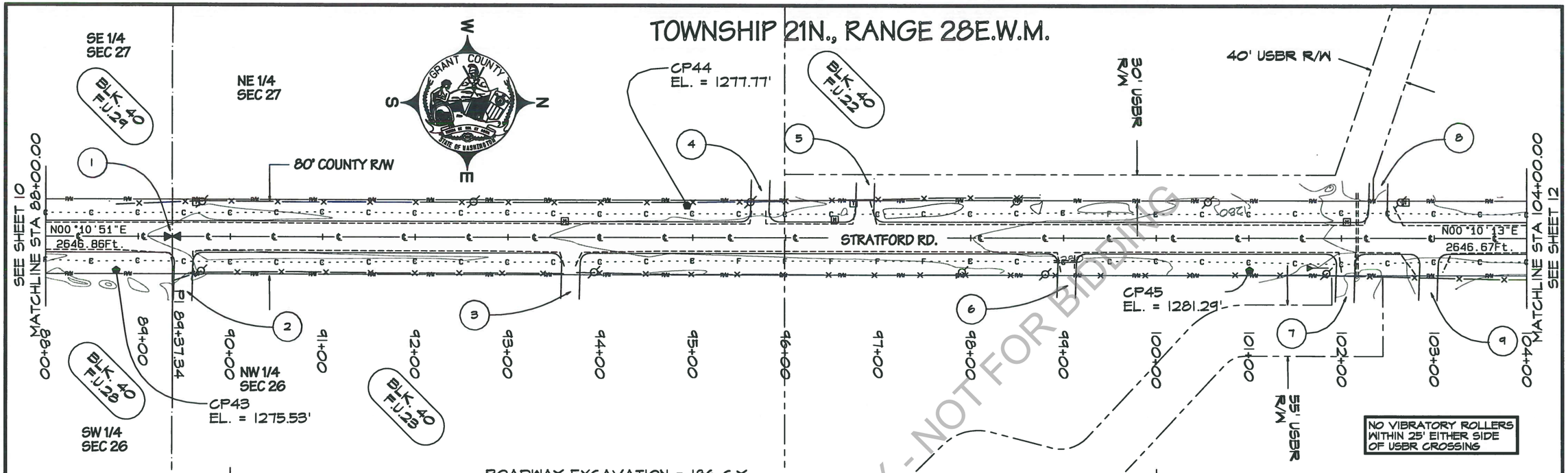

ROADWAY EXCAVATION = 186 C.Y.
EMBANKMENT COMPACTION = 292 C.Y.

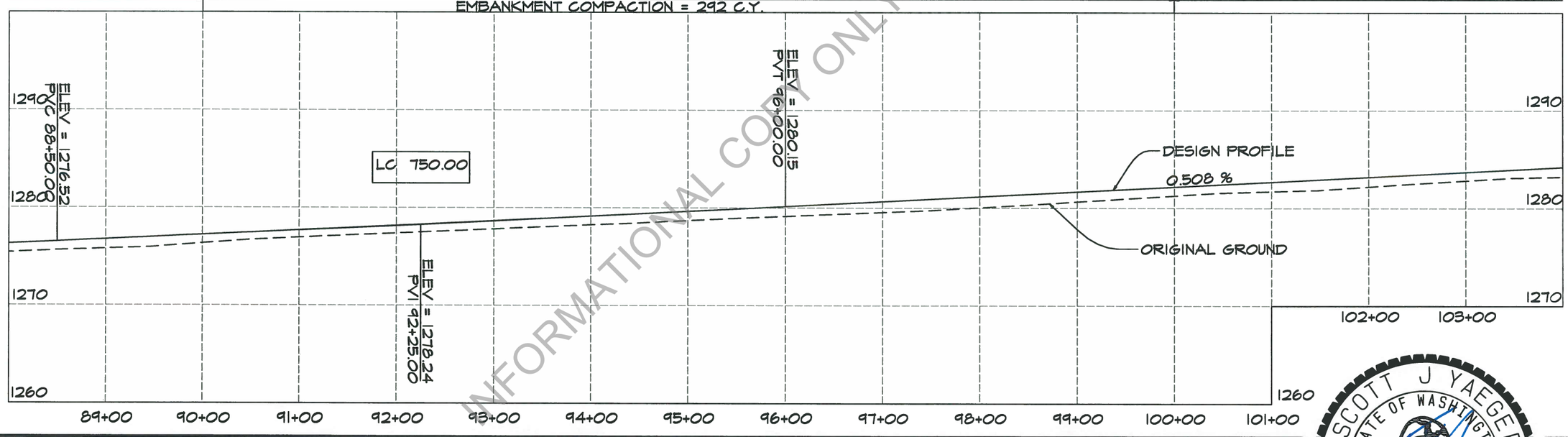

INFORMATIONAL COPY ONLY - NOT FOR BIDDING

GRANT COUNTY PUBLIC WORKS DEPARTMENT
124 ENTERPRISE ST. SE
EPHRATA, WASHINGTON 98823
(509) 754-6082 FAX (509) 754-6087

STRATFORD ROAD RECONSTRUCTION

CRP 17-06

DESIGNED BY:	BOB BERSANTI
CHECKED BY:	SCOTT YAEGER
APPROVED BY:	SCOTT YAEGER
REVISIONS BY:	
DATE REVISED:	4/16/2020
FEDERAL AID NO.:	

SCOTT J YAEGER
STATE OF WASHINGTON
41439
REGISTERED
PROFESSIONAL ENGINEER

DATE: 4-21-2020

TOWNSHIP 21N., RANGE 28E.W.M.

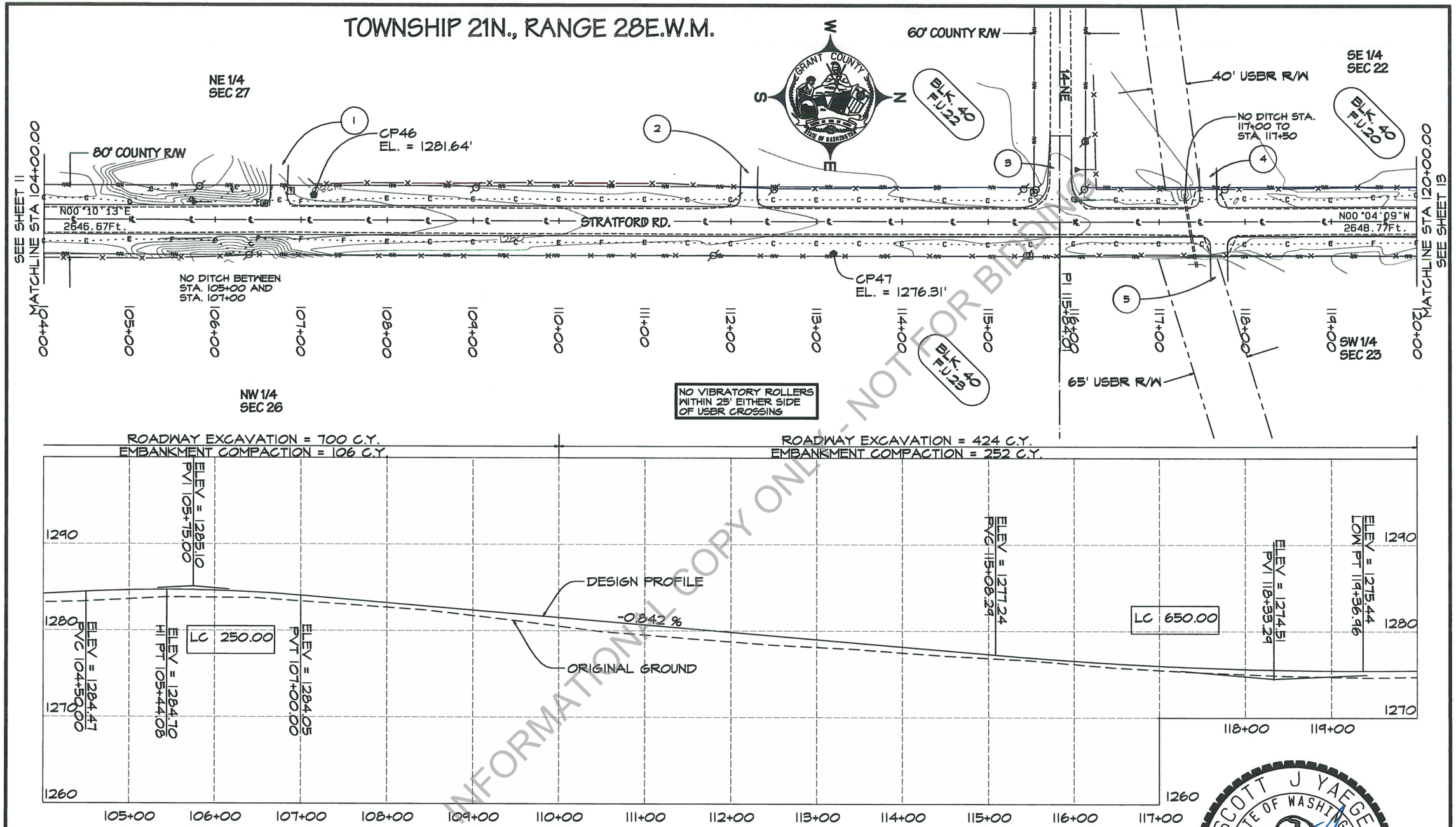

INFORMATIONAL COPY ONLY - NOT FOR BIDDING

GRANT COUNTY PUBLIC WORKS DEPARTMENT
124 ENTERPRISE ST. SE
EPHRATA, WASHINGTON 98823
(509) 754-6082 FAX (509) 754-6087

STRATFORD ROAD
RECONSTRUCTION

CRP 17-06

DESIGNED BY:	BOB BERSANTI
CHECKED BY:	SCOTT YAEGER
APPROVED BY:	SCOTT YAEGER
REVISIONS BY:	
DATE REVISED:	4/16/2020
FEDERAL AID NO.:	

SCOTT J YAEGER
STATE OF WASHINGTON
41439
REGISTERED
PROFESSIONAL ENGINEER

DATE: 4-21-2020

TOWNSHIP 21N., RANGE 28E.W.M.

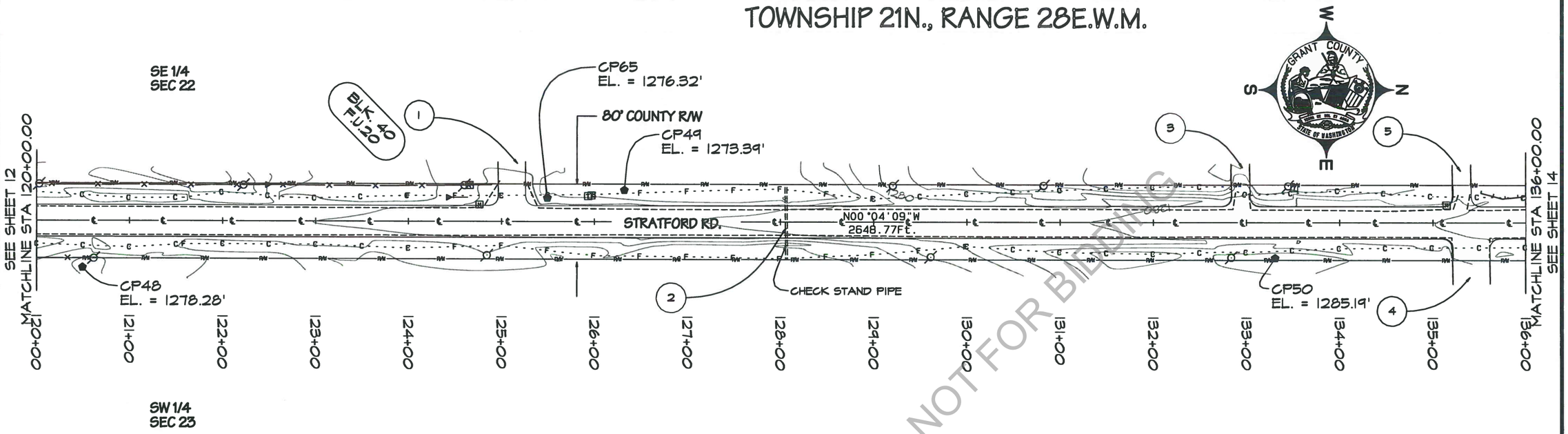

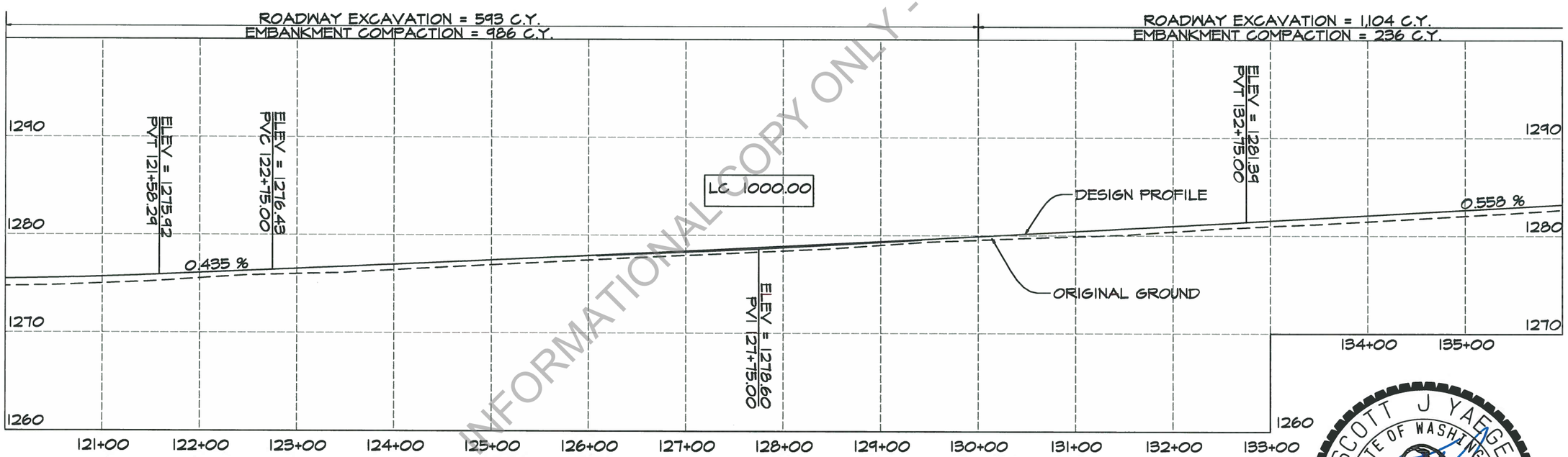

INFORMATIONAL COPY ONLY - NOT FOR BIDDING

GRANT COUNTY PUBLIC WORKS DEPARTMENT
124 ENTERPRISE ST. SE
EPHRATA, WASHINGTON 98823
(509) 754-6082 FAX (509) 754-6087

GRANT COUNTY
TERRA DE SOL ET AQUA
STATE OF WASHINGTON

STRATFORD ROAD RECONSTRUCTION

CRP 17-06

DESIGNED BY:	BOB BERSANTI
CHECKED BY:	SCOTT YAEGER
APPROVED BY:	SCOTT YAEGER
REVISIONS BY:	
DATE REVISED:	4/16/2020
FEDERAL AID NO.:	

SCOTT J YAEGER
STATE OF WASHINGTON
41439
REGISTERED
PROFESSIONAL ENGINEER

DATE: 4-21-2020

TOWNSHIP 21N., RANGE 28E.W.M.

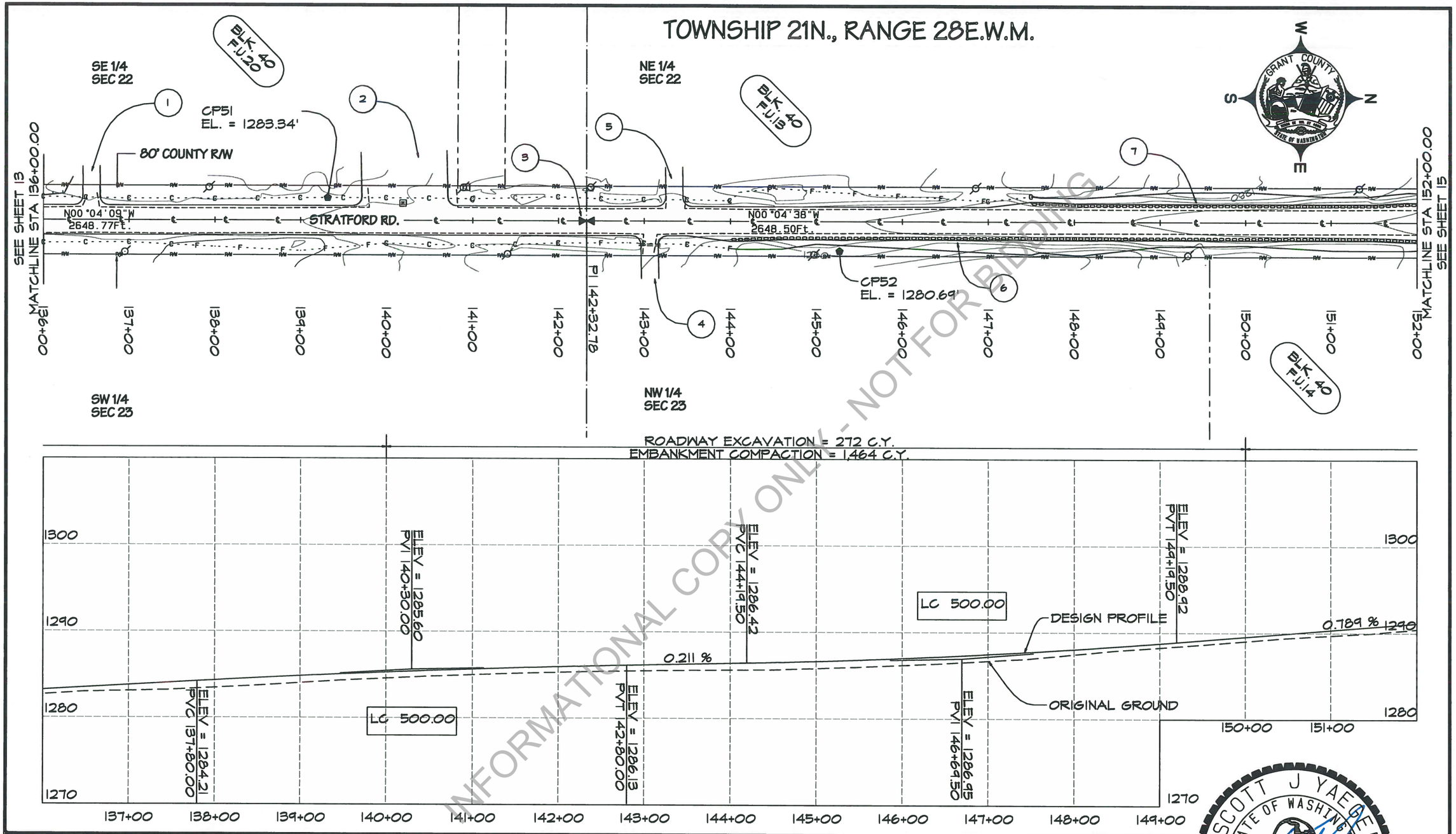

INFORMATIONAL COPY ONLY - NOT FOR BIDDING

GRANT COUNTY PUBLIC WORKS DEPARTMENT
124 ENTERPRISE ST. SE
EPHRATA, WASHINGTON 98823
(509) 754-6082 FAX (509) 754-6087

GRANT COUNTY
TERRA DE SOL ET AQUA
STATE OF WASHINGTON

STRATFORD ROAD RECONSTRUCTION

CRP 17-06

DESIGNED BY:	BOB BERSANTI
CHECKED BY:	SCOTT YAEGER
APPROVED BY:	SCOTT YAEGER
REVISIONS BY:	
DATE REVISED:	4/16/2020
FEDERAL AID NO.:	

SCOTT J YAEGER
STATE OF WASHINGTON
41499
REGISTERED
PROFESSIONAL ENGINEER

DATE: 4-21-2020

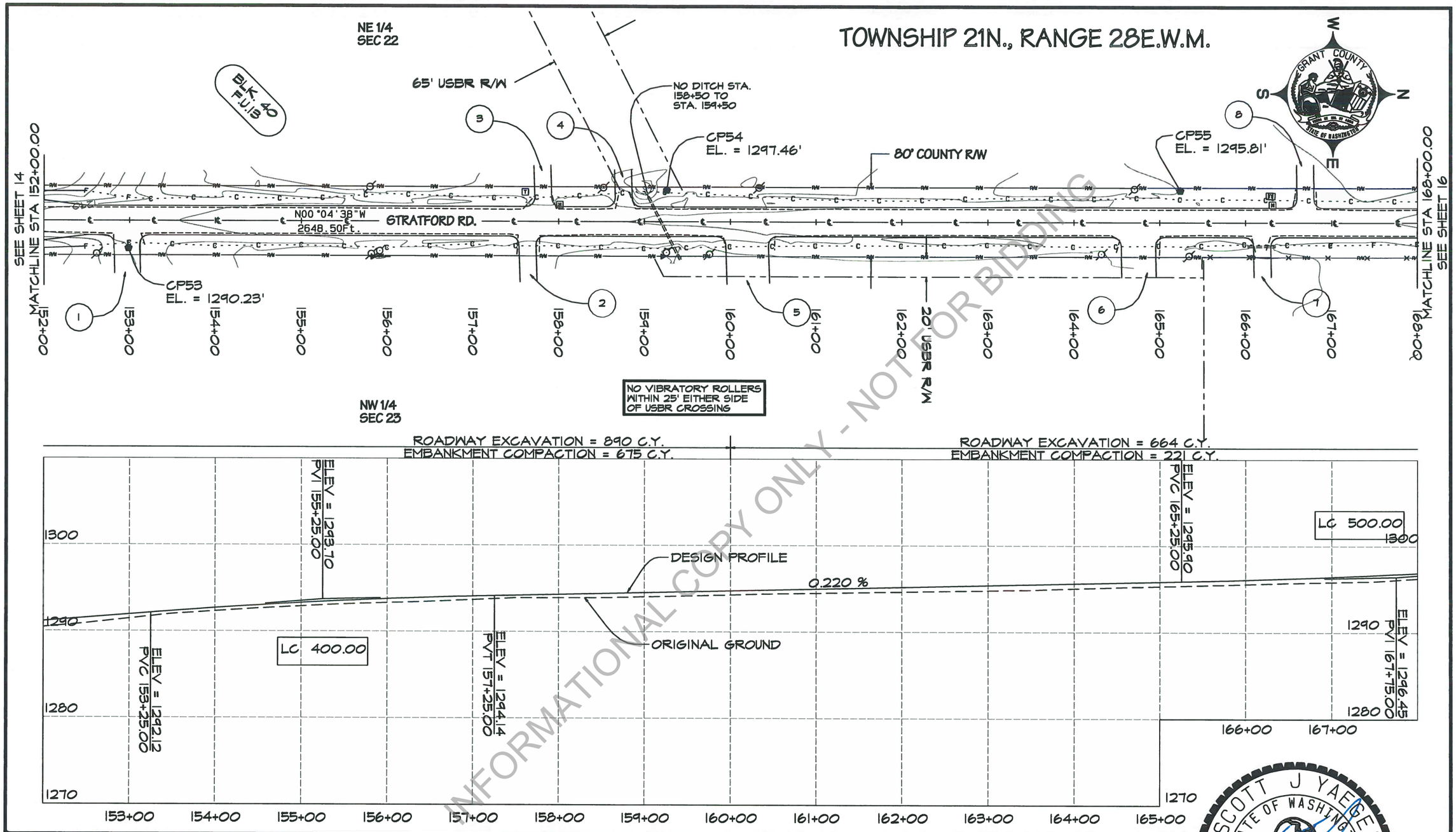

INFORMATIONAL COPY ONLY - NOT FOR BIDDING

GRANT COUNTY PUBLIC WORKS DEPARTMENT
124 ENTERPRISE ST. SE
EPHRATA, WASHINGTON 98823
(509) 754-6082 FAX (509) 754-6087

GRANT COUNTY
TERRA DE SOL ET AQUA
STATE OF WASHINGTON

STRATFORD ROAD RECONSTRUCTION

CRP 17-06

DESIGNED BY:	BOB BERSANTI
CHECKED BY:	SCOTT YAEGER
APPROVED BY:	SCOTT YAEGER
REVISIONS BY:	
DATE REVISED:	4/16/2020
FEDERAL AID NO.:	

SCOTT J YAEGER
STATE OF WASHINGTON
41439
REGISTERED
PROFESSIONAL ENGINEER

DATE: 4-21-2020

TOWNSHIP 21N., RANGE 28E.W.M.

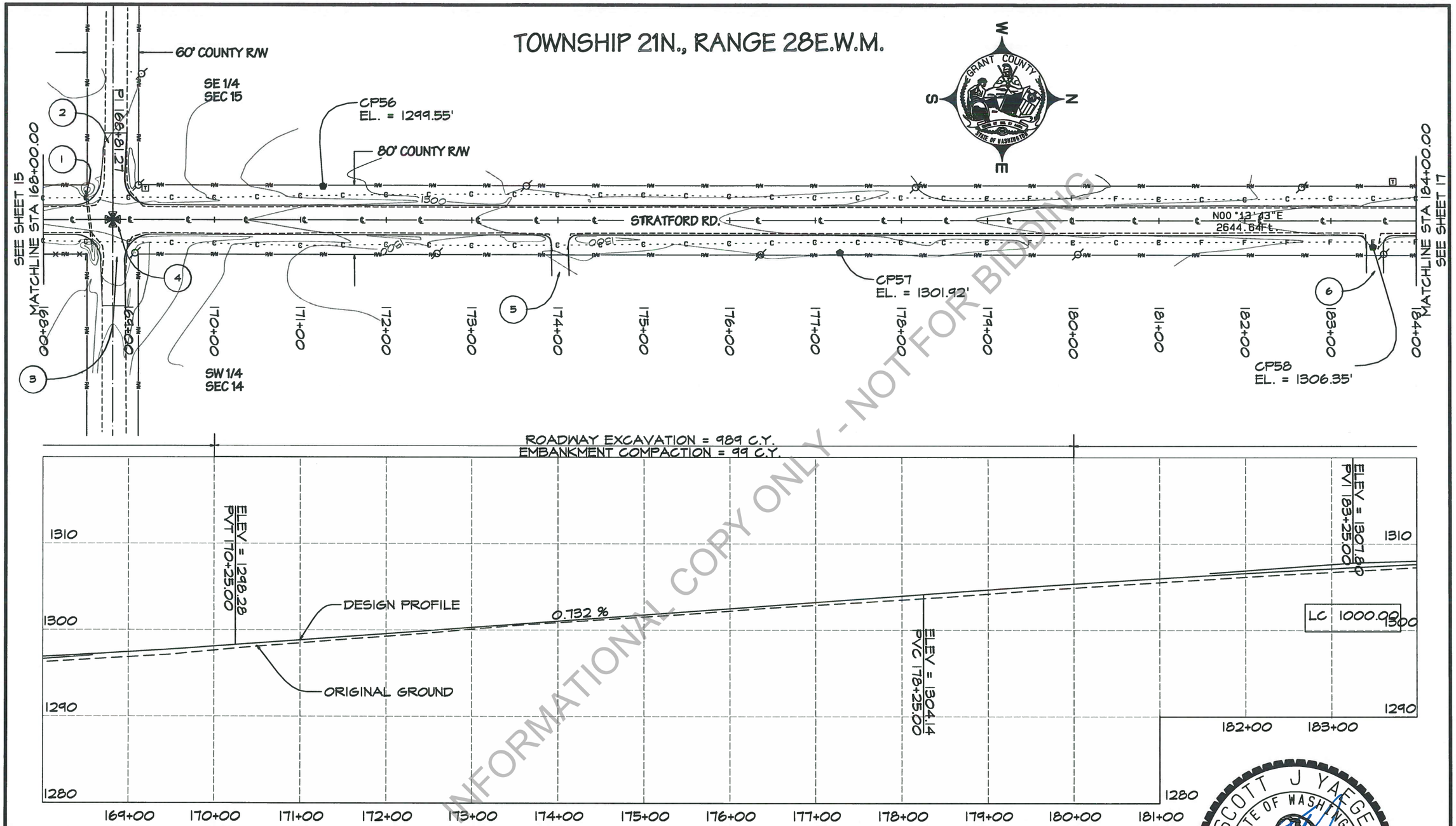

INFORMATIONAL COPY ONLY - NOT FOR BIDDING

GRANT COUNTY PUBLIC WORKS DEPARTMENT
124 ENTERPRISE ST. SE
EPHRATA, WASHINGTON 98823
(509) 754-6082 FAX (509) 754-6087

STRATFORD ROAD RECONSTRUCTION

CRP 17-06

DESIGNED BY:	BOB BERSANTI
CHECKED BY:	SCOTT YAEGER
APPROVED BY:	SCOTT YAEGER
REVISIONS BY:	
DATE REVISED:	4/16/2020
FEDERAL AID NO.:	

SCOTT J YAEGER
STATE OF WASHINGTON
41439
REGISTERED PROFESSIONAL ENGINEER

DATE: 4-21-2020

TOWNSHIP 21N., RANGE 28E.W.M.

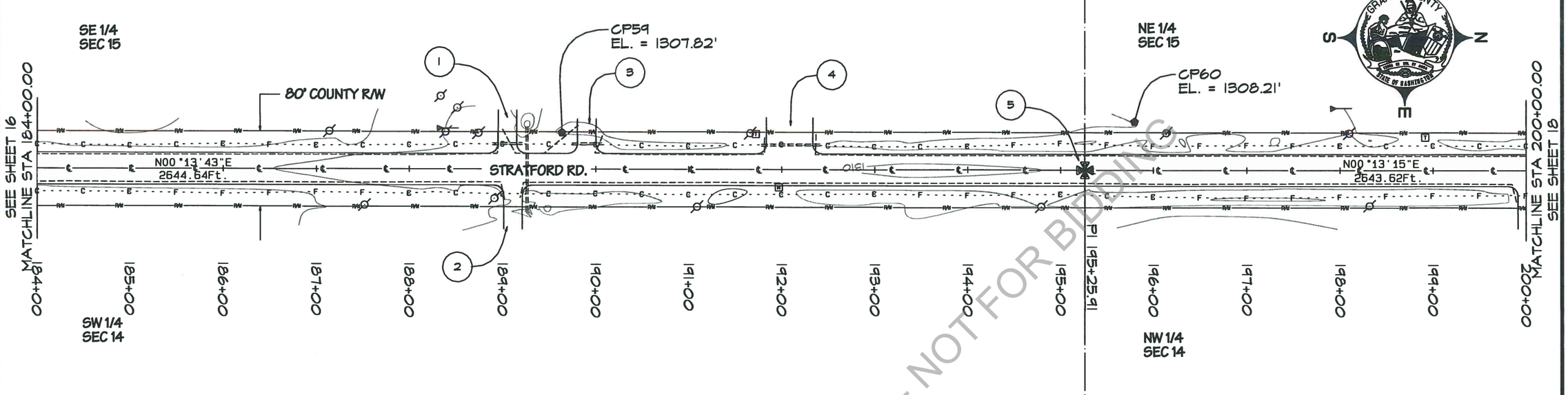

ROADWAY EXCAVATION = 531 C.Y.
EMBANKMENT COMPACTION = 153 C.Y.

ROADWAY EXCAVATION = 567 C.Y.
EMBANKMENT COMPACTION = 217 C.Y.

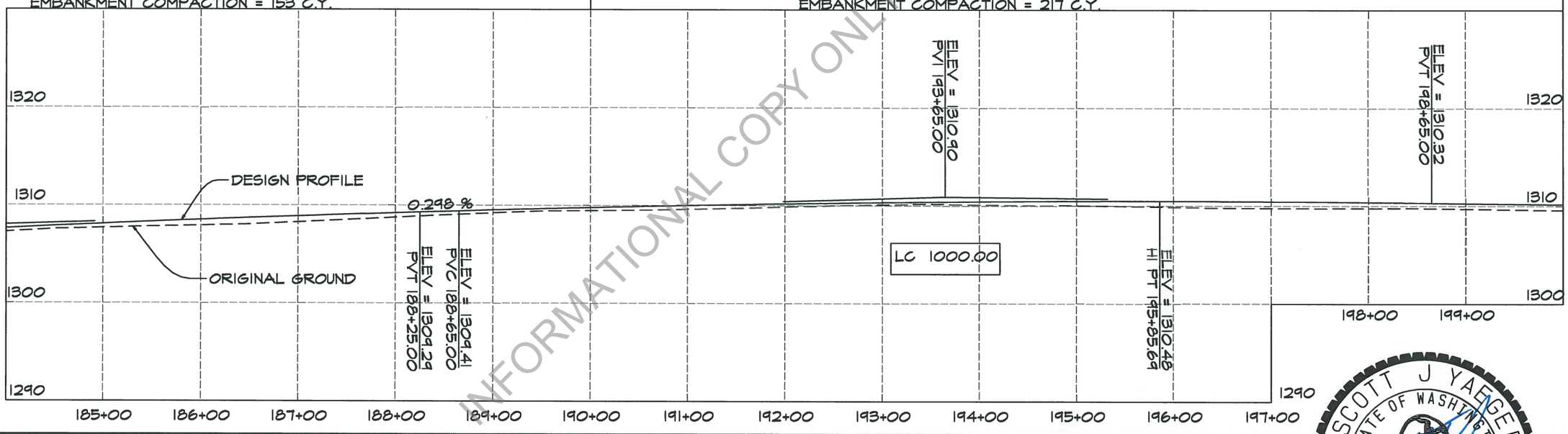

INFORMATIONAL COPY ONLY - NOT FOR BIDDING

GRANT COUNTY PUBLIC WORKS DEPARTMENT
124 ENTERPRISE ST. SE
EPHRATA, WASHINGTON 98823
(509) 754-6082 FAX (509) 754-6087

STRATFORD ROAD
RECONSTRUCTION

CRP 17-06

DESIGNED BY:	BOB BERSANTI
CHECKED BY:	SCOTT YAEGER
APPROVED BY:	SCOTT YAEGER
REVISIONS BY:	
DATE REVISED:	4/16/2020
FEDERAL AID NO.:	

SCOTT J YAEGER
STATE OF WASHINGTON
41439
REGISTERED
PROFESSIONAL ENGINEER

DATE: 4-21-2020

TOWNSHIP 21N., RANGE 28E.W.M.

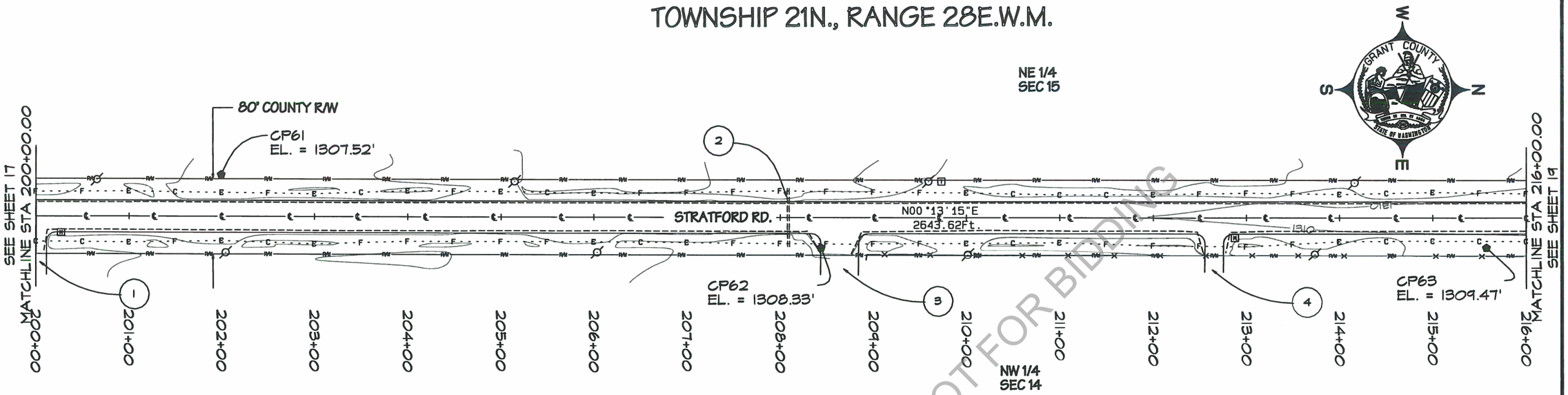

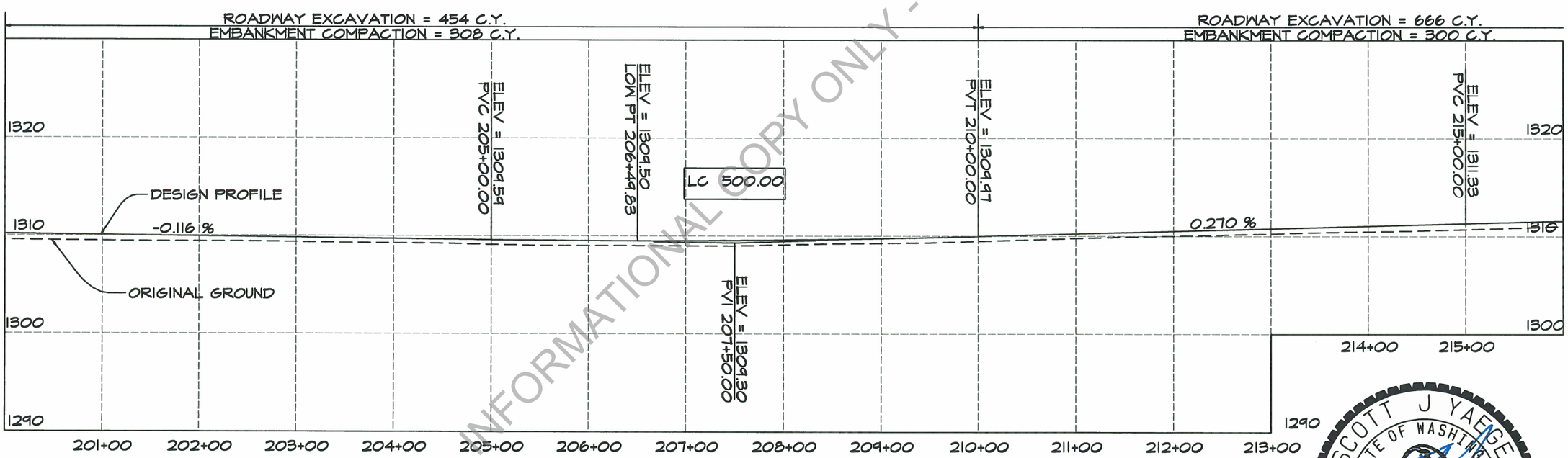

INFORMATIONAL COPY ONLY - NOT FOR BIDDING

GRANT COUNTY PUBLIC WORKS DEPARTMENT
124 ENTERPRISE ST. SE
EPHRATA, WASHINGTON 98823
(509) 754-6082 FAX (509) 754-6087

STRATFORD ROAD
RECONSTRUCTION

CRP 17-06

DESIGNED BY:	BOB BERSANTI
CHECKED BY:	SCOTT YAEGER
APPROVED BY:	SCOTT YAEGER
REVISIONS BY:	
DATE REVISED:	4/16/2020
FEDERAL AID NO.:	

SCOTT J YAEGER
STATE OF WASHINGTON
41439
REGISTERED
PROFESSIONAL ENGINEER

DATE: 4-21-2020

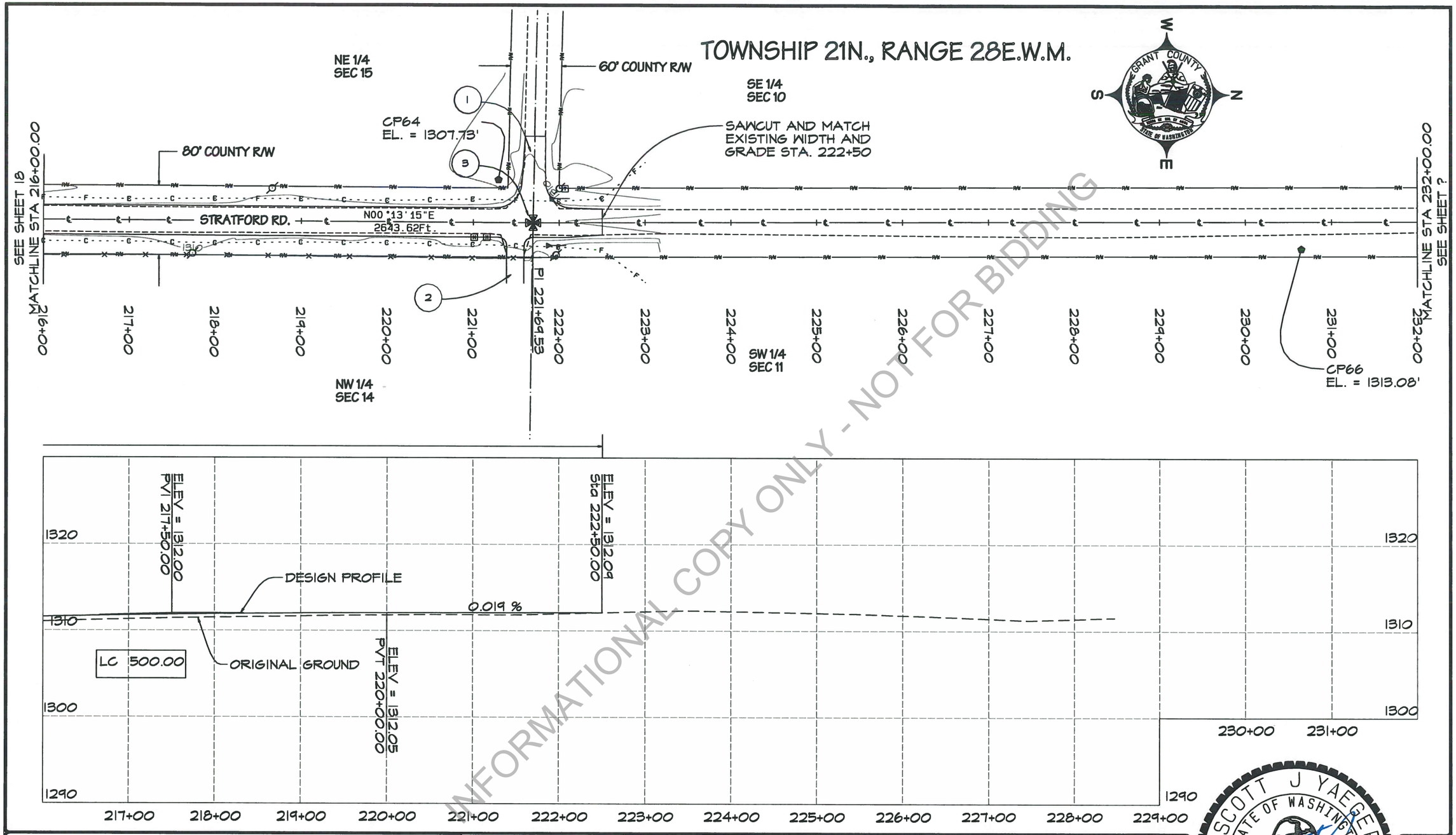

INFORMATIONAL COPY ONLY - NOT FOR BIDDING

GRANT COUNTY PUBLIC WORKS DEPARTMENT
124 ENTERPRISE ST. SE
EPHRATA, WASHINGTON 98823
(509) 754-6082 FAX (509) 754-6087

STRATFORD ROAD RECONSTRUCTION

CRP 17-06

DESIGNED BY:	BOB BERSANTI
CHECKED BY:	SCOTT YAEGER
APPROVED BY:	SCOTT YAEGER
REVISIONS BY:	
DATE REVISED:	4/16/2020
FEDERAL AID NO.:	

SCOTT J YAEGER
STATE OF WASHINGTON
41439
REGISTERED
PROFESSIONAL ENGINEER

DATE: 4-21-2020

TYPICAL ROADWAY SECTION "A"

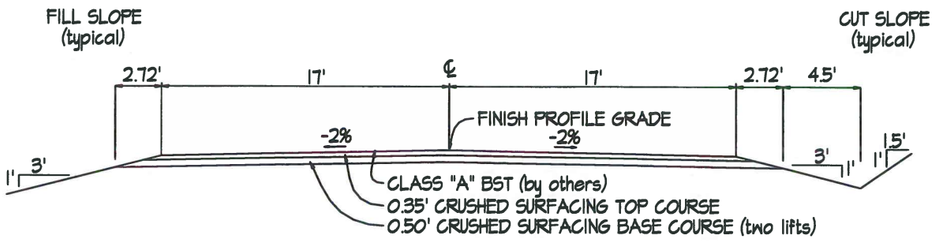

STA. 9+50 TO STA. 104+00
TRANSITION ROADWAY SECTION "A" STA 104+00 TO ROADWAY SECTION "D" STA. 105+00
STA 108+00 TO STA.143+50
TRANSITION ROADWAY SECTION "A" STA 143+50 TO ROADWAY SECTION "B" STA. 144+00
STA. 152+00 TO STA. 222+50

ROADWAY SECTION "B"

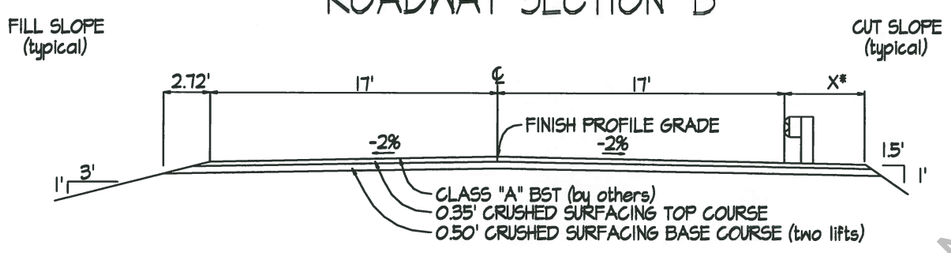

STATION	X
144+00	6'
144+10	6'
144+60	4'
147+00	4'

TRANSITION ROADWAY SECTION "B" STA 147+00 TO ROADWAY SECTION "C" STA. 147+50

ROADWAY SECTION "C"

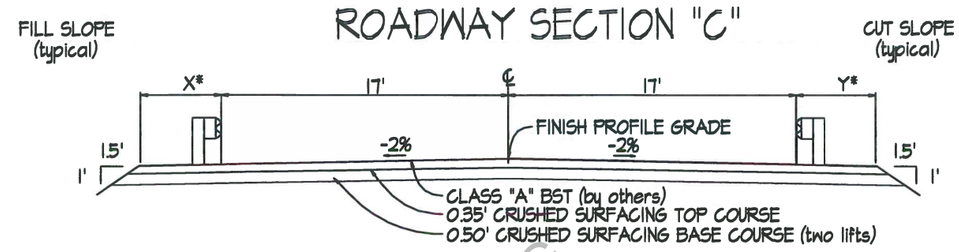

STATION	X	Y
147+50	6'	4'
147+60	6'	4'
148+10	4'	4'
151+40	4'	4'
151+90	6'	6'
152+00	6'	6'

TRANSITION ROADWAY SECTION "C" STA 152+00 TO ROADWAY SECTION "A" STA. 152+50

TYPICAL ROADWAY SECTION "D"

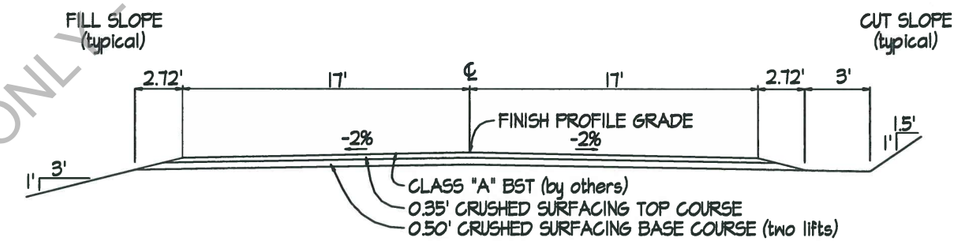

STA. 105+00 TO STA. 107+00
TRANSITION ROADWAY SECTION "D" STA 107+00 TO ROADWAY SECTION "A" STA. 108+00

TYPICAL APPROACH

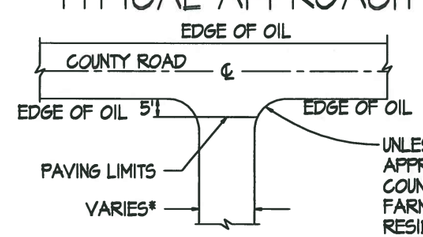

UNLESS OTHERWISE NOTED ON THE PLANS
APPROACH RADII WILL BE AS FOLLOWS:
COUNTY ROAD 30' RADIUS
FARM APPROACH 15' RADIUS
RESIDENTIAL APPROACH 10' RADIUS
COMMERCIAL APPROACH 20' RADIUS
" SEE STRUCTURE NOTES FOR LOCATIONS"

INFORMATIONAL COPY ONLY - NOT FOR BIDDING

GRANT COUNTY PUBLIC WORKS DEPARTMENT
124 ENTERPRISE ST. SE
EPHRATA, WASHINGTON 98823
(509) 754-6082 FAX (509) 754-6087

STRATFORD ROAD RECONSTRUCTION

CRP 17-06

DESIGNED BY:	BOB BERSANTI
CHECKED BY:	SCOTT YAEGER
APPROVED BY:	SCOTT YAEGER
REVISIONS BY:	
DATE REVISED:	4/16/2020
FEDERAL AID NO.:	

SCOTT J YAEGER
STATE OF WASHINGTON
41439
REGISTERED
PROFESSIONAL ENGINEER

DATE: 4-21-2020

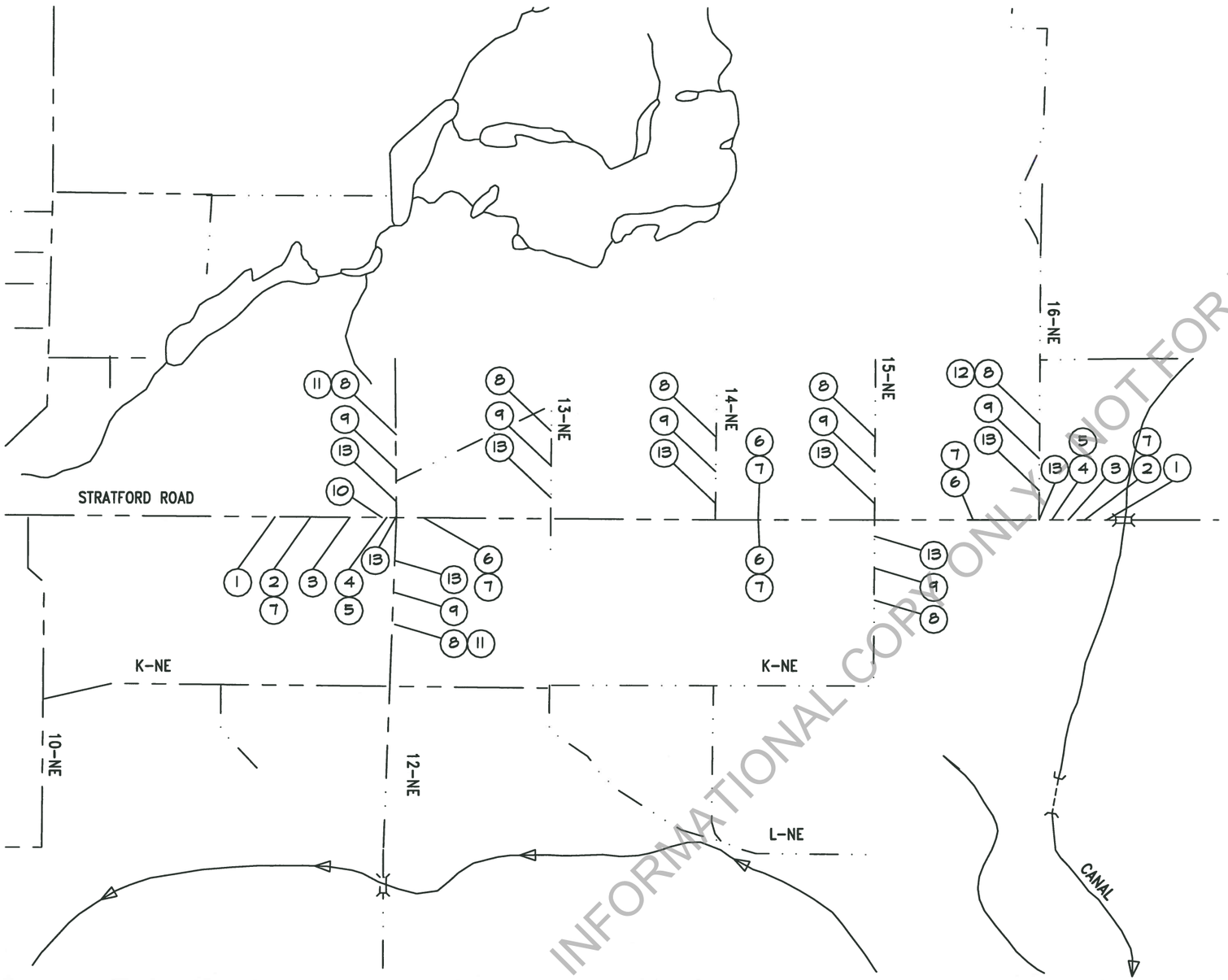

NO.	MUTCD NO.	QTY.	DESCRIPTION	SIXE	COLOR
1	W20-1	2	ROAD WORK AHEAD	48X48	BXO
2	W8-3	2	PAVEMENT ENDS	48X48	BXO
3	W21-1701	2	M C USE EXTREME CAUTION	48X48	BXO
4	G20-1	2	ROAD WORK NEXT 4 MILES	60X24	BXO
5	PLAQUE	2	EXPECT DELAYS	30X24	BXO
6	W8-8	4	ROUGH RD	36X36	BXO
7	W13-1	6	15 MPH	24X24	BXO
8	W20-1	7	ROAD WORK AHEAD	36X36	BXO
9	W21-1701	7	M C USE EXTREME CAUTION	36X36	BXO
10	G20-2A	2	END ROAD WORK	48X24	BXO
11	PLAQUE	2	NORTHBOUND	48X18	BXO
12	PLAQUE	1	SOUTHBOUND	48X18	BXO
13	W8-1	9	BUMP	36X36	BXO

INFORMATIONAL COPY ONLY NOT FOR BIDDING

GRANT COUNTY PUBLIC WORKS DEPARTMENT
124 ENTERPRISE ST. SE
EPHRATA, WASHINGTON 98823
(509) 754-6082 FAX (509) 754-6087

STRATFORD ROAD RECONSTRUCTION

CRP 17-06

DESIGNED BY:	BOB BERSANTI
CHECKED BY:	SCOTT YAEGER
APPROVED BY:	SCOTT YAEGER
REVISIONS BY:	
DATE REVISED:	4/16/2020
FEDERAL AID NO.:	

SCOTT J YAEGER
STATE OF WASHINGTON
41439
REGISTERED
PROFESSIONAL ENGINEER

DATE: 4-21-2020

SHEET 21 OF 21

DRAWN BY: FERN LIDDELL

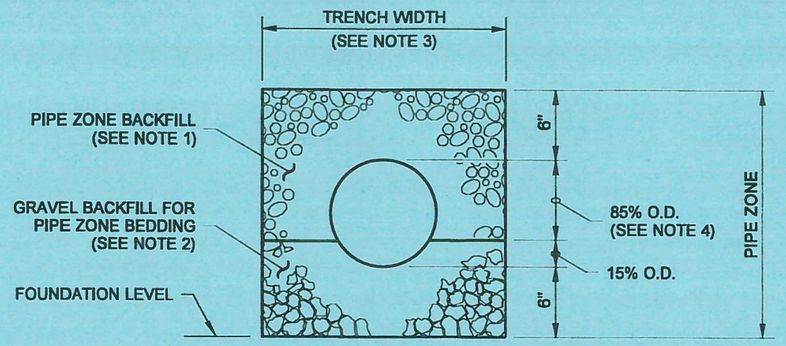

CONCRETE AND DUCTILE IRON PIPE

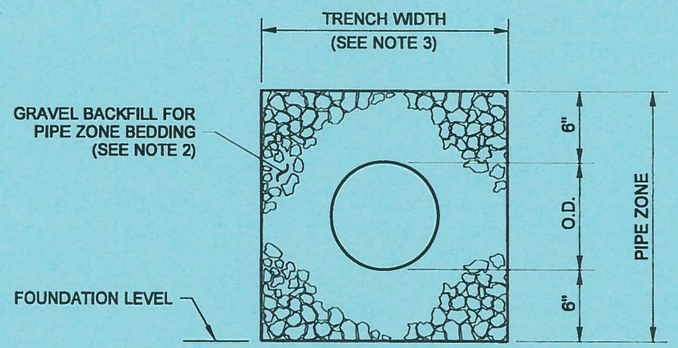

THERMOPLASTIC PIPE

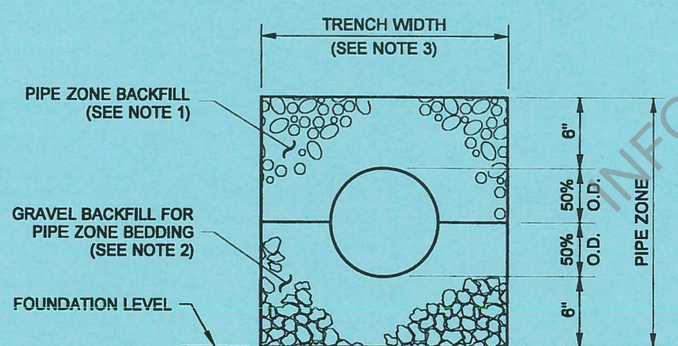

METAL AND STEEL RIB REINFORCED POLYETHYLENE PIPE

NOTES

1. See **Standard Specifications Section 7-08.3(3)** for Pipe Zone Backfill.
2. See **Standard Specifications Section 9-03.12(3)** for Gravel Backfill for Pipe Zone Bedding.
3. See **Standard Specifications Section 2-09.4** for Measurement of Trench Width.
4. For sanitary sewer installation, concrete pipe shall be bedded to spring line.

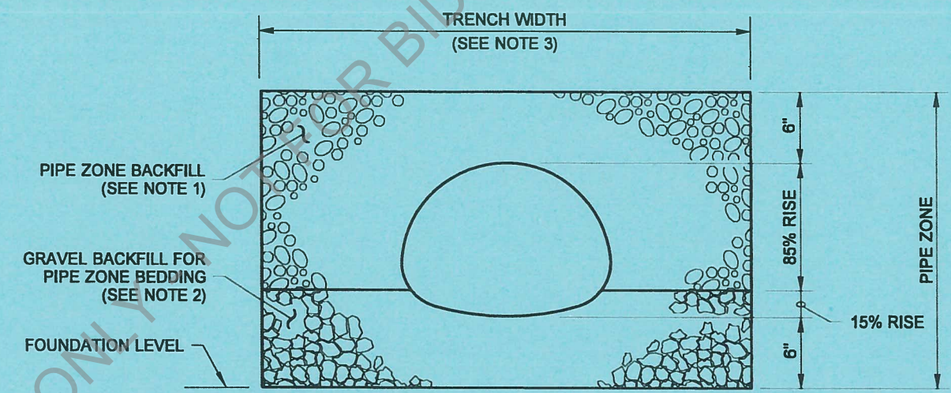

PIPE ARCHES

CLEARANCE BETWEEN PIPES FOR MULTIPLE INSTALLATIONS		
PIPE	SIZE	MINIMUM DISTANCE BETWEEN BARRELS
CIRCULAR PIPE (DIAMETER)	UP TO 48"	24"
METAL PIPE ARCH (SPAN)	48" AND LARGER	DIAMETER/2 OR 36" WHICHEVER IS LESS

INFORMATIONAL COPY ONLY NOT FOR BIDDING

JULIE HEILMAN
STATE OF WASHINGTON
41819
REGISTERED
PROFESSIONAL ENGINEER

Heilman, Julie
Feb 20 2018 12:56 PM
cosign

PIPE ZONE BEDDING AND BACKFILL

STANDARD PLAN B-55.20-02

SHEET 1 OF 1 SHEET

APPROVED FOR PUBLICATION
Carpenter, Jeff
Feb 27 2018 8:01 AM
cosign

STATE DESIGN ENGINEER
Washington State Department of Transportation

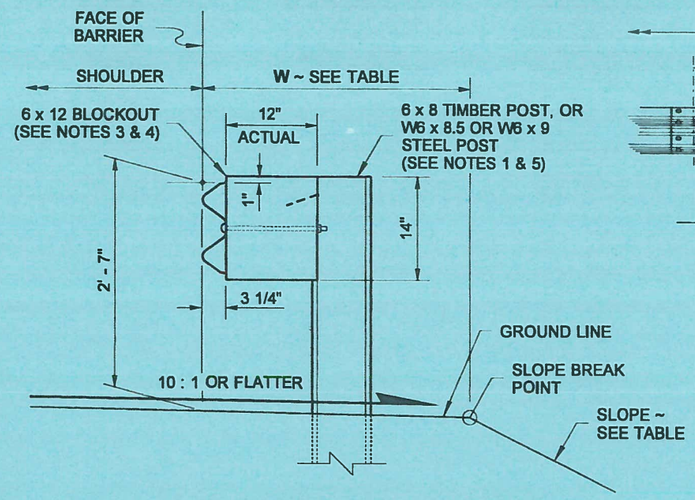

TYPICAL SECTION ~ WITHOUT CURB
(6' - 0" POSTS)

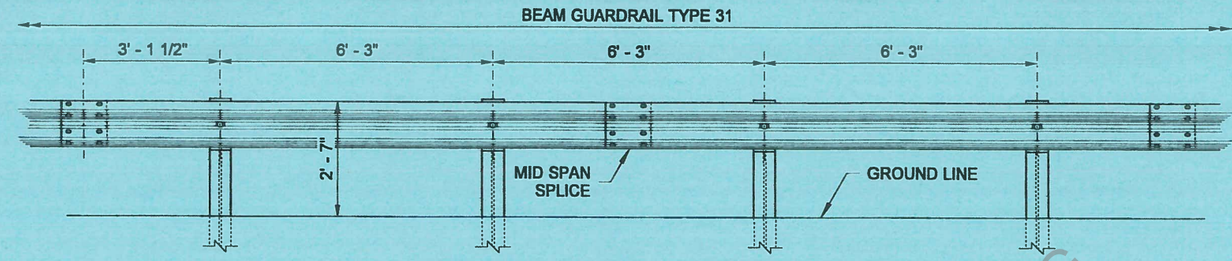

TYPICAL ELEVATION

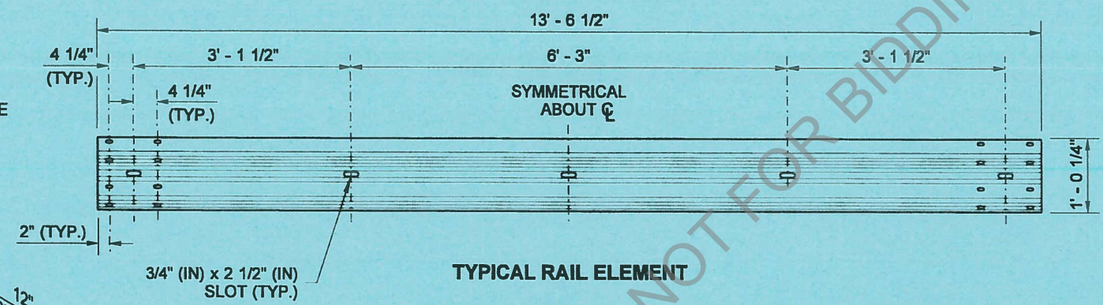

TYPICAL RAIL ELEMENT

NOTES

1. Refer to **Standard Plan C-1b** and **C-20.11** for additional details not shown on this plan.
2. Extend shoulder pavement to provide a base for the extruded curb. See Contract Plans for exceptions to distances shown.
3. Use a single block or combination of blocks (no more than two (2) to achieve the actual 12" (in) offset. See **Standard Specification, Section 9-16.3(2)**. Wood blocks shall be secured to the posts with anti-rotation nails. If combination blocks are used, the adjacent blocks shall be toenailed with two 16d galvanized nails to prevent block rotation.
4. Wood blocks are shown. Blocks of an approved alternative material may be used. See **Standard Specification, Section 9-16.3(2).**
5. All posts for any standard barrier run shall be of the same type: timber or steel.
6. Attach blockouts to steel posts using bolt holes on approaching traffic side of post web.

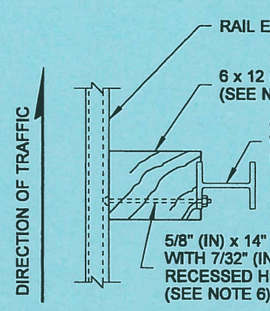

PLAN VIEW

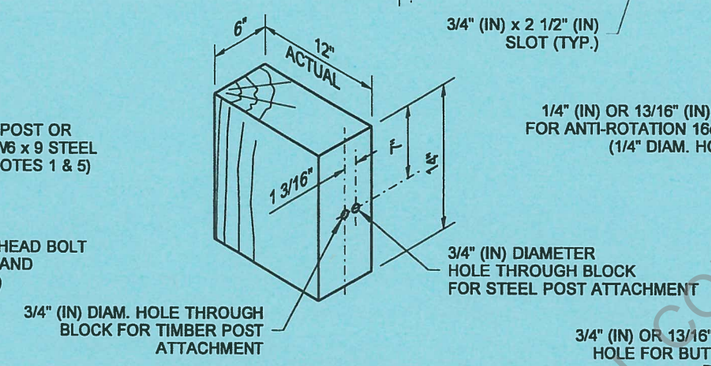

WOOD BLOCK

STEEL POST

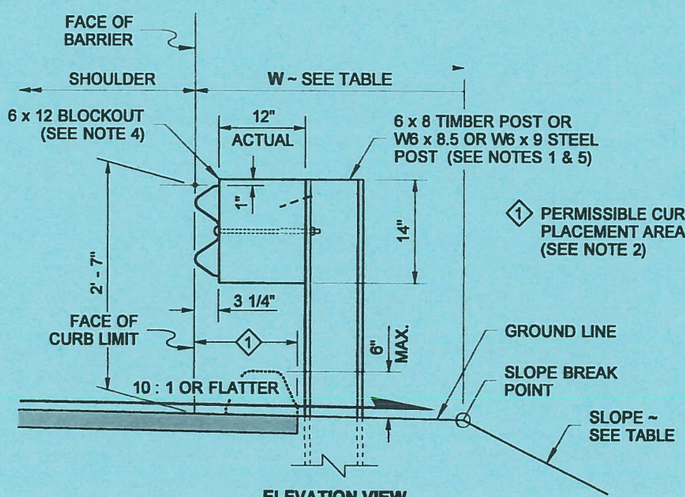

ELEVATION VIEW

TYPICAL SECTION ~ WITH CURB
(6' - 0" LONG POSTS)

① PERMISSIBLE CURB PLACEMENT AREA (SEE NOTE 2)

SLOPE \ EMBANKMENT TABLE
FOR STD. 6' POSTS

SLOPE	W (FT)
2H : 1V OR FLATTER	2.5' MIN.
STEEPER THAN 2H : 1V BUT NOT STEEPER THAN 1H : 1V	4.0' MIN.

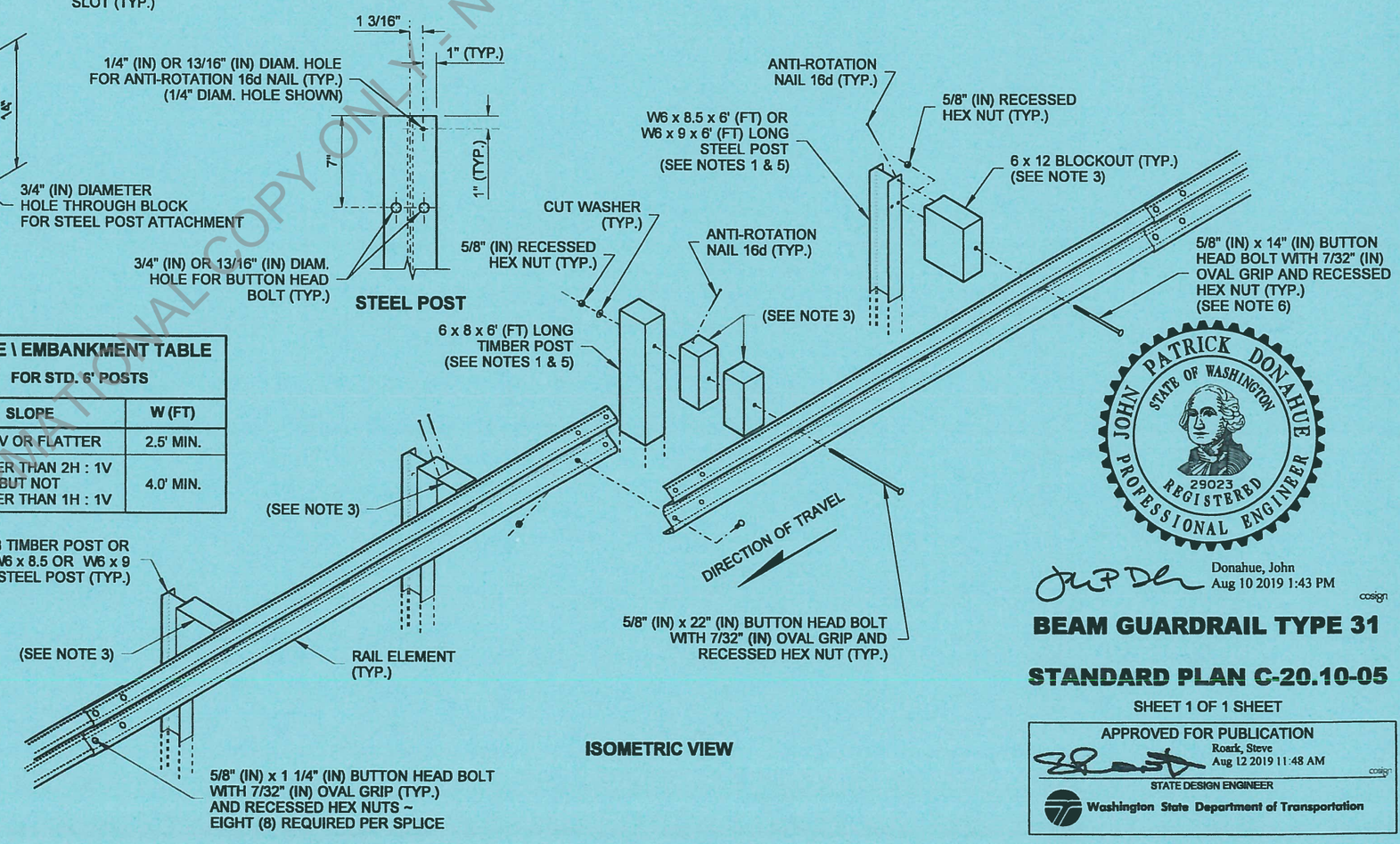

ISOMETRIC VIEW

INFORMATIONAL COPY ONLY - NOT FOR BIDDING

Donahue, John
Aug 10 2019 1:43 PM
cosign

BEAM GUARDRAIL TYPE 31

STANDARD PLAN C-20.10-05

SHEET 1 OF 1 SHEET

APPROVED FOR PUBLICATION
Roark, Steve
Aug 12 2019 11:48 AM
cosign
STATE DESIGN ENGINEER
Washington State Department of Transportation

DRAWN BY: FERN LIDDELL

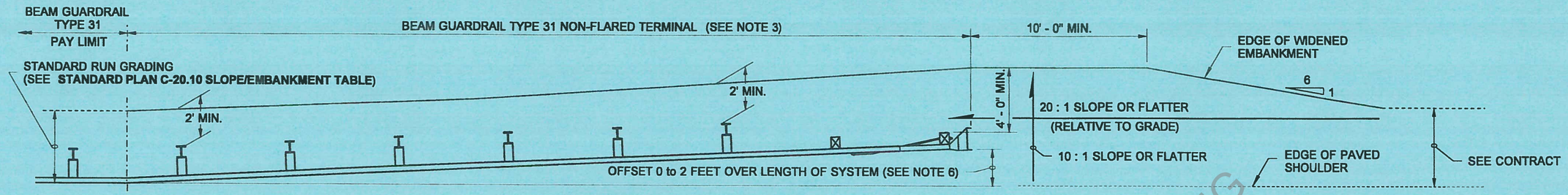

PLAN VIEW

MSKT-SP-MGS (TL-3) SHOWN

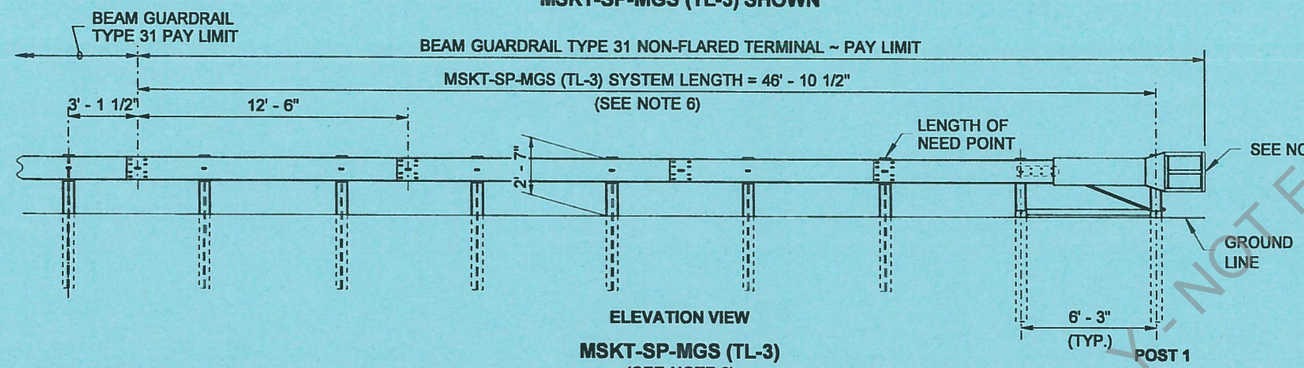

ELEVATION VIEW

MSKT-SP-MGS (TL-3)
(SEE NOTE 8)

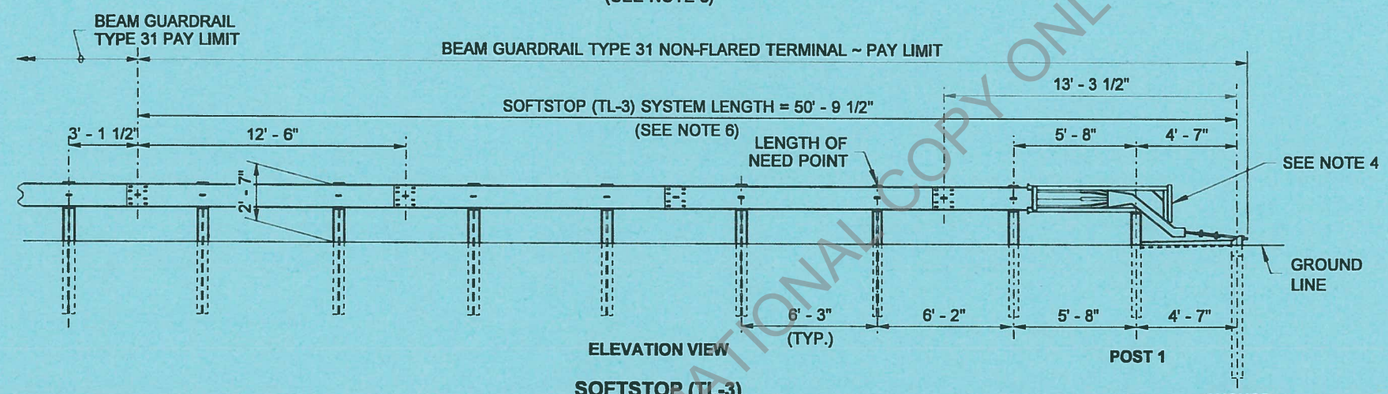

ELEVATION VIEW

SOFTSTOP (TL-3)
(SEE NOTE 8)

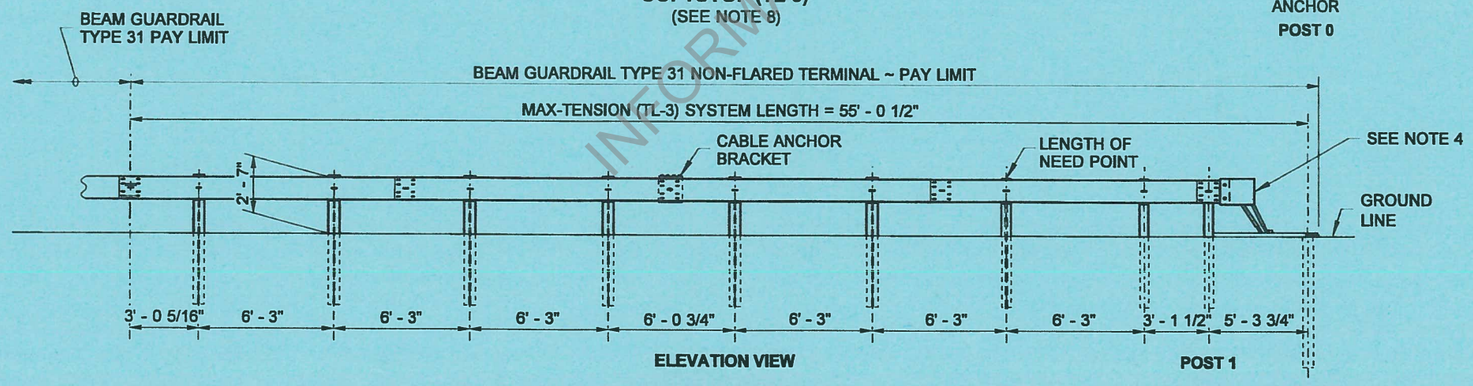

ELEVATION VIEW

MAX-TENSION (TL-3)
(SEE NOTE 8)

NOTES

1. The Implementation of the Manual for Assessment of Safety Hardware (MASH) criteria may result in the acceptance of guardrail terminal systems currently not shown on this plan. Non-Flared terminals shall be selected from the WSDOT Qualified Products List (QPL) or approved through the WSDOT Request for Approval of Materials (RAM) process.
2. This terminal is MASH compliant at Test Level Three (TL-3) and may be used for all posted speeds.
3. An MSKT-SP-MGS (TL-3) as manufactured by Road Systems, Inc, SOFTSTOP (TL-3) as manufactured by Trinity Highway Products, LLC, or MAX-TENSION (TL-3) as manufactured by Lindsay Transportation Solutions, shall be installed according to manufacturer's recommendations.
4. A reflectorized object marker shall be installed according to manufacturer's recommendations.
5. Snow load rail washers shall not be installed within the terminal limits.
6. Provide an offset between 0 to 2 feet so that the impact head does not encroach onto the paved shoulder. The offset is provided over the length of the terminal system from the center of the last post splice to either:
   (1) The face of the impact head at its leading edge (MSKT-SP-MGS), or
   (2) The center of Anchor **Post 0** (Softstop or Max-Tension). Provide maximum offset where practicable.
7. For terminal details, see WSDOT approved manufacturer's drawings.
8. These terminals are supplied with steel posts only. They can be used with beam guardrail Type 31 runs composed of steel or wood guardrail posts.

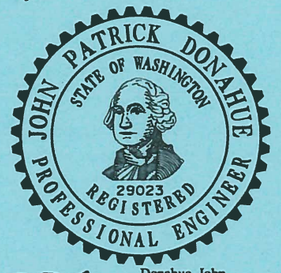

Donahue, John
Aug 10 2019 2:02 PM

BEAM GUARDRAIL TYPE 31 NON-FLARED TERMINAL (ALL POSTED SPEEDS) STANDARD PLAN C-22.40-07

SHEET 1 OF 1 SHEET

APPROVED FOR PUBLICATION
Roark, Steve
Aug 12 2019 11:52 AM
STATE DESIGN ENGINEER
Washington State Department of Transportation

DRAWN BY: FERN LIDDELL

INFORMATIONAL COPY ONLY - NOT FOR BIDDING

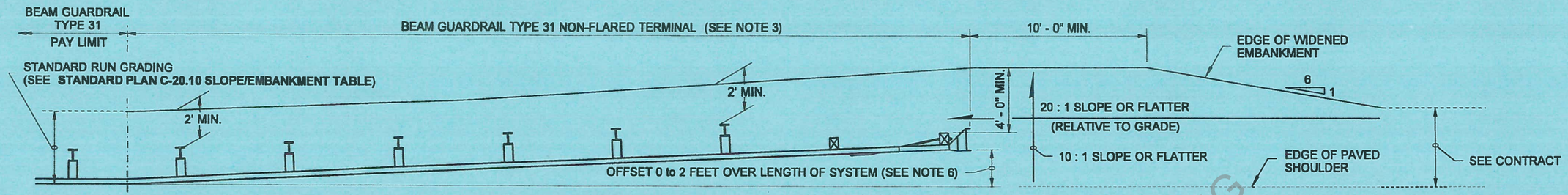

PLAN VIEW

MSKT-SP-MGS (TL-3) SHOWN

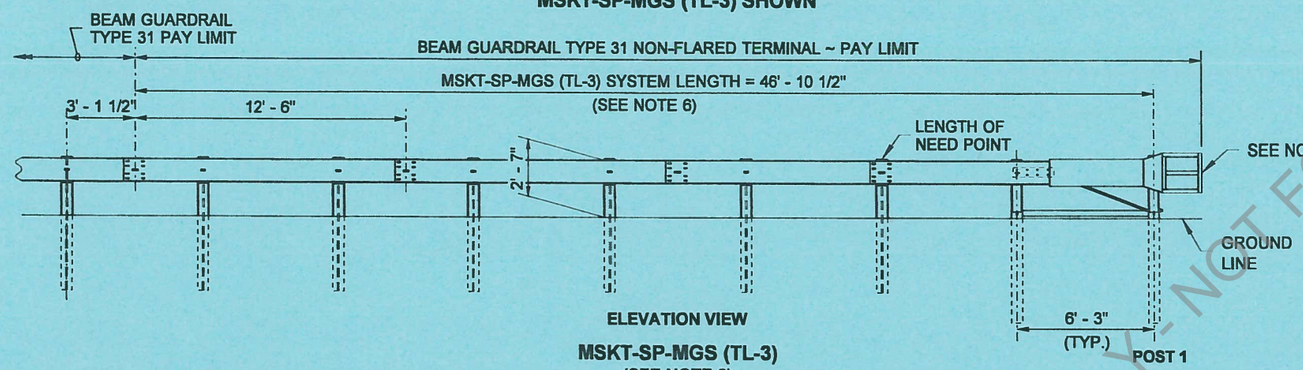

ELEVATION VIEW

MSKT-SP-MGS (TL-3)
(SEE NOTE 8)

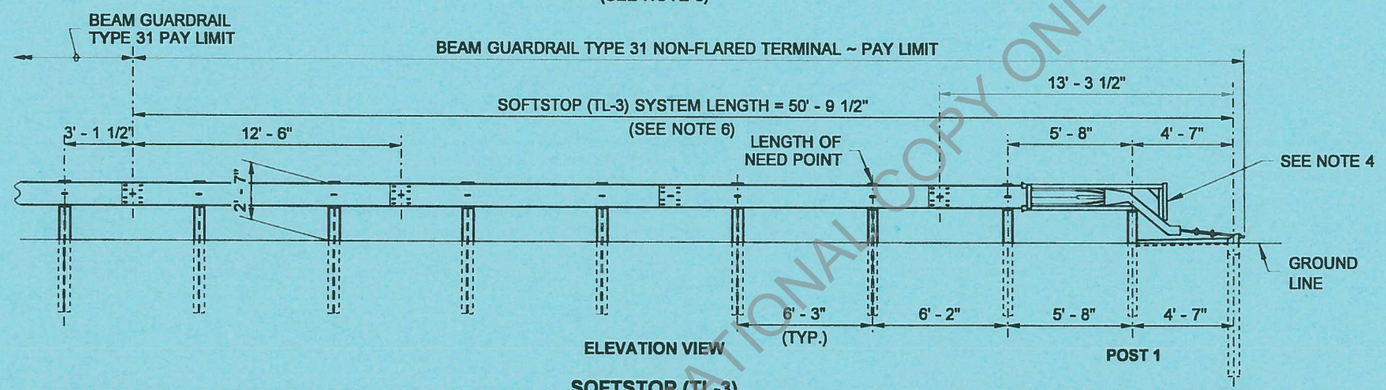

ELEVATION VIEW

SOFTSTOP (TL-3)
(SEE NOTE 8)

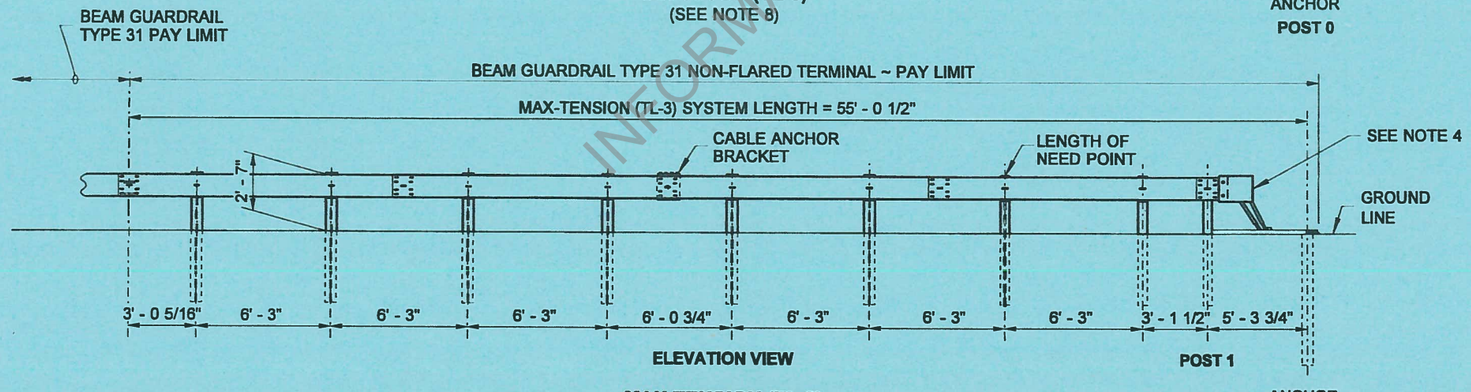

ELEVATION VIEW

MAX-TENSION (TL-3)
(SEE NOTE 8)

NOTES

1. The Implementation of the Manual for Assessment of Safety Hardware (MASH) criteria may result in the acceptance of guardrail terminal systems currently not shown on this plan. Non-Flared terminals shall be selected from the WSDOT Qualified Products List (QPL) or approved through the WSDOT Request for Approval of Materials (RAM) process.
2. This terminal is MASH compliant at Test Level Three (TL-3) and may be used for all posted speeds.
3. An MSKT-SP-MGS (TL-3) as manufactured by Road Systems, Inc, SOFTSTOP (TL-3) as manufactured by Trinity Highway Products, LLC, or MAX-TENSION (TL-3) as manufactured by Lindsay Transportation Solutions, shall be installed according to manufacturer's recommendations.
4. A reflectorized object marker shall be installed according to manufacturer's recommendations.
5. Snow load rail washers shall not be installed within the terminal limits.
6. Provide an offset between 0 to 2 feet so that the impact head does not encroach onto the paved shoulder. The offset is provided over the length of the terminal system from the center of the last post splice to either: (1) The face of the impact head at its leading edge (MSKT-SP-MGS), or (2) The center of Anchor **Post 0** (Softstop or Max-Tension). Provide maximum offset where practicable.
7. For terminal details, see WSDOT approved manufacturer's drawings.
8. These terminals are supplied with steel posts only. They can be used with beam guardrail Type 31 runs composed of steel or wood guardrail posts.

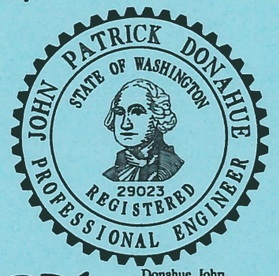

Donahue, John
Aug 10 2019 2:02 PM

BEAM GUARDRAIL TYPE 31 NON-FLARED TERMINAL (ALL POSTED SPEEDS) STANDARD PLAN C-22.40-07

SHEET 1 OF 1 SHEET

APPROVED FOR PUBLICATION
Roark, Steve
Aug 12 2019 11:52 AM
STATE DESIGN ENGINEER
Washington State Department of Transportation

DRAWN BY: FERN LIDDELL

INFORMATIONAL COPY ONLY - NOT FOR BIDDING

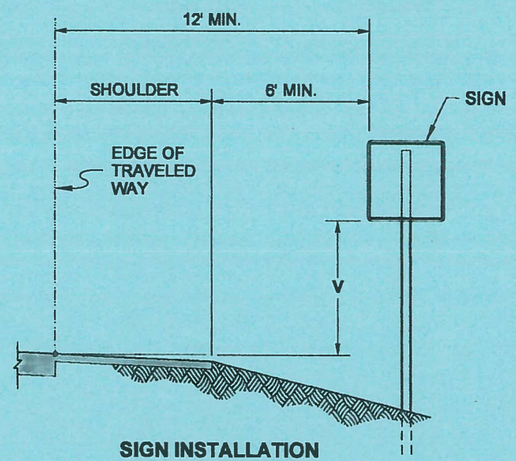

SIGN INSTALLATION (FILL SECTION)

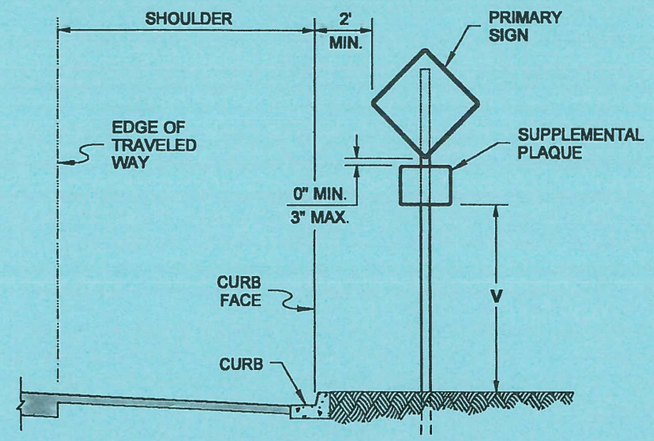

SIGN INSTALLATION (CURB SECTION)

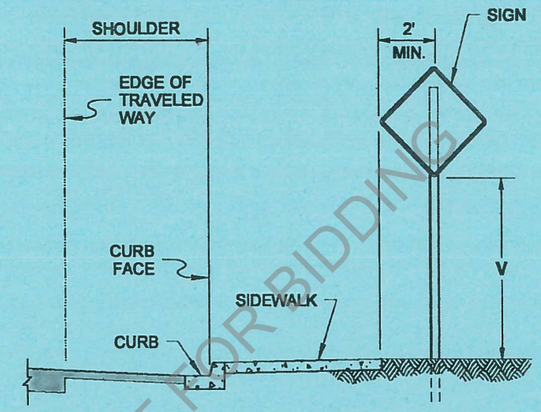

SIGN INSTALLATION (SIDEWALK AND CURB SECTION)

NOTES

1. For sign installation details, see **Standard Plan G - series.**
2. Where it is impractical to locate a sign with the lateral offset, a minimum of 2'(ft) offset may be used. A 1'(ft) lateral offset may be used in business, commercial or residential areas.
3. The "V" height for signs, with an area of more than 50 square feet and two or more sign supports, is 7 feet in both rural and urban areas.

HEIGHT V		
	TO BOTTOM OF SIGN (NO SUPPLEMENTAL PLAQUE)	TO BOTTOM OF SUPPLEMENTAL PLAQUE (WHEN REQUIRED)
RURAL	5' MINIMUM	4' MINIMUM
URBAN	7' MINIMUM	6' MINIMUM

DRAWN BY: FERN LIDDELL

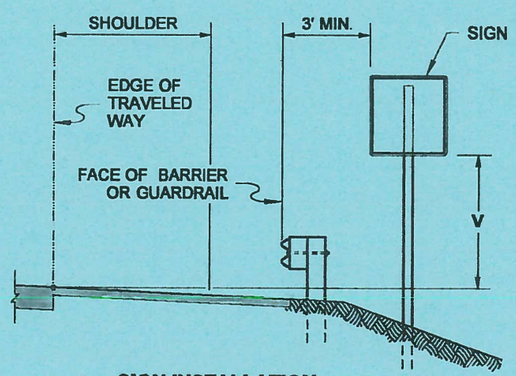

SIGN INSTALLATION (BEHIND TRAFFIC BARRIER)

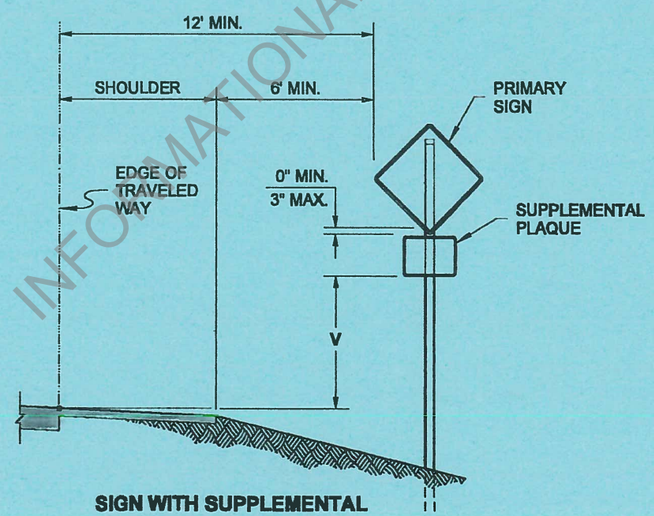

SIGN WITH SUPPLEMENTAL PLAQUE INSTALLATION (FILL SECTION)

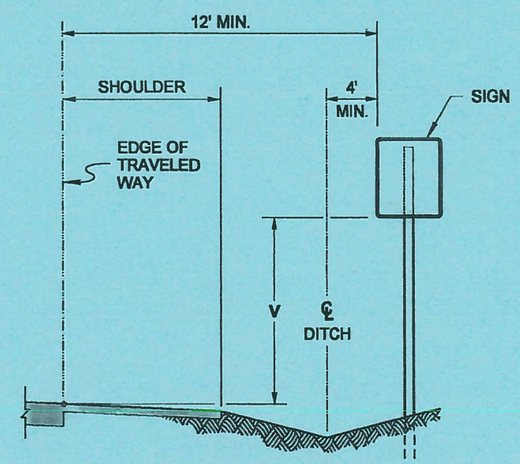

SIGN INSTALLATION (DITCH SECTION)

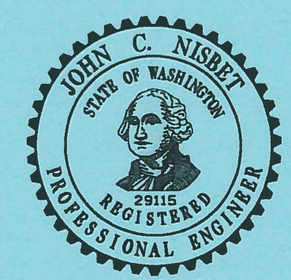

Nisbet, John
Nisbet, John
May 16 2016 9:57 AM

CLASS A CONSTRUCTION SIGNING INSTALLATION

STANDARD PLAN K-80.10-01

SHEET 1 OF 1 SHEET

APPROVED FOR PUBLICATION
Carpenter, Jeff
Jun 1 2016 4:20 PM
STATE DESIGN ENGINEER
Washington State Department of Transportation

INFORMATIONAL COPY ONLY - NOT FOR BIDDING