Ephrata New Landfill
Phase 3 Development

Prepared for
Grant County Public Works Department

April 2020

Prepared by
Parametrix

INFORMATIONAL COPY ONLY - NOT FOR BIDDING PURPOSES

Contract Documents and Specifications

Grant County

EPHRATA LANDFILL
PHASE 3 DEVELOPMENT

Prepared for

Grant County
Public Works Department
124 Enterprise St. S.E.
Ephrata, Washington 98823

Prepared by

Parametrix
719 2nd Avenue, Suite 200
Seattle, Washington 98104
(206) 394-3700
www.parametrix.com

April 2020
Project No. 555-3746-001 (05.01)

INFORMATIONAL COPY ONLY - NOT FOR BIDDING PURPOSES

CERTIFICATE OF ENGINEER

The technical material and data contained in this document were prepared under the supervision and direction of the undersigned, whose seal, as a professional engineer licensed to practice as such, is affixed below.

STEPHEN M. EMGE
STATE OF WASHINGTON
34389
REGISTERED
PROFESSIONAL ENGINEER

4/28/20

Prepared and Approved by Stephen M. Emge, P.E.
Project Engineer

INFORMATIONAL COPY ONLY - NOT FOR BIDDING PURPOSES

TABLE OF CONTENTS

LEGAL DOCUMENTS

NOTICE TO CONTRACTORS LD-1
BIDDER'S CHECKLIST LD-2
PROPOSAL LD-3
SCHEDULE OF PRICES LD-5
ADDENDA RECEIVED LD-9
STATEMENT OF INTENDED SURETY LD-12
BID BOND LD-13
NON-COLLUSION AFFIDAVIT LD-14
CONTRACT LD-15
CONTRACT BOND LD-17
INSTRUCTIONS TO BIDDERS LD-18

STANDARD SPECIFICATIONS

STANDARD SPECIFICATIONS SS-1

GENERAL PROVISIONS AMENDMENTS

GENERAL STIPULATIONS GP-1

SPECIAL PROVISIONS

DIVISION 1 – GENERAL REQUIREMENTS SP-1
DIVISION 2 – EARTHWORK SP-23
DIVISION 7 – DRAINAGE STRUCTURES, STORM SEWERS, SANITARY SEWERS, WATER MAINS, AND CONDUITS SP-31
DIVISION 8 – MISCELLANEOUS CONSTRUCTION SP-61
DIVISION 9 – MATERIALS SP-75

APPENDICES

A CQA PLAN
B PREVAILING WAGE RATES
C HALF-SIZED ENGINEERING PLANS

INFORMATIONAL COPY ONLY - NOT FOR BIDDING PURPOSES

LEGAL DOCUMENTS

INFORMATIONAL COPY ONLY - NOT FOR BIDDING PURPOSES

NOTICE TO CONTRACTORS

NOTICE IS HEREBY GIVEN, that sealed bids will be received either by mail or hand delivered by Grant County at the Office of the Board of County Commissioners, located in the County Courthouse, P.O. Box 37, 35 C Street NW – Room 207, Ephrata, Washington, 98823, until **1:30 p.m., Tuesday, July 28th, 2020** and will then and there be opened and publicly read for the construction of the improvements. The name and address of the bidder shall be on the outside of the envelope.

All bid proposals shall be accompanied by bid proposal deposit in cash, a certified check, cashier's check, or surety bond payable to Grant County, in an amount equal to five percent (5%) of the amount of such bid proposal. No conditional bid bond will be accepted. Should the successful bidder fail to enter into such contract and furnish a satisfactory performance bond within the time stated in the specifications, the bid proposal deposit shall be forfeited to Grant County.

Plans and Specifications may be purchased from the office of the County Engineer, 124 Enterprise St. S.E., Ephrata, Washington 98823, Phone: (509) 754-6082. The contact person is Samuel Castro, C.P.O. The plans and specifications are provided for a non-refundable deposit of $30.00 for each set, plus a $5.00 postage and handling fee, if mailing is requested.

Informational copies of the Plans and Specifications are on file for inspection purposes at the Grant County Public Works Building, 124 Enterprise St. S.E., Ephrata, Washington 98823, and only in the Chapter Offices of the AGC in Seattle and Spokane, and other various Plan Centers located in Washington, as requested.

The Board of County Commissioners of Grant County, Washington, reserves the right to reject any and all bids. The award of the contract, if made, shall be made to the qualified responsive bidder submitting the lowest responsible bid.

This work may generally be described as construction of the bottom lining system for the Ephrata Landfill Phase 3 Development area (approximately 18 acres). The work to be performed under this contract shall be the following: grading; installation of a landfill gas collection and condensate system piping, placement of a bedding layer, installation of a 60-mil textured HDPE geomembrane liner; installation of a geotextile cushion layer; placement of a sideslope layer, and leachate collection layer. Also, the work will include the excavation/embankment and grading of access roads, stormwater perimeter ditch, and electrical for the condensate system. See the Proposal on page LD-3 for construction period for this project.

No bidders may withdraw his/her bid after the hour set for the opening thereof or before award of contract unless said award is delayed for a period exceeding sixty (60) days from the date of bid opening.

INFORMATIONAL COPY ONLY - NOT FOR BIDDING PURPOSES

BIDDER'S CHECKLIST

This checklist has been prepared and furnished to aid Bidders in including all necessary supporting information with their bid. Bidders' submittals should include, but are not limited to, the following:

Item	List
1.	Proposal (Bid)
2.	Certification of Authority of Signature
3.	Bid Bond (cash, certified check, cashier's check, or surety bond)
4.	Power-of-Attorney for Surety's Agent, if bid deposit is a surety bond
5.	Statement of Intended Surety, if bid deposit is not a surety bond
6.	Non-Collusion Affidavit
7.	Statement of Proposed Subcontractors

INFORMATIONAL COPY ONLY - NOT FOR BIDDING PURPOSES

PROPOSAL

Ephrata Landfill Phase 3 Development
Grant County
Public Works Department
124 Enterprise St. S.E.
Ephrata, Washington 98823

Bid Proposal of _____ (hereinafter called "BIDDER"), organized and existing under the laws of the State of _____ doing business as _____[1] to Grant County (hereinafter called "OWNER").

In compliance with your Advertisements for Bids, BIDDER hereby proposes to perform all work for the construction of **Ephrata Landfill Phase 3 Development**, in strict accordance with the CONTRACT DOCUMENTS, within the time set forth therein, and at the prices stated below.

By submission of this BID PROPOSAL, each BIDDER certifies, and in the case of a joint BID PROPOSAL each party thereto certifies as to his own organization, that this BID PROPOSAL has been arrived at independently, without consultation, communication, or agreement as to any matter relating to this BID PROPOSAL with any other BIDDER or with any competitor.

BIDDER hereby agrees to commence WORK under this contract on or before a date to be specified in the NOTICE TO PROCEED and to fully complete PROJECT within 95 working days thereafter, BIDDER further agrees to pay as liquidated damages for each consecutive calendar day thereafter in accordance with Section 1-08.9 of the Standard Specifications and as amended.

This certifies that the BIDDER has examined the project site and the plans, specifications, and Contract Documents governing the work embraced in this project and the method by which payment will be made of said work is understood.

INFORMATIONAL COPY ONLY NOT FOR BIDDING PURPOSES

[1] Insert "a corporation," "a partnership," or "an individual" as applicable.

CERTIFICATION OF AUTHORITY OF SIGNATURE

I, _____, certify that I am the Secretary of the Corporation named as Bidder herein, that _____ who signed this bid on behalf of the Corporation was then _____ of said Corporation, that said bid was duly signed for and on behalf of said Corporation by the authority of its governing body and is within the scope of its corporate powers.

_____ _____

Signature Date

_____

Name of Secretary of the Corporation
(please type)

Corporate Seal

INFORMATIONAL COPY ONLY - NOT FOR BIDDING PURPOSES

SCHEDULE OF PRICES
EPHRATA LANDFILL PHASE 3 DEVELOPMENT

ITEM NO.	ESTIMATED QUANTITY	DESCRIPTION OF ITEM	UNIT PRICE	AMOUNT
1.	LS	Mobilization (1-09.7) $_____ (Words) Per Lump Sum	L.S.	$_____
2.	LS	Health and Safety Plan (1-07.28) $_____ (Words) Per Lump Sum	L.S.	$_____
3.	LS	Surveying (1-05.5) $_____ (Words) Per Lump Sum	L.S.	$_____
4.	31,669 CY	Excavation and Haul (2-03) $_____ (Words) Per Cubic Yard	$_____	$_____
5.	4,032 CY	Embankment Compaction (2-03) $_____ (Words) Per Cubic Yard	$_____	$_____
6.	6,352 CY	GCL Bedding Layer from Stockpile (2-03) $_____ (Words) Per Cubic Yard	$_____	$_____
7.	38,114 SY	Geosynthetic Clay Liner (GCL) (8-05) $_____ (Words) Per Square Yard	$_____	$_____
8.	38,114 SY	60-mil Textured HDPE Geomembrane (8-05) $_____ (Words) Per Square Yard	$_____	$_____

INFORMATIONAL COPY ONLY - NOT FOR BIDDING PURPOSES

ITEM NO.	ESTIMATED QUANTITY	DESCRIPTION OF ITEM	UNIT PRICE	AMOUNT
9.	31,768 SY	Geotextile Cushion Layer (8-05) $_____ (Words) Per Square Yard	$_____	$_____
10.	19,057 CY	Leachate Collection Layer (2-03) $_____ (Words) Per Cubic Yard	$_____	$_____
11.	703 SY	Rock Armor Layer from Stockpile (2-03) $_____ (Words) Per Square Yard	$_____	$_____
12.	1,934 SY	Crushed Surfacing Top Course – In-Place (4-04) $_____ (Words) Per Square Yard	$_____	$_____
13.	2,457 LF	Interim Stormwater Geomembrane Berms/North Containment Geomembrane (8-05) $_____ (Words) Per Linear Feet	$_____	$_____
14.	334 LF	6-Inch HDPE Solid Wall Leachate Pipe (7-06) $_____ (Words) Per Linear Feet	$_____	$_____
15.	682 LF	3-Inch HDPE Solid Wall Leachate Pipe (7-06) $_____ (Words) Per Linear Feet	$_____	$_____
16.	635 LF	6-Inch HDPE Perforated Leachate Pipe (7-06) $_____ (Words) Per Linear Feet	$_____	$_____

INFORMATIONAL COPY ONLY - NOT FOR BIDDING PURPOSES

ITEM NO.	ESTIMATED QUANTITY	DESCRIPTION OF ITEM	UNIT PRICE	AMOUNT
17.	316 LF	8-Inch Buried HDPE Solid Wall LFG Pipe (7-10) $_____ (Words) Per Linear Feet	$_____	$_____
18.	426 LF	6-Inch HDPE Solid Wall LFG Pipe (7-10) $_____ (Words) Per Linear Feet	$_____	$_____
19.	1,374 LF	4-Inch HDPE Solid Wall LFG Pipe (7-10) $_____ (Words) Per Linear Feet	$_____	$_____
20.	13 EA	Modified Existing LFG Wellheads (7-10) $_____ (Words) Per Each	$_____	$_____
21.	14 EA	LFG Wellheads (7-10) $_____ (Words) Per Each	$_____	$_____
22.	4 EA	Geomembrane Penetrations (8-05) $_____ (Words) Per Each	$_____	$_____
23.	400 LF	6-Inch HDPE Solid Wall Trench Pipe (7-10) $_____ (Words) Per Linear Feet	$_____	$_____
24.	3,000 LF	6-Inch HDPE Perforated Trench Pipe (7-10) $_____ (Words) Per Linear Feet	$_____	$_____
25.	3,400 LF	4-Inch HDPE Perforated Trench Pipe (7-10) $_____ (Words) Per Linear Feet	$_____	$_____

INFORMATIONAL COPY ONLY - NOT FOR BIDDING PURPOSES

ITEM NO.	ESTIMATED QUANTITY	DESCRIPTION OF ITEM	UNIT PRICE	AMOUNT
26.	LS	LFG Meters (7-10)		
		$_____ (Words) Per Lump Sum	L.S.	$_____
27.	LS	Trimming and Cleanup (2-11)		
		$_____ (Words) Per Lump Sum	L.S.	$_____
28.	LS	Flare Facility (7-10)		
		$_____ (Words) Per Lump Sum	L.S.	$_____
29.	LS	Electrical and Control System (7-13)		
		$ (Words) Per Lump Sum	L.S.	$_____
		Total Bid Items 1-29		$_____
		Washington State Sales Tax (8.4%)		$_____
		Phase 3 Development Grand Total		$_____

INFORMATIONAL COPY ONLY - NOT FOR BIDDING PURPOSES

ADDENDA RECEIVED

1. The Contract amount shall be the lump sum or unit price of each item. Correct extensions based on the unit prices bid and the approximate quantities shown are for the comparison of bids only and payments for unit priced items will be based on actual quantities measured in accordance with the requirements of the Contract Specifications. Limits of lump sum priced items will be as described in the Contract Plans and Specifications.

   The undersigned has checked the above amounts and understands that the OWNER will not be responsible for any errors or omissions on the part of the undersigned in making up this proposal.

2. The undersigned understands that the OWNER reserves the right to reject any or all bids and to waive any informality in bids received that in the judgment of the OWNER is in the best interest of the OWNER.

3. It is agreed that this proposal may not be withdrawn within a period of sixty (60) days after the date set for the opening thereof.

4. Enclosed herein is cash, certified check, cashier's check, or surety bond for the sum of _____, dollars - not being less than five percent (5%) of the total amount of this proposal; and the undersigned agrees that, in case of his default in executing the Contract and the necessary bonds after award and due notice thereof, the cash, certified check, cashier's check, or surety bond and the money payable thereon shall become and remain the property of the OWNER, as liquidated damages without proof of actual loss.

5. In accordance with the Specifications, the undersigned further agrees to so plan the work and to prosecute it with such diligence that said work shall be commenced within ten (10) calendar days after the OWNER issues a Notice to Proceed with the work to the Contractor. All work schedules on this project shall be completed in accordance with Section 1-08.5 of the Specifications.

6. Receipt of the following Addenda to the Plans and/or Specifications is hereto acknowledged:

Addendum No.	Addendum Receipt Date	Signed Acknowledgment
1	_____	_____
2	_____	_____
3	_____	_____
4	_____	_____

(NOTE: Failure to acknowledge receipt of the addenda may be considered as an irregularity in the proposal.)

INFORMATIONAL COPY ONLY - NOT FOR BIDDING PURPOSES

7. List of Subcontractors: Pursuant to 1999 legislative changes to RCW 39.30.060, for every contract that is expected to cost ***one million dollars or more*** for the construction, alteration, or repair of any public work, the bidder shall list as part of its bid either itself or the names of the subcontractors with whom the bidder, if awarded the contract, will subcontract for performance of the work of heating, ventilation and air conditioning, plumbing as described in chapter 18.106 RCW, and electrical as described in chapter 19.28 RCW. The bidder shall not list more than one subcontractor for each category of work identified, unless subcontractors vary with bid alternates, in which case the bidder must indicate which subcontractor will be used for which alternate. Failure of the bidder to submit as part of the bid the names of such subcontractors or to name itself to perform such work or the naming of two or more subcontractors to perform the same work shall render the bidder's bid non-responsive and, therefore, void. The requirements of this section to name the bidder's proposed heating, ventilation and air conditioning, plumbing, and electrical subcontractors applies only to proposed heating, ventilation and air conditioning, plumbing, and electrical subcontractors who will contract directly with the general contractor submitting the bid to the County.

   The County requires the bidder to identify who will perform the following work identified. Please list either the bidder's name, or if a subcontractor will be performing this work, list that firm's name. If the identified description of work is not applicable, note that the identified work is not applicable.

Description of Work	Name of Firm	Technical Specifications, including not limited to the following
HVAC system		
Plumbing		
Electrical		

8. The following list identifies categories of work and firms whose subcontract will exceed ten percent of the submitted bid price. This must be submitted as part of the bid or within one hour after the published bid submittal time in order to fulfill the requirements of RCW 39.04.010.

Contractor Firm Name	Contractor Number	Category	Amount
1.			
2.			
3.			
4.			
5.			
6.			

INFORMATIONAL COPY ONLY - NOT FOR BIDDING PURPOSES

ADDENDA RECEIVED

_____ _____
(Bidder) (Date)

_____
(Contractor's License No.)

By _____
(Authorized Official)

_____
(Address)

NOTES:

1. If the Bidder is a co-partnership, so state, giving firm name under which business is transacted.
2. If the Bidder is a corporation, this proposal must be executed by its duly authorized officials.

INFORMATIONAL COPY ONLY - NOT FOR BIDDING PURPOSES

STATEMENT OF INTENDED SURETY

(Required if Bid Deposit is NOT a Surety Bond)

Furnish with your sealed bid a written statement prepared and signed by your intended sureties, or surety company, to the effect that: _____ (Name of Surety) will promptly provide a performance and payment bond in the amount of 100 percent of the Bid Proposal in the event _____ (Bidder's Name) is awarded **Ephrata Landfill Phase 3 Development**, the County of Grant and the proposed Construction Contract is acceptable to the Surety.

This statement, if required, must be included in your sealed Bid Proposal for your Bid Proposal to be considered.

_____
Name of Bidder

(Seal if Corporation)

By _____

Title _____

Date _____

INFORMATIONAL COPY ONLY - NOT FOR BIDDING PURPOSES

BID BOND

KNOW ALL MEN BY THOSE PRESENT, that we, _____ of _____, as PRINCIPAL, and the _____, a corporation duly organized under the laws of the State of _____ and authorized to do business in the State of Washington, as surety, are held and firmly bound unto Grant County in the full and penal sum of five (5) percent of the total amount of the Bid Proposal of said PRINCIPAL for the work hereinafter described for the payment of which, well and truly to be made, we bind our heirs, executors, administrators and assigns, and successors and assigns, firmly by these presents.

The condition of this bond is such that, the PRINCIPAL herein is herewith submitting his or its sealed Bid Proposal for the following construction, to wit:

Ephrata Landfill Phase 3 Development

said Bid Proposal, by reference thereto, being made part hereof.

NOW, THEREFORE, if the said Bid Proposal submitted by the said PRINCIPAL be accepted, and the Contract be awarded to said PRINCIPAL, and if the said PRINCIPAL shall duly make and enter into and execute said Contract and shall furnish the Performance and Payment Bond as required by Grant County within a period of ten (10) calendar days from and after said award, exclusive of the day of such award, then this obligation shall be null and void, otherwise it shall remain and be in full force and effect.

IN TESTIMONY WHEREOF, the PRINCIPAL and surety have caused these presents to be signed and sealed this _____ day of _____, 2020.

_____	_____
Principal	Principal
_____	_____
Surety	Attorney-in-Fact†

_____

† This bond must be accompanied by a fully executed Power-of-Attorney appointing the Attorney-in-Fact.

INFORMATIONAL COPY ONLY - NOT FOR BIDDING PURPOSES

NON-COLLUSION AFFIDAVIT

STATE OF WASHINGTON)
) ss
COUNTY OF GRANT)

_____, being duly sworn, on his/her oath, says that the Bid Proposal above submitted is a genuine and not a sham or collusive Bid Proposal, or made in the interest of or on the behalf of any person not therein named; and he/she further says that the said Bidder has not directly or indirectly induced or solicited any Bidder or corporation to refrain from bidding; and that said Bidder has not in any manner sought by collusion to secure to themselves an advantage over any other Bidder or Bidders.

_____

_____
Contractor

Subscribed and sworn to before me this_____ day of _____, 2020.

Notary Public in and for the
State of Washington

My appointment expires_____

INFORMATIONAL COPY ONLY - NOT FOR BIDDING PURPOSES

CONTRACT

THIS AGREEMENT, made and entered into this between the Board of County Commissioners of Grant County, State of Washington, acting under and by virtue of Chapter 36.77 of the Revised Code of Washington, as amended, hereinafter called the County, and _____, for itself, its heirs, executors, administrators, successors and assigns, hereinafter called the Contractor.

WITNESSETH:

That in consideration of the payments, covenants, and agreements, hereinafter mentioned, and attached and made a part of this agreement, to be made and performed by the parties hereto, and the parties hereto covenant and agree as follows:

DESCRIPTION OF WORK:

1. The Contractor shall do all work and furnish all tools, materials, and equipment necessary to improve and complete **Ephrata Landfill Phase 3 Development,** located in Grant County, Washington, as proposed in a bid opened **1:30 P.M., Tuesday, July 28th, 2020** in accordance with and as described in the herein attached plans and standard specifications, and in full compliance with the terms, conditions, and stipulations herein set forth and attached, now referred to any by such reference incorporated herein and made part hereof as fully for all purposes as if here set forth at length, and shall perform any alterations in or additions to the work covered by this contract and every part thereof and any force account work may be ordered as provided in this contract and every part thereof.

2. The Contractor shall provide and be at the expense of all materials, labor, carriage, tools, implements and conveniences and things of every description that may be requisite for the transfer of materials and for constructing and completing the work provided for in this contract and every part thereof.

3. The County hereby promises and agrees with the Contractor to employ, and does employ the Contractor to provide the materials and to do and cause to be done the above described work and to complete and finish the same according to the attached plans and specifications and the terms and conditions herein contained, and hereby contracts to pay for the same according to the attached specifications and the schedule of unit or itemized prices hereto attached, at the time and in the manner and upon the conditions provided for in this contract and every part thereof. The County further agrees to employ the Contractor to perform any alterations in or additions to the work covered by this contract and every part thereof and any force account work that may be ordered and pay for same under the terms of this contract and the attached plans and specifications.

4. The Contractor for himself, and for his heirs, executors, administrators and assigns, and successors and assigns, does hereby agree to the full performance of all the covenants herein contained upon the part of the Contractor.

5. It is further provided that no liability shall attach to the County by reason of entering into this contract, except as expressly provided herein.

INFORMATIONAL COPY ONLY - NOT FOR BIDDING PURPOSES

IN WITNESS WHEREOF, the said Contractor has executed this instrument, and the said Board of County Commissioners of aforesaid County has caused this instrument to be executed by and in the name of said Board by its Members, duly attested by its Clerk, and the seal of said Board to be hereunto affixed.

_____, 2020

_____
Signature

_____
Print Name

_____
Firm Name

_____
Address

_____
City State Zip

(____)_____
Phone

ATTEST:

_____
Clerk of the Board

APPROVED AS TO FORM:

____day of _____,2020

_____
Prosecuting Attorney

BOARD OF COUNTY COMMISSIONERS
OF GRANT COUNTY, WASHINGTON

Done this _____ day of _____, 2020

_____
Chairman

_____
Commissioner

_____
Commissioner

INFORMATIONAL COPY ONLY - NOT FOR BIDDING PURPOSES

CONTRACT BOND

KNOW ALL MEN BY THESE PRESENTS:

That we, the undersigned, _____, as principal, and _____, a corporation organized and existing under the laws of the State of _____, as surety corporation, and qualified under the laws of the State of Washington to become surety upon bonds of contractors with municipal corporations, as surety, are jointly and severally held and firmly bound to Grant County, Washington, in the penal sum of _____ _____ ($_____) for the payment of which sum on demand we bind ourselves and our successors, heirs, administrators or personal representatives, as the case may be.

This obligation is entered into in pursuance of the statutes of the State of Washington, the Ordinances of Grant County, Washington.

Dated at _____, Washington, this _____ day of _____, 2020.

The conditions of the above obligation are such that:

WHEREAS, on _____, **2020**, the Board of County Commissioners of said Grant County has let or is about to let to the Principal, a certain contract, the said contract providing for the improvement of **Ephrata Landfill Phase 3 Development,** located in Grant County, Washington, (which contract is referred to herein and is made a part hereof as though attached hereto), and

WHEREAS, the said Principal has accepted, or is about to accept, the said contract, and undertake to perform the work therein provided for in the manner and within the time set forth;

NOW, THEREFORE, if the said Principal shall faithfully perform all of the provisions of said contract in the manner and within the time therein set forth or within such extensions of time as may be granted under said contract, and shall pay all laborers, mechanics, subcontractors and material men, and all persons who shall supply said Principal or subcontractors with provisions and supplies for the carrying on of said work, and shall hold said Grant County harmless from any loss or damage occasioned to any person or property by reason of any carelessness or negligence on the part of said Principal, or any subcontractor in the performance of said work and shall indemnify and hold Grant County harmless from any damage or expense by reason of failure of performance as specified in said contract or from defects appearing or developing in the material or workmanship provided or performed under said contract, and until the same is accepted, then and in that event this obligation shall be void but otherwise it shall be and remain in full force and effect.

Countersigned:

_____
Licensed Agent/Surety Co.

_____
Principal

_____
Attorney-in-Fact, Surety

_____

(_____)
Firm, Street Address (**No P.O. Box**), Phone of Local Office of Agent

Approved as to form:

_____, 2020

_____
Prosecuting Attorney

INFORMATIONAL COPY ONLY - NOT FOR BIDDING PURPOSES

INSTRUCTIONS TO BIDDERS

1. Intent of Plans and Specifications

It is the intention of these Specifications to provide for careful, thorough, and workmanlike construction procedures in the installation of materials and equipment and in the manufacture and delivery of such materials and equipment. The Bidder to whom the contract is awarded shall furnish all the material and labor necessary to complete said contract in accordance with all of its terms and conditions.

The Plans and Specifications shall be considered and used together; anything appearing as a requirement of either shall be accepted as applicable to both even though not so stated therein or shown. The ENGINEER may furnish supplemental plans and specifications to define more clearly any requirement of the original documents; these shall be accepted by the Contractor as of the same force and effect as though they had been included among the original drawings and in case of any conflict between the original and the supplemental drawings, the latter shall govern. The Contractor shall not be entitled to extra payment because of his compliance with the requirements of such supplemental drawings unless they contain new requirements involving costs which clearly could not have been anticipated by an experienced Contractor in his examination of the original drawings or could not reasonably be inferred there from as requirements of the contract.

All Specifications and notes appearing on the Plans shall have the same force and effect as though they were repeated herein.

2. Examination of Contract Documents

Each Bidder shall thoroughly examine and be familiar with legal and procedural documents, general conditions, Specifications, Plans, and Addenda (if any). The submission of a proposal shall constitute an acknowledgment that the Bidder has thoroughly examined and is familiar with the contract documents. The failure or neglect of a Bidder to receive or examine any of the contract documents shall in no way relieve the Bidder from any obligations with respect to the Bidder's proposal or to the Contract. No claim for additional compensation will be allowed which is based upon a lack of knowledge of any contract document, and the OWNER will in no case be responsible for any loss or for unanticipated costs that may be suffered by the Contractor as a result of conditions pertaining to the work.

3. Examination of Site and Conditions

Before making a proposal, the Bidder shall examine the site of the work and ascertain for themselves all the physical conditions in relation thereto. Failure to take this precaution shall not release the Bidder from the Bidder's obligation as implied by the proposal the Bidder submits nor excuse the Bidder from performing the work in strict accordance with the requirements of the contract documents.

No statement made by any officer, agent, or employee of the OWNER pertaining to the site of the work or the conditions under which the work must be performed will be binding on the OWNER.

INFORMATIONAL COPY ONLY - NOT FOR BIDDING PURPOSES

4. Subsurface Exploration Data

The following subsurface exploration and soils data are available for review at the County Engineer's office.

a. Ephrata New Landfill WAC 173-351 Permit Application.

5. Addenda and Interpretations of Documents

No interpretation of meaning of the Plans, Specifications or other pre-bid documents will be made to any Bidder orally. Every request for such interpretation shall be submitted in writing, addressed to Parametrix, Inc., 719 2nd Avenue, Suite 200, Seattle, Washington 98104, and to be given consideration, shall be received at least five (5) working days prior to date fixed for opening of bids. Any and all such interpretations and any supplemental instructions will be in the form of written addenda to the Specifications which, if issued, will be mailed or otherwise delivered to each prospective Bidder. Failure of any Bidder to receive any such addendum shall not relieve such Bidder from any obligation under his bid as submitted. All addenda so issued shall become a part of the contract documents.

6. Preparation of Proposal

Bids must be submitted by filling in with ink (or typing) each and every blank provided for such purpose in the form headed "Proposal." Where indicated, all blank spaces shall be filled in with words and figures. Consideration of bids shall be according to Section 1-03.1.

If the proposal is made by a partnership, it should contain the name of each partner and should be signed in the firm name, followed by the signature of a partner or that of a person duly authorized to act for and on behalf of such partnership. If made by a corporation, the proposal should be signed with the name of the corporation and the state in which incorporated, followed by the written signature of the qualified officer and the designation of the office he holds in the corporation.

The address of the person, firm or corporation in whose behalf the proposal is submitted shall be given. The Bidder shall comply with all other specific requirements of the proposal form.

7. Approximate Quantities

On all items on which bids are to be received on a unit price basis the quantities stated in the bid will not be used in establishing final payment due the Contractor. The quantities stated, on which unit prices are invited, are approximate only, and each Bidder shall make their own estimate from the Plans of the quantities required on each item and calculate his unit price bid for each item accordingly. Bids will be compared on the basis of number of units stated in the bidding schedule. Payment on the contract on unit price items will be based on the actual number of units installed in the completed work.

8. Material Substitution

Each Bidder shall base their bid upon the materials and equipment as described in the bidding documents. The successful Contractor will not be allowed to make any substitutions on their own initiative, but in each instance will be required to obtain authorization from the OWNER before installing any work in variance with the requirements of the contract documents.

INFORMATIONAL COPY ONLY - NOT FOR BIDDING PURPOSES

9. Supplemental Schedule of Unit Prices

Where the proposal form requires a lump sum bid for a particular item (or items) and further requires the Bidder to submit a supplemental schedule of unit prices for possible construction changes in such item(s), the OWNER may, if it considers such unit prices reasonable, include these prices in the construction contract. If the OWNER considers such unit prices as unreasonable the OWNER may omit them from the construction contract. Rejection prior to execution of the contract of such unit prices for construction changes as stated in the bid shall not otherwise affect the balance of the bid or construction contract.

10. Alteration of Documents Prohibited

Except as may be provided otherwise herein, proposal forms which are incomplete, are conditioned in any way which the Plans or Specifications do not authorize, contain unverified erasures or alterations, include items which are not named in the proposal form or which are unlawful, may be rejected as informal.

11. Submission of Proposal

Each proposal form shall be completely sealed in a package addressed as required by the official advertisement, marked with the name of the Bidder and the title of the project; it must be delivered to the address at or before the time named in said advertisement. If forwarded by mail, the sealed envelope containing the proposal shall be enclosed in another envelope addressed as specified in the proposal form.

12. Modification of Proposal

Changes in a proposal form already delivered will be permitted only if a request for the privilege of making such modification is made in writing signed by the Bidder and the specific modification itself is stated prior to the scheduled closing time for the receipt of proposals. To be effective every modification must be made in writing over the signature of the Bidder; no other form of procedure will be acceptable.

13. Bid Security

Each bid must be accompanied by a bid deposit, which may be cash, certified check, cashier's check, or surety bond duly executed by the Bidder as principal and having as surety thereon a surety company authorized to issue such bonds in Washington in the amount of 5 percent of the total bid.

If the bid deposit is not a surety bond, a Statement of Intended Surety must be provided with proposal form.

14. Return of Bid Securities

The bid deposits will be returned promptly to all bidders with the exception of the 1st and 2nd low bidders. The bid deposits of the 1st and 2nd low bidders shall be returned after the OWNER and the accepted Bidder have executed the contract for the work, or, if award has not been made within sixty (60) days after the date of the opening of bids, upon demand of the Bidder at any time thereafter, so long as the Bidder has not been notified of the acceptance of his bid. The successful Bidder, upon the successful Bidder's failure or refusal to execute and deliver the

INFORMATIONAL COPY ONLY, NOT FOR BIDDING PURPOSES

contract and bonds required within ten (10) calendar days after the successful Bidder has received notice of the acceptance of the successful Bidder's bid, shall forfeit to the OWNER, as liquidated damages for such failure or refusal, the security deposited with the successful Bidder's bid. If all bids are rejected the securities will be returned at the time of rejection.

15. Withdrawal of Proposal

A proposal may be withdrawn at any time prior to the scheduled closing time for filing bids. This may be done by the Bidder in person, or upon his telegraphic or written request. A telephoned request for withdrawal of a proposal will not be recognized for this purpose. If withdrawal is made personally, a written acknowledgment thereof will be required.

After the scheduled closing time for filing bids, no Bidder will be permitted to withdraw their proposal unless no award of contract has been made prior to sixty (60) days immediately following the scheduled closing time for bids. Bids received after the scheduled closing time will be returned to the Bidder unopened.

16. Qualification of Bidders

It is the intention of the OWNER to award a contract only to a Bidder who furnishes satisfactory evidence that the Bidder has the requisite experience and ability and that the Bidder has sufficient capital, facilities, and plant to enable the Bidder to prosecute the work successfully and promptly, and to complete the work within the time specified in the Contract Documents.

The OWNER may make such investigations deemed necessary to determine the ability of the Bidder to perform the work and the Bidder shall furnish to the OWNER all such information and data for this purpose as the OWNER may request.

Each Bidder shall possess state and local licenses in accordance with the applicable state and local laws and shall furnish satisfactory proof to the OWNER upon request that the licenses are in effect during the entire period of the contract.

17. Disqualification of Bidders

More than one bid for the same work described in this document, from an individual, firm or partnership, a corporation or an association under the same or different names, will not be considered. Reasonable grounds for believing that any Bidder is interested in more than one bid for the work contemplated will cause the rejection of all bids in which such Bidder is interested. If there are reasonable grounds for believing that collusion exists among the Bidders, the bids of the participants in such collusion will not be considered.

INFORMATIONAL COPY ONLY NOT FOR BIDDING PURPOSES

INFORMATIONAL COPY ONLY - NOT FOR BIDDING PURPOSES

STANDARD SPECIFICATIONS

INFORMATIONAL COPY ONLY - NOT FOR BIDDING PURPOSES

STANDARD SPECIFICATIONS

The "2020 Standard Specifications for Road Bridge and Municipal Construction (English)" including the APWA Supplement prepared by the Washington State Department of Transportation and the Washington State Chapter of the American Public Works Association (APWA) and all amendments thereto, including the "Division One Supplement," shall be hereinafter referred to as the "Standard Specifications" together with the laws of the State of Washington, so far as applicable, are hereby included in these Specifications and shall apply as though quoted in their entirety.

GENERAL PROVISIONS
AMENDMENTS TO THE STANDARD SPECIFICATIONS

The following Amendments to the Standard Specifications are made part of this contract and supersede any conflicting provisions of the Standard Specifications. For informational purposes, each Amendment title indicates the implementation date of the Amendment or the latest date of revision.

Each Amendment contains all current revisions to the applicable section of the Standard Specifications and may include references which do not apply to this particular project.

SPECIAL PROVISIONS

The following Special Provisions are made a part of this contract documents and supersede any conflicting provisions of the 2020 Standard Specifications for Road, Bridge, and Municipal Construction (English), and the foregoing amendments to the Standard Specifications. Division and subdivision numbers of this document refer to a corresponding number in the Standard Specifications. Unused division and subdivision numbers in the Standard Specifications are used to specify items of work and materials that are not included in the Standard Specifications. All provisions of the Standard Specifications, which are not so amended, replaced, deleted, or supplemented, remain in full force and effect. In case of conflict, the Special Provisions shall take precedence over the Standard Specifications.

STANDARD PLANS

The "Standard Plans for Road, Bridge, and Municipal Construction," prepared by the Washington State Department of Transportation shall be hereinafter referred to as the "Standard Plans."

INFORMATIONAL COPY ONLY - NOT FOR BIDDING PURPOSES

GENERAL PROVISIONS AMENDMENTS

INFORMATIONAL COPY ONLY - NOT FOR BIDDING PURPOSES

SPECIAL PROVISIONS

INFORMATIONAL COPY ONLY - NOT FOR BIDDING PURPOSES

DIVISION 1
GENERAL REQUIREMENTS

1-01 DEFINITIONS AND TERMS

1-01.2 ABBREVIATIONS

1-01.2(1) Associations and Miscellaneous

Supplement this section with the following:

GRI	Geosynthetic Research Institute

1-01.2(2) Items of Work and Units of Measurement

Supplement this section with the following:

cm/s	Centimeter Per Second
CP	Cleanout Pipe
FTB	Film Tear Bond
GRI	Geosynthetic Research Institute
GCL	Geosynthetic Clay Liner
HDPE	High Density Polyethylene
LCP	Leachate Collection Pipe
LFG	Landfill Gas
mil	One Thousandth of an Inch
CD	Condensate Drain
CC	Condensate Collection

1-01.3 DEFINITIONS

Supplement this section with the following:

Where the term "Engineer" appears in the Contract Documents (including the Standard Specifications) it shall mean Parametrix, Inc., located at 719 2nd Avenue NE, Suite 100, Seattle, Washington, 98104, acting as the duly authorized representative of Grant County Public Works Department in the administrative management of the Contract.

Where the term "Owner," "Contracting Agency," "Department," or "Department of Transportation," appears in the Contract Documents (including the Standard Specifications) it shall mean the Grant County Public Works Department, as represented by its authorized officers, employees or agents.

Where the terms "Commission," "Washington State Transportation Commission," "Secretary of Transportation," appears in the Contract Documents (including the Standard Specifications), it shall mean Board of County Commissioners, Grant County, Washington.

Where the terms "State" or "State of Washington," appears in the Contract Documents (including the Standard Specifications), it shall mean Grant County, Washington.

Where the terms "Superior Court of Thurston County, Washington," appears in the Contract Documents (including the Standard Specifications), it shall mean Superior Court of Grant County, Washington.

INFORMATIONAL COPY ONLY - NOT FOR BIDDING PURPOSES

Where the term "Specifications" appears in the Contract Documents it shall mean the Standard Specifications and the Special Provisions.

1-02 BID PROCEDURES AND CONDITIONS

1-02.1 QUALIFICATIONS OF BIDDER

Replace this section with the following:

> Bidders shall be qualified by experience, financing, equipment, and organization to do the work called for in the plans and specifications. The Contracting Agency reserves the right to take whatever action it deems necessary to ascertain in ability of the bidder to perform the work satisfactorily. The Contracting Agency's actions may include a pre-qualification procedure prior to the bidder being furnished a proposal form on any contract, or a pre-award survey of the bidder's qualifications prior to award.

1-02.2 PLANS AND SPECIFICATIONS

Section 1-02.2 is replaced with the following:

> Copies of the Plans and Specifications may be obtained from Grant County Public Works Department, 124 Enterprise St. S.E., Ephrata, Washington, 98823, in accordance with conditions as set forth in the Notice to Contractors.
>
> After award of the Contract, up to five (5) sets of Plans and Specifications will be provided to the CONTRACTOR at no charge. Additional copies of the Plans and Specifications may be obtained on request by paying the actual cost of reproduction.

1-02.6 PREPARATION OF PROPOSAL

Section 1-02.6 is supplemented with the following:

> On this project, the bidder shall be required to submit with the bid a list of:
>
> Subcontractors
>
> The work the subcontractors will perform.

1-02.9 DELIVERY OF PROPOSAL

Delete the first paragraph of this section and replace it with the following:

> Each proposal shall be found in the Contract Specifications and Submitted in a sealed envelope marked clearly: "**Bid for Ephrata Landfill, Phase 3 Development**." The name and address of the company submitting the proposal shall be marked on the envelope.

1-03 AWARD AND EXECUTION OF CONTRACT

1-03.2 AWARD OF CONTRACT

Section 1-03.2 is supplemented with the following:

> The Award of the Contract is conditioned upon the amount of funds, including contingency, available for the Contract.

INFORMATIONAL COPY ONLY - NOT FOR BIDDING PURPOSES

1-04 SCOPE OF WORK

1-04.3 PROJECT DESCRIPTION

This project provides for development of the expansion landfill area to the north of the existing active landfill. Phase 3 is approximately 18 acres. Generally, this requires excavation/embankment, grading and compacting subgrade, construction of a landfill composite bottom lining system, installation of HDPE leachate collection, cleanout, and transfer piping systems, perimeter road construction and grading, stormwater perimeter ditch, and landfill gas system piping. The landfill gas system will require electrical and controls to activate the existing system. Blowers, piping, valves, etc will be required to activate the landfill gas system. Condensate system between the proposed blowers and existing condensate manhole requires excavation to expose piping to verify pipe condition, slope, and drainage.

Condensate manhole station CM-2 requires the replacement of the control panel.

Major portion of the excavation necessary to prepare the subgrade of the new cell has been completed. However, there will be additional excavation, embankment and compaction work, and fine grading to construct the completed subgrade in conformity with the design. Soil quantities shall be attained from the County's on site borrow areas, as identified on the Plans.

The development is to be constructed in accordance with the regulations Washington Administrative Code (WAC) Chapter 173-351 Criteria for Municipal Solid Waste Landfills. For the bottom liner this requires a composite system composed of a GCL and an overlying 60-mil HDPE geomembrane. The geotextile cushion layer is to provide protection for the liner system. The leachate collection system consists of a drain rock material providing good subsurface drainage, allowing no more than 12 inches of water to pool over the HDPE geomembrane.

1-04.11 Final Cleanup

Section 1-04.11 is supplemented with the following:

> The CONTRACTOR shall also cleanup the development areas, landfill, material stockpiles, haul routes, staging areas, storage areas, and any other areas the CONTRACTOR and his construction activities have impacted to the ENGINEER'S satisfaction in accordance with Section 2-11.

1-05 CONTROL OF WORK

1-05.3 WORKING DRAWINGS

Section 1-05.3 is supplemented with the following:

> "The CONTRACTOR shall submit three (3) prints of working or shop drawings with For Information Only (FIO) designation and six (6) prints of working or shop drawings with County Approval (CA) designation to the ENGINEER as to the method of construction and design prior to commencement of the work under the contract or delivery to the project site of any equipment or material covered by the drawings, whichever is later. Approval of the ENGINEER is not required for information only submittals. The ENGINEER reserves the right to require the CONTRACTOR to resubmit any item found not to comply with the contract. This does not relieve the CONTRACTOR from the obligation to furnish material conforming to the plans and specifications and will not prevent the ENGINEER from requiring removal or replacement of nonconforming material incorporated into the work. This does not relieve the CONTRACTOR of the requirement to furnish samples for testing by the ENGINEER'S laboratory or for check testing by the ENGINEER in those instances where the technical specifications so prescribe.

INFORMATIONAL COPY ONLY - NOT FOR BIDDING PURPOSES

Submittals will be monitored and spot checks will be made. When such checks indicate non-compliance, the CONTRACTOR will be notified by the same method used for County approval. An additional completed transmittal form shall be submitted (without attachments) which will be returned to the CONTRACTOR to signify the submittal has been received."

At the pre-construction meeting, the CONTRACTOR shall submit a list of submittals to the County.

The following checklist is intended to aid in the preparation of the Transmittal Form and related transmittals and is intended only as a partial summary of requirements stated elsewhere within this specification.

1. Use originals of the Transmittal Form. Do NOT use photocopies.
2. Do NOT submit multiple 5-digit specification sections on one Transmittal Form.
3. Subsequent submittals shall be numbered sequentially as submitted except for resubmittals. Resubmittals must be related to the parent (original) transmittal (i.e., transmittal No. 2 resubmittal would be number 2A, etc.).
4. County Approval (CA): Submit five copies of enclosures, each with Transmittal Form attached. For Information Only (FIO): Submit three copies of enclosures, each with Transmittal Forms attached and one additional copy of the Transmittal Form.
5. Break the submittal into items, which can be reviewed independently. For a transmittal with more than nine items, use multiple sets of Transmittal Forms.
6. Item numbers must be written on the enclosures and the Transmittal Form (column A).
7. There shall be a reviewer's set with one copy of all items (not the originals) with the remainder of the submittal having each item and associated copies in separate bundles.
8. Each item of an enclosure shall be "approval stamped" by the CONTRACTOR.
9. Enter the specification technical paragraph for each item in column "e" on the Transmittal Form.
10. Identify the contract drawing number that applies, if applicable in column "f" on the Transmittal Form.
11. Variations shall be identified in column "g" on the Transmittal Form and justified in the Remarks Block and five copies submitted for County Approval.
12. Cross out inapplicable portions of submitted data or point to exact equipment being used on the project.
13. Allow a minimum of 7 days for submittals requiring County Approval. Justify exceptions for shorter periods.
14. SIGN the Transmittal Form.

INFORMATIONAL COPY ONLY - NOT FOR BIDDING PURPOSES

INFORMATIONAL COPY ONLY - NOT FOR BIDDING PURPOSES

TRANSMITTAL OF SHOP DRAWINGS, EQUIPMENT DATA, MATERIAL SAMPLES, OR MANUFACTURER'S CERTIFICATES OF COMPLIANCE (Read Instructions on the reverse side prior to initiating this form)	DATE	☐ NEW SUBMITTAL ☐ RESUBMITTAL

Section I — REQUEST FOR APPROVAL OF THE FOLLOWING ITEMS (This section will be initiated by the contractor)

TO:	FROM:	CONTRACT NO.	TRANSMITTAL NO.
			PREVIOUS TRANS. NO (If any)
SPECIFICATION SEC. NO. (Cover only one section with each transmittal)	PROJECT TITLE AND LOCATION		

ITEM NO.	DESCRIPTION OF ITEM SUBMITTED (Type, size, model number, etc.)	MFG. OR CONTR. CAT., CURVE DRAWING OR BROCHURE NO. (See instruction No 8)	NO. OF COPIES	CONTRACT REFERENCE DOCUMENT		VARIATION (See instruction No. 6)	FOR C E USE CODE
				SPEC. PARA. NO.	DRAWING SHEET NO.		
a.	b.	c.	d.	e.	f.	g.	h.

REMARKS

I certify that the above submitted items have been reviewed in detail and are correct and in strict conformance with the contract drawings and specifications except as otherwise stated

NAME AND SIGNATURE OF CONTRACTOR

Section II — APPROVAL ACTION

ENCLOSURES RETURNED (List by Item No.)	NAME, TITLE, SIGNATURE OF APPROVING AUTHORITY	DATE

INFORMATIONAL COPY ONLY - NOT FOR BIDDING PURPOSES

INSTRUCTIONS FOR TRANSMITTAL FORM

1. Section I will be initiated by the Contractor in the required number of copies.

2. Each transmittal shall be numbered consecutively in the space provided for "Transmittal No." This number, in addition to the contract number, will form a serial number for identifying each submittal. For new submittals or resubmittals, mark the appropriate box; on resubmittals, insert transmittal number of last submission as well as the new submittal number.

3. Submittals requiring expeditious handling will be submitted on a separate form.

4. Separate transmittal form will be used for submittals under separate sections of the specifications.

5. A check shall be placed in the "Variation" column when a submittal is not in accordance with the plans and specifications. Also, a written statement to that effect shall be included in the space provided for "Remarks."

6. Form is self-transmittal; letter of transmittal is not required.

7. When a sample of material or Manufacturer's Certificate of Compliance is transmitted, indicate "Sample" or "Certificate" in column c, section I.

8. The owner will assign action codes as indicated below in space provided in section I, column h, to each item submitted. In addition, they will ensure enclosures are indicated and attached to the form prior to return to the contractor.

THE FOLLOWING ACTION CODES ARE GIVEN TO ITEMS SUBMITTED

A – Approved as submitted

B – Approved, except as noted on drawings.

C – Approved, except as noted on drawings. Refer to attached sheet resubmission required.

D – Will be returned by separate correspondence.

E – Disapproved *(See attached)*

F – Receipt acknowledged

FX – Receipt acknowledged, does not comply as noted with contract requirements.

G – Other (Specify)

9. Approval of items does not relieve the contractor from complying with all the requirements of the contract plans and specifications.

1-05.4 CONFORMITY WITH AND DEVIATIONS FROM PLANS AND STAKES

Section 1-05.4 is supplemented with the following:

The OWNER shall provide a minimum of two horizontal and one vertical control points for use by the CONTRACTOR. All other survey work needed for construction and acceptance of this project is the sole responsibility of the CONTRACTOR. The CONTRACTOR shall set any construction stakes and marks needed to establish the lines, grades, slopes, and cross sections to govern his work. The CONTRACTOR shall take full responsibility for detailed dimensions, elevations, and slopes. The ENGINEER/OWNER reserves the right to enter the work area to verify the accuracy of all marks and stakes and the accuracy of all excavation and rough grading as needed.

1-05.5 TOLERANCES

1-05.5(1) Roadway and Utility Surveys

1. General:

   The CONTRACTOR shall furnish all land surveys and construction stakeout necessary for the completion and acceptance of this project. All survey work shall be laid out and checked by a professional surveyor, licensed in the State of Washington. The CONTRACTOR shall furnish a certificate or document signed by the surveyor, certifying that the completed lines, levels, and elevations are in conformity with the contract in accordance with Section 1-05.11.

   The CONTRACTOR shall verify all lines, levels, and elevations indicated in the contract before any excavation or construction begins. Any discrepancy shall be immediately brought to the attention of the ENGINEER and any change shall be made in accordance with his instruction. The CONTRACTOR shall not be entitled to any additional payment if he fails to report the discrepancies before proceeding with work within the area affected by the discrepancies.

2. Topographic Survey

   Conduct a topographic survey and prepare a topographic map of the site with two-foot contours, accurate to plus or minus 0.1-foot (tenth of a foot), after site work is complete within the Limits of Construction as shown on the plans. Submit topographic map to ENGINEER for review. The map shall include all information from the utility and geosynthetic surveys. ENGINEER may field verify the accuracy of the survey.

3. Utility Survey

   Submit a utility survey of all fencing, ditches, piping, electrical, and storm drainage, indicating horizontal and vertical location, and inverts as appropriate. ENGINEER may field verify the accuracy of the survey.

4. Geosynthetic Surveys

   Submit a survey of the installed limits of the geomembrane, which shows the individual geomembrane panels and panel numbers as labeled by the geosynthetic installer. Also, the survey shall show the field seams, penetrations (boots), and repair locations and size with the unique identification name as labeled by geosynthetic installer or CQA personnel. The CONTRACTOR is cautioned that the surveys should occur prior to placing overlaying layer(s) on the geomembrane. ENGINEER may field verify the accuracy of the survey.

INFORMATIONAL COPY ONLY - NOT FOR BIDDING PURPOSES

1-05.5(2) Tolerances

The CONTRACTOR shall maintain a tolerance of plus or minus 0.5-foot for rough grading of cuts and excavations, and plus or minus 0.1-foot for final grades, GCL bedding layer, landfill subgrade grades, access roads, perimeter ditches and roads, and piping as shown on the Plans. Lines and grades shall be continuous with no grade breaks as shown on the Plans.

1-05.5(3) Measurement

No specific unit of measurement shall apply to the lump sum item for "Surveying."

1-05.5(4) Payment

Payment will be made in accordance with Section 1-04.1, for the following bid item "Surveying," per lump sum.

All work associated with the materials and labor associated with surveying in order to complete the construction and acceptance of this project. This includes, but is not limited to, all costs for labor, materials, tools, equipment, and services required to complete the construction of this project. Partial payments will be made once each month, based upon partial estimates prepared by CONTRACTOR and accepted by the OWNER.

1-05.6 INSPECTION OF WORK AND MATERIALS

Section 1-05.6 is supplemented with the following:

To ensure that the work is accomplished in accordance with the Plans and these Specifications, the ENGINEER and OWNER will perform construction quality assurance as described in the Construction Quality Assurance (CQA) Plan provided in Attachment A.

The CONTRACTOR shall assist the ENGINEER and OWNER in testing and measurement of the work. The CONTRACTOR shall supply manpower and equipment to assist in this testing and measurement.

1-05.10 GUARANTEES

Section 1-05.10 is supplemented with the following:

Additionally, if within one year after the date of Final Acceptance of the Work by the OWNER, defective and unauthorized work is discovered, the CONTRACTOR shall promptly, upon written request by the OWNER, return and in accordance with the ENGINEER'S instructions, either correct such work, or if such work has been rejected by the ENGINEER, remove it from the Project Site and replace it with non defective and authorized work, all without cost to the OWNER. If the CONTRACTOR does not promptly comply with the written request to correct defective and unauthorized work, or if an emergency exists, the OWNER reserves the right to have defective and unauthorized work corrected or rejected, removed, and replaced pursuant to the provisions of Section 1-05.7.

The CONTRACTOR agrees the above one year limitation shall not exclude or diminish the OWNER'S rights under any law to obtain damages and recover costs resulting from defective and unauthorized work discovered after one year but prior to the expiration of the legal time period set forth in RCW 9.16.040 limiting actions upon a contract in writing or liability, expressed or implied, arising out of a written agreement.

INFORMATIONAL COPY ONLY - NOT FOR BIDDING PURPOSES

1-05.11 FINAL INSPECTION

1-05.11(2) Record Drawing Information

The CONTRACTOR shall maintain a set of plans on site showing all deviations from the original plans, addenda, and change orders for this project. These plans shall be available for inspection by the ENGINEER during normal working hours. The plans shall be updated with this new information on a weekly basis. Prior to or concurrent with the physical completion date the CONTRACTOR shall provide a neatly marked set of plans and such other appropriate information denoting all deviations from the Plans, addenda, and change orders and other requirements listed below:

1. Limits of GCL, geomembrane installed, together with elevations. The completed geomembrane panel layout shall be included and in accordance with the provisions of Section 1-05.5(1).
2. All piping locations, appurtenance and structure locations, and elevations of piping and all piping at structures.
3. All roads, ditches, HDPE stormwater berms, and stockpiles locations and elevations within the Limits of Construction for this project.

The CONTRACTOR shall have these appropriate limits, locations, and elevations certified by a professional licensed surveyor registered in the State of Washington. The survey results for Record Drawings shall be submitted to the County on vellum and in AUTOCAD.DWG format Version LDT 2004 on a compact disk. The CONTRACTOR is cautioned that some of these surveys will need to be performed during construction prior to covering the items with other materials. The CONTRACTOR may combine these surveys with surveys required for determining pay quantities per Section 1-09.9(1) of these Specifications.

1-05.12 FINAL ACCEPTANCE

Section 1-05.12 is supplemented with the following:

Progress estimates shall not be construed as acceptance of any work under this contract. The OWNER shall not be barred from requiring the CONTRACTOR to remove, replace, repair, or dispose of any unauthorized or defective work or from recovering damages from any such work or material.

1-05.14 COOPERATION WITH OTHER CONTRACTORS

Section 1-05.14 is supplemented with the following:

It is anticipated that the following work adjacent to or within the limits of this project will be performed by others during the life of this project.

1. Daily landfill operations, activities, and construction by others at the Ephrata Landfill will be in progress during construction. The landfill's hours of operation are as noted in Section 1-08.0(2). The CONTRACTOR shall cooperate with the landfill staff and schedule work to ensure that there will be no interference or interruption of the existing landfill operations. The CONTRACTOR shall not use any of the landfill facilities except as noted in these Specifications. The CONTRACTOR may be required to work on weekends or after hours to ensure there is no interruption of landfill operations.
2. Utility relocations, installation, and/or normal maintenance work by telephone and power companies.

INFORMATIONAL COPY ONLY - NOT FOR BIDDING PURPOSES

1-05.16 ON-SITE TRAFFIC CONTROL

The CONTRACTOR'S construction activities shall be coordinated so that landfill operations are not adversely impacted. Access for the CONTRACTOR shall be through the rear entrance gate except when needing clearance for larger loads. The CONTRACTOR shall use the landfill's perimeter roads for ingress and egress to the work area and staging area.

1-06 CONTROL OF MATERIALS

1-06.1 APPROVAL OF MATERIAL PRIOR TO USE

Section 1-06.1 is supplemented with the following:

> Promptly after award of the Contract, the CONTRACTOR shall notify the ENGINEER, in writing, of the proposed sources of materials, suppliers, fabricators and installers including addresses, telephone numbers and names of contact persons. Approval by the ENGINEER is required for all sources of materials, suppliers, fabricators and installers before delivery is started. See Sections 7-06, 7-10, 7-13, and 8-05 for additional submittal requirements.

1-06.1(4) Fabrication Inspection Expense

Fabrication of an item or construction work shall not start before the ENGINEER has taken action on the shop drawings submittal. Any such work shall be entirely at the CONTRACTOR'S risk.

The CONTRACTOR shall prepare and submit a submittal register to the ENGINEER no later than ten (10) working days after the Notice to Proceed is issued by the OWNER. The submittal required for this Contract. The submittal register shall also indicate the expected submittal dates.

Submittals, shop drawings, project data, and samples shall be submitted and reviewed in the following manner:

1. The CONTRACTOR shall review, stamp with his approval and submit postpaid with such promptness as to cause no delay in his work or in that of any other CONTRACTOR, the required number of copies of all shop drawings, submittals, schedules, data, and samples required for the work.
2. The CONTRACTOR shall submit to the ENGINEER five (5) copies of submittals describing the actual materials and equipment to be furnished by the CONTRACTOR for this project. The submittals shall include shop drawings, manufacturer's literature, brochures, catalog cuts, and other pertinent data, which specify the materials or equipment.
3. The ENGINEER shall review the shop drawings within five (5) working days after receipt and will affix the Shop Drawings Review Stamp with notations thereon indicating "No Exceptions Taken," "Make Corrections Noted," "Revise and Resubmit," "Submit Specified Item," or "Rejected." The ENGINEER will then forward one (1) marked up copy of the submittal to the CONTRACTOR.
4. When submittals are required to be revised or corrected and resubmitted, the CONTRACTOR shall make such revisions and/or corrections and resubmit the submittal, drawings, and other material in the same manner as specified above. Except at his own risk, the CONTRACTOR shall not undertake work covered by the submittal until the submittal is returned to the CONTRACTOR, marked "No Exceptions Taken," or "Make Corrections Noted."
5. It shall be the CONTRACTOR'S responsibility to clearly note on the submittals, and in writing specifically call to the ENGINEER'S attention, any deviations from the Contract Drawings and

INFORMATIONAL COPY ONLY - NOT FOR BIDDING PURPOSES

Specifications. No review of the submittal by the ENGINEER shall relieve the CONTRACTOR of full responsibility and at his own cost and expense to comply with the Contract Documents unless the deviations are clearly noted and in writing called to the ENGINEER'S attention as above provided, in which event subsequent acceptance by the ENGINEER in writing shall be authority for the change or changes proposed in the submittal.

6. If corrections are required, the CONTRACTOR shall make the corrections required by the ENGINEER and resubmit the same number of corrected copies to the ENGINEER as indicated above. The CONTRACTOR shall direct specific attention in writing or, on resubmitted submittals to revisions other than the corrections requested on previous submissions. The ENGINEER will return, to the CONTRACTOR, copies of the resubmitted submittal in the same manner and number as before.

7. Submittals and shop drawings shall give complete information necessary for the fabrication and installation of all the materials and equipment needed to complete the work for this project. Manufacturer's standard details, catalogues, advertising literature, etc., shall not necessarily constitute all of the shop drawings required for any unit or facility. Additional shop details designed for the particular project shall be furnished when required by the ENGINEER.

8. The ENGINEER'S review of and placement of Shop Drawings Review Stamp on any shop drawing is understood to be an acceptance of the character of the details and not a check of any dimension or quantity and will not relieve the CONTRACTOR from responsibility for errors of any sort in shop drawings data or schedules, whether or not such errors are found by the ENGINEER in his review of such details.

9. The ENGINEER'S review of and placement of Shop Drawing Review stamp on any shop drawing will not relieve the CONTRACTOR of responsibility for consequences due to deviations from the Contract Documents unless the CONTRACTOR has called attention to such deviations in writing.

10. No change will be made in any drawing after it has been reviewed except by the consent or direction of the ENGINEER in writing.

11. Submittal transmittal forms provided by the ENGINEER shall accompany each and every submittal.

    A separate form shall be used for each specific item, class of material, equipment, and items specified in separate, discrete sections, for which the submittal is required. Submittals for various items shall be made with a single form when the items taken together constitute a manufacturer's package or are so functionally related that expediency indicates checking or review of the group or package as whole.

    A unique number, sequentially assigned, shall be noted on the transmittal form accompanying each item submitted. Original submittal numbers shall have the following: "XXX," where "XXX" is the sequential number assigned by the CONTRACTOR. Resubmittals shall have the following format: "XXX-Y," where "XXX" is the originally assigned submittal number and "Y" is sequential letter assigned for resubmittals, (i.e., A, B, and C being the first, second, and third resubmittals, respectively. For example, Submittal 25B is the second resubmittal of submittal 25.

12. If the CONTRACTOR proposes to provide material or equipment, which does not conform to the Specifications and Plans, the CONTRACTOR shall indicate so under "deviations" on the transmittal form accompanying the submittal copies. The CONTRACTOR shall prepare the reason for a change, including cost differential, and shall request a Change Order to cover the deviations.

INFORMATIONAL COPY ONLY - NOT FOR BIDDING PURPOSES

13. Submittals, which do not have all the information required to be submitted, including deviations and the required signatures are not acceptable, and will be returned without review.

1-06.1(5) Contractor's Responsibility

By approving and submitting submittals, shop drawing, and samples, the CONTRACTOR thereby represents that he has determined and verified all field measurements, field construction criteria, materials, catalog numbers and similar data, or will do so, and that he has checked and coordinated each submittal with the requirements of the work and of the Contract Document.

A copy of each approved shop drawing and each approved sample shall be kept in good order by the CONTRACTOR at the job site and shall be available to the OWNER.

The CONTRACTOR shall be responsible for coordination of submittals among the related crafts and Subcontractors.

Two (2) submittals of each item requiring samples and/or shop drawings will be reviewed by the ENGINEER in the regular course of the Contract. However, all subsequent reviews of the same item over two (2) will be reviewed at the expense of the CONTRACTOR unless the right to an additional review without charge was previously approved in writing by the ENGINEER. CONTRACTOR will be billed by the OWNER for all costs incurred by the OWNER in such review, including but not limited to the ENGINEER'S fees.

1-07 LEGAL RELATIONS AND RESPONSIBILITY TO THE PUBLIC

1-07.1 LAWS TO BE OBSERVED

Section 1-07.1 is supplemented with the following:

1-07.1(1) Prevention of Environmental Pollution and Preservation of Public Natural Resources

The CONTRACTOR shall comply with the following environmental provisions, which are made as part of the contract documents. A copy of the environmental provisions is available to the CONTRACTOR at the Public Works' office.

If the CONTRACTOR'S operations involve work outside the areas covered by the following environmental provisions, the CONTRACTOR shall advise the OWNER and request a list of all additional environmental provisions covering the area involved. A copy of all additional environmental provisions is also available to the CONTRACTOR at the Public Works' office.

1. Grant County Clean Air Authority Regulation 1.
2. Grant County Health District Ordinance No. 1.
3. Grant County Ordinance No. 604495.

1-07.1(2) Grant County Standard Spill Prevention Control and Countermeasure Plan

This plan outlines requirements for construction operations on County property. The CONTRACTOR is required to submit a site-specific spill prevention control and countermeasure plan as outlined below.

INFORMATIONAL COPY ONLY - NOT FOR BIDDING PURPOSES

1-07.1(2)A Spill Prevention, Control, and Countermeasures

Description

This work shall consist of preparing a Spill Prevention, Control, and Countermeasures Plan (SPCCP) for the construction site and a site specific plan for the crushing site and preparing for implementation of the plans. This preparation includes building any containment areas for fuel storage, berms, or earthwork necessary to facilitate spill prevention shown in the SPCCPs submitted by the CONTRACTOR as per these specifications.

SPCCP Requirements

The CONTRACTOR shall be responsible for the preparation of a SPCCP to encompass all construction activities and is to be used for the duration of the project. The SPCCP shall be submitted to the ENGINEER prior to the commencement of any construction activities. The CONTRACTOR shall maintain a copy of the SPCCP with any updates at the work site.

The SPCCP shall identify construction-planning elements and recognize potential spill sources at the site. The SPCCP shall outline responsive actions in the event of a spill or release and shall identify notification and reporting procedures. The SPCCP shall also outline CONTRACTOR management elements such as personnel responsibilities, project site security, site inspections and training.

The SPCCP shall outline what measures the CONTRACTOR shall take to prevent the release or spread of the following:

1. Any hazardous material* found on site and encountered during construction but not identified in contract documents.
2. Any hazardous materials* that the CONTRACTOR stores, uses, or generates on the construction site during construction activities. These items include, but are not limited to, gasoline, oils and chemicals.

   Note: *Hazardous material, as referred to within this specification, is defined in RCW 70.105.010 under "hazardous substance."

The SPCCP shall also address, at a minimum, the following project-specific information:

1. Introduction, SPCCP Elements, Site Information, Management Approval, Site Description, Planning and Recognition, Spill Prevention and Containment, Spill Response, Reporting, Program Management, and Attachments to include:
   a. Emergency Action Plan
   b. Site Plan
   c. Inspection and Incident Report Forms

Implementation Requirements

In the event that hazardous material is encountered during the course of the work, regardless of whether or not the material is shown in the Plans, the implementation of the CONTRACTOR'S SPCCP shall be included in the scope of the contract and shall be carried out by the CONTRACTOR.

The CONTRACTOR shall maintain, at the job site, the applicable equipment and material designated in the SPCCP.

INFORMATIONAL COPY ONLY - NOT FOR BIDDING PURPOSES

1-07.1(2)B Measurement

All costs involved in the activities for the Spill Prevention, Control and Countermeasure requirements shall not be measured.

1-07.1(2)C Payment

All costs involved in the activities, the Spill Prevention, Control & Countermeasures plan shall be considered incidental and shall be included in the other bid items. The cost shall include costs for all labor, equipment, material & overhead costs associated with the preparation of the construction site's SPCC Plan requirements, as determined in the CONTRACTOR'S Plan, (i.e. building berms, fuel containment areas, etc.) & any coordination and/or preparation needed prior to implementation of the SPCC Plan if a spill occurs.

If the Contracting Agency is responsible for the cost of response, containment and any cleanup then payment shall be made through existing contract items or an Equitable Adjustment in accordance with Section 1-09.4. Assignment of responsibility for payment shall be as defined elsewhere in the Contract.

If the spill is due to the CONTRACTOR'S operations, equipment failure or negligence nothing in this section shall be construed as relieving the CONTRACTOR of responsibility for damage and all cost of response, containment and any cleanup shall be borne by the CONTRACTOR.

1-07.1(3) Additional Permits and Requirements that Pertain to Landfill Operations

Water Use Permits. The CONTRACTOR shall supply the Agency with copies of applicable water use permit(s) for their water source. All costs associated with the acquisition and use of any water source shall be considered incidental and shall be included in the other contract bid items. It is a contractual obligation that the CONTRACTOR abides by all the requirements of these permits.

1-07.2 STATE SALES TAX

Section 1-07.2 is supplemented with the following:

> The work on this contract is to be performed upon lands whose ownership obligates the CONTRACTOR to collect State sales tax from the Contracting Agency. The provisions of Section 1-07.2(2) apply.

1-07.6 PERMITS AND LICENSES

Section 1-07.6 is supplemented with the following:

> No hydraulic permits are required for this project unless the CONTRACTOR'S operations use, divert, obstruct, or change the natural flow or bed of any river or stream, or unless any of the waters of the State or materials from gravel or sand bars, or from stream beds.

1-07.9 WAGES

1-07.9(1) General

Section 1-07.9(1) is supplemented with the following:

> This contract is subject to the minimum prevailing wage requirements of RCW 39.12 and to RCW 49.28 (as amended or supplemented). This project does not require the application of Federal wage laws and rules. A copy of the Washington State current prevailing wage rates is supplied in Attachment B for convenience. All other requirements of Section 1-07.9 apply.

INFORMATIONAL COPY ONLY - NOT FOR BIDDING PURPOSES

The following new paragraph is inserted to follow the sixth paragraph:

The Contractor shall ensure that any firm (Supplier, Manufacturer, or Fabricator) that falls under the provisions of RCW 39.12 because of the definition "Contractor" in WAC 296-127-010, complies with all the requirements of RCW 39.12.

1-07.13 CONTRACTOR'S RESPONSIBILITY FOR WORK

1-07.13(4) Repair of Damage

Section 1-07.13(4) is supplemented with the following:

Underground utilities, groundwater monitoring wells, and landfill gas probes are located on-site. The CONTRACTOR shall locate and protect underground utilities, wells, and probes, and shall take all necessary precautions to avoid disturbing any underground utilities, well and probe casing on or off the landfill. The CONTRACTOR shall not encroach within five (5) feet of any monitoring well or probe without approval of the ENGINEER. If the ENGINEER determines that a well or probe casing has been disturbed, the CONTRACTOR shall be responsible for all damages and repair to the satisfaction of the OWNER and regulatory agencies. This could include replacement of a well or probe, which could result in a cost of $50,000 or more for replacement.

1-07.16 PROTECTION AND RESTORATION OF PROPERTY

1-07.16(1) Private/Public Property

Section 1-07.16(1) is supplemented with the following:

It is national and state policy to preserve, for public use, historical and prehistorical objects such as ruins, sites, buildings, artifacts, fossils, or other objects of antiquity that may have significance from a historical or scientific standpoint.

Archaeological or historical objects which may be encountered by the CONTRACTOR shall not be further disturbed. The CONTRACTOR shall immediately notify the OWNER of any such finds.

The OWNER will contact the archaeologist who will determine if the material is to be salvaged. The CONTRACTOR may be required to stop work in the vicinity of the discovery until such determination is made. If the archaeologist determines that the material is to be salvaged, the OWNER may require the CONTRACTOR to stop work in the vicinity of the discovery until the salvage is accomplished.

Loss of time suffered by the CONTRACTOR due to resulting delays will be adjusted in accordance with Section 1-08.8.

1-07.17 UTILITIES AND SIMILAR FACILITIES

Section 1-07.17 is supplemented with the following:

The existence and approximate location of underground utilities or similar facilities are indicated in the Plans insofar as it is possible to do so. The existence and approximate locations will be determined by a search of available records; however, additional utilities may be encountered and the locations of the utilities indicated therein may vary from the actual locations of the utilities as indicated. The CONTRACTOR shall take the necessary precautionary measures to protect the existing utilities and structures indicated and any of the utilities or structures, which may be encountered at the site during construction. Failure of the OWNER to show the existence of subsurface objects or facilities on the plans shall not relieve the CONTRACTOR from the

INFORMATIONAL COPY ONLY NOT FOR BIDDING PURPOSES

responsibility to make an independent surface check of the project site, nor relieve the CONTRACTOR from all liability for damages resulting from the CONTRACTOR'S operations.

The utilities in Grant County work together in a Council to help prevent accidents and damages to underground facilities. One telephone call to 1-800-424-5555, 48 hours prior to digging (excluding weekends and holidays) will relay a message to these utilities, as necessary. These agencies will give assistance in the location of the various utilities, but such assistance shall not relieve the CONTRACTOR from the responsibility for damage incurred, except where the installations are not located as closely as is normally possible with an electronic pipe locator or meet the additional exception criteria listed herein.

The CONTRACTOR is alerted to the existence of Chapter 19.122 RCW, a law relating to underground utilities. Any cost to the CONTRACTOR incurred as a result of this law shall be at the CONTRACTOR'S expense. No excavation shall begin until all known facilities in the vicinity of the excavation area have been located and marked.

Existing underground utilities, whether public or private, which are damaged by the CONTRACTOR, will be repaired by the utility OWNER. The CONTRACTOR shall be liable for all costs resulting from the damage to a utility if:

1. The utility system is in a standard location adopted by the local jurisdiction, or is indicated in the Plans, and the actual location of any portion of the utility is within 24 inches horizontally of the standard location, or the location indicated on the Plans, or
2. The utility has field located and marked its facilities and the actual location of any portion of the utility is within 24 inches horizontally of said location mark, or
3. The utility system is visible or has become visible or can be reasonably assumed to exist at the location due to visible evidence prior to the damage, or
4. The CONTRACTOR has failed to provide the required notification to the utility OWNER of the utility that has been damaged.

The depth of the utility, if indicated, is for the CONTRACTOR'S convenience only, and the CONTRACTOR'S responsibility for damage as specified above shall not be altered due to the actual depth being different or other than that indicated on the plans.

The CONTRACTOR shall notify the proper utility immediately upon breakage or damage to any utility line or appurtenance, or the interruption of their service. He shall notify the proper utility when his operations may affect the service or cause damage to the utility involved.

Any loss of time suffered by the CONTRACTOR due to delay and removal or relocation of any utility or other facility by others may be adjusted in accordance with Section 1-08.8 permitting extensions of time.

The following addresses and telephone numbers of utility companies known or suspected of having facilities within the project limits are supplied for the CONTRACTOR'S convenience:

Grant County PUD No.2, 30 C St. S.W., Ephrata, WA 98823	(509) 754-3451
U.S. West Co., 324 S. Ash, Moses Lake, WA 98837	(509) 765-2614
General Tel. Co., 320 E. Penny Rd., Wenatchee, WA 98801	(509) 662-9203
CenturyTel (formerly PTI Communications)	(800) 550-8110
Sprint Telephone, P.O. Box 360, Sunnyside, WA 98944	(800) 488-4214

INFORMATIONAL COPY ONLY - NOT FOR BIDDING PURPOSES

1-07.18 PUBLIC LIABILITY AND PROPERTY DAMAGE INSURANCE

Section 1-07.18 is supplemented with the following:

"Names the Contracting Agency as an additional insured," to read "Names the OWNER and Parametrix, Inc. as an additional insured."

1-07.23 PUBLIC CONVENIENCE AND SAFETY

Section 1-07.23 is supplemented with the following:

Ephrata Landfill will be open to the public and solid waste haulers during construction. The CONTRACTOR shall provide for traffic control during this project when the CONTRACTOR'S construction activities impact landfill operations as determined by the OWNER. This work will be considered incidental to the project, and no direct payment will be made for traffic control.

1-07.28 HEALTH AND SAFETY PLAN

1-07.28(1) Present Site Characterization

The Landfill received mixed municipal solid waste. The exact nature of materials and wastes disposed of at the Landfill is unknown. The possibility exists of encountering gases, liquids, and/or other substances during the work that may be potentially hazardous to the safety and health of personnel, especially those working in the vicinity of open excavations and pipes venting gases. Since other substances and gases may be present and may be found during work pursuant to the Contract, the CONTRACTOR shall consider the possibility of encountering other substances in preparing the Site Safety and Health Program.

The landfill development project will require working on and excavating at the north edge. This will include grading the landfill surface, extending leachate collection piping from the existing collection piping, connecting to existing landfill gas trenches and flare facility, condensate piping, and excavation of the anchor trench for the geomembrane. The CONTRACTOR shall be aware of the potential for landfill gas, landfill gas condensate, and leachate to be present at all locations.

The CONTRACTOR shall provide all personnel working on the project with required orientation and training on the potential hazards anticipated and the appropriate use of safety equipment.

1-07.28(2) Contractor's Responsibility for Health and Safety for Hazardous Waste Operations

Due to the nature of the Ephrata Landfill, the CONTRACTOR is cautioned that there is a possibility of encountering potentially hazardous gases, liquids, and other substances that may be harmful to personal health and safety while performing elements of the work. The CONTRACTOR shall do whatever is necessary for health and safety and be solely and completely responsible for conditions on the site for this project, including safety of all persons, employees, and property during the contract period. This requirement shall apply continuously and not be limited to working hours.

For all work conducted for this project at the Ephrata Landfill, the CONTRACTOR shall ensure compliance with all requirements of the Federal Occupational Health and Safety Act of 1970 (OSHA), including OSHA 29 CFR Part 1910.120 Hazardous Waste Operations and Emergency response, Final Rule, and with the Washington Industrial Health and Safety Act of 1973 (WISHA), WAC 296-62 Part P, as they apply to health and safety provisions for hazardous waste operations, and all other applicable federal, state, county, and local laws, ordinances, codes, the requirements set forth herein, and any regulations that may be specified in other parts of this Contract.

The CONTRACTOR shall at all times provide proper facilities for safe access to the work by authorized persons. The CONTRACTOR shall develop and maintain, for the duration of this contract, a site-specific health and safety plan that will effectively incorporate and implement all required safety provisions.

INFORMATIONAL COPY ONLY - NOT FOR BIDDING PURPOSES

A Health and Safety Plan shall be submitted by the CONTRACTOR within 14 days after award of the Contract. The Health and Safety Plan shall be signed by a certified industrial hygienist registered in the State of Washington. The ENGINEER will review the CONTRACTOR'S Health and Safety Plan, but this is not intended as approval of the adequacy of the CONTRACTOR'S safety supervisor, the safety program, or any safety measures taken in, on, or near the work areas.

The Site Health and Safety Plan shall, at a minimum, include the following considerations:

1. Names of key personnel and alternates responsible for site health and safety and appointment of a Site Health and Safety Officer.
2. Health and safety risk analysis for each site task and operation.
3. Employee training assignments.
4. Personal protective equipment to be used by employees for each of the site tasks and operations being conducted.
5. Medical surveillance requirements.
6. Frequency and types of air monitoring, personnel monitoring, and environmental sampling techniques and instrumentation to be used. Methods of maintenance and calibration of monitoring and sampling equipment to be used.
7. Site control measures.
8. Decontamination procedures.
9. Site standard operating procedures.
10. Emergency response plan including the necessary personal protective equipment and other equipment.
11. Confined space entry procedures.
12. Spill containment program.
13. Contact with methane, leachate, and lfg condensate.

In the event the Health and Safety Plan is found to be inadequate, as determined by any regulatory agency of jurisdiction, to protect the employees and the public, the Plan shall be modified to meet the requirements of those regulatory agencies.

1-07.28(3) Measurement

No specific unit measurement shall apply to the lump sum item for "Site Health and Safety."

1-07.28(4) Payment

The lump sum contract price for "Site Health and Safety" shall include all costs for the work required to meet the requirements specified in Section 1-07.28 for Phase 3.

1-07.29 EMERGENCY PHONE NUMBERS

The CONTRACTOR shall supply to the OWNER the names and phone numbers of responsible personnel representing the CONTRACTOR and each subcontractor for the purpose of contacting these individuals in the event of an emergency.

INFORMATIONAL COPY ONLY - NOT FOR BIDDING PURPOSES

1-08 PROSECUTION AND PROGRESS

1-08.0 PRELIMINARY MATTERS

1-08.0(1) Preconstruction Conference

Section 1-08.0(1) is revised as follows:

The OWNER will provide the CONTRACTOR with five (5) copies of the Contract Documents. A preconstruction conference may be held within ten (10) days after the contract award.

1-08.0(2) Hours of Work

Section 1-08.0(2) is supplemented with the following:

Normal hours of operation for the landfill are:

Monday through Friday – 7:30 a.m. to 3:00 p.m.

Saturday – 10:00 a.m. to 3:00 p.m.

Sunday – Closed

The CONTRACTOR may work additional hours at his option provided no noise limitations are violated. The CONTRACTOR'S additional hours may be limited to the hours between 7:00 a.m. and 7:00 p.m. The CONTRACTOR must coordinate his construction schedule and access with the landfill manager and accept responsibility for securing and protecting the property if he opts to work other than the normal operating hours.

1-08.0(5) Weekly Construction Meetings

The following are requested to attend the weekly construction meetings:

1. County Representatives: Project ENGINEER(s), Public Works Construction Inspector(s), ENGINEER (if required).

2. CONTRACTOR Representatives: Project Manager (Superintendent), Major Subcontractors (geosynthetic, etc.) when working on-site, and Project Foreman.

3. Design and CQA ENGINEER: Project Design ENGINEER, CQA ENGINEER, additional CQA personnel, and project manager (as requested).

4. Other Interested Parties: Health Department, and Department of Ecology (attendance not mandatory).

5. The agenda will vary with the work completed and upcoming, but will generally follow this format: Schedule, Upcoming Work, Problems encountered/corrected, Testing, Regulatory and Environmental Issues, and Measurement and Payment.

6. The schedule shall be updated weekly for the construction meeting. Any changes to the CONTRACTOR'S plans shall be given to the County at these meetings.

INFORMATIONAL COPY ONLY - NOT FOR BIDDING PURPOSES

1-08.3 PROGRESS SCHEDULE

Section 1-08.3 is supplemented with the following:

The CONTRACTOR shall submit a construction schedule summarizing planned construction activities, noting sequential interrelationships, milestones, durations, and terminations in accordance with Section 1-08.5.

The schedule shall be developed by a critical path, bar chart, or similar type method.

1-08.4 PROSECUTION OF THE WORK

Amend the first sentence to read:

"The Contractor shall begin Work within ten (10) calendar days from the date of execution of the Contract (Notice to Proceed) by the Owner, unless otherwise approved in writing."

1-08.5 TIME FOR COMPLETION

Section 1-08.5 is replaced with the following:

Upon completion of all work required by the Contract, the ENGINEER pursuant to Section 1-05.11 will advise the CONTRACTOR and OWNER in writing of the date on which such work was substantially completed, taking into account weather delays and other approved time extensions. Such notification of date of completion shall not constitute acceptance of the work by the OWNER (see Section 1-05.12 Final Acceptance).

The work as specified in Section 1-04.3 and on the Plans shall be completed in its entirety within the time frame specified in the Proposal on page LD-3. The Contract time shall commence on the day that the OWNER issues the Notice to Proceed to the CONTRACTOR.

Should the CONTRACTOR desire to perform work on any Saturday, Sunday, or Holiday during the life of this contract, the CONTRACTOR shall request written permission from the OWNER after submitting a new work schedule specifying the exact dates on which the work is to be performed. The OWNER will consider the CONTRACTOR'S request and may either approve or deny any or all working dates or shifts contained in the new progress schedule.

No additional compensation shall be given the CONTRACTOR for any delays and costs incurred because of this provision. All costs incurred shall be considered incidental to and included in other applicable contract items.

1-08.9 LIQUIDATED DAMAGES

Section 1-08.9 first paragraph is replaced with the following:

Time is of the essence for this Contract. Any delay in the prosecution of the work will inconvenience and be expensive to the OWNER. The costs to the OWNER in the administration of the Contract, including engineering, inspection, and supervision will be increased by such delays.

As liquidated damages to the OWNER caused by the failure to complete construction of this Contract within the stipulated Times for Completion, the CONTRACTOR agrees to pay and authorizes and directs the OWNER to deduct from any money due or coming due to the CONTRACTOR the sums calculated per the liquidated damages formula in Section 1-08.9 of the Standard Specifications.

INFORMATIONAL COPY ONLY - NOT FOR BIDDING PURPOSES

1-09 MEASUREMENT AND PAYMENT

1-09.1 MEASUREMENT OF QUANTITIES

Section 1-09.1 is supplemented with the following:

The CONTRACTOR shall provide all surveys for pay items measured by the linear foot, cubic yard, or square yard. Linear foot measurement will be along the invert pipe. Cubic yard measurement for standard embankments and excavation will be by cross sectional survey. Square yard measurements for the GCL, geomembrane, and cushion layer; and cubic yard measurements for the bedding layer, side slope layer, and leachate collection layer will be by horizontal (plan) area. Standard square yard measurements will be by horizontal (plan) area. All surveys for pay items will be by a professional land surveyor licensed in the State of Washington.

The CONTRACTOR shall submit a comprehensive breakdown of items constituting each lump sum price in a supplemental schedule of unit prices and shall show the value assigned to each item, including an allowance for overhead and profit. Submittal shall be within ten (10) days of receipt of Notice to Proceed (no later than the preconstruction conference in accordance with Section 1-08.1(1). Upon acceptance of the supplemental schedule of unit prices by the ENGINEER, the supplemental schedule of unit prices shall be used as the basis for all requests for payment of lump sum items except for mobilization.

1-09.9 PAYMENTS

Section 1-09.9 is supplemented with the following:

The cutoff day for quantity measurements will be the 25th of each month. If the 25th falls on a weekend or holiday, the Friday previous will be the cutoff day.

END OF DIVISION 1

INFORMATIONAL COPY ONLY - NOT FOR BIDDING PURPOSES

INFORMATIONAL COPY ONLY - NOT FOR BIDDING PURPOSES

DIVISION 2
EARTHWORK

2-03 EXCAVATION AND EMBANKMENT

2-03.1 DESCRIPTION

Section 2-03.1 is replaced with the following:

The work described in this Section, regardless of the nature or type of the materials encountered, includes excavating and constructing berms, road embankment; and grading the landfill subgrade, roadway, filling cracks, fissures, holes, overexcavated areas, and other void spaces during subgrade preparation, placement and compaction of bedding layer, embankments, and subgrade materials, all haul, and stockpile of materials. These activities may be performed in making cuts, embankments, slopes, ditches, berms, performing grading, and in completing related work. The work shall conform as shown on the Plans and as directed by the ENGINEER.

This work includes the following:

1. Excavation and embankment for constructing the subgrade for the landfill Phase 3 Development area and stockpiling excavated materials in designated locations.
2. Placement of the GCL bedding layer.
3. Placement of the composite geosynthetic liner system: GCL, HDPE geomembrane, and geotextile cushion layer for the landfill.
4. Placement of the leachate collection layer.
5. Construction of the perimeter roadway, tipping pad area and access roadway, and ditches.
6. Installation of buried landfill gas collection piping.
7. Grading of the landfill perimeter for the placement of the landfill gas lateral pipe.
8. Excavation to verify the condition of the existing landfill gas condensate piping between the existing collection manifold to the condensate manhole at the flare facility. After work is complete, backfilling the pipe and area in accordance with these Specifications.
9. Excavation and compaction for the blower concrete pad and electrical.

All work described herein shall conform to the alignment and grade as shown on the Plans or as established by the ENGINEER. The CONTRACTOR shall maintain a tolerance in accordance with Section 1-05.5(2) of these Specifications. If CONTRACTOR overexcavates beyond this tolerance the ENGINEER may require replacing in accordance with 2-03.3(14)C Method B. On-site and off-site haul routes will be established, maintained, and restored by the CONTRACTOR.

2-03.2 MATERIALS

Materials shall conform to the following sections of these Specifications:

- Embankment 9-38.1
- Leachate Collection Layer 9-38.2
- GCL Bedding Layer 9-38.3
- Rock Armor 9-38.4

INFORMATIONAL COPY ONLY - NOT FOR BIDDING PURPOSES

- Crushed Top Course 9-38.5
- Pipe Zone Bedding 9-38.6
- Concrete 6-02

2-03.2(1) Submittals (NEW SECTION)

The CONTRACTOR shall submit the following information in accordance with the specified sections within 10 days after the Notice to Proceed is received, unless otherwise specified.

1. Sieve analysis and construction quality assurance testing on the GCL bedding and leachate collection layer if provided from an offsite borrow source.

2-03.3 CONSTRUCTION REQUIREMENTS

2-03.3(7) Disposal of Surplus Material

2-03.3(7)A General

Section 2-03.3(7)A is replaced with the following:

Surplus excavation shall be hauled and placed in the designated stockpile sites as directed by the OWNER and described in Section 3-02.

Any and all refuse or contaminated soil encounter during construction shall be hauled and placed in the disposal area as directed by the OWNER. The CONTRACTOR will assume no charge to dispose of refuse in the on-site disposal area.

2-03.3(14) Embankment Construction

2-03.3(14)B Earth Embankment Construction

Section 2-03.3(14)B is supplemented with the following:

Embankment and GCL bedding layer shall be placed in layers of uniform thickness in accordance with Method C, Section 2-03.3(14)C.

The subgrade soils below the embankment and GCL bedding layer shall be compacted to a smooth, firm, and stable condition that allows for compaction of overlying layers.

2-03.3(14)C Compacting Earth Embankments

Section 2-03.3(14)C, second paragraph under Method B, first sentence is replaced with the following:

In the top two feet, layers shall not exceed 12 inches in depth after compaction and shall be smooth and unyielding.

2-03.3(14)D Compaction and Moisture Control Tests

Section 2-03.3(14)D is replaced with the following:

Maximum density and optimum moisture content for granular soils will be as determined by ASTM D 1557. Compaction and moisture control testing for the GCL bedding layer shall be as described in Section 2-03.3(14)K. The Contractor shall collect and test two (2) representative samples of the soils for maximum density and optimum moisture, as directed by the Engineer.

INFORMATIONAL COPY ONLY - NOT FOR BIDDING PURPOSES

2-03.3(14)N GCL Bedding Layer (NEW SECTION)

The GCL bedding layer shall conform to Section 9-38.3. The GCL bedding layer shall be placed in accordance with Section 2-03.3(14)B. Compaction shall be in accordance with Section 2-03.3(14)C.

The bedding layer shall be smooth rolled by a compactor, and the surface shall be maintained in the specified condition and moisten-condition until the GCL is installed; therefore, **the compaction equipment shall remain onsite until the last of the GCL material is installed**. The bedding layer shall be firm and unyielding with no abrupt elevation changes, voids, cracks, or standing water. The CONTRACTOR may be required to use the "yo-yo" method (i.e., using block and cable attached to a dozer while a backhoe pull the compactor up and down the slope) to compact the bedding layer on the landfill's sideslope. Due to the nature of the bedding layer and experience from previous development constructions, the bedding layer would ripple under the force of the compactor especially near the toe of slope using normal compaction practices. The bedding layer shall have no ruts or ridges greater than 1/2-inch; therefore, tracking of the bedding layer with excavator or dozer will not be allowed for compaction. The thickness of the bedding layer placed shall be no less than 2 inches thick and as necessary to meet the requirements for bedding layer as shown on the Drawings or as directed by the ENGINEER.

The bedding layer surface shall be smooth and free of vegetation, sharp-edged rocks, stones, sticks, debris, and other foreign matter that could contact the overlying geomembrane. The bedding layer shall be rolled with a smooth-drum compactor of sufficient weight to remove any wheel ruts, footprints, or other abrupt grade changes prior to placing the overlying geomembrane. All protrusions extending or protruding more than 1/2-inch from the bedding layer shall be removed, crushed, or pushed into the surface with a smooth-drum compactor.

2-03.3(14)O Leachate Collection Layer

The leachate collection layer shall conform to Section 9-38.2. The leachate collection layer shall be placed in one 18-inch-thick layer over the geotextile cushion layer for the bottom and over the geomembrane for the sideslopes as shown on the Plans to provide a firm, stable condition able to support placement of the initial solid waste layer. Caution shall be taken to assure that the underlying geosynthetics are not damaged during placement of the leachate collection layer. The Contractor shall exercise caution and shall alter the placement method if damage to the geosynthetics occurs or is imminent. Placement shall be with low ground pressure tracked equipment as approved by the Engineer. The equipment shall meet the manufacturer's standard for low ground pressure.

The leachate collection layer shall not be dumped directly onto the geosynthetics or spread by pushing it downhill. The leachate collection layer shall be dumped from the hauling vehicle onto already placed material and then bladed into place, across or up the slope. Dumping of limited quantities of leachate collection layer in front of the bladed soil, from front-end loaders or backhoes at low heights, to eliminate folds in the geosynthetics may be performed if approved by the Engineer. The dozer shall not be allowed to "crowd" the blade into the liner cover layer and drag (back-blade) the soil over the surface of the geosynthetic materials.

Leachate collection layer shall not be placed until the underlying geosynthetics have been surveyed and approved for covering by the Contractor's Liner Installer and the ENGINEER. **Leachate collection layer shall be placed on the geosynthetics at the same temperature as when the geomembrane was installed**. This may require the CONTRACTOR to stockpile leachate collection layer material during the day, setting fixing berms before ambient temperatures drop, and spreading the soil in the morning or at night when temperatures are cool and geomembrane is laying flat.

INFORMATIONAL COPY ONLY - NOT FOR BIDDING PURPOSES

The CONTRACTOR shall not cover over wrinkles that could fold in the opinion of the CQA ENGINEER. If the wrinkle does not dissipate upon cooling, then the CONTRACTOR shall cut the geomembrane, lay flat the wrinkle, and repair in accordance with Section 8-05.

No hauling or other equipment shall operate on or above the geosynthetic materials on less than three (3) feet of soil, unless approved by the ENGINEER. No sharp turns or sudden turning of tires or tracks over the liner is allowed. Any areas where sharp turns, quick stops, driving too fast, or improper driving onto thin sections of soil cover shall be uncovered by the CONTRACTOR and repaired if required by the ENGINEER.

2-03.3(14)P Oversize Rock Disposal

Oversize rock shall be disposed of at the on-site location designated by the OWNER. Granular soil shall be compacted around the oversized rock to remove all voids. The CONTRACTOR shall neatly dress the oversize rock disposal area prior to demobilization.

2-03.4 MEASUREMENT

Section 2-03.4 is replaced with the following:

1. "Excavation and Haul", per cubic yard.

   Material will be measured by 50-foot cross sections, or other approved surveying methods, within the excavation area shown on the Plans. The material quantity will be based by a neat line quantity comparing the CONTRACTOR'S initial and final survey information between the existing grades and final proposed constructed grades. The locations of the cross sections will be mutually agreed to with the Owner.

2. "Embankment Compaction", per cubic yard.

   Embankment compaction and road embankment materials will be measured either by 50-foot cross sections or other approved surveying methods within the landfill area shown on the Plans. The material quantity will be based by a neat line quantity comparing the initial and final survey information. The locations of the cross sections will be mutually agreed to with the Owner.

3. "GCL Bedding Layer", per cubic yard.

   Material will be measured by the neat line depth shown on the Plans and the horizontal area placed within limits of the liner system shown on the Plans.

4. "Leachate Collection Layer", per cubic yard.

   Material will be measured by the neat line depth shown on the Plans and the horizontal area placed within the limits of the liner system shown on the Plans and includes the material for the berms.

5. "Rock Armor from Stockpile", per square yard.

   Material will be measured by the neat line depth shown on the Plans and the horizontal area placed within the limits as shown on the Plans.

2-03.5 PAYMENT

Section 2-03.5 is replaced with the following:

1. "Excavation and Haul", per cubic yard.

   The unit contract price per cubic yard shall be full compensation for all materials, labor, tools, equipment, and incidentals required to construct an approved subgrade for the GCL bedding layer

INFORMATIONAL COPY ONLY - NOT FOR BIDDING PURPOSES

including surveying and staking, excavation, loading, hauling, stockpiling or otherwise removing and disposing of soils and a minor amount of refuse to the lines and grades shown on the Plans.

2. "Embankment Compaction", per cubic yard.

   The unit contract price per cubic yard shall be full compensation for all costs incurred for all materials, labor, tools, equipment, and incidentals required to construct an approved subgrade including surveying and staking, loading, hauling, placing and compacting soils to the lines and grades shown on the Plans. This work shall also include removal of material not suitable for embankment from the surface of any site and costs for constructing, maintaining, and restoring haul roads associated with access to the construction areas.

3. "GCL Bedding Layer", per cubic yard.

   The unit contract price per cubic yard shall be full compensation for all materials, labor, screening, tools, equipment, and incidentals required to supply, haul, stockpile, remove deleterious substances, place, compact, test, and shape the GCL bedding layer to the lines and grades shown on the Plans.

4. "Leachate Collection Layer", per cubic yard.

   The unit contract price per cubic yard shall be full compensation for all materials, labor, screening, tools, equipment, and incidentals required to supply, haul, stockpile, remove deleterious substances, place and shape the leachate collection cover layer ready for placement of waste.

5. "Rock Armor from Stockpile", per square yard.

   The unit contract price per square yard shall be full compensation for all materials, labor, tools, equipment, and incidentals required to furnish, haul, remove deleterious substances, place and shape the rock armor ready for placement within the perimeter ditch.

2-06 SUBGRADE PREPARATION

2-06.1 DESCRIPTION

Section 2-06.1 is supplemented with the following:

This work also consists of preparing the GCL bedding layer for the composite liner.

2-06.3 CONSTRUCTION REQUIREMENTS

2-06.3(3) Subgrade for Composite Liner

The CONTRACTOR shall perform all excavation and embankment construction necessary to provide the prepared subgrade for placement of GCL bedding layer. The GCL bedding layer shall be to the lines and grades shown on the Plans. Soft or otherwise unsatisfactory material shall be removed and replaced with satisfactory excavated material or other approved material as directed by the ENGINEER. Low areas resulting from removal of unsatisfactory material shall be brought up to required grade with satisfactory materials, and the entire prepared subgrade shall be shaped and compacted as specified. Before the composite liner is installed, the CONTRACTOR shall:

1. Remove from the prepared subgrade prior to installing the composite liner all brush, weeds, vegetation, grass, and other debris.
2. Dispose of all debris as directed by the ENGINEER.

INFORMATIONAL COPY ONLY - NOT FOR BIDDING PURPOSES

3. Maintain the prepared subgrade in the required condition until the bedding layer is placed.

2-06.5 MEASUREMENT AND PAYMENT

The subgrade for GCL bedding layer will not be measured for payment. This work will be considered incidental under this contract and no additional direct payment shall be made.

2-07 WATERING

2-07.3 CONSTRUCTION REQUIREMENTS

Section 2-07.3 is supplemented with the following:

The CONTRACTOR shall use water for bedding layer placement and dust control, as needed, at all times during construction, in the staging area and along haul roads within the facility to ensure activities do not produce visible emissions above 10 percent opacity in accordance with WAC 173-400. The water shall be of sufficient quantity and quality to perform the construction or as directed by the ENGINEER. Water for this project shall be purchased by the CONTRACTOR at the CONTRACTOR'S sole expense.

2-07.4 MEASUREMENT

Section 2-07.4 is replaced with the following:

No measurement will be made for watering.

2-07.5 PAYMENT

Section 2-07.5 is replaced with the following:

No payment will be made for watering.

2-10 DITCH EXCAVATION

2-10.3 CONSTRUCTION REQUIREMENTS

Section 2-10.3 is supplemented with the following:

Soil excavated from the construction of perimeter surface water ditches shall be stockpiled in the excavation stockpile, or used for embankment material, as directed by the ENGINEER.

2-10.5 PAYMENT

Section 2-10.5 is replaced with the following:

Ditch construction shall be considered incidental to other items in this Contract and no additional payment will be made.

INFORMATIONAL COPY ONLY - NOT FOR BIDDING PURPOSES

2-11 TRIMMING AND CLEANUP

2-11.1 DESCRIPTION

Supplement this section with the following:

This work also extends to the development area, stockpile areas, staging areas, storage areas, haul routes, and other areas affected by the Contractor's operations.

2-11.3 CONSTRUCTION REQUIREMENTS

Delete this section and replace it with the following:

The Contractor shall, as directed by the Engineer, remove from the Owner's property and from all public and private property, at the Contractor's own expense, all temporary structures, rubbish, and waste materials resulting from the Contractor's operations. Waste materials meeting the acceptance criteria for the Ephrata Landfill may be disposed of in the landfill if the waste is from work on this project, at no cost to the Contractor.

Throughout the period of construction, the Contractor shall keep the site clean and free from all rubbish and debris and shall promptly clean up all or any portion of the site when notified to do so by the Engineer. Care shall be taken to prevent spillage on the roads over which hauling is done, and any such spillage or debris deposited due to Contractor's operations shall immediately be cleaned up. The Contractor shall promptly remove from any parts of the working area all unused materials, surplus earth, and debris. Construction areas shall be left in a clean, neat and acceptable condition at the earliest time following completion of that portion of work.

During all phases of the construction work, the Contractor shall take precautions to abate a dust nuisance or a wind blown sand nuisance, by cleaning up, sprinkling with water, or other means as necessary to accomplish results satisfactory to the Engineer in accordance with Section 2-07.

Upon completion of the work and prior to final inspection, the entire site of operations shall be cleared of equipment, unused materials, and rubbish, so as to present a clean and neat appearance.

2-11.4 MEASUREMENT

No specific unit of measurement shall apply to the lump sum item of trimming and cleanup.

2-11.5 PAYMENT

Payment will be made in accordance with Section 1-04.11, for the following bid item "Trimming and Cleanup", per lump sum.

END OF DIVISION 2

INFORMATIONAL COPY ONLY - NOT FOR BIDDING PURPOSES

INFORMATIONAL COPY ONLY - NOT FOR BIDDING PURPOSES

DIVISION 7
DRAINAGE STRUCTURES, STORM SEWERS, SANITARY SEWERS, WATER MAINS, AND CONDUITS

7-06 LEACHATE COLLECTION SYSTEM (NEW SECTION)

7-06.1 DESCRIPTION

This work consists of extending and installing the leachate collection system and cleanouts located in the development area.

7-06.2 MATERIALS

Materials shall meet the requirements of the following section:

HDPE Pipe and Fittings	9-05.30
Geomembrane	9-37.3
Geotextile Type 2	9-37.4
Leachate Collection Layer	9-38.2

Provide all first quality, new materials, free from defects, and suitable for the intended use and space. Where two or more units of the same class of material are required, provide products of a single manufacturer.

Unless otherwise indicated, provide materials and equipment that are the standard products of manufacturers regularly engaged in the production of such materials and equipment. Provide the manufacturer's latest standard design that conforms to these specifications.

7-06.3 SUBMITTALS

The Contractor shall provide certification that the person(s) butt-fusion and/or electro-fusion welding the HDPE Pipe and fitting has been certified by the manufacturer as capable of welding HDPE Pipe and Fittings.

The Contractor shall provide certification that the pipe materials used meet material specifications.

7-06.4 CONSTRUCTION REQUIREMENTS

7-06.4(1) GENERAL

The leachate collection system collects and transfers leachate from the Phase 1 and 2 development area to the leachate pond via a leachate pump. The leachate collection system is located above the geomembrane as shown on the Plans and shall be comprised of HDPE perforated collection pipe, leachate collection layer, and landfill sump.

The leachate collection system shall be constructed in conformity with the line and grades as shown on the Plans. All pipe grades shall be continuous between grade breaks. The lines and grades shown on the plans may be altered to maintain a minimum grade as shown on the plans. Perforations shall be in accordance with Section 9-05.30(2). All perforated collection pipe shall be installed such that the two rows of perforations are placed face down to the bottom of the landfill and oriented so that each row of perforations is spaced equally and uniform along the pipe.

The pipes shall be installed to conform to Section 7-08.3.

INFORMATIONAL COPY ONLY - NOT FOR BIDDING PURPOSES

7-06.4(2) HDPE PIPE AND FITTINGS

All pipes shall be supplied in the nominal diameter shown on the Plans. Perforated pipe shall be installed where shown on the plans

The interior of all piping shall be free and have no shavings, loose pieces, or sediment contained within the piping.

All solid wall pipe shall have watertight joints unless otherwise specified on the Plans. All joints shall be butt-fusion or properly executed electro-fusion welded. No non-fusion couplers will be acceptable.

Joining pipe by butt fusion or electro-fusion welding shall be conducted according to manufacturer's recommendation. Butt fusion shall be done with equipment recommended by the pipe manufacturer. Care shall be taken to ensure alignment of perforations during welding.

Pipe and joints shall be free from burrs, nicks, gouges deeper than 5 percent of nominal wall thickness, surface cracks, or defects. Pipe shall be open, clean, and free draining upon completion of installation and covering with drain rock.

Pipe shall be stored on flat ground to prevent bowing. Pipe determined by the Engineer to be damaged during storage or installation shall be replaced at the Contractor's expense.

Leachate collection layer shall be placed around the leachate collection pipe as shown on the Plans. Leachate collection layer shall be placed and hand tamped to ensure the material is well consolidated around the bore of the pipe. Leachate collection layer shall be poured into the trench gradually so that tamping operations can be carried out simultaneously with placement. Care shall be taken to ensure pipe is not displaced during placement of drain rock. Any pipe that moves out of alignment due to thermal expansion and contraction shall be realigned prior to placement of drain rock over the pipe. Leachate collection layer around perforated pipe shall be placed with special care around the piping to ensure the underlying geosynthetics are not damaged.

The leachate transfer pipe ends shall be located as directed by the OWNER/ENGINEER. Pipe guides may be required on the downslope pipe edge based on the terrain. Soil backfill as shown on the Plans may be adjusted by the ENGINEER based on actual conditions. Care shall be taken by the CONTRACTOR when install pipe and anchor around the leachate pond as to not damage the liner or electrical.

The HDPE valve upstream of the interim stormwater berm, that runs north-south, and for the leachate transfer system shall be of watertight construction and installed as shown on the Plans with the operator nut in the vertical position. The valve shall be installed in the open position.

7-06.5 MEASUREMENT

The length of leachate collection and leachate cleanout piping shall be the number of linear feet of the completed installation measured along the invert as shown on the Plans and includes the length through elbows, tees, and fittings.

7-06.6 PAYMENT

Payment shall be as follows:

1. "3-inch HDPE Solid Wall Leachate Pipe," and "6-inch HDPE Solid Wall Leachate Pipe," per linear foot.

   The unit contract price per linear foot shall be full compensation for furnishing and installing solid wall HDPE pipe and fittings such as a line-size valves, tees, flange connections, anchoring soil materials, and materials, labor, bedding, testing, and equipment necessary to furnish and install the pipe and fittings, as shown on the Plans.

INFORMATIONAL COPY ONLY - NOT FOR BIDDING PURPOSES

2. "6-inch HDPE Perforated Leachate Pipe", per linear foot.

The unit contract price per linear foot shall be full compensation for furnishing and installing perforated HDPE pipe and fittings such as electro-fusion couplings, wyes, and caps including materials, and connecting new piping to solid wall HDPE piping where shown on the Plans.

7-10 LANDFILL GAS SYSTEM (NEW SECTION)

7-10.1 DESCRIPTION

This work shall consist of the construction of the landfill gas piping, connection to existing horizontal trenches, modifying the existing lfg wellheads, and installing new wellhead connections, as shown on the Plans. Flare facility works consists of the installing a concrete pad, and placing blowers and piping within the pad. The work also involves supplying electrical and controls for the new blowers at the flare facility.

This work shall also consist of verifying the condition of the existing, buried, two (2) 4-inch HDPE pipes at the flare facility to ensure the pipes have continuous slope and drain freely. The pipes are located between the buried existing landfill gas manifold from the landfill to the existing condensate manhole.

The work also includes suppling HDPE landfill gas trench pipe and fittings for the County use.

7-10.2 MATERIALS

Materials shall meet the requirements of the following section:

Gravel Backfill for Pipe Zone Bedding	9-03.12(3)
HDPE Pipe and Fittings	9-05.30(1)
Blowers	9-05.31(1)
Flow Meter	9-05.31(2)
Valve	9-05.30(6) & 9-05.31(4)
PVC Pipe and Fittings	9-05.31(5)B
Pipe Supports	9-05.30(7)
Pipe Guides and Anchors	9-05.30(8)
LFG Wellheads	9-05.30(9)
Paint System	9-05.31(8)
LFG Meters	9-05.31(9)
Electrical	7-13

Provide all first quality, new materials, free from defects, and suitable for the intended use and space. Where two or more units of the same class of material are required, provide products of a single manufacturer.

Unless otherwise indicated, provide materials and equipment that are the standard products of manufacturers regularly engaged in the production of such materials and equipment. Provide the manufacturer's latest standard design that conforms to these specifications.

INFORMATIONAL COPY ONLY - NOT FOR BIDDING PURPOSES

7-10.3 SUBMITTALS

The CONTRACTOR shall provide certification that the person(s) butt-fusion and/or electro-fusion welding the HDPE Pipe and fitting have been certified by the manufacture as capable of welding HDPE Pipe and Fittings.

The CONTRACTOR shall provide certification that the pipe and fittings material, valves, used meet material specifications.

The CONTRACTOR shall provide certification that the blowers, flow meter, concrete, pipe and fittings material, valves, pipe supports, and paint used meet material specifications.

The CONTRACTOR shall submit in writing to the ENGINEER details of any proposed changes in or departures from these contract documents along with the reasons, therefore. Make no changes or departures without the prior written favorable review of the ENGINEER.

The CONTRACTOR shall submit shop drawings for the construction of the anchor blocks and pipe guides, as shown on the Plans.

7-10.3(1) Blowers

Submit the following:

1. Name, address, and phone number of the blower refurbishing firm.
2. Catalog cuts of all replacement parts.
3. Operation and Maintenance Manual.

7-10.3(2) Coatings

Submit the following:

1. Comprehensive data sheets for each product including generic description, complete technical data, surface preparation, and written application instructions.
2. Finish coat performance test records.
3. Material safety data sheets for each product.
4. Certification statements with each delivery of materials including statement of compliance with material submittals reviewed by the Engineer.
5. Film thickness measurements (wet or dry film thickness) for each coating application.
6. Lists and proportioning statements for thinners and, if used, additives.
7. Written certification of shop surface preparation and surface profile.
8. Warranties.
9. Painter's qualifications, with descriptions of at least 5 completed projects of similar size and complexity to this Work, including project location, owner, types of surfaces painted, surface preparation methods, and the specific products applied.

7-10.3(3) Electrical

In accordance with Section 7-13.

INFORMATIONAL COPY ONLY - NOT FOR BIDDING PURPOSES

7-10.3(4) Pipe and Fittings

The Contractor shall provide submittals on the pipe and fittings material, valves, and pipe supports such that they meet material specifications.

The Contractor shall submit, at the preconstruction meeting, a description of the pipe to be used which includes materials specifications provided by the manufacturer. The Contractor shall supply the manufacturer's certificate of compliance in accordance with Section 1-06.3 of the Standard Specifications prior to installing any piping.

The Contractor shall submit in writing to the Engineer details of any proposed changes in or departures from these contract documents along with the reasons, therefore. Make no changes or departures without the prior written favorable review of the Engineer.

Prior to shipping any materials to the site, the Contractor shall submit the following:

1. Manufacturer's product data including pipe, pipe accessories, valves, and appurtenances.
2. Pipe manufacturer's qualifications, and
3. Detailed catalog and engineering data sheets for all components.

Prior to fabrication of any components, the Contractor shall submit the following:

1. Shop drawings for specially fabricated fittings, and
2. Pipe fabrication's qualifications and certificates with applicable materials.

Prior to installation of any components, the Contractor shall submit the following:

1. Pipe installer's qualifications, and
2. A plan showing pipe installation sequence and schedule.

The Contractor shall provide a complete submittal on product information for the paint, including systems proposed, constituent ingredients for each coating, and manufacturer to be used. The Contractor shall provide an available color list.

7-10.3(5) Warranty

The blowers and flow meter manufacturers shall issue in writing and shall warrant all material, parts, and workmanship for at least two years from date of acceptance of project at the point of delivery. Defective parts, parts that are damaged, as a result of poor workmanship during equipment fabrication, and materials that deteriorate or degrade in the service environment shall be replaced free of charge.

If any portion of the system fails due to either materials or workmanship during the applicable period, the manufacturer shall repair, substitute, or replace the item at no-charge to the Owner. The manufacturer shall provide reasonable assistance and troubleshooting by telephone at no cost to the Owner.

7-10.3(6) Quality Control

The Contractor shall perform the Work in accordance with these specifications. These specifications apply to Quality Control and not quality assurance.

Contractor shall be responsible for Construction Quality Control (CQC). Contractor shall engage and pay for the services of qualified staff or a qualified subcontractor to perform CQC for monitoring and documenting the quality of the landfill gas system in accordance with the Contract Documents.

Unless otherwise specified, the Contractor shall complete CQC inspection, sampling, testing or any other action, as considered necessary by the Contractor to ensure that the Work has been completed in

INFORMATIONAL COPY ONLY - NOT FOR BIDDING PURPOSES

accordance with the Contract Documents. Notwithstanding the results of the CQC program, compliance of the Work with the Contract Documents shall be defined by the results of the Owner's CQA program.

Any Work that does not satisfy the requirements of the Contract Documents shall be corrected in accordance with requirements of the Contract Documents or as approved by the Owner/Engineer at the sole expense of the Contractor.

The Owner/Engineer shall be permitted to review the pipe and gasket manufacturing processes and test results at any time. The Owner's landfill technician will have input on the acceptance of the new landfill gas system installation and components.

7-10.3(7) Product Delivery, Storage, and Handling

Transportation is the responsibility of the CONTRACTOR, who shall be liable for all damages prior to and during transportation to the site. Unload and store with minimum handling. Store materials on-site in enclosures or under protective coverings. Store plastic piping and fittings in a flat, horizontal position, and under cover, out of direct sunlight. Do not store materials directly on the ground. Keep inside of piping free of dirt and debris.

Handle pipes, fittings, and other accessories in a manner that ensures delivery to the point of installation in sound, undamaged condition. Carry, do not drag, pipe to the point of installation.

Deliver, store, and handle materials in such a manner as to prevent damage to finished surfaces. Store above grade in clean dry locations. Protect from corrosion. Handle during construction to prevent overstressing any elements. Use appropriate lifting equipment such as a crane, boom truck, or forklift, for moving large items. Contractor shall not be allowed to move the flare or blowers using an excavator or backhoe boom or bucket.

7-10.4 CONSTRUCTION REQUIREMENTS

7-10.4(1) General

The landfill gas collection system collects and conveys landfill gas and condensate from the landfill Development areas via the landfill gas collection system piping to the flare facility. The main and lateral gas manifolds slope, as indicated on the Plans, for condensate removal at the low points (condensate manhole). The condensate collects in the existing HDPE condensate manholes. Condensate collected during system operation in the condensate manhole is pumped via a new pump system and piping system to the existing leachate pond. The landfill gas collection system contains valves for isolation of system components.

The landfill gas collection system HDPE piping and fittings shall be constructed in conformity with the line and grades as shown on the Plans and in accordance with Section 7-08.3. All pipe grades shall be continuous between grade breaks. The lines and grades shown on the Plans may be altered to maintain minimum grades as shown on the Plans; however, shall be approved by the ENGINEER.

7-10.4(2) Pipe and Fittings

7-10.4(2)A HDPE Pipe and Fittings

Trench excavation, general pipe installation, and backfill shall be in accordance with Section 7-08 and 7-09.3 of the Standard Specifications, these Special Provisions, and as shown on the Plans.

All pipes shall be supplied in the nominal diameter shown on the Plans. The interior of all piping shall be free and have no shavings, loose pieces, or sediment contained within the piping. CONTRACTOR may

INFORMATIONAL COPY ONLY - NOT FOR BIDDING PURPOSES

be required to flush piping system, as directed by the ENGINEER, if excess materials are contained within piping.

All piping shall have airtight joints unless otherwise specified on the Plans. All joints shall be butt-fusion or properly executed electro-fusion welded. No non-fusion couplers will be acceptable.

Joining individual lengths of pipe by butt fusion or electro-fusion welding shall be conducted according to manufacturer's recommendation. Butt fusion shall be done with equipment recommended by the pipe manufacturer. Care shall be taken to ensure alignment of perforations during welding.

Butt-fusion shall be made only when the pipe materials to jointed are clean and dry, and only at ambient temperatures of 40E Fahrenheit and above, or as approved by the ENGINEER. The butt-fusion shall be accomplished according to the pipe manufacturer's recommendation.

Pipe and joints shall be free from burrs, nicks, gouges deeper than 5 percent of nominal wall thickness, surface cracks, or defects. Pipe shall be open, clean, and free flowing upon completion of installation.

Where shown on the Plans, or for ease of installation, lengths of pipe shall be joined together by the use of flanges rather than thermal fusion. Flange bolts shall be tightened by pulling down on diametrically opposite nuts until proper bolt torque values are achieved. Bolt torques for the HDPE flanges shall not exceed the maximum value, according to manufacturer specifications for each appropriate pipe size. Each flange connection shall be equipped with a viton gasket.

Pipe shall be stored on flat ground to prevent bowing. Pipe determined by the ENGINEER to be damaged during storage or installation shall be replaced at the CONTRACTOR'S expense.

The CONTRACTOR shall provide necessary gaskets and bolting to install between adjoining flanges. Flanged connections are required where disconnection of one flange is required for removal, repair or maintenance of equipment. Flange connection shall be airtight.

Contractor shall provide mylar tape marker designated "Gas" about six inches above the conduit. Place conduit in select backfill without rocks.

Wellheads shall be placed in a manner as shown on the Plans. The wellheads shall be supported as shown on the Plans and the pipe supports shall be installed plumb and in accordance with manufacturer's directions. The existing wellheads shall be modified as shown on the Plans.

7-10.4(2)B PVC Pipe and Fittings

PVC pipe for the flare facility shall conform to Section 9-05.31(5)B and shall be installed in accordance with this Section. Joints shall be solvent-welded or flanged. The PVC pipe shall be painted in accordance with this Section.

All work shall be performed by craftsmen skilled in their trade. All work shall present a neat, finished appearance.

7-10.4(2)C Low Pressure Air Test

The CONTRACTOR shall test all landfill gas and condensate piping with a low-pressure air test prior to commencing normal service on this project. The CONTRACTOR shall provide all required temporary plugs, flanges and blind flanges, and all test equipment. The ENGINEER shall be present to inspect, observe and accept test. The CONTRACTOR shall notify the ENGINEER at least 48 hours in advance of any planned test. The ENGINEER may at any time require calibration test of gauges or other instrumentation that is incorporated in the test equipment.

The limits of the testing for landfill gas system piping shall include all of the 3, 4, 6, 8, and 10 inch piping with all valves in the open and closed position, and in the closed position at the wellheads at the wells.

INFORMATIONAL COPY ONLY NOT FOR BIDDING PURPOSES

Condensate piping testing shall be performed to include all piping within the manhole. No testing is required for the 3-inch piping upstream of the wellheads located at trenches. The 10 inch valve at flare facility connection should be in the closed position for the air test.

Testing shall be the same for the segment of the system or the entire system. The gauge used for the testing shall be certified accurate, marked in one-tenth pound per square inch increments.

Procedures for a low-pressure air test:

1. Interior of the pipe shall be clean and free of foreign materials and water prior to the test.
2. Plug all pipe outlets with suitable plugs. Brace each plug securely. Segments to be tested can be isolated using the nearest valve or by temporarily installing plugs or blind flanges. If valves are not suitable for testing, temporarily plugs or blind flanges are required.
3. Add air slowly to the portion of the installation under test until the internal pipe pressure is raised to 4.0 psig.
4. Check exposed pipe and plugs for abnormal leakage by coating with a soap solution. If any failures are observed, bleed off air and make necessary repairs. Restart the test.
5. After the appropriate internal pressure is obtained, allow at least five minutes for air temperatures to stabilize, adding only the amount of air required to maintain test pressure.
6. After a 10 minute stabilization period, disconnect air supply.
7. Start stop watch. The required test period is 60 minutes (one hour) and there is no allowable internal pressure change.

7-10.4(3) Valves

All valves shall be inspected upon delivery in the field to ensure proper working order before installation. The valves shall also be carefully inspected for injury to the outer protective coatings. Valves shall have the interiors cleaned of all foreign matter and shall be inspected both in open and closed position prior to installation.

Valves associated with the flare facility shall conform this Section. Install valves per manufacturer's instructions. Ensure adequate clearance for the full valve operation. Valves shall operate freely without binding or interference. Install valves with operator handles on top or as directed by the ENGINEER.

Generally, valves and accessories shall be installed in a manner and location as shown on the Plans or as required for the application and in accordance with manufacturer's instructions. Size of valve shall be equal to line piping in which valve is installed unless otherwise noted on the Plans. Support all valves where necessary. In case of conflict between these Specifications and a governing code, the higher standard shall prevail.

7-10.4(4) Blowers

Install two new New York gas blowers as shown on the Plans and in accordance with the Section 9-05.31(1) and manufacturers or suppliers information.

Install a mounting pad for each bolt. Pads shall be neatly cut or punched to fit over the bolt and centered about the skid flange.

Blowers shall be installed per supplier's direction and any specialized set-up, inspection, or start-up procedure shall be performed by the blower supplier's authorized representative.

Blowers shall be tested by the supplier and shall include an installed test to demonstrate that the blowers perform as specified in Section 7-13.12(8), 7-13.12(15), and 7-13.12(16).

INFORMATIONAL COPY ONLY NOT FOR BIDDING PURPOSES

Gas flow shall be determined using a standard pitot-tube transverse of the blower inlet piping. Static pressures shall be measured on the inlet and discharge of the blowers. Concurrent inlet gas temperature, blower amperage, and line voltage measurements shall be made by a qualified technician. The blower supplier shall calculate the operating point in of gas flow, differential pressure, and motor horsepower. The blower supplier shall include reasonable corrections, as approved by the Engineer, for inlet conditions, discharge conditions, and pipe and fittings loss.

CONTRACTOR shall install the flanged flange flexible couplings per supplier's direction, as shown on the Plans. Unless otherwise noted, the flexible coupling shall be installed at its resting length, neither compressed nor stretched, and shall be equipped with two stainless steel clamps per end, or as directed by the ENGINEER.

Electrical requirements shall meet Section 7-13.

All work shall be performed by craftsmen skilled in their trade. All work shall present a neat, finished appearance.

7-10.4(5) Flow Meter

Flow meter shall be in accordance with Section 9-05.31(2). The flow meter shall be installed at a location upstream of the flare as shown on the Plans and per the manufacturer's recommendations. The meter shall be installed tilted per the manufacturer's recommendations since the landfill gas is saturated and may interfere with proper operation. The display unit shall be mounted at the electrical control panel for the condensate manhole pump as directed by ENGINEER.

Electrical requirements shall meet Section 7-13.

All work shall be performed by craftsmen skilled in their trade. All work shall present a neat, finished appearance.

7-10.4(6) Pipe Supports

Install pipe supports per manufacturer's instructions and as shown on the Plans.

7-10.4(7) Pipe Anchors and Guides

The pipe anchors and guides for the 6" HDPE lateral aboveground pipe shall be placed and installed in a manner as shown on the Plans, or as directed by the Engineer.

Pipe anchor shall be installed between the 6-inch valve the flange connection as shown on the Plans. Pipe guides shall be installed 2 feet into the ground, on both sides of the 6-inch lateral landfill gas pipe, and 25 feet on-center along the pipe, but shall not be installed within 10 feet of any fitting except for the end (high point) of the lateral pipe; in which case, the pipe guides shall be within 5 feet from the end of pipe.

7-10.4(8) Painting

All exposed PVC surfaces located at the flare facility shall be painted in accordance with this Section and Section 9-05.31(8).

7-10.4(8)A Compatibility of Coatings

CONTRACTOR shall be responsible for compatibility of all paint products. Test coatings applied to an existing surface coating by patch test to determine suitability. All sufficient time to demonstrate compatibility per manufacturer's recommendations.

INFORMATIONAL COPY ONLY - NOT FOR BIDDING PURPOSES

7-10.4(8)B Inspection prior to Application of Field Primer and Finish Coatings

CONTRACTOR shall clean all surfaces immediately prior to coating. Inspect all surfaces for conformance to specified preparation standards. Request and obtain ENGINEER'S inspection for each coating surface preparation prior to coating application.

7-10.4(8)C Paint Smoothness, Cover, and Sheen Tolerance

The finish coating surface smoothness equal to base surface preparation smoothness. Uniform luster with even appearance free of lap marks. Thickness tolerance +/- 10% in any given location, but average not to be less than specified mil coverage.

7-10.4(8)D Paint Application Conditions

CONTRACTOR shall apply paint in a clean, dry environment and at temperatures recommended in manufacturer's preprinted instructions. The surface temperature shall be a minimum of 5 degrees F above wet bulb temperature. The maximum humidity shall not exceed 85 percent. During applications shield painted surfaces from hot sun with appropriate housing when applying paints. Do not apply coatings in areas where dust is being generated or is present. Do not apply in fog, snow, or rain conditions; or to wet or damp surfaces.

7-10.4(8)E Application

Inhibitive additives such as fungus or mildew shall be added to all non-epoxy products. Coatings shall be applied at specified rates and consistency per selected manufacturer's specific application instructions. Application coats shall be buildup in multiple or single finish coats as specified. Coatings shall be thinned only with specifically formulated thinners for use by approved manufacturer. The tint primer, second, and finish coats shall have different color shades to verify coverage.

7-10.4(8)F Recoat Dry Time

CONTRACTOR shall permit adequate cure-drying interval between multiple coats as determined by manufacturer's recommended drying time at specified cure conditions.

7-10.4(8)G Safety and Protection

CONTRACTOR shall provide the following:

1. Safe working environment for paint applicators.
2. Adequate heat and forced mechanical ventilation for health, safety, and drying requirements.
3. Approved face masks.
4. Protect adjacent surfaces with suitable masking and drop cloths as required.
5. Dispose of paint rags, empty containers, clothes, worn applicators to avoid hazardous situations.
6. Clean up daily.

7-10.4(8)H Finish and Color Schedule

Painted surfaces shall be colored in accordance with OWNER-selected schedules provided during the construction work. CONTRACTOR shall submit for approval prior to any painting, color, manufacturer and color chips of all coatings.

INFORMATIONAL COPY ONLY - NOT FOR BIDDING PURPOSES

7-10-4(9) Concrete Pads

The concrete pads for the flare facility shall be in accordance with Section 6-02 of the Standard Specifications, and as shown on the Plans.

Material properties shall conform and in accordance with Section 6.02, Concrete Structures, and Section 5-05.3(3)A, Curing Compounds to:

Concrete:	F'c = 3000 PSI (Class 3000)
Reinforcement:	ASTM A615, Grade 60

All corners shall be chamfered 3/4-inch.

Assume 2-inch minimum clearance from concrete edge to all reinforcements unless shown otherwise.

7-10.4(10) Existing Condensate Drain Pipes

The existing condensate pipes at the flare facility between the proposed blower concrete pad and the existing condensate manhole, as shown on the Plans, shall be exposed by removing existing crushed surfacing and overlying soil. Contractor shall notify the Engineer 72 hours prior to excavating. The Contractor shall perform the following tasks:

1. Expose the two, buried 4-inch HDPE condensate pipes to ensure condition and drainage slope of the pipes from the existing buried 10-inch landfill gas manifold to the existing HDPE condensate manhole. The pipes are both equipped with a 4-inch stainless steel ball valves and vault box.
2. If the existing pipes are in good condition and drain continuously with no low points from the 10-inch lfg manifold to the existing condensate manhole and verified by the Engineer, the pipes shall be backfilled in accordance with the Specifications.
3. If not, the pipes shall be removed as directed by Engineer. Contractor shall take steps to collect and remove condensate from the piping as approved by the Engineer, and dispose of any collected condensate at the existing leachate pond, located in the southeast corner of the landfill.
4. The soil beneath the pipes shall be excavated a minimum of 2 feet below pipe or until original native material is encounter as approved by the Engineer.
5. Condensate pipes shall be re-installed with continuous slope from the manifold to the manhole connection. Buried ball valves shall be installed and plumb.
6. Pipes shall be backfilled in accordance with the Specifications.

7-10.5 HAZARDOUS AREA CLASSIFICATION

The following areas are classified hazardous locations:

1. Blowers: A 15-foot radius of all flanges and sources of leakage is classified Class 1, Division 2, Group D.
2. Condensate Manhole:
   - The manhole interior is classified Class 1, Division 1.
   - A 3-foot diameter bubble around the blind flange (access hatch) is classified Class 1, Division 1, Group D.

INFORMATIONAL COPY ONLY - NOT FOR BIDDING PURPOSES

- A 5-foot diameter bubble around the blind flange (access hatch) is classified Class 1, Division 2, Group D.
- Outside the 3-foot bubble around the blind flange (access hatch), the area within a 10-foot radius around the blind flange and 18 inches above the ground is classified Class 1, Division 2, Group D.

3. Flare is unrated.

7-10.6 MEASUREMENT

1. No specific unit measurement shall apply to the lump sum item for "Flare Facility."
2. "8-inch HDPE Solid Wall LFG Pipe," "6-inch HDPE Solid Wall LFG Pipe," and "3-inch HDPE Solid Wall HDPE LFG Pipe," by the unit price per liner foot. The length of landfill gas piping shall be the number of linear feet of the completed installation measured along the invert as shown on the Plans and includes the length through elbows, tees, valves, and fittings.
3. "Modified Existing LFG Wellheads," per each.
4. "LFG Wellheads," per each.
5. "LFG Meters," per lump sum. No specific unit measurement shall apply to the lump sum item for "LFG Meters."
6. "6-inch HDPE Solid Wall Trench Pipe," 6-inch HDPE Perforated Trench Pipe," and "4-inch HDPE Perforated Trench Pipe," per linear foot.

7-10.7 PAYMENT

Payment shall be as follows:

1. Payment will be made in accordance with Section 1-04.1 for the following bid item "Flare Facility," per lump sum. The lump sum contract price for "Flare Facility" shall include all costs for the work required to meet the requirements specified in Section 1-07.28. The lump sum cost shall include all costs for all materials, equipment, grading, freight, storage, labor, painting, training, and testing required to furnish and install the blowers and foundation, flow meter, flexible couplings, PVC piping and fittings, valves, pipe supports, and other specialty equipment as shown on the Plans or as required by the specifications.

   The lump sum bid price shall also include all site excavation, re-furbishing existing buried condensate drain pipes (if required), excavation and backfill of existing pipe, condensate removal, hauling, and pumping (if required), pipe and foundation excavations, shoring, fencing repair, buried valve and boxes replacement, prepared subgrade, re-establishing finish grade (crushed surfacing replacement), backfill and compaction around structures and piping, concrete slab and foundations, and pipe supports, as shown on the Plans.

2. "8-inch HDPE Solid Wall LFG Pipe," "6-inch HDPE Solid Wall LFG Pipe," and "3-inch HDPE Solid Wall LFG Pipe."

   The unit contract price per linear foot for buried HDPE pipe and fittings shall be full compensation for all cost for materials, labor, tools, testing, and equipment necessary to furnish and install the pipe and fittings for the landfill gas,

   The unit price per linear foot shall include the cost to furnish and install all elbows, tees, reducers, tee reducers, pipe guides, pipe anchors, pipe supports, stainless steel flange connections, stainless steel fasteners, blinds, line size valves, pipe anchoring soil material, and other fittings associated with the piping, as shown on the Plans.

INFORMATIONAL COPY ONLY - NOT FOR BIDDING PURPOSES

The unit bid price for buried HDPE pipe shall also include all costs associated with trenching, shoring, bedding, sloping, dewatering, backfill required for installation. No additional compensation will be allowed for trench excavation, backfill, marking tape, and restoration of existing areas including the access roads and perimeter ditches, and shall be incidental to the Contract.

The unit bid price for aboveground HDPE pipe shall also include all costs associated with bedding, grading subgrade, sloping, backfill required for installation, pipe guides, anchor blocks, and valves.

3. "Modified Existing LFG Wellheads," per each:

   The unit contract price bid per each shall be full compensation for furnishing, replacing existing items, and installing new items at the existing wellhead locations. The unit price per each item shall include all cost for materials, labor, tools, testing, and equipment necessary to furnish and install the wellheads pipe and fittings as shown on the Plans.

   The unit price per each item shall include the cost to furnish and install pipe, PVC and HDPE flanges, flow valve, flexible hose and clamps, and other fittings associated with the wellheads.

4. "LFG Wellheads," per each.

   The unit contract price bid per each shall be full compensation for furnishing and installing wellheads on to the existing landfill gas trenches and new leachate cleanouts and shall include all cost for materials, labor, tools, testing, and equipment necessary to furnish and install the wellheads pipe and fittings as shown on the Plans.

   The unit price per each item shall include the cost to furnish and install pipe, PVC and HDPE flanges, pipe support, flow valve, flexible hose and clamps, PVC monitoring port, elbows, and other fittings associated with the wellheads.

   Costs associated with any earthwork, bedding, sloping, and backfill required for the wellheads shall be incidental to the item with no additional compensation allowed.

5. "LFG Meters," lump sum.

   The lump sum contract price shall be full compensation for all costs to furnish the landfill gas meters as specified.

6. "6-inch Solid Wall HDPE Trench Pipe," "6-inch Perforated Trench Pipe," and "4-inch Perforated Trench Pipe," per linear foot:

   The unit contract price per linear foot for trench HDPE solid wall and perforated pipe and fittings shall be full compensation for all cost for materials, labor, tools, and equipment necessary to furnish and stockpile the pipe and fittings.

   The unit price per linear foot shall include the cost to furnish, and install tee and all flange connections on one end of the solid wall pipe.

7-13 ELECTRICAL AND CONTROL SYSTEMS (NEW SECTION)

7-13.1 DESCRIPTION

This work consists of installing two motor blowers, a flow meter, and controls at the existing flare facility. This consists of two blowers, flow meter, and piping and valves. Each blower (one in-service and one backup) is designed to handle the anticipated maximum landfill gas flow rate for the existing landfill. The existing open flare is designed to handle the maximum flow rate as well as a wide range of

INFORMATIONAL COPY ONLY - NOT FOR BIDDING PURPOSES

landfill gas flows and methane concentrations. The blowers will induce a vacuum on the landfill that will pull the gas through the collection system and discharge it to the flare.

The existing condensate pump station and controls are located within the flare facility at the low point of the landfill gas collection system. The condensate manhole serves as a wet well and is equipped with a submersible pump that pumps collected condensate to the evaporation pond for disposal. The liquid level in the manhole creates a vacuum seal to restrict air infiltration.

This work also consists of installing the electrical service conduit from the existing power pole/panel as shown on the Plans to the new blower control panel at the existing concrete pad and installing new conduit to the blowers and flow meter. Existing pull box vaults are located between the power source to the flare facility, as shown on the Plans.

The work also includes replacing the existing condensate manhole, CM-2, control panel with a new control panel.

7-13.2 MATERIALS

Materials shall meet the requirements of this Section and the following section:

Blower Controls	9-30.31(1)
Flow Meter	9-05.31(2)

Provide all first quality, new materials, free from defects, and suitable for the intended use and space, and in accordance with City Energy Service specifications and codes. Where two or more units of the same class of material are required, provide products of a single manufacturer.

Unless otherwise indicated, provide materials and equipment that are the standard products of manufacturers regularly engaged in the production of such materials and equipment. Provide the manufacturer's latest standard design that conforms to these specifications.

7-13.3 GENERAL

Provide all electrical and instrumentation materials and labor to complete all electrical work shown on the Plans, specified, or neither shown nor specified but necessary for a complete and fully operating flare facility and condensate system.

The motor blower system shall perform to the design operating requirements within the conditions and dimensions as described and shall be complete and minimally consist of two blowers and motor assemble, and a flow meter. The blowers shall be installed with a system controller.

The condensate pumping system shall perform to the design operating requirements within the conditions and dimensions as described, and shall be complete and minimally consist of a pump and motor assembly with power cable; system controller and level sensors, and cable with gauges and meters as required; deployment and retrieval assembly to include pump carriage; discharge pipe assembly; appropriate discharge fittings for gas-tight transition pipe riser wall and all appropriate fasteners, fittings, and accessories necessary for operation in the service intended.

The Contractor shall coordinate the electrical work included in these Specifications with all other work crafts and trades to assure proper installation and timely execution of the work, and to provide necessary support to other crafts and trades. The Contractor shall review and incorporate the electrical requirements of all prefabricated equipment being supplied to assure the proper voltage and number of phases are provided to each. Any changes necessitated by failure by the Contractor to coordinate with other trades shall be made without additional cost to the Owner.

INFORMATIONAL COPY ONLY - NOT FOR BIDDING PURPOSES

Before submitting a Bid, visit the project site. Make allowance in the Bid for any special conditions affecting the cost of the proposed work.

7-13.4 STANDARDS

System shall be installed in accordance with the following applicable standards and/or articles:

1. American National Standards Institute (ANSI) Publications
2. American Society for Testing and Materials (ASTM) Publication
3. Institute of Electrical and Electronics Engineers (IEEE)
4. National Electrical Code (NEC)
5. National Electrical Manufacturers Association (NEMA)
6. National Fire Protection Association (NFPA) Publication
7. Underwriters Laboratories (UL) Publication

7-13.5 QUALITY ASSURANCE

Electrical equipment, materials, and installation methods shall conform to all applicable local and state codes as well as the editions of the following in effect on the date of issuance of the Contract Documents.

1. National Electrical Code (NEC)
2. National Electrical Safety Code (NESC)
3. Washington Industrial Safety and Health Act (WISHA).

Equipment shall conform to the applicable standards of ANSI, EIA, IEEE, and NEMA. The revisions of these standards in effect on the date of issuance of the Contract Documents shall apply.

UL listing is required for all equipment and materials where such listing is offered by the Underwriters Laboratories. Safety labeling and listing by other organizations, such as ETL Testing Laboratories, may be substituted for UL labeling and listing if acceptable to the authority having code enforcement jurisdiction.

Provide equipment with service entrance labels in those cases where the NEC requires such labels.

Series short circuit ratings for protective devices are not allowed.

7-13.6 DRAWINGS

The electrical drawings are diagrammatic; exact locations of products shall be determined in the field by the Contractor.

Submit in writing to the Engineer details of any proposed changes in or departures from these Contract Documents along with the reasons, therefore. Make no changes or departures without the prior written favorable review of the Engineer.

Maintain a set of As-built drawings, which document all changes made. Upon completion of the work, transfer these changes to a clean set of full-size drawings with red ink to indicate additions and green ink to indicate deletions. Submit these full size drawings to the Engineer.

INFORMATIONAL COPY ONLY - NOT FOR BIDDING PURPOSES

7-13.7 SERVICE

Electrical power is be supplied by the Grant County PUD. Currently, power is provided near the southeast power pole located on the south end of the landfill property. The Service entrance is located at Panel P-1 as shown on the Plans.

Remove existing Leachate pump station Disconnect and provide a new panelboard service entrance rated. Service power shall be 480 volts, 3-phase. Provide equipment by Cutler Hammer, Square D, or equal.

7-13.8 HAZARDOUS AREA CLASSIFICATION

The following areas are classified hazardous locations:

1. Blower: A 15-foot radius of all flanges and sources of leakage is classified Class 1, Division 2, Group D.
2. Flare is an unrated area.
3. Condensate manhole interior is classified Class 1, Division 1.
4. A 3-foot diameter bubble around the blind flange (access hatch) is classified Class 1, Division 1.
5. A 5-foot diameter bubble around the blind flange (access hatch) is classified Class 1, Division 2.
6. Outside the 3-foot bubble around the blind flange (access hatch), the area within a 10-foot radius around the blind flange and 18 inches above the ground is classified Class 1, Division 2.

The electrical and I&C installation shall be in compliance with the National Electrical Code, Article 501.

7-13.9 EXPERIENCE ASSURANCE

All equipment within the flare facility listed in this section shall be provided by a single manufacturer who shall have sole and complete responsibility for the system without recourse to others.

The manufacturer shall have a minimum of ten (10) years experience in providing complete condensate pumping systems for landfill applications or similar experience.

The supplier of the flare facility system and condensate controls shall provide all warranty and warranty services without regard for or dependence on pass through warranties, which may or may not provided by the original equipment manufacturer of various components of the system for a period of sixty (60) months from date of startup by the manufacturer or authorized representative, or eighteen (18) months, if startup services are performed by others.

7-13.10 WARRANTIES

The complete condensate pumping system as a whole, inclusive of all provided components, parts, equipment, controllers, instrumentation, assemblies and accessories shall be warranted to be free of defects in material and workmanship for a period of sixty (60) months from date of startup by the manufacturer or authorized representative, or eighteen (18) months, if startup services are performed by others.

If any portion of the system fails due to either materials or workmanship during the applicable period, the manufacturer shall repair, substitute, or replace the item at no-charge to the Owner. The manufacturer shall provide reasonable assistance and troubleshooting by telephone at no cost to the Owner.

INFORMATIONAL COPY ONLY - NOT FOR BIDDING PURPOSES

7-13.11 SUBMITTALS

Manufacturers' trade names and catalog numbers stated herein are intended to indicate the type and quality of equipment desired. The Contractor shall submit in writing to the Engineer details of any proposed changes in or departures from these contract documents along with the reasons, therefore. Make no changes or departures without the prior written favorable review of the Engineer.

Submit a single, complete submittal package for all products in this Division. Submittal package shall be organized by equipment type. Include separators and tabs or other means of identifying each item.

The Contractor shall provide a complete list of components provided for the electrical and controls for the flare facility and condensate pump systems. The submittal package shall include motor data, site-specific layout drawing, control panel drawings consisting of wiring schematic, bill of materials, and component layout drawing, and warranty statement.

The Contractor shall submit all electrical/instrumentation systems and components for favorable review by the Engineer. Submittal documents shall be complete with table of contents, material/component list, catalog cuts, layout drawings, elementary control diagrams, loop diagrams, wiring diagrams, and panel elevation drawings showing all components layouts (interior and exterior), conduit, pull box, and transformer pad and vault. Submittals shall include manufacturer's product specifications and data sheets which describe properties and characteristics.

The Contractor shall submit in writing to the Engineer details of any proposed changes in or departures from these contract documents along with the reasons, therefore. Make no changes or departures without the prior written favorable review of the Engineer.

The Contractor shall submit Operations and Maintenance Manual (O&M Manual) for the equipment and systems provided.

The O&M Manual shall be submitted as follows:

- Two paper copies secured in three ring notebooks.
- One electronic copy provided in portable document format (pdf) with text-searchable capability.

7-13.12 CONSTRUCTION REQUIREMENTS

7-13.12(1) GENERAL

Outdoor freestanding electrical control equipment shall be mounted on the existing 12-inch thick, reinforced concrete pad sized as shown on the Plans and stated in this Section with non-shrink grout as required between concrete pad and equipment base unless otherwise noted. All equipment shall be level or plumb.

Provide protection for materials and equipment against loss or damage. Protect everything from the effects of weather. Prior to installation, store all items in indoor locations. In addition, items subject to corrosion under damp conditions, and items containing insulation, such as transformers, motors, and control, shall be stored in indoor, heated, dry locations.

Following installation, protect materials and equipment from corrosion, physical damage, and the effects of moisture on insulation. Cap conduit runs during construction with manufactured seals. Keep openings in boxes or equipment closed during construction.

Provide protection for materials and equipment against loss or damage. Protect everything from the effects of weather. Prior to installation, store all items in indoor locations. In addition, items subject to corrosion under damp conditions, and items containing insulation, such as transformers, motors, and control, shall be stored in indoor, heated, dry locations.

INFORMATIONAL COPY ONLY - NOT FOR BIDDING PURPOSES

Lay out work carefully in advance. Do not cut or notch any structural member or building surface without specific approval of Engineer. Carefully carry out any cutting, channeling, chasing, or drilling of floors, walls, partitions, ceilings, paving, or other surfaces required for the installation, support, or anchorage of conduit, raceways, or other electrical materials and equipment. Following such work, restore surfaces neatly to original condition using skilled craftsmen of the trades involved at no additional cost to the Owner.

Keep the premises free from accumulation of waste material or rubbish. Upon completion of work, remove materials, scraps, and debris from premises and from interior and exterior of all devices and equipment. Touch up scratches, scrapes, or chips in interior and exterior surfaces of devices and equipment with finishes matching as nearly as possible the type, color, consistency, and type of surface of the original finish.

7-13.12(2) Blowers

The Contractor shall install the blowers and control panel as shown on the Plans.

The operating requirements shall be as follows:

1. One Blower shall run at all times when place in the hand or auto mode. Other blower shall be idle and for backup.
2. Emergency Stop Button.
3. Overload switch: normally open, closed status shall cause high audible alarm and light beacon in accordance with Section 7-13.12(8).

7-13.12(3) Conduit and Wireway

Install conduit types in accordance with the following Tables:

Table 1. Conduit Use

	Inside Buildings						
	Exposed			Concealed			
Circuit Type	**Standard**	**Corrosive**	**Hazardous**	**Above Suspended Ceilings**	**In Stud Walls**	**Embedded In Concrete**	**Slab On Grade**
Power & 120 Vac Control	GRS	PVC-40[a]	GRS	N/A	N/A	GRS	GRS
Signal	GRS	PVC-40[a]	GRS	N/A	N/A	GRS	GRS

Note – Bond all metal raceways and enclosures to ground.

INFORMATIONAL COPY ONLY - NOT FOR BIDDING PURPOSES

Table 2. Conduit Use

Circuit Type	Outside Buildings			Transition
	Exposed	Buried In Soil	Duct Bank Encased In Concrete	Within 5 Feet Of Building
Power & 120 Vac Control	GRS	PVC-40[a]	PVC-40[a]	GRS
Signal	GRS	GRS	GRS	GRS

Note – Bond all metal raceways and enclosures to ground. Underground conduit or duct banks shall have detectable underground utility warning tape 12 inches above conduit or duct bank.

Signal circuits are those subject to RF interference or induced current. TSPs, telephone cable, coaxial cable, and manufacturer's cables specially designed for low-level signals are all presumed to be part of signal circuits.

From pull point to pull point, the sum of the angles of all of the bends and offsets shall not exceed 270 degrees.

In concrete floors on grade, install conduits between grids of reinforcing steel, or encase conduits below the floor providing concrete cover at least equal to that of the reinforcing steel. Space conduits at least 3-conduit-diameters apart except where they cross at angles greater than 45 degrees. Install all conduits so as not to reduce the structural integrity of the concrete element.

At all boxes and equipment, provide insulated-type metallic grounding bushings for metallic conduits. Bond all conduits together to provide continuity of the equipment grounding system. Size bonding conductor per NEC.

Where exposed raceways cross expansion joints, provide watertight expansion fittings and bonding jumpers whether conduits are embedded or exposed. In hazardous locations, provide Crouse-Hinds UNF/UNV, equivalent Appleton, or equal. In unclassified locations, provide Crouse-Hinds XD, equivalent Appleton, or equal.

Ream all GRS to remove burrs after cutting.

For GRS conduit, treat cut surfaces or damaged ends of all raceways with a corrosion-resistant coating such as Devcon Z, prepared by Subox Coatings; Galvanox Type I, prepared by Pedley-Knowles; or equal, following manufacturer's recommendations.

Properly support all conduits as required by the NEC. Support individual conduits on concrete surfaces using one-hole clamps with back spacers or using framing channels. Framing channel shall be hot dipped galvanized unless otherwise noted on drawings.

Make all penetrations gas tight into and out of hazardous locations. In concrete, pour concrete after the conduit is in place.

After completing an underground conduit or duct run, prove the integrity of the run by pulling through it a mandrel 1/4 inch smaller than the inside diameter of the raceway.

Provide metalized warning tape marker designated "Electrical" a foot above the conduit. Place conduit in select backfill without rocks.

INFORMATIONAL COPY ONLY - NOT FOR BIDDING PURPOSES

7-13.12(4) Wire and Cable

For wire 600 volts or less, use type as follows:

1. Circuits for receptacles, switches, and light fixtures having screw-type terminals: solid copper sizes No. 12.
2. Circuits for motors, power feeders, and power branch circuits: stranded copper sized in compliance to NEC and as shown in conduit and cable schedule. If not specified minimum conductor size shall be No. 12 AWG.
3. Control circuits: stranded copper No. 14 AWG and larger.
4. All conductors and cables for direct burial shall be labeled USE or UF and shall have RHW insulation and heavy-duty, black, neoprene sheath meeting the physical and minimum thickness requirements of ICEA S-19-81.

Provide color coding as follows:

1. Neutral: white or gray.
2. Grounding conductor: green.
3. Ungrounded conductors:
   a. 208Y/120V 3-Phase: red, black, and blue.
   b. 480Y/277V 3-Phase: brown, orange and yellow.
   c. 120/240V 1-Phase: red and black.

Pulling wires and cables. The raceway construction shall be complete and protected from the weather before the conductors are pulled into it. Swab conduits to clean out foreign objects before installing conductors. Exercise care in pulling wires and cables into conduits or wireways so as to avoid kinking, putting undue stress, or otherwise abrading or damaging them. No grease will be permitted in pulling conductors. Use only wire pulling lubricants listed and approved by the conductor manufacturer. Provide adequate bending radius. Install feeder cables in one continuous length without splices wherever possible.

Provide an equipment-grounding conductor, whether or not it is shown on the Drawings, in any flexible conduit or any raceway in which all or any portion of a run consists of non-metallic duct or conduit.

In panels, bundle incoming wire and cables, No. 6 AWG and smaller, lace at intervals not greater than 6 inches, neatly spread into trees, and connect to their respective terminals. Allow sufficient slack for alterations in terminal connections. For lacing, use plastic cable ties or linen lacing twine. Lacing is not necessary where conductors are properly installed in plastic panel wiring duct. For cables crossing hinges, utilize extra flexible stranded wire, make up into groups not exceeding 12, and arrange so that they will be protected from chafing when the hinged member is present.

Splices in wire and cable rated 600 volts or less: Install all conductors without splices unless necessary as determined and pre-approved in writing by the Engineer. All splices in pull boxes below grade shall be watertight.

1. Solid conductors: Use insulated wire nuts listed for application and only for lighting and receptable branch circuits.
2. Stranded conductors, No. 14 through No. 8 AWG: Use compression crimp-type connectors, submersible rating, listed for application, and insulating tape.

INFORMATIONAL COPY ONLY - NOT FOR BIDDING PURPOSES

3. Stranded conductors, No. 6 AWG and larger: Use bolted pressure type connectors, submersible rating, listed for application, and insulating tape.

4. Splices in electrical manholes and in electrical handholes: No conductor splices in manholes used as wet well pumping stations. Use watertight epoxy resin splice kits.

All cable must be kept dry and free of contaminants while storing, pulling and terminating.

Terminate all low-voltage stranded conductors using spade-type terminals unless box lug terminals are on the equipment.

Signal cable shall be installed by personnel who have had a minimum of 3 years experience in terminating and splicing twisted shielded conductors and coaxial cables.

Adequate care shall be exercised by the installers to prevent cable damage or sheath distortion. Bending radius shall not be less than 10 times the cable overall diameter.

Immediately after placement, the cable shall be tagged with permanent, properly encoded, heat shrinkable wire identification tags. Identification tags shall be placed on each end of conductor near termination.

Signal cable shielding shall be grounded at one end only of the cable. Bonding shall be to a single ground point only. Bonding from cable to cable in multiple run installations shall not be permitted.

Heat-shrinkable sleeving shall be installed on all cables to insulate shielding at the ungrounded cable terminations.

Connectors and splices shall conform to Federal Specification W-S-610.

Shielded cable carrying analog signals shall be installed in GRS metallic conduit except in corrosive areas. Where installed in control consoles containing power circuits, maintain a minimum of 2 inches separation between power and control cables. Color-coding shall be strictly observed throughout the installations.

Manufacturer's cable pulling tension shall not be exceeded.

Each cable shall be tested for continuity and for freedom from shorts or grounds prior to connection to sensors, signal conditioners, or instruments.

Analog signal loop resistance shall not exceed manufacturer's recommendations for the instruments served.

7-13.12(5) Wiring Devices

Wiring device mounting:

1. Damp or wet locations: Install devices and enclosures listed and UL approved for these locations.

7-13.12(6) Motor Controllers

Install and connect in accordance with manufacturer's recommendations.

Contractor shall compile a list and submit the completed list to the Engineer for review of the following data:

1. Equipment driven.
2. Motor nameplate data.
3. Overload heater current rating and catalog number.
4. Motor circuit protector rating, trip setting, and plug number.
5. Timing relay setting if included in controller.

INFORMATIONAL COPY ONLY - NOT FOR BIDDING PURPOSES

Check rotation for all driven equipment and correct as required.

7-13.12(7) Control Panel

Install blower Control Panel as indicated on the Drawings and in accordance with the manufacturer's instructions. Replace the condensate Control Panel.

The Control Panel enclosures shall have vertically hinged front doors; provide hinge on side of panel that ensures compliance with the 30-inch rule in NEC Paragraph 110-16(a). The enclosure door shall be secured by a keyed three-point latch and full gasketed. Mount the door devices through the door. Provide nameplates to identify each device. Nameplates shall be UV resistant and weather resistant bonded to door. Each component within the panel shall be securely mounted and arranged for easy servicing, such that all adjustments and components removal can be accomplished without disturbing other components. No fastening devices shall project through the outer surfaces of the cabinet and all components and terminals shall be mounted on mounting pans within the panel. The Control Panels shall be provided with all components, wiring, field terminals, lights, switches, power supplies, mounting devices and hardware, racks,.lugs, and any other necessary devices for a complete control system for the project process.

The Control Panels shall be equipped with all necessary equipment for maintaining temperature control within the enclosure. Panel shop must submit design data to clarify that the enclosure is suitably equipped to provide the environment necessary for the installed components.

The Control Panels shall consist of a NEMA 4X Stainless Steel enclosure approximately 24 inches wide by 36 inches high by 12 inches deep. The Control Panel shall be mounted with the top of the enclosure 6 feet 6 inches above the concrete floor. The Control Panel shall be mounted on two vertical 6 inch galvanized steel channels, welded to a foot plate, and the foot plate shall be bolted with anchor bolts into a concrete pad as follows:

1. Flare facility: Existing 10'-0" wide x 6'-0" deep x 12" thick concrete equipment pad as located on the Plans. Control Panel shall be mounted near the north end and located on the pad near the existing 4-inch conduit. Control Panel shall be lined-up with the existing Condensate Control Panel. Locate Control Panel to provide a minimum of 3 feet concrete equipment pad when standing on in front of the Control Panel. Contractor to show location of Control Panel on shop drawing and obtains Engineer's written approval for location.

   Contractor shall locate both the new blower Control Panel and new flow meter Transmitter next to the existing condensate Control Panel on the same existing concrete equipment pad.

2. Condensate Manhole, CM-2: The new, replaced condensate Control Panel shall be placed in the same location as the existing condensate Control Panel.

Conduits between the blower Control Panel and the blowers and flow meter Sensor shall be exposed surfaced mounted on the concrete equipment pad and transition to underground conduits at the edge of the concrete equipment pad. Locate surface mounted conduits to not be a trip hazard in front of Control Panels.

7-13.12(7)A Blower Control Panel

The Control Panel shall be supplied with the blowers and manufactured by Elpac, Inc. The Control Panel shall include the following:

1. Two (2) 10 Hp motor controllers – 460v.
2. Two 480V, 30-amp, 3-pole pad lockable thermal magnetic circuit breakers (one for each motor).
3. Two 120V, 15-amp single pole circuit breakers.

INFORMATIONAL COPY ONLY - NOT FOR BIDDING PURPOSES

4. Emergency stop switch.
5. START, STOP push buttons (one set for each blower).
6. Hour meters.
7. Blower "RUN" green lights (LED, Push-to-test).
8. Blower "FAIL" red lights (LED, Push-to-test).
9. Omnidirectional visual alarm beacon.
10. Alarm Horn
11. Alarm silence button
12. Alarm reset button.
13. NEMA 4X enclosure with IEC style components.
14. 1,000 VA 480V-120 volt control power transformer.
    a. Control power transformer shall be sized to include the Flow Meter Transmitter electrical load.
15. Name plates: BL-1 and BL-2.
16. Panel heater with thermostat.
17. 15-watt fluorescent fixture in panel with a door switch.
18. Weather proof 15-amp duplex receptacle.
19. UL Label.

Blower Motor Control Panel does not require a main disconnect switch with circuit breaker on the line side of Blower no. 1 and Blower no. 2 circuit breakers. The Owner will have the Contactor provide a 480V, 30AF, 30AT, 3 pole fused disconnect switch adjacent to the Blower Motor Control Panel for the input power to the Blower Motor Control Panel.

Provide an omnidirectional visual alarm beacon on top of the Control Panel, provide a relay to seal-in the alarm condition until a reset button is depressed.

Provide a Hand/Off/Auto (HOA) switch, which shall operate the blower when in HAND and via overload control when in AUTO position, and which will take the blower out of service when in the OFF position. Provide a RESET pushbutton to reset the alarm condition.

Provide a RUNNING pilot light to illuminate GREEN when the blower is running. Provide two HOUR METER to accumulate the total run time of each blower.

Provide a FAIL pilot light to illuminate RED when the pump has failed.

Provide two 30-ampere, 3-pole, thermal magnetic, pad-lockable circuit breakers as a motor disconnects.

Provide one 15-ampere, 1-pole, thermal magnetic circuit breaker and a WP 15-ampere duplex receptacle inside the Control Panel. Provide a 15-watt fluorescent fixture with a door switch wired to turn the light ON when the panel door is opened.

Provide 15-ampere, 1-pole thermal magnetic circuit breaker, thermostat and appropriately sized heating element to maintain the interior temperature to a minimum of 40°F with an ambient temperature of 10°F.

Provide Seal-Offs for all conduits between the blowers and the Control Panel. Wiring methods between the blowers and the Control Panel shall be in compliance with NEC 501.10. Wiring methods between

INFORMATIONAL COPY ONLY - NOT FOR BIDDING PURPOSES

flow meter sensor and flower meter transmitter shall be in compliance with NEC 501.10. Contractor shall use RGS conduit.

7-13.12(7)B Condensate Control Panel

Existing Control Panel information is available by written request.

The Control Panel shall contain a barriered section, which shall contain Intrinsically Safe Relays connected to the float switches in the pump station. The Control Panel shall also contain a size 1, 2-pole starter for operating the submersible pump. Provide Machine Tool type relays, interconnected, to accomplish the following functions:

1. Start the pump when the High (#2) float is activated.
2. Stop the pump when the Low (#1) float is activated.
3. Stop the pump (redundant) when the High Alarm (#3) float is activated – and activate the rotating beacon on top of the Control Panel and audible alarm.

Provide a Rotating Beacon on top of the Control Panel, provide a relay to seal-in the alarm condition until a reset button is depressed.

Provide a Hand/Off/Auto (HOA) switch, which shall operate the pump continuously when in HAND and via float control when in AUTO position, and which will take the pump out of service when in the OFF position. Provide a RESET pushbutton to reset the alarm condition.

Provide a RUNNING pilot light to illuminate GREEN when the pump is running. Provide a HOUR METER to accumulate the total run time of the pump.

Provide a FAIL pilot light to illuminate RED when the pump has failed.

Provide a 20-ampere, 2-pole pad-lockable circuit breaker as a motor disconnect. Provide a 15-ampere, 1-pole circuit breaker and a WP 15-ampere duplex receptacle inside the Control Panel. Provide a 15-watt fluorescent fixture with a door switch wired to turn the light ON when the panel door is opened. Provide 15-ampere, 1-pole circuit breaker, thermostat and appropriately sized heating element to maintain the interior temperature to a minimum of 40°F with an ambient temperature of 10°F.

Provide Seal-Offs for all conduits between the condensate manhole and the Control Panel. All conduits between the condensate manhole and the Control Panel shall be galvanized rigid steel. The Feeder conduit shall be Schedule 80 PVC except shall be GRS to within 5 feet of the Power Source and Control Panel.

Provide Float Switches integrally mounted within the float and connected to a terminal box by a waterproof electric cable. A movable weight shall be mounted on the cable to keep the cable immersed in the liquid. The switch operating levels shall be easily adjusted by moving the weight along the cable or altering the height of the cable fixing point. The switch covering shall be made of indestructible polypropylene material. The cables shall be PVC coated, and shall be long enough to reach to the Control Panel. The switches shall be reversible such that the switching action operates on rising and falling level. The float shall be rated for 150 psi pressure and 140°F temperature. The switches shall be rated for 250 volts ac or dc and 5 amperes minimum. Provide intrinsically safe relays (ISR) for switches manufacturer shall be Flygt Corporation, Consolidated Electric Company, or equal. Mount float switches in the condensate manhole using stainless steel hardware set into manhole walls and/or top.

INFORMATIONAL COPY ONLY - NOT FOR BIDDING PURPOSES

7-13.12(8) Testing

The Contractor shall demonstrate to the Engineer proper operation of the blowers, flow meter, condensate pump, CM-2, along with activating the alarm beacons, and activating the audible alarms.

Perform insulation resistance tests on circuits to be energized with a line-to-neutral voltage of 120 volts or more. Make these tests after all equipment has been connected, except that equipment which may be damaged by the test voltage shall not be connected. Test the insulation with a 500 Vdc insulation-resistance tester with a scale reading 100 megohms. The insulation resistance shall be 20 megohms or more. Submit results for review.

Insulation resistance testing shall be performed on the following:

1. Power conductor between Panel P1 and Blower Control Panel
2. Power conductor between Blower Control Panel and Blower Motor (BL-1)
3. Power conductor between Blower Control Panel and Blower Motor (BL-2)

With blower Control Panel disconnect switch in the OFF position, measurements and record the branch circuit voltage at the blower Control Panel input power connections. Submit L-L and L-G voltage measurements.

7-13.12(9) Circuit Breakers, Switches and Surge Protection Device

In Panel P-1 provide a 50A, 3 pole circuit breaker with the same interrupting rating as the main circuit breaker for the Blower Control Panel.

In Panel P-1 use the spare 50A, 3 pole circuit breaker for the overload protection and disconnecting means of the Surge Protection Device (SPD-1).

Provide 480V, 30A, 3 Pole, fused heavy duty safety switch, rated NEMA 4X. The 30A fuses shall be time delay rated for motor loads. The fused safety switch shall be located on the new equipment panel mounting rack, near the Blower Motor Control Panel but on the rear side, similar to the safety switch used for the adjacent Condensate Pump Control Panel.

Provide Surge Protection Device (SPD) for Panel P-1. Acceptable SPD is Mersen STXT Series, Catalog number STXT480Y20A or pre-approved equal.

Locate Surge Protection Device near Panel P-1 to keep wire length short as possible. Wire length shall be less than 18 inches between SPD and circuit breaker in Panel P-1. Mount SPD using framing channel and stainless-steel fasteners. Provide identification label for SPD-1.

7-13.12(10) Power System Study

The Contractor shall submit an Arc Flash Report prepared, stamped, and signed by an electrical engineer registered in the State of Washington.

Contractor shall provide Arc Flash warning labels for the following 480V equipment:

1. Panel P-1 (Existing)
2. Leachate Pump Control Panel (Existing)
3. Disconnect Switch DS2-1 (Existing)
4. Disconnect Switch DS3-1 (Existing)
5. Disconnect Switch DS4-1 (New)
6. Blower Control Panel (New)

INFORMATIONAL COPY ONLY - NOT FOR BIDDING PURPOSES

Arc Flash Report shall be submitted as follows:

1. Two paper copies
2. One electronic copy provided in portable document format (pdf) with text-searchable capability.

Arc Flash warning labels shall be as follows:

1. adhesive-backed labels
2. identify approach boundaries
3. identify incident energy level
4. identify minimum PPE when servicing equipment within the arc flash boundary.

Contactor shall clean equipment surface with isopropyl alcohol and let surface dry before applying the adhesive backed arc flash warning labels.

7-13.12(11) Underground Electric Work

Duct Banks:

1. Swab underground conduits to remove foreign debris prior to installation of conductors. Spare and empty conduits shall be protected with threaded plugs to prevent dirt and debris from entering the conduit or manholes.
2. Underground conduit shall be sloped a minimum of 2 inches per 100 feet. Grade may be from manhole to manhole or from a highpoint between manholes. Slope all conduit to drain to manholes or pull boxes.
3. Terminate conduit in end bells in manholes.
4. Changes in direction of over 10 degrees shall be with long sweep bends. Manufactured bends may be used at the manholes for runs under 100 feet. Minimum radii for conduit under 3 inches shall be 18 inches. For conduit 3 inches and larger, minimum radii shall be 36 inches.
5. For conduits in duct banks, place conduit separators every 4 feet on centers and securely anchor to prevent conduit movement during backfilling.
6. Encase duct banks with red concrete where encased ducts are shown on the Plans. All conduit joints shall be staggered by at least 6 inches. In roadways or driveways reinforce duct bank with minimum No. 4 size bar. Reinforcement to include (4) #4 longitudinal bars located at the corners of the duct bank and 4" hoop ties at 24" centers. Maintain 2 inches of clearance from the ducts to the longitudinal bars. Provide 2" of concrete cover over the reinforcing hoop ties. Place at least 3 inches of concrete on all sides of the conduit for non-reinforced duct banks.

7-13.12(12) Grounding

Ground all equipment for which a ground connection is required per ANSI C1 whether not specifically shown on the Drawings.

Provide a ground wire in every power and control conduit.

Make embedded or buried ground connections, taps and splices with exothermic welds.

Effectively bond structural steel supports for panels to the grounding system.

INFORMATIONAL COPY ONLY - NOT FOR BIDDING PURPOSES

7-13.12(13) Power Outage

Contractor shall coordinate with Owner to schedule a power outage requirement for the electrical work at Panel P-1.

7-13.12(14) Panelboard

Proved circuit breakers shall have indicating handles with ON, OFF, and TRIPPED indication. They shall have inverse-time-current characteristic action. All multiple-pole circuit breakers shall be designed so that an overload on one pole causes all poles to open. Circuit breakers shall meet NEMA AB1. Circuit breakers shall be padlockable in the "OFF" position without the use of additional accessories.

7-13.12(15) Field Tests

The Contractor shall prepare and submit a Field-Testing Procedures 30 business days prior to Testing.

Contractor shall coordinate with equipment providers to obtain Field-Testing Procedures for equipment / systems.

Field-Testing Procedure shall include but not limited to the following:

1. Conductor Insulation Resistance Testing
2. Blower Control Panel Testing
3. Blower Testing
4. Flow Meter Testing

Contractor shall coordinate with equipment providers to obtain field testing procedures for equipment / systems.

Give 48-hour notice to the Engineer prior to any test to permit witnessing the test.

Retesting will be required for all unsatisfactory tests after the equipment or system has been repaired. Retest all related equipment and systems if required by the Engineer. Repair and retest equipment and systems that have been satisfactorily tested but later fail, until satisfactory performance is obtained.

Putting Equipment and Cables into Service: Submittal and favorable review of the specified factory and field tests shall occur before the Contractor is permitted to place the respective equipment or cable into service.

Miscellaneous Tests:

1. Insulation Resistance, Continuity, Rotation: Perform routine insulation resistance, continuity and rotation tests for all distribution and utilization equipment including all motors 1/2 horsepower and larger prior and in addition to tests performed by the testing laboratory specified herein. Supply a suitable and stable source of test power to the test laboratory at each test site. The testing laboratory shall specify requirements. Notify the testing laboratory when equipment becomes available for acceptance tests. Work shall be coordinated to expedite project scheduling. All testing shall be performed in the presence of the Engineer. The testing laboratory shall be responsible for implementing all final settings and adjustments on protective devices and tap changes. Any system material or workmanship, which is found defective on the basis of acceptance tests, shall be reported directly to the Engineer. The testing laboratory shall maintain a written record of all tests and upon completion of project, assemble and certify a final test report.

INFORMATIONAL COPY ONLY - NOT FOR BIDDING PURPOSES

2. Motor Current: Measure and record current in each phase for each new motor. Include measurement of the motor terminal voltages and motor currents when the motor is being operated at normal operating loads.

3. Operational Tests: Operationally test all circuits to demonstrate that the circuits and equipment have been properly installed, adjusted and are ready for full-time service. Demonstrate the proper functioning of circuits in all modes of operation, and including alarm conditions.

   a. The Contractor shall provide start-up services from the manufacturer of the system. The Contractor shall insure the system is operational and is ready for start-up and troubleshooting, thus the pump and fittings are installed, and control panel is connected to power. The Contractor shall notify the Owner/Engineer at least 48 hours prior to start-up.

   b. A start-up report shall be provided to the Owner/Engineer and include all component settings and motor operating characteristics. The report shall certify the system has been properly installed, or note any found deficiencies that need to be corrected.

7-13.12(16) Training

The Contractor shall provide training for Owner's operation and maintenance personnel by factory authorized instructors. Training shall include classroom and hands on sessions of 4 hours each for up to two shifts of personnel. The training manuals shall be the manufacturers favorably reviewed Operations and Maintenance Manuals. The Owner shall be notified 4 weeks in advance of the scheduled training days. Training sessions may not be scheduled until the O and M manuals have received final approval.

A startup report shall be provided to the Owner/Engineer and include all component settings and motor operating characteristics. The report shall certify the system has been properly installed, or note any found deficiencies that need to be corrected.

A complete operations and maintenance manual with index for the system shall be provided. Information shall include manufacturer's contact list, equipment list, equipment cut sheets, parts breakdown, control panel information and electrical drawings, and a troubleshooting guide. Also, the manual shall be accomplished by a spare list suggested by the manufacturer and current price information.

7-13.13 MEASUREMENT

Measurement shall be as follows:

1. No specific unit measurement shall apply to the lump sum item for "Electrical and Control Systems."

7-13.14 PAYMENT

Payment shall be as follows:

1. "Electrical and Control Systems," per Lump Sum.

   All work associated with the materials and labor associated with the "Electrical and Control Systems," including blower control panel (load center), and blower panel support; level controls; overload relays; cable fittings; flow meter and controller connections, power electrical components; trenching; facility and service conduits; hand holes; and other requirements of the system. This includes, but is not limited to, all costs for labor, materials, tools, equipment, permitting, inspections, equipment, and services required to complete the furnishing, installation, wiring connection, calibration,

INFORMATIONAL COPY ONLY - NOT FOR BIDDING PURPOSES

adjustments, testing, training, startup, and operation of all electrical equipment, devices, and components.

This work also includes the installation of the electrical service within the existing conduit from an existing power south of the landfill to the flare facility, as shown on the Plans.

This work also includes the removal and replacement of the condensate Control Panel.

END OF DIVISION 7

INFORMATIONAL COPY ONLY - NOT FOR BIDDING PURPOSES

INFORMATIONAL COPY ONLY - NOT FOR BIDDING PURPOSES

DIVISION 8
MISCELLANEOUS CONSTRUCTION

8-05 GEOSYNTHETICS

8-05.1 DESCRIPTION

This work consists of installing the geosynthetics for the Phase 3 Development area. The geosynthetics to be installed in Phase 3 includes a GCL and a double-sided textured 60-mil HDPE geomembrane overlain with a geotextile cushion layer on the bottom of the cell as shown on the Plans. This work also includes installation of anchor trenches, berms, liner repair (if required), and such other work necessary to install the geosynthetics. All work shall be in strict accordance with the Specifications, as shown on the Plans, and as directed by the Engineer.

8-05.2 MATERIALS

Materials shall meet the requirements of the following sections:

Hydraulic Conductivity Testing	9-37.1(A)
Interface Friction Angles	9-37.1(B)
Geomembrane Testing	9-37.1(C)
Geomembrane Field Testing	9-37.1(D)
Geosynthetic Clay Liner	9-37.2
Geomembrane: 60-mil Textured HDPE	9-37.3
Geotextile	9-37.4

8-05.3 TESTING

Testing shall meet the requirements of the following Sections:

Geosynthetics Testing Laboratory	8-05.5(1)
Geomembrane Conformance Testing	8-05.5(2)B
Geomembrane Field Testing	8-05.5(2)B

8-05.4 QUALIFICATIONS

8-05.4(1) Manufacturers

The Contractor shall provide geosynthetics manufactured by manufacturers with the following minimum qualifications:

The GCL manufacturer shall have at least five continuous years' experience in the manufacture of GCLs, and shall have manufactured a minimum of 25 million square feet of GCL prior to producing materials for this project.

The geomembrane manufacturer shall have at least 5 continuous years' experience in the manufacture of high-density polyethylene (HDPE) geomembranes, and shall have manufactured a minimum of 25 million square feet of HDPE geomembrane prior to producing materials for this project.

The geotextile manufacturer shall have produced at least 25 million square feet of each type of geotextile meeting the specifications for this project prior to producing materials for this project.

INFORMATIONAL COPY ONLY - NOT FOR BIDDING PURPOSES

8-05.4(2) Installers

The Contractor shall provide for geosynthetics installation by installers with the following minimum qualifications:

The geomembrane installer's personnel shall have successfully installed at least 25 million square feet of HDPE geomembrane prior to installing geomembrane for this project. Submit a list of at least 10 completed projects. For each installation, provide name, type, location of facility, facility contact and phone number, date of installation, description, type, and quantity of geosynthetic materials installed. The installers quality control program shall be submitted.

The supervisor for the geomembrane installer (Master Seamer) shall have supervised the installation of at least 25 million square feet of HDPE geomembrane, which have been incorporated into environmental barrier layers, prior to installing geomembrane for this project. The Master Seamer shall have current International Association of Geosynthetic (IAG) Certified Welding Technician (CWT) certified in both extrusion and fusion welding.

A QC Tester shall be assigned to collect and test all samples. The QC Tester shall not be the Master Seamer. The QC Tester shall meet the same qualifications as the Master Seamer with the experience requirement reduced to 5 million square feet.

The GCL and geotextile cushion layer, shall be installed by the geosynthetic installer under the direction of the Master Seamer.

8-05.4(3) Meetings

Prior to and during construction of the geosynthetic materials, construction meetings will be held. The meetings shall be attended by the Owner, CQA Engineer, Contractor, and Geosynthetic Installer.

Topics for the meetings shall include the following:

A. Responsibilities of each party.

B. Lines of authority and communication. Resolution of any project document ambiguity.

C. Methods for documenting, reporting, and distributing documents and reports.

D. Procedures for packaging and storing archive geomembrane samples.

E. Review of time schedule for all installation and testing.

F. Review of panel layout and numbering systems for panels and seams including details for marking on geomembrane.

G. Procedures and responsibilities for preparation and submission of as-built panel and seam drawings.

H. Temperature and weather limitations. Installation procedures for adverse weather conditions. Defining acceptable subgrade geosynthetic, or ambient moisture and temperature conditions for working during installation.

I. Subgrade conditions, dewatering responsibilities, and subgrade maintenance program.

J. Deployment techniques including allowable subgrade for the geosynthetics.

K. Plan for controlling expansion/contraction and wrinkling of the geosynthetics.

L. Covering of the geosynthetics and cover soil placement.

M. Surveying of the geosynthetic limits and geomembrane panels panel numbers, and seams.

INFORMATIONAL COPY ONLY - NOT FOR BIDDING PURPOSES.

8-05.5 SUBMITTALS

The Contractor shall submit the information specified in the following subsections in accordance with Sections 8-05.5(1) and 8-05.5(2) within 10 days after the Notice to Proceed is received, unless otherwise specified. The conformance samples shall be obtained as described in ASTM D 4354 and ASTM D 4759. All submittals in this subsection are for Engineer approval.

8-05.5(1) Geosynthetic Testing Laboratory

The CONTRACTOR shall submit accreditation from an independent third-party laboratory selected for the geosynthetic testing. The laboratory shall be NICET certified. The ENGINEER shall make a determination of the acceptability of the selected laboratory within three working days of the submittal.

8-05.5(2) Geosynthetics

8-05.5(2)A Geosynthetic Clay Liner

Manufacturer's certification that material meets project specifications and quality control certificates for each roll produced and delivered to the project. Testing results not meeting the requirements in Section 9-37.2 will result in rejection of the applicable rolls. Certified test results shall be provided seven (7) days prior to delivery to the site.

1. A copy of the product specifications sheet listing all testing methods and property values.
2. Qualifications statement of manufacturer.
3. Qualifications statement of installer.
4. Results of tests conducted Manufacture warranty meeting the requirements of Section 8-05.7.
3. Samples and product descriptions for GCL.
4. Manufacturer's certification that material meets project specifications.
5. Quality control certificates for each roll produced seven days prior to material delivered to the site.
6. Manufacture and installation procedures and quality control program, including a plan for protecting the work, and for repairing and replacing damaged work.
7. Details, methods, and materials for overlapping; installing around boots and penetrations, and making GCL repairs.
8. Friction angle test results.

8-05.5(2)B Geomembrane

Manufacturer's certified raw material and sheet material data sheets along with a copy of quality control certificates. Testing results not meeting the requirements in Section 9-37.3 will result in rejection of the applicable rolls. Certified test results for each HDPE product shall be provided seven (7) days prior to delivery to the site.

1. Qualifications statement of manufacturer.
2. Qualifications statement of installer.
3. Resin suppliers name, resin production plant identification, resin brand name number, production date of the resin, resin manufacturer's quality control certification, and certification that the properties of the resin meet the requirements of the project.

INFORMATIONAL COPY ONLY NOT FOR BIDDING PURPOSES

4. Resume of installation supervisor.
5. Manufacturer and installer warranty meeting the requirements of Section 8-05.7.
6. Samples and product descriptions for geomembrane, penetrations, and associated appurtenances.
7. A material properties sheet, including at a minimum all properties specified in GRI GM 13, including test methods used.
8. Quality control certificates issued by the resin supplier, quality control certificates for each roll produced, certification that geomembrane and extrudate produced for this project have the same material properties, seven days prior to material delivered to the site.
9. Manufacture and installation procedures and quality control program, including a plan for protecting the work, and for repairing and replacing damaged work.
10. Proposed installation panel layout identifying panels, seams and anticipated sequence.
11. Details, methods, and materials for making field joints; constructing and installing boots around penetrations; and making geomembrane repairs. A shop drawing shall be submitted for shop fabricated geomembrane boots.
12. Friction angle test result. Field tensiometer certification.
13. One (1) 12-inch by 12-inch minimum geomembrane sample.
14. Record drawings (as-builts) of the panel layout, prior to final payment.

Geomembrane Conformance Testing. The CONTRACTOR shall submit the results of the geomembrane testing required in Section 9-36.1(C) prior to delivery of the geomembrane to the site. The testing shall be on material taken from representative samples of the rolls to be delivered.

Geomembrane Field Testing. The CONTRACTOR shall submit the results of geomembrane seam testing as required in this Section and in Section 9-36.1(D) within 24 hours of the sample being sent to the laboratory. Environmental stress crack resistance shall be submitted within 14 days of the sample being sent to the laboratory.

Interface Friction Angle Testing. The CONTRACTOR shall submit the results of the geosynthetic friction angle testing for the landfill required in Section 9-37.1(B) prior to installation or construction of the liner system. The GCL [Section 9-37.1] and geomembrane samples shall be saved and given to the ENGINEER upon completion of the testing. The direction of testing shall be marked on the samples.

8-05.5(2)C Geotextile Cushion Layer

1. Qualifications statement of manufacturer.
2. Samples and product description for each type.
3. Manufacturer's certification that material meets project specifications.

8-05.5(3) Quality Control Reports

The geosynthetic installer shall submit, on a daily basis, the following reports. The geosynthetic installer will not be allowed to begin work until the previous day's reports are submitted to the Engineer.

1. Daily progress reports including the following:
   - Project name
   - Date

INFORMATIONAL COPY ONLY - NOT FOR BIDDING PURPOSES

- Weather conditions, including range of wind speed and temperature, cloud cover, and precipitation
- Panels installed
- Panels seamed
- Field Observations

2. Daily quality control records detailing the initial weld qualification of equipment and welding crews and destructive seam testing results, including, but not limited to, the following:
   - Project name
   - Date
   - Weld crew/machine identification
   - Qualification results
   - Destructive test results
   - General observations
3. Subsurface Certification: The installer shall supply written certification that the surface on which the GCL and geomembrane will be installed is acceptable. After the underlying layers/materials has been accepted, it shall be the installer's responsibility to indicate to the Contractor and the Engineer any change to its condition due to natural causes or any other occurrences that may require repair work.

8-05.6 CONSTRUCTION REQUIREMENTS

No layer of geosynthetic shall be covered until the geosynthetic installer and the Engineer have inspected and the Engineer has written approval from the geosynthetic installer of the installation.

No vehicular traffic shall travel on the geosynthetics other than approved low ground pressure All Terrain Vehicles (ATVs), or equivalent.

Liner installer shall minimize human and vehicular traffic, especially on the sideslopes, due to the nature of the existing subgrade material. Geosynthetic installer shall travel only on previously installed materials to reduce damage and repairs to the subgrade.

8-05.6(1) Geosynthetic Clay Liner

8-05.6(1)A Packaging, Labeling, Shipping, Storage and Handling

Each roll of GCL shall be uniquely marked by the manufacturer identifying the roll number and date of manufacture. Labels on each roll shall identify the material, roll number, the length and width of the roll, and manufacturer.

The GCL rolls shall be stored elevated on a smooth, flat, non-abrasive surface and stacked no more than four high. The Contractor shall protect the GCL rolls at all times from moisture, ultraviolet light, and any cause of damage. The Contractor shall replace GCL damaged by any means at the Contractor's expense, including wind and water damage at any time.

INFORMATIONAL COPY ONLY - NOT FOR BIDDING PURPOSES

8-05.6(1)B Installation

Installation shall be performed under the constant direction of a single master seamer who shall remain on-site at all times during the installation and be in responsible charge for all GCL installation, including panel layout, seaming, patching, testing, and all other activities associated with the installation.

The subgrade (GCL bedding layer) under the GCL shall be compacted smooth and free of all rocks, stones, sticks, roots, sharp objects, or debris of any kind. The surface shall provide a firm, unyielding foundation with no sudden, sharp, or abrupt changes or break in grade. There shall be no divots in the GCL bedding layer greater than 1-inch. Additional subgrade preparation may be required prior to and during the installation of GCL due to GCL installation techniques and activities. No standing water or excessive moisture will be allowed. Prior to placing GCL over sections of prepared GCL bedding layer, the master seamer shall certify, in writing, that the receiving surface is acceptable. It shall be the responsibility of the Contractor to prepare and keep the receiving surfaces in acceptable condition until complete installation of the GCL is accomplished.

All GCL bedding layer damaged by construction equipment or personnel, and deemed unsuitable for GCL deployment and placement shall be repaired prior to placement. All GCL bedding layer repairs shall be approved by the Installer. This damage and repair shall be the responsibility of the Contractor.

The Contractor shall excavate and backfill the anchor trenches for the geosynthetics as shown on the Plans. Any damage caused by the Contractor during excavation shall be repaired by the Contractor at no cost to the Owner. The GCL shall be overlapped a minimum of 3 feet onto the existing compacted soil liner, or as indicated on the Plans, or as directed by the Engineer.

GCL rolls shall be delivered to the working area of the site in their original packaging. Immediately prior to deployment, the packaging shall be carefully removed without damaging the GCL. The orientation of the GCL (i.e., which side faces up) should be in accordance with the manufacturer's recommendations. The side to be placed up shall be the same as selected for the interface friction angle testing.

Equipment, which could damage the GCL, shall not be allowed to travel directly on it. If the installation equipment causes rutting of the bedding layer, the bedding layer shall be restored to its originally accepted condition before placement continues.

Care must be taken to minimize the extent to which the GCL is dragged across the bedding layer in order to avoid disturbing the bedding layer and damaging the bottom surface of the GCL. Any dislodging of stones in the GCL bedding layer caused by dragging the GCL, shall be removed by the Installer. A temporary geosynthetic covering commonly known as a slip-sheet or rub sheet may be used to reduce friction and damage during placement.

The GCL shall be placed so that seams are parallel to the direction of the slope. Seams should be located at least 3 feet from the toe and crest of slopes steeper than 4H: 1V. If seams are required, adjacent panels shall not have seam within 10 feet of each other.

All GCL panels shall lie flat on the underlying surface, with no wrinkles or folds, especially at the exposed edges of the panels.

Only as much GCL as can be covered at the end of the working day with the geomembrane shall be deployed, or a temporary waterproof tarpaulin shall be used. The GCL shall not be left uncovered overnight. If the GCL is hydrated when no confining stress is present, the Contractor shall remove and replace the hydrated material.

The GCL seams shall be constructed by overlapping their adjacent edges. Care should be taken to ensure that the overlap zone is not contaminated with loose soil or other debris. Supplemental bentonite is required if the GCL has one or more non-woven needle-punched geotextiles.

INFORMATIONAL COPY ONLY - NOT FOR BIDDING PURPOSES

The minimum dimension of the longitudinal overlap shall be 9 inches. End-of-roll overlapped seams should be similarly constructed, but the minimum overlap shall measure 24 inches. Seams at the ends of the panels shall be constructed such that they are shingled in the direction of the grade to prevent the potential for runoff flow to enter the overlap zone. Heated bonding of the overlapped seams shall be performed if panels move during installation of the GCL and/or overlying geomembrane.

Bentonite-enhanced seams are constructed between the overlapping adjacent panels described above. The underlying edge of the longitudinal overlap is exposed, and then a continuous bead of granular sodium bentonite is applied along a zone defined by the edge of the underlying panel and the 6-inch line. A similar bead of granular sodium bentonite is applied at the end-of-roll overlap. The bentonite shall be applied at a minimum uniform application rate of 1/4-pound per lineal foot.

The GCL shall be sealed around penetrations and embedded structures in accordance with the design drawings and the GCL Manufacturer.

If the GCL is damaged (torn, punctured, perforated, etc.) during installation, it shall be repaired by cutting a patch to fit over the damaged area. The patch shall be obtained from a new GCL roll and shall be cut to size such that a minimum overlap of 12 inches is achieved around all of the damaged area. Dry bentonite or bentonite mastic shall be applied around the damaged area prior to placement of the patch. It may be desirable to use an adhesive to affix the patch in place so that it is not displaced during geomembrane placement.

8-05.6(2) Geomembrane

8-05.6(2)A Packaging, Labeling, Shipping, Storage and Handling

Each roll of geomembrane shall be uniquely marked by the manufacturer identifying the roll number and date of manufacture. Labels on each roll shall identify the material, roll number, thickness of the material, the length and width of the roll, and manufacturer.

The geomembrane rolls shall be stored elevated on a smooth, flat, non-abrasive surface, and stacked no more than two high. The Contractor shall protect the geomembrane rolls at all times from dirt, grease, moisture, heat, and any cause of damage. The Contractor shall replace geomembrane damaged by any means at the Contractor's expense, including wind damage at any time.

8-05.6(2)B Installation

Installation shall be performed under the constant direction of a single master seamer who shall remain on-site at all times during the installation and be in responsible charge for all geomembrane installation, including panel layout, seaming, patching, testing, and all other activities associated with the installation.

Prior to placing geomembrane over sections of the GCL, the master seamer shall certify in writing that the receiving surface is acceptable. It shall be the responsibility of the Contractor to prepare and keep the receiving surfaces in acceptable condition until complete installation of the geomembrane is accomplished. A temporary geosynthetic covering known as a slip sheet or rub sheet should be used to minimize friction during placement and to allow the textured geomembrane to be more easily moved into its final position.

The Contractor shall excavate and backfill the anchor trenches for the geosynthetics as shown on the Plans. The Contractor shall excavate the existing geomembrane edges for connection. Any damage caused by the Contractor during excavation shall be repaired by the Contractor at no cost to the Owner.

Geomembrane deployment shall proceed when liner temperatures are between 32°F to 104°F as measured by an infrared thermometer or thermocouple. Contractor shall have one operating temperature device on-site during the deployment and installation of the geomembrane and shall document the temperature every

INFORMATIONAL COPY ONLY - NOT FOR BIDDING PURPOSES

two hours. Placement can proceed below 32°F or above 104°F only after it has been verified by the Engineer that the material can be seamed according to the specification. Geomembrane placement or seaming shall not be done during any precipitation, in the presence of excessive moisture (e.g., fog, rain, dew), during dusty periods or in the presence of excessive winds.

The geomembrane shall be installed to the limits indicated on the Plans. The geomembrane shall be placed in such a manner to minimize field seaming. The geomembrane shall be installed such that field seams run longitudinally down slopes steeper than 10 percent. The Contractor shall provide temporary wind anchorage during geomembrane installation. Only geomembrane panels for each day's field seaming shall be spread each day. The ends of geomembrane installed each day shall be buried in an anchor trench or covered with soil.

As geomembrane materials are unrolled, the Contractor shall perform further visual inspection of the geomembrane surface. If damage or faults not previously observed are discovered, they shall be clearly marked and repaired. All rips, tears, puncture, or other injuries to the geomembrane shall be repaired as required in Section 8-05.6(2)D. The Contractor shall note if the texturing is or is not consistent across the sheet and if the texturing is not consistent with the sample submitted for friction angle analysis.

All seams shall be made by extrusion or fusion welding. The completed joints shall have a minimum bonded seam strength in **shear of 120 pounds per inch and in peel of 78 pounds per inch** when tested in accordance with ASTM D 6392. **The seam shall also fail as a film tear bond**. Incursion shall not exceed 10 percent (10%) of the welded area.

All polyethylene seams shall be fusion welded using double wedge welding techniques separated by an air space. The Contractor shall use only welding apparatus on which proper control of extrudate or wedge temperature, apparatus pressure, welding speed, width of weld, and sheet preheating temperature can be maintained. The seams shall have edges that are at least one-half inch wide to allow for testing. The Contractor will verify that the welding apparatus meets these requirements. Fusion field seams shall be made by overlapping adjacent sheets a minimum of 3 inches and forming a double welded seam separated by an air space. Fusion field seams shall be produced by a double hot shoe welder capable of maintaining a recordable temperature.

Extrusion welds will be made by overlapping adjacent sheets a minimum of 3 inches and extruding a ribbon of hot fusion-joint material no less than 1 inch in width between the overlapped sheets or over the seams between the lapped sheets, as required. Extrusion weld material shall be of the same material as the geomembrane. The surface of the geomembrane liner sheet shall be roughened by an acceptable means before extrudate is placed between overlapping sheet or over the lapped seam. Excessive grinding resulting in grooving of the liner or reducing the liner thickness greater than 10 percent shall not be permitted.

No geomembrane shall be covered until all inspections, field tests, repairs, and the geomembrane survey are satisfactorily completed. Where the installer's or Engineer's laboratory tests indicate a failure for a destructive test, the seam shall be repaired as required in Section 8-05.6(2)D.

The geomembrane installer shall prepare record drawings of the completed geomembrane panel layout. The record drawings will detail and show dimensions and location of each panel, geomembrane penetration, destructive test location, and repairs. The record drawings will also include any changes to the geomembrane details on the Plans.

INFORMATIONAL COPY ONLY - NOT FOR BIDDING PURPOSES

8-05.6(2)C Quality Control Testing

Quality control testing of the geomembrane seams shall be performed by the installer and shall include qualification test seams, non-destructive seam testing, and destructive seam testing. The installer shall have on-site a certified tensiometer to test seam samples in peel and shear. All samples shall be cut with a die cutter.

Qualification Test Seams

Field test seams shall be conducted on the geomembrane to verify that seaming conditions are satisfactory. Test seams shall be conducted for each crew at the beginning of each seaming period, at the Engineer's discretion, and at least once each 4 hours, or 40 minutes if idle, for each seaming apparatus used.

All test seams shall be made at a location in the area of the anticipated seaming and in contact with the subgrade. The test seam samples shall be as long as necessary for the wedge weld to go through one temperature cycle for hot shoe welding and for extrusion welding with the seam centered lengthwise. Specimens 1-inch wide shall be cut from each end and the middle (lowest temperature of welder) of the test seam with a die cutter at locations identified by the Engineer. The installer shall supply and use the on-site certified tensiometer to test these specimens for shear and peel. If a test specimen fails to meet field seam specifications, the seaming apparatus and seamer shall not be accepted and shall not be used for seaming until the deficiencies are corrected and two consecutive successful full test seams are achieved.

Non-Destructive Seam Testing

The installer shall non-destructively test all field seams with a vacuum box or air pressure testing (for double fusion seams only) over their full length in accordance with GRI Test Method GM6, and ASTM D 5641.

Air Channel Pressure Test. Air pressure testing for double-fusion seams shall be performed in-place of vacuum box tests. The following procedures shall be followed by the installer to perform air pressure testing:

1. Seal both ends of the seam to be tested.
2. Insert needle or other approved pressure feed device into the tunnel created by the double wedge fusion weld.
3. Energize the air pump to a pressure between 28 and 30 psi, close valve, and sustain pressure for approximately 5 minutes.
4. If loss of pressure exceeds 4 psi, or pressure does not stabilize, locate faulty area, repair, and retest.
5. Relieve pressure at end opposite pressure gauge to check for continuity of air channel.
6. Remove needle or other approved pressure feed device and seal holes with an extrusion weld.
7. Results of the pressure testing shall be recorded on the geomembrane at the seam tested with the date tested, times of the test, the name of the technician performing the test, and the results of the test.

INFORMATIONAL COPY ONLY - NOT FOR BIDDING PURPOSES

Vacuum Box Test. The following procedures shall apply to locations where seams cannot be non-destructively tested or for extrusion welded seams, as determined by the Engineer:

1. Equipment for testing extrusion seams shall be comprised of but not limited to: a vacuum box assembly consisting of a rigid housing, a transparent viewing window, a soft rubber gasket attached to the base, port hole or valve assembly and a vacuum gauge: a vacuum pump assembly equipped with a pressure controller and pipe connections; a rubber pressure/vacuum hose with fittings and connections; a plastic bucket; wide paint brush or mop; and a soapy solution.
2. The vacuum pump shall be charged and the tank pressure adjusted to approximately 5 psig.
3. The Installer shall create a leak tight seal between the gasket and geomembrane interface by wetting a strip of geomembrane approximately 12 inches by 48 inches (or length and width of box) with a soapy solution, placing the box over the wetted area, and then compressing the box against the geomembrane. The Installer shall then close the bleed valve, open the vacuum valve, and maintain initial pressure of approximately 5 psig for approximately 5 seconds. The geomembrane should be continuously examined through the viewing window for the presence of soap bubbles, indicating a leak. If no bubbles appear after 5 seconds, the area shall be considered leak free. The box shall be depressurized and moved over the next adjoining area with a 6-inch overlap and the process repeated.
4. All areas where soap bubbles appear shall be marked, repaired, and then retested. CQA Engineer shall be notified of all failures.
5. At locations where seams cannot be non-destructively tested, such as pipe penetrations, non-destructive spark testing shall be substituted.
6. All seams that are vacuum tested shall be marked with the date tested, the name of the technician performing the test and the results of the test.

Spark Test. The following procedures shall apply to locations where both air pressure testing and vacuum testing are not possible such as pipe penetrations, as determined by the Engineer:

1. Equipment for spark testing shall be comprised of but not limited to: a hand held holiday spark tester and conductive wand that generates a high voltage.
2. The testing activities shall be performed by the Installer by placing an electrically conductive tape or wire beneath the seam prior to welding. A trial seam containing a non-weld segment shall be subject to a calibration test to ensure that such a defect (non-welded segment) will be identified under the planned machine settings and procedures. Upon completion of the weld, enable the spark tester and hold one-inch above the weld moving slowly over the entire length of the weld in accordance with ASTM 6365. If there is no spark the area is considered to be leak free.
3. A spark indicates a hole in the seam. The faulty area shall be located, repaired and retested by the Installer.
4. Care should be taken if flammable gases such as landfill gas are present in the area to be tested.

INFORMATIONAL COPY ONLY - NOT FOR BIDDING PURPOSES

Destructive Seam Testing

The installer shall provide the Engineer with a minimum of one destructive test sample per 500 feet of seam length from a location specified by the Engineer. The installer shall not be informed in advance of the sample location.

Sample Procedure: In order to obtain test results prior to completion of liner installation, samples shall be cut by the installer as the seaming progresses. Sampling times and locations shall be determined by the Engineer. The Engineer must witness the obtainment of all test samples and the installer shall mark all samples with the date, time, location, panels, and seam number. The information must be on each sample portion. All holes in the geomembrane resulting from obtaining the seam samples shall be repaired. All patches shall be vacuum tested.

Size and Disposition of Samples: The samples shall be 12 inches wide by 36 inches long and the seam centered lengthwise. The sample shall be cut into two equal length pieces, with one piece given to the Engineer, and one piece retained by the installer for destructive testing on-site.

Testing: The installer shall cut ten 1-inch wide replicate specimens from his sample. The installer shall test five specimens for shear strength and five for peel strength in accordance with ASTM D 6392. The installer shall have the required certified equipment on-site in order to perform the above-mentioned tests. To be acceptable, all five replicate test specimens must meet the seam requirements specified in Section 8-05.6(2)C. Results of all field testing shall be supplied to the Engineer, in written form, at the end of each working day. The Engineer may test the samples at an independent geosynthetics laboratory.

Procedures for Destructive Test Failure: The following procedures shall apply whenever a sample fails a test:

1. The installer shall reconstruct the seam between the failed location and any passed test location.
2. The installer can retrace the welding path to an intermediate location (at a minimum of 10 feet from the location of the failed test), at the Engineer's discretion, and take a sample for an additional destructive test. If this test passes, then the seam shall be reconstructed between that location and the original failed location. This procedure shall be performed on both sides of the failed test location. If the test fails, then the process is repeated.
3. Over the length of seam failure, the installer shall either; cut out the old seam, reposition the panel and reseam or add a cap strip.
4. After reseaming or placement of the cap strip, full non-destructive testing shall be completed. Also, additional destructive field test(s) may be taken within the reseamed area. If test results are not acceptable, this process shall be repeated until the reseamed length is judged satisfactory by the Engineer.

In the event that a sample, including a sample supplied to the Engineer and tested at an independent geosynthetics laboratory, fails a destructive test, then the above procedures shall be followed, considering the failed test exclusively.

8-05.6(2)D Geomembrane Repairs

All seams and non-seam areas of the geomembrane shall be inspected by the installer and Engineer for defects, holes, blisters, undispersed raw materials, and any sign of damage or contamination by foreign matter. Because light reflected by the geomembrane helps to detect defects, the surface of the geomembrane shall be clean at the time of inspection. The geomembrane surface shall be brushed, blown, or cleaned with a moist cloth by the installer if the amount of dust or mud inhibits inspection. The Engineer shall decide if cleaning of the geomembrane is needed to facilitate inspection.

INFORMATIONAL COPY ONLY - NOT FOR BIDDING PURPOSES

Evaluation: Each suspect location in seam and non-seam areas shall be non-destructively tested as appropriate in the presence of the Engineer. Each location that fails the non-destructive testing shall be marked by the installer and repaired accordingly.

Repair Procedures: The repair of the geomembrane should be as follows:

a. Defective seams shall have the old seam cut out, reposition the panel, and reseam or add a cap as described in these specifications. Rewelding over failed seams shall not be allowed.

b. Small holes in polyethylene shall be repaired by extrusion cap welding. If the hole is larger than 1/4-inch, it shall be patched.

c. Tears shall be repaired by patching. The tear must be rounded prior to patching.

d. Blisters, large holes, undispersed raw materials, and contamination by foreign matter shall be repaired by patches.

e. Surfaces of the geomembrane, which are to be patched, shall be abraded and cleaned no more than 15 minutes prior to the repair. No more than 10 percent of the liner's thickness shall be removed.

f. Patches shall be round or oval in shape, made of the same geomembrane, and extend a minimum of 6 inches beyond the edge of defects. All patches shall be of the same compound and thickness as the geomembrane specified. All patches to be extrusion welded shall have their top edge beveled with an angle grinder prior to placement on the geomembrane. Patches shall be applied using approved seaming methods only.

g. Wrinkles, which may become folds during placement of material above the geomembrane, shall be repaired by cutting away the excess material and repairing as required above. No folding in the geomembrane is allowed. No spanning over voids in the subgrade by the geomembrane is allowed.

8-05.6(3) Geotextile Cushion Layer

8-05.5(3)A Packaging, Labeling, Shipping, Storage, and Handling

Each roll of geotextile shall be uniquely marked by the manufacturer/fabricator identifying the roll number and dates of manufacture/fabrication. Labels on each roll shall identify the material, roll number, the length and width of roll, and the manufacturer and fabricator.

The geotextile rolls shall be stored on a smooth, flat, non-abrasive surface, and stacked no more than three high. The Contractor shall protect the geotextile rolls at all times from dirt, grease, moisture, heat, sunlight, and any cause of damage. The geotextile rolls shall be left in their protective wrapping from the fabricator until deployed. The Contractor shall replace geotextile damaged by any means at the Contractor's sole expense, including wind damage at any time.

8-05.6(3)B Installation

The geotextile cushion layer shall be installed over the geomembrane for the landfill after acceptance of the geomembrane installation and geosynthetic survey by the installer and the Engineer.

The surface to receive geotextile shall be free from dust, dirt, stones, and any other objects or debris. The surface shall be free of wrinkles. The geotextile shall be installed as shown on the Plans. When installed on slopes steeper than 10 percent, longitudinal seams shall run down the slope. When the geotextile is placed on texture geomembrane, the geotextile shall not be moved or realigned once installed. A slip-

INFORMATIONAL COPY ONLY - NOT FOR BIDDING PURPOSES

sheet shall be used when moving the geotextile into place. Adjoining sections of geotextile shall have no less than a 6-inch overlap and shall be heat bonded.

The Contractor shall not operate equipment or vehicles of any kind on the geotextile. Any damaged sections of geotextile caused by wind, weather, Contractor's activities, or any other means, shall be repaired or replaced at no additional cost to the Owner.

The leachate collection layer shall be placed over the installed sections of geotextile only after written approval of the geotextile installation by the installer and the Engineer. The geotextile overlap shall be secured (heat lanced) to prevent loss of overlap when placing the leachate collection layer.

8-05.7 WARRANTY

The installer of the GCL and geomembrane materials and associated appurtenances shall warrant his workmanship to be free of defects on a non-prorata basis for two years. After acceptance of the work by the Owner, the installer shall provide all warranty work and associated costs required by the Owner at the Contractor's sole expense.

The installer shall also obtain and furnish the Owner a warranty from the GCL and geomembrane manufacturers for the materials used. The material warranty for the GCL and geomembrane shall be for defects or failure of the material for 20 years after acceptance of the work by the Owner on a prorata basis. All defects or failure of the material during the workmanship warranty period shall be repaired at the Contractor's sole expense.

8-05.8 MEASUREMENT

1. "Geosynthetic Clay Liner (GCL)", "60-mil Textured HDPE Geomembrane", and "Geotextile Cushion Layer" by the square yard. The material will be measured by horizontal measure over the area that the material was installed within the pay limits of the liner system as shown on the Plans. No adjustment for slope, containment or sideslope berms, anchor trenches, or overlaps will be made.
2. "Interim Stormwater Geomembrane Berms/North Containment Sacrificial Geomembrane", by the linear feet. The material will be measured by horizontal measure over the area that the material was installed as shown on the Plans.
3. "Geomembrane Penetrations," per each.

8-05.9 PAYMENT

1. "Geosynthetic Clay Liner (GCL)", "60-mil Textured HDPE Geomembrane," and "Geotextile Cushion Layer", by the square yard:

   The unit contract price per square yard shall be full compensation for all labor, equipment, tools, and material needed to furnish and install in-place the material, including seaming, testing, welding, overlaps, flaps, penetrations, sandbags, reporting, surveying, and repairing as needed in accordance with these Specifications.

   Anchor trenches, third-party and field geosynthetic testing, and existing liner edge repairs shall be incidental to the unit prices listed in this section.

INFORMATIONAL COPY ONLY - NOT FOR BIDDING PURPOSES

2. "Interim Stormwater Geomembrane Berms/North Containment Sacrificial Geomembrane", by the linear feet.

   The unit contract price per linear feet shall be full compensation for all labor, equipment, tools, and material needed to furnish and install in-place the material, including seaming the interim geomembrane berm panel to the bottom liner, placement of the sacrificial geomembrane, testing welding, overlaps, sandbags, reporting, surveying, and repairing as needed in accordance with these Specifications.

   Anchoring as shown on the Plans and geosynthetic testing shall be incidental to the unit price.

3. "Geomembrane Penetrations," per each. The unit contract price per each shall be full compensation for all labor, equipment, tools, and material needed to furnish and install in place the material, including seaming, welding, surveying, and repairing as needed in accordance with these Specifications.

END OF DIVISION 8

INFORMATIONAL COPY ONLY - NOT FOR BIDDING PURPOSES.

DIVISION 9
MATERIALS

9-05 DRAINAGE STRUCTURES, CULVERTS, AND CONDUITS

9-05.30 LANDFILL GAS AND LEACHATE PIPE AND FITTINGS

9-05.30(1) HDPE Material

High-density polyethylene pipe and fittings shall be made from polyethylene resin compound qualified as Type III, Category 5, Class C, Grade P34 in ASTM D1248. The HDPE pipe and fittings shall conform to Cell Classification 345464C or 355434C (ASTM D3350). Diameter shall be as shown on the Plans. This material shall have compressive yield strength of 1,600 psi when tested and analyzed by ASTM D695. This material shall have a Tensile Yield Strength of 3,200 psi when tested and analyzed by ASTM D638.

The polyethylene compound shall be suitably protected against degradation by ultraviolet light by means of carbon black, well dispersed by precompounding in a concentration of not less than 2 percent.

The manufacturer shall be listed with the Plastic Pipe Institute as meeting the recipe and mixing requirements of the resin manufacturer for the resin used to manufacture the pipe and fittings for this project.

The HDPE products shall contain no recycled compound except that generated in the manufacturer's own plant from resin of the same specifications from the same raw material supplier.

The CONTRACTOR shall submit, at the preconstruction meeting, a description of the pipe to be used which includes materials specifications provided by the manufacturer. The CONTRACTOR shall supply the manufacturer's certificate of compliance in accordance with Section 1-06.3 of the Standard Specifications prior to installing any HDPE piping.

9-05.30(2) High Density Polyethylene (HDPE) Pipe

HDPE pipe meeting the requirements of this section shall be used for the landfill gas and condensate systems, and all other piping unless specified or otherwise shown on the Plans.

The same manufacturer shall supply polyethylene pipe and fittings. Pipe and fittings from different manufacturers shall not be interchanged.

Pipe and fittings shall be of the nominal diameter shown on the Plans. All pipe sizes, either solid or perforated, shall conform to ASTM F 714.

The maximum allowable hoop stress shall be 1000 psi at 140 degrees F.

The polyethylene pipe shall be homogeneous throughout and free of visible cracks, holes, foreign inclusions, or their injurious defects. Any pipe with nicks, scrapes, or gouges deeper than 5 percent of the nominal wall thickness shall be rejected. The pipe shall be uniform in color, opacity, density, and other physical properties.

The landfill gas system pipe and fitting, unless otherwise designated on the Plans, shall conform to the following:

1. All gas manifold pipe shall have a minimum working pressure of 64 psi at 73.4 degrees F and a minimum SDR of 17.
2. LFG Wellhead's pipe shall have a minimum working pressure of 1600 psi at 73.4 degrees F and minimum SDR of 11.

INFORMATIONAL COPY ONLY - NOT FOR BIDDING PURPOSES

3. All horizontal gas trench pipe (solid and perforated) shall have a minimum SDR 17. Each 6-inch, 40-foot length of solid wall pipe shall be equipped with a 6"x 6"x 3" reducing tee on one end. The 3" and 6" connection from the tee shall be equipped with blind flange connection in accordance with Section 9-05.30(5). The 4- and 6-inch pipe perforations shall be shop fabricated and of basic configuration and dimension as follows: four (4) ¼-inch diameter holes, offset 90°, every 5 feet on-center of perforate pipe.

The leachate system pipe and fittings, unless otherwise designated on the Plans, shall conform to the following:

1. 6-inch perforated pipe: Shall have a minimum working pressure of 64 psi at 73.4 degrees F and a minimum SDR of 17. The perforations shall be four (4) 3/8-inch-diameter holes, offset 90 degrees, and spaced 4 inches on-center.
2. 3-inch leachate transfer pipe and 6-inch leachate cleanout and stormwater solid pipe: Shall have a minimum working pressure of 64 psi at 73.4 degrees F and a minimum SDR of 17.

The following information shall be continuously marked on the pipe or spaced at intervals not exceeding 5 feet:

a. Name and/or trademark of the pipe manufacturer
b. Nominal pipe size
c. Standard Dimensional Ratio (SDR)
d. PE 3408
e. Manufacturing Standard Reference
f. A production code from which the date and place of manufacture can be determined

Joints and pipe connections shall be thermal butt-fusion or electro-fusion. No mechanical couplings shall be used unless shown on the Plans or approved by the ENGINEER.

9-05.30(3) HDPE Fittings

Fittings shall be manufactured in accordance with ASTM D3261, and shall be manufactured by injection molding, a combination of extrusion and machining, or fabrication from HDPE pipe conforming to these specifications. Fittings shall be from the same manufacturer as the pipe and shall have the same or numerically smaller SDR than pipe connecting to the fitting. Fittings shall be molded, for sizes 6-inch and smaller.

All reducing tees shall be factory-molded if available as a standard item by any manufacturer having pipe and meeting these specifications. If not available as a standard item, branch saddle reducing tees shall be used. Reducers shall be shop-fabricated. Field fabricated branch saddle connections will not be allowed.

All molded fittings shall have the same or higher pressure rating as the pipe when installed in accordance with the latest technical specifications. All fabricated fittings shall have the same or higher pressure rating as the adjoining pipe when installed in accordance with the manufacturer's recommendations.

The threaded stainless steel/HDPE transition pipe fittings for leachate transfer pipe shall be factory molded and constructed and shall have the same or higher pressure rating as the pipe. CONTRACTOR may reuse those existing fittings from the existing landfill gas wellheads pending approval from Engineer.

9-05.30(4) Pipe Connections

Joints and pipe connections shall be thermal butt-fusion. No mechanical couplings shall be used unless shown on the Plans or approved by the ENGINEER.

INFORMATIONAL COPY ONLY - NOT FOR BIDDING PURPOSES

Electrofusion couplings shall be used where shown on the Plans, in situations where welding machine access is difficult or impossible, or as determined by the ENGINEER.

Electrofusion couplings shall be a rigid straight coupler constructed from injection-molded polyethylene with embedded heating coils. Electrofusion couplings shall be manufactured in accordance with ASTM F 1055.

9-05.30(5) Flanges

Flanges shall consist of polyethylene flange adapter (ribbed-face) fused to each stubout of pipe, with a 304 stainless steel backup ring (Class 150# ANSI B 16.5) standard dimensions. Flanged connections shall have the same or greater pressure rating as the pipe. Bolts, nuts, and washers shall be 304 stainless steel and shall be assembled with anti-seize compound as recommended by the manufacturer. Blinds shall be 1-thick HDPE. All flanged connections shall be complete with a gasket.
Gaskets shall be flat ring, 1/8-inch Viton.

9-05.30(6) Valves

9-05.30(6)A Aboveground Valves

Butterfly Valve. Shall be manufactured with PVC wafer style bodies as manufactured by Asahi America Type 75 (no approved equal) with PVC/Polypropylene construction with a Viton liner, seat, and seals. Valves shall be provided with a worm gear operator, position indicator and handwheel for operation. Valves shall be rated for full vacuum service.

Shall be Asahi brand 6-inch butterfly valves and no approved equal.

Wellhead Valve and Assembly. The valves shall be 3-inch precision control valve for landfill gas service. The valves shall be come complete with plug valve design that allows for fine tuning even at low flows and handle flows up to 400 scfm at 40" water column. The valve stem and handle shall be constructed of stainless steel. Valve assembly shall be constructed of 304 stainless steel, PVC and viton materials. Valves shall be QED 3" precision fine tune control valve with Model No. CV3000 and no approved equal.

Flexible hose shall be 3-inch UV-resistant PVC with a rigid PVC helix in yellow color. Model No. 40949 with Banding clamps on each end, Model No. 40980. The hose and clamps shall be manufactured by QED and no approved equal.

HDPE Ball Valve – Leachate Transfer and Interim Stormwater Valves. The valves shall be 3-inch and 6-inch Poly-Water ball butt-fuse valve as manufactured by Plexco Bluestripe or approved equal. The valves shall be full bore with a 3-piece body, SDR 11 HDPE construction; polyethylene body, ball, seat retainer, and adaptor; and EDPM seat, and stem seal.

9-05.30(7) Pipe Supports

The pipe supports shall be constructed from 1-5/8-inch by 1-5/8-inch, 14-gauge steel channel. All fittings and components shall be the standard products of the channel manufacturer. Channel and all carbon steel fittings, caps, and components shall be galvanized per ASTM A153. Zinc electroplated bolting materials are acceptable. Channel support systems shall be Power-Strut, Unistrut, B-Line, or equal.

9-05.30(8) Pipe Guides and Anchors

Pipe guides shall be 1-inch-diameter galvanized carbon steel pipe and 3 feet long.

Pipe Anchor shall be a fabricated, hot-dipped galvanized carbon steel pipe clamp and welded pipe, as shown on the Plans. Bolts, nuts, and washers shall be hot-dipped galvanized.

INFORMATIONAL COPY ONLY - NOT FOR BIDDING PURPOSES

9-05.30(9) LFG Wellheads

Wellhead pipe, fittings, and flanges shall be SDR 11 HDPE and meet the requirements as described in this Section.

The monitoring port shall be Schedule 40 PVC, consisting of a 1-inch by ½" male threaded by threaded reducer bushing and ½" threaded plug.

Valves shall conform to Section 9-05.30(6)A-Wellhead Valve and Assembly.

9-05.31 FLARE FACILITY COMPONENTS AND MATERIALS (NEW SECTION)

9-05.31(1) Blowers and Components

Blowers. The blowers shall be a New York Blower System that shall be supplied by Baxter Air Engineering, 12625 NE Woodinville Drive, Woodinville, WA 98072, telephone: 425-486-6666. The blowers shall be Model No. 2106A10-Arrangement 1. No equal. The blower and motor shall be on a unitary base, with clockwise/bottom horizontal discharge, capable of performing as follows:

1. 685 SCFM at 35 inches water column total differential pressure, 3610 rpm, 5.6 bhp @ 1276 feet above sea level and 70°F.

The blower motor shall be 3-Phase, 60Hz, 460 VAC, suitable for installation in a Class 1, Division 1, Group D location. Motor shall be TEFC rated with an RPM as required by the blower supplier. The motor shall be 10 Hp, 1.15 power factor, and high efficiency. The blower shall have constant pitch v-belt drive.

The impellers shall be one piece cast aluminum alloy or heavy duty riveted aluminum construction with wheel type spark resistant construction.

The housing shall be tested, air-tight construction with cast iron with factory applied phenolic Heresite V504 coating applied on all airstream surfaces 1-2 mils dry film thick except the wheel.

The shaft seal shall be a double lip Viton Seal that is factory installed.

The blower shall be furnished with the following:

1. 4-inch flanged nominal diameter inlet, which conforms with ANSI 150# pipe flanges.
2. 6-inch flanged nominal diameter discharge, which conforms with ANSI 150# pipe flanges.
3. Rubber in shear vibration isolation rails.
4. Bearing and shaft guard with extended lube fittings.
5. Totally enclosed belt guard (safety yellow coating).
6. Green alkyd enamel coating on exterior surfaces.
7. Two spare set of belts shall be provided with each blower.

INFORMATIONAL COPY ONLY - NOT FOR BIDDING PURPOSES

Flexible Couplings. The Redflex Type J-1 flexible coupling shall be manufactured by the Red Valve Company. The 6-inch flanged, reinforced flexible couplings at the blowers shall be double arch, reinforced bellows with Viton interior coating, stainless steel flange backing rings, control rods, capable of compression and extension, and rated for 30 inches Hg vacuum and 140 psig standard pressure. The flexible couplings, as supplied by the blower supplier, shall be 10 inches in length and handle the maximum vacuum requirements of the blowers in this Section. The flanges shall meet ANSI Class 150 rating. The alignment rods are not required and shall not be installed.

Control panel. The control panel shall be a New York Blower System that shall be supplied by Baxter Air Engineering, 12625 NE Woodinville Drive, Woodinville, WA 98072, telephone: 425-486-6666. The control panel supplied with the blowers shall be designed to operate the blowers one at a time, only. The Elpac control panel shall include the following and shall be in accordance with Section 7-13 of these specifications:

1. Two (2) 10Hp motor starters -460v.
2. Panel disconnect switch.
3. Emergency stop button.
4. Two 20 amp 3-pole pad lockable motor breakers.
5. Two 15-amp single pole circuit breakers
6. Weather-proof 15-amp duplex receptacle
7. 15-wattt fluorescent fixture in panel with a door switch
8. Panel heater with thermostat
9. Hour meter for each blower – 2 total
10. Two (2) blower "Run" green lights.
11. Two (2) blower "Fail" red lights
12. One (1) rotating alarm beacon.
13. Alarm reset button for each blower – 2 total
14. Hand/Off/Auto switch
15. NEMA 4 enclosure with IEC style components
16. UL Label
17. Name plates: BL-1 and BL-2
18. Autocadd shop drawings

9-05.31(2) Flow Meter

The direct mass flow meter shall be a QED Environmental Systems ACCU-FLO Remote Flowmeter Model No. SRP-05-18-AC112-LFG-CBL100-LANDTEC/SVA05. The flow meter does not have a Class 1 Division 2 Group D rating. The display unit shall be mounted at the blower control panel area, as directed by the Engineer and Electrical Section 7-13 of these Specifications, separate from the insertion probe location, upstream of the flare, as shown on the Plans. The insertion probe and junction box shall be explosion proof for Class 1, Division 2, Group D.

The flow meter shall display landfill gas flow rate, total flow, temperature, graphical flow indicator, and calibration milliwatts is continuously displayed for ongoing diagnostics.

INFORMATIONAL COPY ONLY - NOT FOR BIDDING PURPOSES

The flow meter has a turndown of 100 to 1 and resolution as much as 1000 to 1. Low-end sensitivity so able to operate as low as 5 scfm. High contrast photo-emissive OLED display with screen saver feature.

The flow meter shall have a 4-20mA output of flow rate, pulsed outputs of totalized flow, and modbus compliant RS485 RTU comminications.

9-05.31(3) Electrical

Electrical shall conform to Section 7-13.

9-05.31(4) Valves

9-05.31(4)A Aboveground Valves

The butterfly valves (6-inch) shall be manufactured with PVC wafer style bodies as manufactured by Asahi American Type 57 with PVC/Polypropylene construction with a Viton liner, seat, and seals. Valves shall be provides with a worm gear operator option, position indicator, and handwheel for operation. Valves shall be rated for full vacuum service.

Bolts, nuts, and washers shall be 304 stainless steel and shall be assembled with anti-seize compound as recommended by the manufacturer. All flanged connections shall complete with a gasket.

Gaskets shall be flat ring, 1/8-inch thick Viton.

9-05.31(5) Flare Facility Pipe and Fittings

9-05.31(5)A HDPE Pipe and Fittings

HDPE Pipe and Fittings shall be in accordance with Section 9-05.30.

9-05.31(5)B PVC Pipe and Fittings

Pipe shall be new and free of visible cracks, holes, foreign inclusions, or other injurious defects. Pipe shall have been properly stored and show no visible sign of corrosion, ultraviolet degradation, chemical attack, or other deleterious condition. Pipe with nicks, scrapes, or gouges deeper than 5 percent of the nominal wall thickness or any other sign of any form of improper storage or handling shall be rejected.

PVC pipe shall be manufactured from Type 1 Grade 1 material Class 12454-B PVC conforming to the requirements of ASTM D 1784. PVC pipe shall be homogeneous throughout and uniform in color, density, and other physical properties. Pipe and fittings shall be solvent weld unless otherwise shown on the Plans, specified, or required to connect to equipment or components.

The PVC shall be the following shall be Schedule 80 and painted in accordance with these Specifications.

The manufacturer shall furnish appropriate certification, based on the manufacturer's routine quality control tests, that the pipe meets the requirements of the ASTM D 1785.

Fittings shall be rated and warranted to the full pressure of the pipe they are fabricated from. The manufacturer shall be able to demonstrate that the fittings have been randomly tested to exceed the following:

1. Short-term quick burst at 2.5 times the nominal operating pressure rating of the pipe material or greater, without damage.
2. Long-term 1,000 hour test at 2.0 times the normal operating pressure rating of the pipe material, or greater, without damage.

INFORMATIONAL COPY ONLY - NOT FOR BIDDING PURPOSES

Fittings 8 inches and smaller shall injection molded only and shall meet the requirements of ASTM D 2466. Fittings over 8 inches may be either injection molded or fabricated from PVC material. If fabricated, fabrication shall be by butt fusion or mitered and welded joints. Joints for fabricated fittings for 45° and 90° bends shall be butt fusion welded. All other bends may be thermoplastic welded with a minimum of three full weld passes. Welding rod shall be of the same material as the pipe. All fabricated fittings shall be reinforced with fiberglass, chemically bonded to the fittings, to achieve a shear strength of at least 1,000 psi. Test results shall be furnished upon request by the Engineer.

Flanges shall be ANSI Class 150 flat faced (face diameters and bolt pattern only for PVC flanges).

Gasket material for all PVC flanges, including PVC to HDPE flange connections, shall be 1/8-inch thick viton.

The manufacturer shall furnish appropriate certification, based on the manufacturer's routine quality control tests, that the pipe fittings meet the requirements of the ASTM D 2467.

Solvent cement and primer shall conform to ASTM D 2564.

9-05.31(6) Pipe Supports

Pipe supports shall conform to Section 9-05.30(7).

9-05.31(7) Anchor Bolts

Anchor bolts shall meet the requirements of Federal Specification FF-S-325, Group II, Type 3, Class 3. Use only materials compatible with embedded concrete environment.

Anchor bolts for the blower skids shall be expansion anchors or J-bolts sized to fit 0.88-inch diameter holes. Expansion anchors shall be Hilti HAS 5/8-inch-diameter, 61/4-inch-long sleeve anchors with hex head, p/n 000652297 or equal.

Anchor bolts for the pipe supports, type 1 and type 2, shall be expansion anchors sized to fit 9/16-inch diameter holes. Expansion anchors shall be Hilti HAS 3/8-inch-diameter, 6-inch-long sleeve anchors with hex head, p/n 000652172 or equal.

9-05.31(8) Paint System

9-05.31(8)A General

Prime, intermediate, and finish coat products used for this work shall be the products of one manufacturer. Tnemec products are specified as guide products due to the impracticality of including herein the extensive data available for each product specified. In order to be considered as equal, products must be of the same generic type, be capable of being applied in the same film thickness and number of coats, meet the solids by volume requirements, and have been tested and meet the same performance tests and standards as the specified guide products. The Contractor shall be solely responsible to demonstrate to the Engineer's satisfaction that proposed equal products meet or exceed the requirements specified herein and contained in the guide product (Tnemec) manufacturer data.

INFORMATIONAL COPY ONLY - NOT FOR BIDDING PURPOSES

9-05.31(8)B Prime Coat for PVC Pipe

Prime coat for PVC pipe shall be high build polyamide epoxy meeting the performance requirements of AWWA C 210, 54 to 58% volume solids (mixed), gray (Tnemec 33GR) in color, Tnemec Hi-Build Epoxoline Series 66 or equal.

9-05.31(8)C Finish Coat for PVC Pipe

Finish coat to be used for all field painting shall be a high-build semi-gloss aliphatic acrylic polyurethane, 56 to 60% volume solids (mixed), rated for continuous 250 degree F service, 275 degree F intermittent service, suitable for wet, exterior conditions, abrasion and chemical resistant, tested in accordance with and meeting or exceeding the test procedures and criteria listed in the following table, slate gray (Tnemec 31GR) in color, Tnemec Endura-Shield Series 73 or equal.

9-05.31(9) Landfill Gas Meters

9-05.31(9)A LFG Meter

The LFG Meter shall be a manufactured the Landtec GEM-5000 complete package, or approved equal. The meter shall be manufactured by QED Environmental. The meter shall be a portable analyzer instrument with the following features: measures CH4 (0-100%-by vol), CO2 (0-100% by-vol), O2 (0-25% by-vol) by volume, static and differential pressure, temperature probe, atmospheric pressure, has high accuracy and fast response time, is certified intrinsically safe for landfill use, and comes with 3-year warranty. The meter pump able to supply 80 cc/min at 80" w.c. The meter shall be ATEX, ISO, and CSA certified.

The meter shall come complete with instrument, hoses, heavy duty water trap filter, soft case, battery charger, optional temperature probe, electronic software, LSGAM software, USB download cable and hard case.

9-05.31(9)B Velocity Meter

The velocity meter shall be manufactured by TSI, or approved equal. The meter shall be the TSI 9535 VelociCalc Air Velocity meter. The meter shall come complete with straight telescoping probe, hard carrying case, batteries, USB cable and LogDat2 downloading software, operation and service manual, and calibration certificate. The meter shall measure 0 to 6,000 ft/min, and simultaneously measure temperature and velocity.

9-37 GEOSYNTHETICS (NEW SECTION)

The installer shall employ a third party laboratory approved by the Engineer for all testing of geosynthetics listed in this section. The location of testing and sampling shall be approved by the Engineer prior to the delivery of samples to the laboratory. All test results shall be given directly to the Engineer by the laboratory.

9-37.1 GEOSYNTHETIC TESTS

9-37.1(A) Hydraulic Conductivity Testing

Laboratory hydraulic conductivity testing shall be conducted on the GCL using ASTM D 5084. Samples from the GCL, which will be delivered to the site, shall be tested at a frequency of one hydraulic conductivity test for every 5,000 square yards, or a minimum of one per lot of material, whichever is greater. The triaxial permeameter shall have a maximum effective confining stress of 5 psi and a 2-psi

INFORMATIONAL COPY ONLY - NOT FOR BIDDING PURPOSES

head pressure. The sample shall be saturated with tap water. Samples shall be tested for the parameters listed below at the frequencies given:

Parameter	Frequency	Test Method
Hydraulic Conductivity	Every 5,000 sy	ASTM D 5084
Mass / Unit Area	Every 5,000 sy	ASTM D 5993
Grab Strength	Every 5,000 sy	ASTM D 4632
Peel Strength	Every 5,000 sy	ASTM D 4632

Any geomembrane sample, and the lot of material it represents, that fails the any testing shall be removed from the site and replaced with geomembrane material that meets specification.

Any GCL sample, and the lot of material it represents, that fails the hydraulic conductivity testing shall be removed from the site and replaced with GCL material that meets specification.

9-37.1(B) Interface Friction Angles

Laboratory interface friction tests shall be conducted on the GCL/HDPE interfaces using ASTM D 5321. Normal stresses of 1.2, 4.0, and 6.0 pounds per square inch (psi) along with a displacement rate of 0.04 inches per minute shall be used. Liner system soil components shall be compacted to the same moisture-density requirements specified for a full scale field placement and saturated 24 hours prior to shearing. Geosynthetics shall be oriented such that the shear force is parallel to the down slope orientation of these components in the field. The minimum seating time shall be 24 hours. The minimum friction angles required between all liner system components is a maximum of 27 degrees and a residual of 18 degrees. Results shall be submitted and approved prior to delivery of liner system geosynthetics.

The asperity height shall be reported in accordance with GM 12 and will be the minimum asperity height allowed on the project. The use of lesser asperity heights will require additional friction angle testing.

The Contractor shall select geosynthetic materials that are capable of meeting the minimum required friction angle. The Contractor shall test each layer interface individually. Material used for the testing shall be from the same lot of material delivered to the site.

9-37.1(C) Geomembrane Testing

Laboratory testing conducted on the geomembrane prior to shipment to the site. Samples from the same material, which will be delivered to the site, shall be tested at a frequency of one test for every 5,000 square yards. Samples shall be tested for the parameters listed below at the frequencies given:

Parameter	Frequency	Test Method
Thickness	Every 5,000 sy	ASTM D 5994
Asperity Height	Every 5,000 sy	GRI GM12
Carbon Black Dispersion	Every 5,000 sy	ASTM D 5596 Microtome
Stress Crack Resistance (Non textured Only)	1 per project	ASTM D 5397 Appendix, single point

Any geomembrane sample, and the lot of material it represents, that fails the any testing shall be removed from the site and replaced with geomembrane material that meets specification.

INFORMATIONAL COPY ONLY - NOT FOR BIDDING PURPOSES

9-37.1(D) Geomembrane Field Testing

Laboratory testing shall be conducted on completed field seams and the geomembrane material. Samples shall be sent by overnight mail to the installer's laboratory and tested for the parameters listed below at the frequencies given.

Parameter	Frequency	Test Method
Shear	Every destructive test	ASTM D 6392
Peel	Every destructive test	ASTM D 6392

9-37.2 GEOSYNTHETIC CLAY LINER

The materials supplied under these specifications shall be first-quality products designed and manufactured specifically for the purposes of this work, and have been satisfactorily demonstrated by prior use to be suitable and durable for such purposes. The materials shall be specifically compounded and mined of high-quality ingredients to produce a dimensionally stable, durable, and watertight liner.

The GCL shall consist of a layer of natural sodium bentonite clay encapsulated between two mechanically connected geotextiles and shall comply with all criteria in this specification. The minimum acceptable dimension of full-sized GCL panels shall be 200 feet in length and 13 feet in width. Short rolls (those less than full length) may be supplied at a rate no greater than 3 per 4,000 square yards.

The GCL shall have the following minimum values as determined by the test methods:

Property	Test Method	Value
Grab Strength (lbs.)	ASTM D 4632	150
Peel Strength (lbs.)	ASTM D 4632	15
Bentonite Mass/Unit Area (lb./ft.^{2})	ASTM D 5993	0.75
Flux (m^3/m^2)	ASTM D 5887	$1x10^{-8}$
Hydraulic Conductivity (cm/s)	ASTM D 5887	$5x10^{-9}$
Swell Index (ml/2g)	ASTM D 5890	24
Internal Shear Strength (reinforced) (psf)	ASTM D 5321	500
Fluid Loss (ml)	ASTM D 5891	18

9-37.3 GEOMEMBRANE: 60-MIL TEXTURED HDPE

The materials supplied under these specifications shall be new and first quality products designed and manufactured specifically for the purposes of this work, which have been satisfactorily demonstrated by prior use to be suitable and durable for such purposes. The geomembrane rolls shall be seamless, HDPE (Density 70.94 g/cm) containing no plasticizers fillers or extenders, and shall be free of holes, blisters or contaminants, and leak free verified by 100 percent in-line spark or equivalent testing. The geomembrane shall be supplied as a continuous sheet with no factory seams in rolls.

The resultant membranes shall be free from dirt, oil, foreign matter, scratches, cracks, creases, bubbles, pits, tears, holes, pinholes or other defects.

The HDPE lining material shall be manufactured into roll panels to conform to submitted and reviewed fabrication drawings. These drawings shall be submitted in accordance with Sections 1-05.3 and 1-06.1.

INFORMATIONAL COPY ONLY - NOT FOR BIDDING PURPOSES

The double-sided textured high density polyethylene (HDPE) geomembrane shall be uniformly textured on both sides. The geomembrane shall be manufactured in conformance with GRI GM 13. The HDPE geomembrane shall have the following physical properties as determined by test method:

Property	Test Method	Textured HDPE Value
Thickness (Mils min. avg.)	ASTM D 5199 for smooth and ASTM D 5994 for textured	60
• Lowest individual of 10 values		Nom. (-5%)
• Lowest individual for 8 of 10 values		-10%
• Lowest individual for 10 of 10 values		-15%
Asperity Height (min. avg.) (mil)	GM 12, ASTM D 7466	20[1]
Density (g/ml, min. avg.)	ASTM D 792, Method B	.940
Minimum Tensile Properties (each direction) (min. avg.)	ASTM D 6693	
1. Tensile Strength Yield (lb/in width)		132
2. Tensile Strength at Break (lb/in width)		132
3. Elongation at Yield (%)		13
4. Elongation at Break (%)		100
Puncture Resistance (min. avg.) (Lbs.)	ASTM D 4833	120
Tear Resistance (lbs, min.)	ASTM D 1004	45
Stress Crack Resistance [2][3] (minimum hours with no failure)	ASTM D 5397 (Attachment)	500
Oxidation Induction Time (OIT) Std. OIT, min	ASTM D 3895	140
Carbon Black Content (% Allowable Range)	ASTM D 4218	2-3
Carbon Black Dispersion	ASTM D 5596 (Attachment)	1 or 2

(1) Minimum average height. Actual height will be determined by interface friction testing for this project.

(2) The yield stress used to calculate the applied load for the SP-NCIL test should be the manufacture's mean value via MQC testing.

(3) Five replicate samples with 5 of 5 $\geq$ 200 hrs.

Rolls shall be labeled such that it is possible to relate each roll with manufacturing quality control documentation and raw material documentation.

9-37.4 GEOTEXTILE

The geotextile shall be nonwoven and consist of polymeric fibers or filaments composed of polypropylene or polyester. The fibers and filaments shall be oriented into a stable network whereby they retain their positions relative with each other. Geotextile shall be free of any chemical treatment or coating which reduces permeability, be inert to chemicals commonly found in soil, and shall be mildew resistant. The geotextiles shall be guaranteed needle free by the manufacturer. The geotextile cushion layer shall be a Type 2 geotextile. The geotextile shall conform to the following minimum average roll value for the physical properties (in each principal direction):

INFORMATIONAL COPY ONLY - NOT FOR BIDDING PURPOSES

Property	Test Method	Type 1 Value	Type 2 Value
Mass per Unit Area (oz/sy)	ASTM D 3776	12	16
Tensile Strength (lbs)	ASTM D 4632	300	380
Elongation (%)	ASTM D 4632	50	50
CBR Strength (lbs)	ASTM D 6241	535	1080
Trapezoidal Tear Strength (lbs)	ASTM D 4533	855	145
Flow Rate (gpm/sq. ft)	ASTM D 4491	90	50
Apparent Opening Size (AOS) (US Std Sieve)	ASTM D 4751	80	100

The geotextile shall be furnished in a protective wrapping to protect it from ultraviolet radiation and from damage due to shipping and handling.

9-38 SOILS (NEW SECTION)

9-38.1 EMBANKMENTS

Embankments shall consist of material from excavation areas or from stockpiles shown on the Plans. Embankment soil shall be well graded and have a rock size no larger than 6 inches.

9-38.2 LEACHATE COLLECTION LAYER

The leachate collection layer shall be screened from the on-site excavation area or from an offsite source. The on-site soil has a significant amount of larger stones and boulders and will require screening for use as the leachate collection layer.

The leachate collection layer shall be a uniformly-graded material and shall be a 1- to 1½-inch round gravel or approved equal.

The material shall contain no deleterious substances, debris, sharp objects, or other matter potentially damaging to the underlying composite liner system.

9-38.3 GCL BEDDING LAYER

The GCL bedding layer shall be screened from the on-site excavation area or from an offsite source. The on-site soil has a significant amount of larger stones and boulders, and will require screening for use. The maximum stone size shall be 0.5-inch. The material shall be well graded and classified as silty sand or clayey sand.

The GCL bedding layer shall be free of deleterious substances, debris, sharp objects, or other potentially damaging materials to the composite liner system.

9-38.4 ROCK ARMOR

The rock armor for the surface water ditches shall be the on-site, Owner supplied stockpile material and has the following gradation:

Sieve Size	Percent Passing
8" square	100
3" square	0 – 15
2" square	0-5
1" square	None.

INFORMATIONAL COPY ONLY - NOT FOR BIDDING PURPOSES

9-38.5 CRUSHED SURFACING

Crushed surfacing shall conform to WSDOT Standard Specifications Section 9-03.9(3) Top Course.

9-38.6 PIPE ZONE BEDDING

Pipe bedding shall conform to WSDOT Standard Specifications Section 9-03.12(3).

END OF DIVISION 9

INFORMATIONAL COPY ONLY - NOT FOR BIDDING PURPOSES

INFORMATIONAL COPY ONLY - NOT FOR BIDDING PURPOSES

APPENDIX A

Construction Quality Assurance Plan

INFORMATIONAL COPY ONLY - NOT FOR BIDDING PURPOSES

Construction Quality Assurance Plan

Ephrata Landfill
Phase 3 Development

Prepared for

Grant County
Public Works Department
124 Enterprise St. S.E.
Ephrata, Washington 98823

Prepared by

Parametrix
719 2nd Avenue, Suite 200
Seattle, WA 98104
(206) 394-3700
www.parametrix.com

INFORMATIONAL COPY ONLY - NOT FOR BIDDING PURPOSES

April 2020
Project No. 555-3746-001 (05.01)

INFORMATIONAL COPY ONLY - NOT FOR BIDDING PURPOSES

TABLE OF CONTENTS (Continued)

1. CONSTRUCTION QUALITY ASSURANCE CONCEPTS AND OVERVIEW 1-1

1.1 INTRODUCTION 1-1
1.1.1 Project Description 1-1
1.1.2 Scope 1-1
1.1.3 Definitions 1-2
1.2 RESPONSIBILITY AND AUTHORITY 1-2
1.3 PERSONNEL QUALIFICATIONS 1-5
1.4 WRITTEN CQA PLAN 1-5
1.5 DOCUMENTATION 1-6
1.5.1 Daily Inspection Reports 1-6
1.5.2 Inspection and Testing Reports 1-6
1.5.3 Problem Identification and Corrective Measures Reports 1-7
1.5.4 Record Drawings 1-7
1.5.5 Final Documentation and Certification 1-7
1.5.6 Document Control 1-8
1.5.7 Storage of Records 1-8
1.6 MEETINGS 1-8
1.6.1 Pre-Bid Meeting 1-8
1.6.2 Pre-Construction Meeting 1-9
1.6.3 Progress Meetings 1-10
1.7 WEATHER 1-10
1.8 WORK STOPPAGES 1-10

2. VACANT – COMPACTED SOIL LINER 2-1

3. GEOMEMBRANES 3-1

3.1 INTRODUCTION 3-1
3.2 MANUFACTURING 3-1
3.2.1 Submittal Review 3-1
3.2.2 Receiving Inspections 3-1
3.2.3 Acceptance and Conformance Testing 3-1
3.3 HANDLING 3-2
3.3.1 Handling and Site Storage 3-2
3.3.2 Deployment 3-2
3.3.3 Documentation 3-3
3.4 SEAMING 3-3
3.4.1 Weld Crew Qualifications 3-3
3.4.2 Trial Seams 3-4
3.4.3 Documentation 3-4
3.5 DESTRUCTIVE SEAM TESTING 3-4
3.5.1 Sampling Patterns 3-4
3.5.2 Shear and Peel Testing 3-4

INFORMATIONAL COPY ONLY - NOT FOR BIDDING PURPOSES.

TABLE OF CONTENTS (Continued)

3.5.3 Thickness Measurements 3-4
3.5.4 Carbon Black Dispersion....3-5
3.5.5 Environmental Stress Crack Resistance (Non-textured only)....3-5
3.5.6 Asperity Height 3-5
3.5.7 Documentation 3-5
3.6 NONDESTRUCTIVE SEAM TESTING 3-5
3.6.1 Coverage....3-6
3.6.2 Documentation 3-6
3.7 FINAL ACCEPTANCE 3-6
3.8 COVERING/BACKFILLING....3-6
3.8.1 Soil Backfilling....3-6
3.8.2 Covering with Geosynthetics 3-7

4. GEOSYNTHETIC CLAY LINERS 4-1
4.1 INTRODUCTION....4-1
4.2 MANUFACTURING....4-1
4.2.1 Submittal Review 4-1
4.2.2 Receiving Inspections....4-1
4.2.3 Acceptance and Conformance Testing....4-1
4.3 HANDLING....4-2
4.4 INSTALLATION....4-2
4.5 COVERING/BACKFILLING....4-3

5. SOIL DRAINAGE SYSTEMS 5-1
5.1 INTRODUCTION AND BACKGROUND....5-1
5.2 MATERIAL SELECTION....5-1
5.3 CONTROL OF MATERIALS 5-1
5.4 PLACEMENT 5-2
5.5 LEACHATE COLLECTION LAYER 5-2
5.6 DRAIN ROCK 5-2
5.7 PROTECTION 5-2

6. MISCELLANEOUS GEOSYNTHETICS 6-1
6.1 INTRODUCTION....6-1
6.2 GEOTEXTILES 6-1
6.2.1 Manufacturing 6-1
6.2.2 Handling 6-1
6.2.3 Installation 6-1
6.2.4 Backfilling or Covering....6-2

7. VACANT – FINAL COVER SOILS 7-1

INFORMATIONAL COPY ONLY - NOT FOR BIDDING PURPOSES

TABLE OF CONTENTS (Continued)

8. APPURTENANCES 8-1

8.1 INTRODUCTION 8-1

8.2 SYSTEMS PIPE AND FITTINGS 8-1

8.2.1 Submittal Review 8-1

8.2.2 Receiving Inspections 8-1

8.2.3 Handling 8-1

8.2.4 Installation 8-2

LIST OF TABLES

Table 1-1. Personnel Qualifications 1-5

Table 3-1. Tests for Geomembrane by Contractor's Independent Laboratory 3-5

Table 3-2. Tests for Geomembrane by Field Installer 3-5

Table 4-1. Tests for GCL by Independent Laboratory 4-3

Table 5-1. Recommended Tests and Testing Frequencies for Drainage Material 5-1

ATTACHMENTS

A CQA Forms

INFORMATIONAL COPY ONLY - NOT FOR BIDDING PURPOSES.

This Page Intentionally Left Blank

INFORMATIONAL COPY ONLY - NOT FOR BIDDING PURPOSES

1. CONSTRUCTION QUALITY ASSURANCE CONCEPTS AND OVERVIEW

1.1 INTRODUCTION

This Construction Quality Assurance (CQA) plan is for the Ephrata Landfill Phase 3 Development. It has been prepared by Parametrix, Inc. for the Grant County Public Works Department (Owner). This CQA plan describes the actions the Owner will undertake to assure and to document that the project is constructed in general accordance with the project plans and specifications.

1.1.1 Project Description

The proposed construction includes the construction of a bottom lining and leachate collection system for the Phase 3 Development landfill area (approximately 18 acres) and double bottom-lining for the leachate pond. The project includes installation of a geosynthetic clay liner (GCL), installation of a 60-mil HDPE geomembrane liner, placement of a geotextile cushion layer, placement of 18 inches of leachate collection layer, landfill gas system piping, and other incidental work for the landfill. For the landfill gas system, includes a buried, perimeter manifold that connects to the existing flare facility, aboveground lateral pipes, connection to the existing horizontal gas trenches and leachate cleanouts.

1.1.2 Scope

Construction quality assurance is widely recognized as a critically important factor in overall quality management for waste containment facilities. The best of designs and regulatory requirements will not necessarily translate to a waste containment facility that is protective of human health and the environment unless the facility is properly constructed.

This CQA plan provides guidance to the Owner:

- For specific inspections, observations, and tests;
- For documentation of the observed quality of materials and work; and
- Serves as a reference source for personnel performing and monitoring construction.

The inspections, observations, testing, and documentation will be performed by the Owner's CQA organization.

This CQA plan does not establish construction requirements. Construction requirements are established by the plans and specifications and are not restated here. The criteria for acceptance will be as defined in the plans and specifications.

This CQA plan does not establish procedures to control or guide the operations of the manufacturer of materials or the Contractor or relieve them of their contractual responsibility to set up the necessary procedures and controls within their organizations to produce the quality of work called for in the plans and specifications. This CQA plan is not intended to function as or replace the Contractor's quality control program.

INFORMATIONAL COPY ONLY - NOT FOR BIDDING PURPOSES

1.1.3 Definitions

It is critical to define and understand the differences between CQC and CQA and to counterpoint where the different activities contrast and/or complement one another. The following definitions are made.

- *Construction Quality Control (CQC):* A planned system of inspections that is used by the Contractor to directly monitor and control the quality of a construction project. CQC is normally performed by the geosynthetics installer for geosynthetic materials, or by the earthwork Contractor for natural soil materials, and is necessary to achieve quality in the constructed or installed system. CQC refers to measures taken by the installer or Contractor to determine compliance with the requirements for materials and workmanship as stated in the plans and specifications for the project.

- *Construction Quality Assurance (CQA):* A planned system of activities that provides the Owner and permitting agency assurance that the facility was constructed as specified in the design. CQA includes inspections, verifications, audits, and evaluations of materials and workmanship necessary to determine and document the quality of the constructed facility. CQA refers to measures taken by the CQA organization to assess if the installer or Contractor is in compliance with the plans and specifications for a project.

CQA is performed independently from CQC. Although CQA and CQC are separate activities, they have similar objectives, and in a smoothly running construction project, the processes will complement one another. Conversely, an effective CQA program can lead to identification of deficiencies in the CQC process, but a CQA program by itself (in complete absence of a CQC program) is unlikely to lead to acceptable quality management. Quality is best ensured with effective CQC and CQA programs.

1.2 RESPONSIBILITY AND AUTHORITY

Many individuals are involved directly or indirectly in CQC and CQA activities. The individuals, their affiliation, and their responsibilities and authority are discussed below.

The principal organizations and individuals involved in designing, permitting, constructing, and inspecting waste containment facilities are:

- *Permitting Agency:* The permitting agency for this project is the Grant County Health Department. It is the responsibility of the permitting agency to review the Owner's permit application, including the site-specific CQA plan, for compliance with the agency's regulations and to make a decision to issue or deny a permit based on this review. The permitting agency also has the responsibility to review CQA documentation during or after construction of a facility, possibly including visits to the construction site to observe the CQC and CQA practices, to confirm that the approved CQA plan was followed and that the facility was constructed as specified in the design.

- *Owner:* This is the organization that will own and operate the facility. The Owner is responsible for the design, construction, and operation of the facility. This responsibility includes complying with the requirements of the permitting agency, the submission of CQA documentation, and assuring the permitting agency that the facility was constructed as specified in the construction plans and specifications and as approved by the permitting agency. The Owner has the authority to select and dismiss organizations charged with design, construction, and CQA.

- *Owner's Representative:* The Owner's representative, or construction manager, is responsible to administer the construction program for the Owner. This responsibility includes communications

INFORMATIONAL COPY ONLY - NOT FOR BIDDING PURPOSES

to other members in the Owner's organization, permitting agency, general contractor, and CQA Engineer.

- *Design Engineer:* Parametrix, Inc. is the design engineer. The design engineer's primary responsibility is to design the facility so that it fulfills the operational requirements of the Owner, complies with accepted design practices for waste containment facilities, and meets or exceeds the minimum requirements of the permitting agency. The design engineer may be requested to change some aspects of the design if unexpected conditions are encountered during construction (e.g., a change in site conditions, unanticipated logistical problems during construction, or lack of availability of certain materials). Because design changes during construction are not uncommon, the design engineer is a major and essential part of the CQA process.

- *Manufacturer:* Many components, including geosynthetics, piping materials, and leachate pump, of a waste containment facility are manufactured materials. The manufacturer is responsible for the manufacture of its materials and for quality control during manufacture. The manufacturer is responsible for certifying that its materials conform to the plans and specifications. The quality control steps taken by a manufacturer are critical to the overall quality management in construction of waste containment facilities. Such activities often take the form of process quality control, computer-aided quality control, and the like. As requested, the manufacturer should provide information to the Owner, permitting agency, design engineer, fabricator, installer, or CQA Engineer that describes the quality control steps that are taken during the manufacturing of the product. In addition, the manufacturer should be willing to allow the Owner, permitting agency, design engineer, fabricator, installer, and CQA Engineer to observe the manufacturing process and quality control procedures if they so desire.

- *Fabricator:* Some materials are fabricated from manufactured components. For example, certain geomembranes are fabricated by seaming together smaller, manufactured geomembrane sheets at the fabricator's facility. The fabricator is responsible for certifying that its materials conform to the plans and specifications. The quality control steps taken by a fabricator are critical to the overall quality in construction of waste containment facilities. As requested, the fabricator should provide information to the Owner, permitting agency, design engineer, installer, or CQA Engineer that describes the quality control steps that are taken during the fabrication of the product. In addition, the fabricator should be willing to allow the Owner, permitting agency, design engineer, installer, or CQA Engineer to observe the fabrication process and quality control procedures if they so desire.

- *General Contractor:* The general contractor has overall responsibility for construction of the project and for CQC during construction. The general contractor arranges for the purchase of materials that meet specifications, enters into a contract with one or more fabricators (if fabricated materials are needed) to supply those materials, contracts with an installer (if separate from the general contractor's organization), and has overall control over the construction operations, including scheduling and CQC. The general contractor has the primary responsibility for ensuring that a facility is constructed in accordance with the plans and specifications that have been developed by the design engineer and approved by the permitting agency. The general contractor is also responsible for informing the Owner's representative of the scheduling and occurrence of all construction activities.

INFORMATIONAL COPY ONLY - NOT FOR BIDDING PURPOSES.

- *Installation Contractor (Installer):* Manufactured products (such as geosynthetics) are placed and installed in the field by an installation contractor who is the general contractor or a subcontractor to the general contractor. The installer's personnel may be employees of the manufacturer or fabricator, or they may work for an independent installation company hired by the general contractor. The installer is responsible for handling, storage, placement, and installation of manufactured and/or fabricated materials. The installer will have a CQC plan to detail the proper manner that materials are to be handled, stored, placed, and installed.

- *Earthwork Contractor:* The earthwork contractor is responsible for grading the site to the elevations and grades shown on the plans and for constructing earthen components of the project (e.g., granular drainage layers, and embankments) according to the specifications. The earthwork contractor may be hired by the general contractor. In some cases, the general contractor's personnel may serve as the earthwork contractor. The earthwork contractor is responsible not only for grading the site to proper elevations but also for obtaining suitable earthen materials, transport and storage of those materials, preprocessing of materials (if necessary), placement and compaction of materials, and protection of materials during and (in some cases) after placement. Earthwork functions must be carried out in accordance with the plans and specifications approved by the permitting agency. The earthwork contractor should have a CQC plan and is responsible for CQC operations aimed at controlling materials and placement of those materials to conform with project specifications.

- *CQC Personnel:* Construction quality control personnel (CQC) are individuals who work for the general contractor, installation contractor, or earthwork contractor and whose job is to ensure that construction is taking place in accordance with the plans and specifications.

- *CQA Engineer:* The CQA Engineer has overall responsibility for construction quality assurance (CQA). The CQA Engineer is usually an individual experienced in a variety of activities, although particular specialists in soil placement, polymeric materials, and geosynthetic placement will invariably be involved in a project. The CQA Engineer is responsible for reviewing the CQA plan as well as plans and specifications for the project so that the CQA plan can be implemented with no contradictions or unresolved discrepancies. Other responsibilities of the CQA Engineer include education of inspection personnel on CQA requirements and procedures, scheduling and coordinating of CQA inspection activities, ensuring that proper procedures are followed, ensuring that testing laboratories are conforming to CQA requirements and procedures, confirming that test data are accurately reported and that test data are maintained for later reporting, and preparation of periodic reports. The CQA Engineer will review all documentation on a regular basis.

The most important duty of the CQA Engineer is overall responsibility for confirming that the facility was constructed in general accordance with the plans and specifications approved by the permitting agency. In the event of nonconformance with the project plans, specifications, or CQA plan, the CQA Engineer should notify the Owner as to the details and, if appropriate, recommend work stoppage and possibly remedial actions. The CQA Engineer is an authorized representative of the Owner. The CQA Engineer will be on the construction site on a regular basis.

INFORMATIONAL COPY ONLY - NOT FOR BIDDING PURPOSES

The CQA Engineer is responsible for certifying to the Owner and permitting agency that, in his or her opinion, that the geosynthetics, leachate collection layer, and leachate pumping system have been constructed in general accordance with the plans, specifications, and CQA plan approved by the permitting agency. The certification statement is accompanied by a final CQA report that contains all the appropriate documentation, including daily observation reports, sampling locations, test results, drawings of record, and other relevant data.

- *CQA Personnel:* Construction quality assurance personnel are responsible for making observations and performing field tests to ensure that a facility is constructed in general accordance with the plans and specifications approved by the permitting agency. CQA personnel shall not revoke, alter, or relax the provisions of the plans and specifications. CQA personnel report to the CQA Engineer.
- *Testing Laboratory:* Many CQA tests are performed by commercial laboratories. The testing laboratory should have its own internal quality control plan to ensure that laboratory procedures conform to the appropriate American Society for Testing and Materials (ASTM) standards or other applicable testing standards. The testing laboratory is responsible for ensuring that tests are performed in accordance with applicable methods and standards, for following internal quality control procedures, and for reporting data. The testing laboratory must be willing to allow the Owner, permitting agency, design engineer, installer, or CQA Engineer to observe the sample preparation and testing procedures or record-keeping procedures, if they so desire.

1.3 PERSONNEL QUALIFICATIONS

The key individuals involved in CQA and their minimum qualifications are listed in Table 1-1.

Table 1-1. Personnel Qualifications

Individual	Minimum Qualifications
Design Engineer	Registered Professional Engineer.
Owner's Representative	The specific individual designated by the Owner with knowledge of the project, its plans, specifications, and CQA documents.
CQA Personnel	Employed by an organization that operates separately from the Contractor and the Owner, who has construction inspection experience.
CQA Engineer	Employed by an organization that operates separately from the Contractor and Owner, who is a registered Professional Engineer who has shown competency and experience in similar projects.

1.4 WRITTEN CQA PLAN

Quality assurance begins with a quality assurance plan. This CQA plan is the Owner's written plan for CQA activities. This CQA plan has been tailored to this specific project and coordinated with the project plans and specifications. It includes a detailed description of all CQA activities that will be used during construction to manage the installed quality of the facility.

A copy of the plans, specifications, CQA plan, and CQA documentation will be retained at the project site during the project. The plans, specifications, and CQA documents may be reviewed during a site inspection by the permitting agency and will be the chief means for the facility Owner to demonstrate to the permitting agency that CQA objectives for this project are being met.

INFORMATIONAL COPY ONLY - NOT FOR BIDDING PURPOSES.

1.5 DOCUMENTATION

A major purpose of the CQA process is to provide documentation for those individuals who were unable to observe the entire construction process (e.g., representatives of the permitting agency) so that those individuals can make informed judgments about the quality of construction for this project. CQA procedures and results must be thoroughly documented.

1.5.1 Daily Inspection Reports

Routine daily reporting and documentation procedures are required. Inspectors will prepare daily written inspection reports that will ultimately be included in the final CQA document. The daily reports will include information about work that was accomplished, tests and observations that were made, and descriptions of the adequacy of the work that was performed. As a minimum, the reports will contain the following:

- Date, project name, location, personnel involved in major activities, and other relevant identification information.
- Description of weather conditions, including temperature, cloud cover, and precipitation.
- Summaries of any meetings held and actions recommended or taken.
- Specific work units and locations of construction underway during that particular day.
- Equipment and personnel being utilized in each work task, including subcontractors.
- Identification of areas or units of work being inspected.
- Unique identifying sheet number of geomembranes for cross-referencing and document control.
- Description of off-site materials received, including any quality control data provided by the supplier.
- Calibrations or re-calibrations of test equipment, including actions taken as a result of re-calibration.
- Decisions made regarding approval of units of material or of work and/or corrective actions to be taken in instances of substandard or suspect quality.
- Unique identifying sheet numbers of inspection data sheets and/or problem reporting and corrective measures used to substantiate any CQA decisions described in the previous item.
- Signature of the CQA Engineer or designated representative.

See Appendix A for sample report forms.

1.5.2 Inspection and Testing Reports

All observations, results of field tests, and results of laboratory tests performed on site or off site will be recorded on a suitable data sheet. Recorded observations may take the form of notes, charts, sketches, photographs, or any combination of these. Where possible, a checklist may be useful to ensure that pertinent factors are not overlooked.

INFORMATIONAL COPY ONLY - NOT FOR BIDDING PURPOSES

As a minimum, the inspection data sheets will include the following information:

- Description or title of the inspection activity.
- Location of the inspection activity or location from which the sample was obtained.
- Type of inspection activity and procedure used.
- Unique identifying geomembrane sheet number for cross-referencing and document control.
- Recorded observation or test data.
- Results of the inspection activity, (e.g., pass/fail), comparison with specification requirements.
- Personnel involved in the inspection besides the individual preparing the data sheet.
- Signature of the CQA inspector and review signature by the CQA Engineer.

See Appendix A for sample report forms.

1.5.3 Problem Identification and Corrective Measures Reports

A problem is defined as material or workmanship that does not meet the requirements of the plans, specifications, or CQA plan for the project or any obvious defect in material or workmanship. Problem identification and corrective measures reports will contain the following information:

- Location of the problem.
- Description of the problem (in sufficient detail and with supporting sketches or photographic information where appropriate) to adequately describe the problem.
- When and by whom the problem was located (reference to inspection data sheet or daily summary report).
- Corrective measure(s).
- Who approved the corrective measure(s).
- Documentation of correction if corrective action was taken and completed prior to finalization of the problem and corrective measures report (reference to inspection data sheet, where applicable).
- Signature of the CQA inspector and review signature of the CQA Engineer.

See Appendix A for sample report forms.

1.5.4 Record Drawings

Record Drawings will be prepared to document the actual constructed lines, grades, and conditions of each component of the project according to the as-built drawings submitted by the Contractor.

For geosynthetic components, the drawings of record will be provided by the geomembrane installer and will show the dimensions and location of each panel and geomembrane penetration. Each panel and seam will be identified with its appropriate alpha-numeric identification. The location of patches, repairs, and destructive test samples will be shown on individual panel inspection sheets.

1.5.5 Final Documentation and Certification

At the completion of a project, the Owner will submit a final report to the permitting agency. This report will include all of the Contractor's submittals, daily inspection reports, inspection data sheets, problem

INFORMATIONAL COPY ONLY - NOT FOR BIDDING PURPOSES

identification and corrective measures reports, and other documentation such as quality control data provided by manufacturers or fabricators, laboratory test results, photographs, drawings of record, internal CQA memoranda or reports with data interpretation or analyses, and design changes made by the design engineer during construction. The document will be certified by the CQA Engineer as follows:

In accordance with project CQA Plan, the undersigned professional engineer states that:

> *A designated representative under the supervision of a licensed professional engineer was present during construction to observe construction activities, and that person has reviewed the results of the field testing of materials, and to the best of the person knowledge, and belief, the following project, Ephrata Landfill Phase 3 Development was constructed in accordance with the approved construction documents and the materials used in construction were in general conformance with the specifications. Based on the forgoing, the project can be put into service.*

1.5.6 Document Control

A control scheme will be implemented to organize and index all CQA and CQC documents. This scheme will be designed to allow easy access to all documents and will enable a reviewer to identify and retrieve submittals, inspection reports, or data sheets for any completed work element.

1.5.7 Storage of Records

During construction, the CQA Engineer will be responsible for all CQA documents. This includes a copy of the design criteria, plans, specifications, CQA plan, and originals of all data sheets and reports. Duplicate records will be kept at another location to avoid loss of this valuable information if the originals are destroyed.

Once construction is complete, the document originals will be stored by the Owner in a manner that will allow for easy access while still protecting them from damage. An additional copy should be kept at the facility if this is in a different location from the Owner's main files. A final copy should be kept by the permitting agency. All documentation should be maintained through the operating and post-closure monitoring periods of the facility by the Owner and the permitting agency in an agreed-upon format (hard copy, microfiche, electronic medium, etc.).

1.6 MEETINGS

Communication is extremely important to quality management. Quality construction is easiest to achieve when all parties involved understand clearly their responsibility and authority. Meetings can be very helpful to make sure that responsibility and authority of each organization is clearly understood. During construction, meetings can help to resolve problems or misunderstandings and to find solutions to unanticipated problems that have developed.

1.6.1 Pre-Bid Meeting

Discussion of the CQA plan will be included in the pre-bid meeting so that the companies bidding on the construction will understand the level of CQA to be employed on the project.

1.6.2 Pre-Construction Meeting

The pre-construction meeting is held after a general construction contract has been awarded and the major subcontractors and material suppliers are established. It is usually held concurrent with the initiation of construction. The purpose of this meeting is to:

INFORMATIONAL COPY ONLY - NOT FOR BIDDING PURPOSES

- Review construction plans and specifications, emphasize the critical aspects of a project necessary to ensure proper quality, begin planning and coordination of tasks, and anticipate any problems that might cause difficulties or delays in construction.
- Review the details of the CQA plan to make sure that the responsibility and authority of each individual is clearly understood, to agree on procedures to resolve construction problems, and to establish a foundation of cooperation in quality management.

The pre-construction meeting should be attended by the Owner's representative, design engineer, representatives of the general contractor and major subcontractors, the CQA Engineer, and a representative from the permitting agency, if that agency expects to visit the site during construction or independently observe CQA procedures.

The pre-construction meeting will include the following activities:

- Assign an individual to take minutes.
- Introduce parties and identify their responsibility and authority.
- Describe the plans and specifications and discuss any unique design features (so the Contractor will understand the rationale behind the general design), identify and discuss any potential construction problems, and discuss questions from any of the parties concerning the construction.
- Review and discuss the CQA plan, identifying expectations, and the most critical components of the project.
- Discuss CQC procedures that the installer and Contractor will employ.
- Discuss any special permit restrictions.
- Discuss responsibilities and lines of communication.
- Discuss reporting procedures, distribution of documents, schedule for any regular meetings, and resolution of construction problems.
- Review site requirements and logistics, including safety procedures.
- Discuss construction variables (e.g., precipitation, wind, and temperature), which may affect the work and schedule.

It is very important that the procedures for inspection and testing be known to all, that the criteria for pass/fail decisions be clearly defined (including the resolution of test data outliers), that all parties understand the key problems that the CQA personnel will be particularly careful to identify, that each individual's responsibilities and authority be understood, and that procedures regarding resolution of problems be understood.

1.6.3 Progress Meetings

Weekly progress meetings will be held. Weekly meetings can be helpful in maintaining lines of communication, resolving problems, identifying action items, and improving overall quality management. When numerous critical work elements are being performed, the frequency of these meetings can be increased to biweekly, or even daily. Persons who should attend this meeting are those involved in the specific issues being discussed. At all times the CQA Engineer, or designated representative, should be present.

INFORMATIONAL COPY ONLY - NOT FOR BIDDING PURPOSES

1.7 WEATHER

Weather can play a critical role in the construction of waste containment facilities. Installation of some geosynthetic materials (including geomembrane and geosynthetic clay liners) and compacted soil liners are particularly sensitive to weather conditions, including temperature, wind, humidity, and precipitation. The Contractor or installer is responsible for complying with the contract plans and specifications. It is the responsibility of the CQA personnel to make sure that these weather restrictions are observed during construction.

1.8 WORK STOPPAGES

Unexpected work stoppages can occur due to a variety of causes, including labor strikes, contractual disputes, weather, CQA problems, etc. The CQA Engineer should be particularly careful during such stoppages to determine (1) whether in-place materials are covered and protected from damage (e.g., lifting of a geomembrane by wind; (2) whether partially covered materials are protected from damage (e.g., desiccation of a compacted soil liners); and (3) whether manufactured materials are properly stored and properly stored and properly or adequately protected (e.g., whether geotextiles are protected from ultraviolet exposure). The cessation of construction should not mean the cessation of CQA observation and documentation.

END OF SECTION

INFORMATIONAL COPY ONLY - NOT FOR BIDDING PURPOSES

2. VACANT – COMPACTED SOIL LINER

INFORMATIONAL COPY ONLY - NOT FOR BIDDING PURPOSES.

3. GEOMEMBRANES

3.1 INTRODUCTION

This chapter focuses upon the manufacturing quality assurance of the geomembrane delivered to the site and the construction quality assurance of the complete installation of the geomembrane in the field.

3.2 MANUFACTURING

3.2.1 Submittal Review

All qualification statements, samples, produce descriptions, and quality control documentation and certification submitted by the manufacturer will be reviewed and initialed by CQA personnel for conformance with the specifications. The manufacturer's documentation will also be checked to verify that the testing frequency and the test parameters required by the specifications are implemented and followed.

All deviations from specified ranges (outliers) will be reported to the CQA Engineer and documented on Problem Identification and Corrective Measures Reports. The CQA Engineer will review all outliers and determine the necessary corrective action. The CQA Engineer's determination will be based on all available data, guidance from ASTM D 4759 Standard Practice for Determining the Specification Conformance of Geosynthetics, and best engineering judgment.

All manufacturer's quality control submittals and delivered geomembrane panels/rolls will be tracked on a ledger to ensure that all required quality control submittals are received. See Appendix A, Form R-3, for a sample ledger.

3.2.2 Receiving Inspections

Visual observation of each shipment of geomembrane will be performed when the material is received on the site to ensure that the correct material is received, that it is in accordance with reviewed submittals, and is not damaged. A checklist will be used to document observations. See Appendix A, Form R-1, for sample receiving checklists.

3.2.3 Acceptance and Conformance Testing

Conformance testing will be performed on all geomembrane delivered to the project site. Sampling will be performed in accordance with ASTM D 4354 Standard Practice for Sampling of Geosynthetics for Testing, Procedure B - Sampling for Quality Assurance Testing. The samples will be tested for thickness, carbon black dispersion, and stress crack resistance by an independent accredited laboratory. Test methods will be as stipulated in the specifications.

All deviations from specified ranges (outliers) will be reported to the CQA Engineer and documented on Problem Identification and Corrective Measures Reports. The CQA Engineer will review all outliers and determine what rejection or corrective action is required. The CQA Engineer's determination will be based on all available data, guidance from ASTM D 4759 Standard Practice for Determining the Specification Conformance of Geosynthetics, and best engineering judgment.

3.3 HANDLING

It is important that the geomembrane is handled, stored, transported, re-stored, re-handled, and deployed in a manner so as not to cause any damage.

INFORMATIONAL COPY ONLY - NOT FOR BIDDING PURPOSES

3.3.1 Handling and Site Storage

Visual observations of the geomembrane prior to deployment will be performed to ensure that:

- Unloading of rolls or pallets does not damage the geomembrane.
- Pushing, sliding, or dragging of the rolls or pallets does not occur.
- Storage areas are and will continue to be free of standing water.
- The ground surface of the storage area is free of stones or other rough objects that could damage the geomembrane.
- Geomembrane rolls are not stacked so high that crushing of the core or flattening of the rolls occurs. This limit is typically 2 to 5 rolls high.
- Pallets of geomembrane are not stacked at all.

The visual observations will be documented on the daily reports when applicable.

3.3.2 Deployment

Visual observations and verification will be performed during deployment to ensure that:

- The subgrade soil or GCL has been approved for placement of the overlying geomembrane (Form I-7, Appendix A).
- The weather conditions (i.e., fog, rain, temperature, and wind) are within acceptable ranges.
- Rocks or other deleterious material that may cause damage are not trapped beneath the geomembrane.
- The construction equipment deploying the rolls or pallets does not deform or rut the soil subgrade excessively. Generally, tire or track deformations beneath the geomembrane should not be greater than 1-inch.
- The geomembrane is not deployed on frozen ground.
- Underlying geosynthetic materials do not have unacceptable folds, wrinkles, or other undulations that will be trapped under the geomembrane.
- Construction equipment is not running on underlying geosynthetics.
- Care is being taken to unroll or unfold the geomembrane close to its intended and final position to minimize dragging material into position.
- Sufficient slack is placed in the geomembrane to compensate for the coldest temperatures envisioned so that no tensile stresses are generated in the geomembrane or in its seams during installation.
- Sufficient slack is placed in the geomembrane so that it does not lift up off of the subgrade at any location (i.e., no trampolining over ditches or sumps).
- The geomembrane does not have excessive slack to the point where creases fold over upon themselves during backfilling of overlying materials.

Visual observation of the geomembrane sheet will be made to identify pinholes, surface blemishes, scratches, cuts, or other manufacturing defects or installation damage. Any imperfections will be marked for repair.

INFORMATIONAL COPY ONLY - NOT FOR BIDDING PURPOSES

3.3.3 Documentation

Work on each individual geomembrane panel will be documented on its own individual Geomembrane Panel form. See Appendix A, Form I-1, for a sample form.

The Geomembrane Panel form will be used to document the following work:

- Pertinent visual observations made during deployment.
- Seaming crew identification, seaming time, and direction.
- Location and results of nondestructive and destructive testing.
- Location and results of inspection of sumps, manholes, risers, and penetrations.
- Location of patches and repairs.
- Location of extrusion, chemical, and fusion welds.
- Geomembrane roll and/or panel identification number.
- Final panel inspection and approval for covering.

3.4 SEAMING

The field seaming of the deployed geomembrane rolls or panels is perhaps the most critical aspect of their successful functioning as a barrier to liquid flow.

3.4.1 Weld Crew Qualifications

Only welders who are qualified in accordance with the specifications and who are identified as qualified welders by the installer will be allowed to weld geomembrane on the project.

3.4.2 Trial Seams

Trial seams, also called qualifying seams, are meant to serve as a pre-qualifying test for personnel, equipment, and procedures for thermal seaming processes (extrusion and fusion seaming). The seam is made on the identical geomembrane material under the same climatic and subgrade conditions as the actual field production seams will be made. Only weld crews that pass the test as stipulated in the specifications will be allowed to weld actual extrusion and fusion production seams.

Trial seams for thermal seaming processes will be required at the frequency dictated in the specifications. This is generally at the beginning of the work shift, after lunch breaks, whenever personnel or equipment are changed, and when climatic conditions change greatly.

3.4.3 Documentation

Weld crews and their trial seam test results will be recorded on a trial seam ledger each time they qualify. Generally, each crew will qualify twice per shift. See Appendix A, Form I-8, for a sample ledger.

3.5 DESTRUCTIVE SEAM TESTING

Destructive testing is performed by actually cutting out and removing a portion of the completed production seam and testing the tensile properties of the seam sample in shear and peel modes. The purpose of this testing is to determine the strength of the seam.

INFORMATIONAL COPY ONLY - NOT FOR BIDDING PURPOSES

3.5.1 Sampling Patterns

Destructive seam samples will be taken at fixed increments as stipulated in the specifications and at locations identified by the CQA personnel. CQA personnel will observe all seam sample cutting and ensure that proper identification is placed on each portion of the sample. The installer will not be informed as to the sampling locations prior to sampling.

Samples will be taken at fixed increments. A sample will be taken from each seam in the fixed increment. If CQA personnel suspect inadequate seaming in particular areas, additional destructive samples will be taken in those suspect areas.

Generally, destructive samples will not be taken from sump areas, near penetrations, or in other areas where patching would be difficult.

3.5.2 Shear and Peel Testing

Each destructive seam sample will be tested by the installer on site for shear and peel strength in accordance with the specifications. All destructive seam samples will be tested in an independent laboratory to verify the installer's testing apparatus and results.

All seams that do not pass the destructive test will be repaired and retested in accordance with the specifications.

3.5.3 Thickness Measurements

Prior to shipment of the material, an independent lab will measure the thickness of the geomembrane at a frequency listed in the specifications. The test method will be as stipulated in the specifications.

3.5.4 Carbon Black Dispersion

Prior to shipment of the material, an independent lab will measure the thickness of the geomembrane at a frequency listed in the specifications. The test method will be the microtome test as given in ASTM D 5596.

3.5.5 Environmental Stress Crack Resistance (Non-textured only)

One sample of the smooth HDPE geomembrane material will be tested by an independent laboratory for Environmental Stress Crack Resistance. The test will be the single point test as given in ASTM D 5397, Appendix.

3.5.6 Asperity Height

Prior to shipment of the material, an independent lab will measure the thickness of the geomembrane at a frequency listed in the specifications. The test method will be as given in GM 12.

3.5.7 Documentation

Results of the installer's testing and the independent seam testing will be documented on a Destructive Seam Test ledger. The independent laboratory results are to be sent directly from the laboratory to the CQA Engineer. Retests associated with failed tests will also be tracked on this ledger. See Appendix A, Form I-2, for a sample ledger and Tables 3-1 and 3-2 for the tests and test frequency.

INFORMATIONAL COPY ONLY - NOT FOR BIDDING PURPOSES.

Table 3-1. Tests for Geomembrane by Contractor's Independent Laboratory

Parameter	Frequency	Test Method	Specification Section
Shear	Every destructive test by installer	ASTM D 6392	9-37.1(D)
Peel	Every destructive test by installer	ASTM D 6392	9-37.1(D)
Thickness	Every 5,000 sy of material	ASTM D 5994	9-37.1(C)
Asperity Height	Every 5,000 sy of material	GRI GM 12	9-37.1(C)
Carbon Black Dispersion	Every 5,000 sy of material	ASTM D 5596 Microtome	9-37.1(C)
Stress Crack Resistance (Non-textured only)	1 for project	ASTM D 5397 Appendix Single Point	9-37.1(C)
Friction Angle	1 for GCL to geomembrane	ASTM D 5321	9-37.1(B)

Table 3-2. Tests for Geomembrane by Field Installer

Parameter	Frequency	Test Method	Specification Section
Shear	1 per 500 lineal feet seam	ASTM D 6392	9-37.1(D)
Peel	1 per 500 lineal feet seam	ASTM D 6392	9-37.1(D)

3.6 NONDESTRUCTIVE SEAM TESTING

Although it is important to conduct destructive tests on the fabricated seams, such tests do not give adequate information on the continuity and completeness of the entire seam between sampling locations. The goal of nondestructive seam testing is to verify the continuity of the seams over 100 percent of their length, or as much as is practical. This type of testing is not meant to quantify seam strength.

3.6.1 Coverage

General observation of nondestructive testing methods used by CQC personnel will be performed to ensure that proper testing procedures are being followed.

Visual observation of all seams will be performed to ensure that nondestructive testing has been performed and documented in accordance with the specifications. All failing seams will be marked for repair.

3.6.2 Documentation

Nondestructive test results will be documented on the Geomembrane Panel forms (Appendix A, Form I-1) discussed previously.

3.7 FINAL ACCEPTANCE

Prior to covering the geomembrane with another geosynthetic or a soil layer, each panel will receive a final inspection to ensure that all seams have been tested, all damage has been repaired, and that the proper documentation has been recorded on the Geomembrane Panel form (Appendix A, Form I-1). The CQA personnel performing the final inspection will sign and date the Geomembrane Panel form when the panel is approved for covering.

INFORMATIONAL COPY ONLY - NOT FOR BIDDING PURPOSES

3.8 COVERING/BACKFILLING

After geomembrane installation is completed, it must be backfilled with soil or covered with a geosynthetic in a timely manner after its acceptance by the CQA personnel. This is a critical step since geomembranes are relatively thin materials with puncture and tear strengths of finite proportions.

3.8.1 Soil Backfilling

Visual observation of soil backfilling will be performed by CQA personnel. At least one CQA observer will be in each area where and when this work is being performed.

Visual observations will be performed to ensure that:

- Oversized or other deleterious materials that may damage the geomembrane are identified and removed from the soil backfill.
- The initial lift thickness is greater than or equal to the specified thickness.
- The type of equipment and soil placement methods are in accordance with the specifications.
- Construction equipment does not operate directly on the geomembrane.
- Folds of geomembrane are not trapped under the soil.
- The direction of soil placement, on slopes, is in accordance with the specifications.

This visual observation will be documented on daily checklists for each area being backfilled. See Appendix A, Form I-6, for a sample checklist.

3.8.2 Covering with Geosynthetics

General visual observation of geosynthetic placement over geomembranes will be performed by CQA personnel to ensure that:

- Rocks or other deleterious materials that may damage the geomembrane are not trapped between the materials.
- The type of equipment and geosynthetic placement methods are in accordance with the specifications.
- The geomembrane is not damaged by dragging rolls or sheets of geosynthetics over it.
- Construction equipment does not operate directly on the geomembrane.
- Folds of geomembrane are not trapped between the materials.

This visual observation will be documented on daily checklists for each area being backfilled. See Appendix A for a sample checklist.

END OF SECTION

INFORMATIONAL COPY ONLY - NOT FOR BIDDING PURPOSES.

4. GEOSYNTHETIC CLAY LINERS

4.1 INTRODUCTION

Geosynthetic clay liners (GCLs) are factory-manufactured hydraulic barriers consisting of bentonite clay or other very low permeability clay materials, supported by geotextiles and/or geomembranes that are held together by needling, stitching, and/or chemical adhesives. GCLs are hydraulic barriers to water, leachate, or other liquids. As such, they are used to replace compacted soil liners or geomembranes, or they are used in a composite manner to augment compacted soil liners or geomembrane materials.

Generally, the material quality of GCLs is less variable than for compacted soil liners. The installation of GCLs is quicker, simpler, and less weather-dependent than for compacted soil liners. Therefore, CQA for GCLs is less intense than for compacted soil liners.

4.2 MANUFACTURING

4.2.1 Submittal Review

All qualification statements, samples, product descriptions, and quality control documentation and certifications submitted by the manufacturer will be reviewed and initialed by the CQA personnel for conformance with the specifications. The manufacturer's documentation will also be checked to verify that the testing frequency and the test parameters required by the specifications are implemented and followed for the clay material, the associated geosynthetic, and the finished GCL.

All deviations from specified ranges (outliers) will be reported to the CQA Engineer and documented on Problem Identification and Corrective Measures Reports. The CQA Engineer will review all outliers and determine the necessary corrective action. The CQA Engineer's determination will be based on all available data, guidance from ASTM D 4759 Standard Practice for Determining the Specification Conformance of Geosynthetics, and best engineering judgment.

All manufacturer's quality control submittals and delivered GCL rolls will be tracked on a ledger to ensure that all required quality control submittals are received. See Appendix A for a sample ledger.

4.2.2 Receiving Inspections

Visual observation of each shipment of GCL will be performed when the material is received on the site to ensure that the correct material is received, that it is in accordance with reviewed submittals, is properly covered, and is not damaged. A checklist will be used to document observations. See Appendix A for sample receiving checklists.

4.2.3 Acceptance and Conformance Testing

Conformance testing will be performed on all GCLs delivered to the project site. Sampling will be performed in accordance with ASTM D 4354 Standard Practice for Sampling of Geosynthetics for Testing, Procedure B - Sampling for Quality Assurance Testing. The samples will be tested for mass per unit area and free swell of the clay component by an approved laboratory. The GCL delivered to the site will be tested for hydraulic conductivity by an approved laboratory. Test methods will be as stipulated in the specifications.

All deviations from specified ranges (outliers) will be reported to the CQA Engineer and documented on Problem Identification and Corrective Measures Reports. The CQA Engineer will review all outliers and determine what rejection or corrective action is required. The CQA Engineer's determination will be based on all available data, guidance from ASTM D 4759 Standard Practice for Determining the Specification Conformance of Geosynthetics, and best engineering judgment.

INFORMATIONAL COPY ONLY - NOT FOR BIDDING PURPOSES

4.3 HANDLING

GCLs are sensitive to moisture and must be protected from premature hydration. General observation will be performed during delivery, storage, and deployment to ensure that:

- The GCL, its core, and protective wrapping are not damaged.
- The rolls are stored in a manner/location that will protect them from the weather or other water damage.
- The rolls are not stacked in a manner that will cause thinning at the points of contact with supports or other rolls.

The visual observations will be documented on the daily reports when applicable.

4.4 INSTALLATION

Visual observation will be performed during installation to ensure that:

- The underlying soil or geosynthetic has been approved for covering.
- The construction equipment deploying the rolls does not damage the underlying soil or geosynthetic.
- Care is being taken to unroll the GCL close to its intended and final position to minimize dragging material into place.
- Wrinkles and folds are minimized.
- Rocks and other deleterious material that may cause damage are not trapped beneath the GCL.
- Trimming of the GCL is performed properly so that clay particles are not lost from the GCL and fugitive clay does not contaminate adjacent drainage materials such as drain rock, geonets, or geotextiles.
- Seams are shingled correctly, and overlap distances are equal to or greater than the specified requirements.
- Additional bentonite clay is properly placed in seam overlap regions, if required (this is a product-specific requirement).
- All damage is identified and repaired in accordance with the specifications.

This visual observation will be documented on daily checklists for each area being installed. See Appendix A for a sample checklist.

4.5 COVERING/BACKFILLING

GCLs must be covered before a rainfall or snow event occurs. GCLs require covering on the same day they are deployed. The reason for covering an adhesive-bonded GCL is that hydration before covering can cause changes in thickness as a result of uneven swelling or when compressive or shear loads are encountered. Hydration before covering may be less of a concern for the needled and stitch-bonded types of GCLs, but migration of the fully hydrated clay in these products might also be possible under sustained compressive or shear loading.

GCLs should not be deployed in the rain or when there is a significant likelihood that it will rain prior to covering the GCL. Generally, GCLs can be deployed shortly after a rainfall or threat of a rainfall is over, once standing water has drained away.

INFORMATIONAL COPY ONLY NOT FOR BIDDING PURPOSES.

Visual observation of covering with geosynthetics or soil backfilling will be performed by CQA personnel. At least one CQA observer will be in each area where and when this work is being performed.

Visual observations will be performed to ensure that:

- The GCL is approved for covering by CQA personnel.
- The GCL is covered by the next overlying layer of geomembrane prior to rainfall or snow and within the time period stipulated in the specifications.
- The type of equipment and soil placement methods are in accordance with the specifications.
- Construction equipment does not operate directly on the GCL.
- This visual observation will be documented on daily checklists for each area being covered or backfilled. See Appendix A for a sample checklist and Table 4-1 for the tests and test frequency.

Table 4-1. Tests for GCL by Independent Laboratory

Parameter	Frequency	Test Method	Specification Section
Hydraulic Conductivity	1 per 5,000 square yards	ASTM D 5084	8-05.5
Mass / Unit Area	1 per 5,000 square yards	ASTM D 5993	8-05.5
Grab Strength	1 per 5,000 square yards	ASTM D 4632	8-05.5
Peel Strength	1 per 5,000 square yards	ASTM D 4632	8-05.5

END OF SECTION

INFORMATIONAL COPY ONLY - NOT FOR BIDDING PURPOSES

INFORMATIONAL COPY ONLY - NOT FOR BIDDING PURPOSES.

5. SOIL DRAINAGE SYSTEMS

5.1 INTRODUCTION AND BACKGROUND

Natural soil drainage materials are used in this containment project as:

- Leachate Collection soil layer above the liner system to protect the underlying liner system and to remove leachate for treatment, and around perforated collection pipes.

The primary function of the leachate collection layer on this project is to drain and remove leachate for treatment, and secondary function is to protect the underlying liner system.

5.2 MATERIAL SELECTION

Materials for leachate collection layer have be obtained directly from excavations, but the layer was processed in order to meet the material specifications. Therefore, for this project, the leachate collection layer will be obtained directly from on-site stockpile sources. The leachate collection layer materials must not damage any underlying geosynthetics. Therefore, the maximum soil particle size is typically specified, and angular or crushed rock are only allowed in designed applications. To ensure the suitability of the soil drainage layer materials, potential borrow sources will be inspected to:

- Obtain and test representative samples of the proposed materials for the parameters listed in Table 5-1.

Table 5-1. Recommended Tests and Testing Frequencies for Drainage Material

Type of Drainage Material	Type of Test	Minimum Frequency
Leachate Collection Layer	Grain Size (ASTM D 422)	1 per 10,000 CY

Periodic observation from the stockpile and at placement will be performed to ensure that:

- Deleterious materials (such as large stones, crushed or angular stones above specification limits, large pieces of organic or other detrimental matter) are not present in the material.
- The material remains consistent, such as color, texture, gradation, and other visually observable characteristics.

5.3 CONTROL OF MATERIALS

Representative samples of the leachate collection layer materials should be tested for grain size prior to installation. Because it is extremely difficult to remove and replace a soil material without damaging an underlying geosynthetic component, testing of soil materials must occur prior to placement of the material.

To ensure the suitability of the leachate collection layer materials, the tests and frequency of testing shown in Table 5-1 will be performed. No more than 5 percent of the CQA tests will be allowed to deviate from the specifications.

5.4 PLACEMENT

Soil materials are placed in layers (e.g., as leachate collection layer) or in drainage trenches (e.g., to provide drainage around collection pipes). Placement considerations differ depending on the application and shall be placed in accordance with the specifications, plans, and this CQA plan.

INFORMATIONAL COPY ONLY - NOT FOR BIDDING PURPOSES

5.5 LEACHATE COLLECTION Layer

Granular soil drainage materials are usually hauled to the placement area in dump trucks, front-end loaders, or scrapers and are typically loosely dumped and spread with bulldozers. Low ground pressure dozers can be used to spread the cover soil material and minimize the stress on the granular material and underlying geotextile layers. Granular materials placed on top of geosynthetic components on side slopes should be placed from the bottom of the slope up. The dozer should not be allowed to make sharp turns while over the liner.

When granular drainage material is placed on a previously installed geosynthetic material and spread with a dozer, the sand or gravel should be lifted and tumbled forward so as to minimize shear forces on the underlying geosynthetic. The dozer should not be allowed to "crowd" the blade into the granular material and drag it over the surface of the underlying geosynthetic material.

Granular materials are often placed with a backhoe in small, isolated areas such as sumps and on side slopes. Some drainage materials may even be placed by hand, e.g., in sumps and around drainage pipes.

CQA personnel will position themselves in front of the working face of the placement operation to be able to observe the materials as they are spread and to ensure that there is no puncture or excessive wrinkling of underlying geosynthetic materials. CQA personnel will observe placement of the leachate collection layer to ensure that fine-grained soil is not accidentally mixed with drainage material.

5.6 DRAIN ROCK

A perforated pipe will be placed on the liner system and backfilled with the same leachate collection layer material. CQA personnel must carefully review the plans and specifications to ensure that the drainage components have been properly located in the trench prior to backfill.

5.7 PROTECTION

The main protection required for the leachate collection layer is to ensure that large pieces of waste material do not penetrate excessively into the layer and that fines do not contaminate the drainage layer. Therefore, another layer of material may be placed over the drainage layer to protect the drainage layer. This protective layer is often constructed with the same soil as the drainage layer. CQA personnel should review the project specifications and plans for protective soil and drainage layer requirements.

Wind-borne fines may contaminate drainage materials. Soil erosion from adjacent slopes may also lead to accumulation of fines in the drainage material. The CQA personnel cannot complete their job until the drainage material is fully covered and protected. Residual fines may be washed by rain from other soils, or the drainage material itself, during rain storms and accumulate in low areas. The accumulation of fines in sumps or other low points can reduce the effectiveness of the drainage system.

The Contractor shall utilize controls to minimize contamination of the drainage system. CQA personnel will observe the drainage layer to assure contamination by fines is not occurring.

END OF SECTION

INFORMATIONAL COPY ONLY - NOT FOR BIDDING PURPOSES

6. MISCELLANEOUS GEOSYNTHETICS

6.1 INTRODUCTION

Geosynthetics such as geotextiles, geonets, and geogrids, are used to perform various functions such as filtration, reinforcement, cushioning, stormwater control, and liquid or gas transmission. Typical uses on this project are:

- Geotextile used for cushioning and protection of geomembranes.

6.2 GEOTEXTILES

6.2.1 Manufacturing

6.2.1.1 *Submittal Review*

All qualification statements, samples, product descriptions, and quality control certifications submitted by the manufacturer will be reviewed and initialed by the CQA personnel for conformance with the specifications.

6.2.1.2 *Receiving Inspections*

Visual observation of each shipment of geotextile will be performed when the material is received on the site to ensure that the correct material is received, that it is in accordance with reviewed submittals, is properly covered, and is not damaged. A checklist will be used to document observations. See Appendix A, Form R-1, for sample receiving checklists.

6.2.2 Handling

Geotextiles are the most sensitive of all geosynthetics to degradation induced by ultraviolet light exposure. All rolls of geotextiles, regardless of their type, must be enclosed in a protective wrapping that is opaque.

General observation will be performed during delivery, storage, and handling to ensure that:

- The protective wrapping prevents exposure of the geotextile to ultraviolet light.
- The geotextile rolls, core, and protective wrap are not damaged.
- The rolls are not stacked in a manner that will cause damage.

The visual observations will be documented on the daily reports when applicable.

6.2.3 Installation

Visual observation will be performed during installation to ensure that:

- The underlying soil or geosynthetic has been approved for placement of the geotextiles.
- The construction equipment deploying the rolls does not damage the underlying soil or geosynthetic.
- Underlying geosynthetic materials do not have unacceptable folds, wrinkles, or other undulations that will be trapped under the geotextile.

INFORMATIONAL COPY ONLY - NOT FOR BIDDING PURPOSES

- Care is being taken to unroll the geotextile close to its intended and final position to minimize dragging material into place.
- Wrinkles and folds are minimized.
- Trimming of the geotextile is performed using only an upward-cutting hook blade to protect underlying geomembrane, if it exists.
- Rocks and other deleterious material that may cause damage are not trapped beneath the geotextile.
- Seaming is performed in accordance with the specifications.
- All damage is identified and repaired in accordance with the specifications.

This visual observation will be documented on daily checklists for each area being installed. See Appendix A, Form I-3, for a sample checklist.

6.2.4 Backfilling or Covering

Geotextiles should be covered before ultraviolet light causes significant degradation. Generally, this is within 14 days for polypropylene and 28 days for polyester geotextiles.

Visual observation of covering with geosynthetics or soil backfilling will be performed by CQA personnel. At least one CQA observer will be in each area where and when this work is being performed. Visual observations will be performed to ensure that:

- The geotextile is approved for covering by CQA personnel.
- The geotextile is covered by the next overlying layer of soil or geosynthetics within the time period stipulated in the specifications.
- Oversized or other deleterious materials that may damage the geotextile are identified and removed from the soil.
- The initial lift height of the soil is greater than or equal to the specified height.
- The type of equipment and soil placement methods are in accordance with the specifications.
- Construction equipment does not operate directly on the geotextile.
- The direction/method of soil placement is in accordance with the specifications (i.e., from bottom to top on slopes).

This visual observation will be documented on daily checklists for each area being covered or backfilled. See Appendix A, Form I-6, for a sample checklist.

END OF SECTION

INFORMATIONAL COPY ONLY - NOT FOR BIDDING PURPOSES

7. VACANT – Final cover soils

INFORMATIONAL COPY ONLY - NOT FOR BIDDING PURPOSES

INFORMATIONAL COPY ONLY - NOT FOR BIDDING PURPOSES

8. APPURTENANCES

8.1 INTRODUCTION

Appurtenances necessary for the proper functioning of the leachate collection and landfill gas systems on this project include:

- HDPE pipe and fittings for leachate collection, conveyance, and cleanouts.
- HDPE pipe and fittings for landfill gas collection system.

8.2 Systems PIPE AND FITTINGS

8.2.1 Submittal Review

All qualification statements, samples, product descriptions, and quality control certifications submitted by the manufacturer will be reviewed and initialed by the CQA personnel for conformance with the specifications and approved submittals.

8.2.2 Receiving Inspections

Visual observation of each shipment of pipe and the manhole will be performed when the material is received on the site to ensure that the correct material and product certification is received, that it is in accordance with reviewed submittals, and is not damaged. A checklist will be used to document observations. See Appendix A, Form R-2, for sample receiving checklists.

8.2.3 Handling

General observation will be performed during delivery, storage, and handling to ensure that:

- The pipe is the specified size and material.
- The pipe and manhole are not damaged.
- The pallets of pipe are not stacked higher than allowed by the manufacturer's recommendations (generally three high).
- Outdoor storage is not longer than allowed by the manufacturer's recommendations (generally 12 months) unless temporary covering is provided.

The visual observations will be documented on the daily reports when applicable.

8.2.4 Installation

Proper backfill of soils around the pipe and manhole is important to prevent subsidence of the pipe while in service.

General observation will be performed during pipe installation to ensure that:

- The soil beneath, around, and above the pipe and manhole meets the requirements of the specifications and is placed and compacted in accordance with the specifications.
- The pipe and manhole is free of unacceptable nicks, gouges, or other damage.
- The inside of pipe and manhole is free of shavings, perforation plugs, dirt, rocks, or other deleterious materials prior to welding.
- The pipe and manhole is laid to the proper horizontal and vertical alignment.

INFORMATIONAL COPY ONLY - NOT FOR BIDDING PURPOSES

- Pipe fittings and all joints are installed in accordance with the specifications.
- All testing is performed in accordance with the specifications.

END OF SECTION

INFORMATIONAL COPY ONLY - NOT FOR BIDDING PURPOSES

APPENDIX A

CQA Forms

INFORMATIONAL COPY ONLY - NOT FOR BIDDING PURPOSES

LIST OF FORMS

PROJECT FORMS

93-41 Daily Observation Report and Continuation Page

90-32 Construction Meeting Summary

90-2 Submittal Requirements

90-10 Shop Drawing Transmittal

90-9 Contract Change Order

RECEIVING INSPECTION

R-1 Geosynthetics Receiving Inspection Checklist

R-2 Pipe and Fittings Receiving Inspection Checklist

R-3 Ledger Geosynthetic Panels/Rolls Received

INSTALLATION INSPECTION

I-1 Geomembrane Panel

I-2 Destructive Seam Test Ledger

I-3 Installation Inspection Geonet/Geonet Composite/Geotextile

I-4 Installation Inspection Geosynthetic Clay Liner (GCL)

I-5 Installation Inspection Pipe and Fittings

I-6 Installation Inspection Soil Backfilling

I-7 Certificate of Acceptance of Soil Subgrade Surface

I-8 Trial Seam Test Ledger

MISCELLANEOUS

M-1 Problem Reporting and Corrective Action

M-2 Independent Geomembrane Testing Transmittal

INFORMATIONAL COPY ONLY - NOT FOR BIDDING PURPOSES

DAILY OBSERVATION REPORT

Project: _____ Report _____

Owner: _____ Page 1 of _____

Contractor: _____ Date: _____

Contractor's Rep./Title: _____ Day: _____

Weather A.M.: _____ °F P.M.: _____ °F Site Conditions: (Good) (Fair) (Poor) _____

Location and Type of Work:

Number and Classification of Contractors, Men, and Equipment (include condition of equipment):

Work in Progress (include report of operations, materials received and condition, work start/stop time, and any unusual conditions):

Work Completed:

Discrepancies Noted: (Non-conformance Report #_____)

Discussions with Contractor (include orders given and received):

Any Cause for Dispute, Change Orders, or Delays, and Reasons:

Extra Work in Progress–Description (include Extra Work Report Form):

Items for Office Action:

Visitors:

INFORMATIONAL COPY ONLY - NOT FOR BIDDING PURPOSES

Report _____

Page _____ of _____

Date: _____

Notes Continued:

INFORMATIONAL COPY ONLY - NOT FOR BIDDING PURPOSES

CONSTRUCTION MEETING SUMMARY

Owner: _____ Project No.: _____

Contractor: _____ Meeting Date: _____

Contract: _____ Meeting Location: _____

Attendance Taken: ☐ Yes ☐ No

The following is intended to provide a summary of essential items discussed during the meeting. Any party questioning the accuracy or completeness must bring it to the attention of Parametrix, Inc. within one week of receipt.

ITEMS OF DISCUSSION

1. Corrections to last "CONSTRUCTION MEETING SUMMARY" ☐ None required

2. Is work on schedule? ☐ Yes ☐ No (If No, list reason):

3. Is Contractor's schedule up to date? ☐ Yes ☐ No (If No, Contractor must submit updated schedule.):

4. Submittal Status:

5. Health and Safety Issues:

6. New Work Items:

7. Construction ☐ problems or ☐ claims:

8. Outstanding Issues Needing Attention:

9. Other:

INFORMATIONAL COPY ONLY - NOT FOR BIDDING PURPOSES

SUBMITTAL REQUIREMENT

Sumner **Kirkland** **Bremerton** **Portland**

Owner _____

Project Desc. _____

_____

Project No. _____

Contractor: _____

Specification Paragraph Number	Description	Submittal Requirement	Review Req'd. by	Date Review Completed	Transmittal Number

INFORMATIONAL COPY ONLY - NOT FOR BIDDING PURPOSES

Specification Paragraph Number	Description	Submittal Requirement	Review Req'd. by	Date Review Completed	Transmittal Number

INFORMATIONAL COPY ONLY - NOT FOR BIDDING PURPOSES

SHOP DRAWING TRANSMITTAL

To: Parametrix, Inc.

Address:

Attn:

Transmittal No.: _____

Date: _____

Project: _____ Project No.: _____

Owner: _____ Location: _____

Previous Transmittal No. (if resubmitted) _____

Qty.	Spec. Paragraph Number	Spec. Page No.	Item Description and Use	Manufacturer	Dwg. No(s).	Approval Status (Engineer)

By this submittal, the Contractor represents that he has determined and verified all field measurements, field construction criteria, materials, catalog numbers and similar data, or will do so, and that he has checked and coordinated each Shop Drawing with the project requirements and the Contract Documents. Deviations from the Contract Documents are noted below.

DEVIATIONS:

Contractor _____ Signature _____

(THIS SPACE FOR ENGINEER)

To: _____ Date: _____

_____

_____

Enclosed are _____ copies of the above item. Approval status as noted above is in accordance with the following legend:

A. No Exceptions Taken

B. Make Corrections Noted

C. Rejected

D. Revise and Resubmit

E. Submit Specified Item

PARAMETRIX, INC.

By: _____

cc: _____

INFORMATIONAL COPY ONLY - NOT FOR BIDDING PURPOSES

CONTRACT CHANGE ORDER

Parametrix, Inc.

	Date:
	Contract No.:
	Change Order No.:
Project Name	Project No.:
To (Contractor):	Location:

Upon approval by the Owner, you are hereby requested to comply with the following changes from the contract plans and specifications:

Item No.	Description of changes – quantities, units, unit prices, change in completion schedule, etc.	Increase in Contract Price	Decrease in Contract Price
	Subtotal – Increase	$	
	Subtotal – Decrease		$
	____% Tax	$	$
	Total (increase) (decrease)	$	$
	Net (increase) (decrease) Contract Price	$	$

The sum of $ is hereby (added to) (deducted from) the total contract price, and the total adjusted contract price to date thereby is $.

The time provided for completion in the contract is (unchanged) (increased) (decreased) by (calendar) (work) days. This document shall become an amendment to the contract and all provisions of the contract will apply hereto.

Recommended by Engineer:	Date:
Accepted by Contractor:	Date:
Approved by Owner:	Date:

FORM 90-9 (1/00)

INFORMATIONAL COPY ONLY - NOT FOR BIDDING PURPOSES

One Form Per Delivery

PMX

GEOSYNTHETICS RECEIVING INSPECTION CHECKLIST

Form R-1

Project Name: _____ **PMX #** _____

Date Received: _____

Inspected by: _____

Storage Location: _____

Delivery Number:

TYPE OF MATERIAL:

- ☐ Geomembrane
- ☐ Geonet
- ☐ Geonet Composite
- ☐ Geotextile
- ☐ GCL

		NOTE NO.
Manufacturer		
Manufacturer's Designation		
Number of Rolls Delivered		
Roll Identification Numbers (If Applicable)		

(Provide explanatory notes if the answer to any of the following questions is "no." Include any remedial steps required.)

	YES	NO	NOTE NO.
Is the material properly covered?	☐	☐	
Is the material free of apparent damage?	☐	☐	
Is there an approved submittal?	☐	☐	
Has the manufacturer's quality control documentation been reviewed?	☐	☐	
Is the material stored according to mfr. recommendations and/or specifications?	☐	☐	
Have conformance samples been sent to the laboratory?	☐	☐	

NOTES:

GENERAL NOTE: The information presented herein represents the inspector's opinion of the Contractor's(s) adherence to requirements of the Drawings and Specifications. This shall not be relied upon as acceptance of the work nor shall it relieve the Contractor from contractual obligations and responsibilities, or generally accepted industry or customary practice.

INFORMATIONAL COPY ONLY - NOT FOR BIDDING PURPOSES

One Form Per Delivery

PMX

PIPE RECEIVING INSPECTION CHECKLIST

Form R-2

Project Name: _____ **PMX #** _____

Date Received: _____

Inspected by: _____

Storage Location: _____

Delivery Number: _____

TYPE OF MATERIAL:

☐ PVC
☐ HDPE

		Note No.
Manufacturer		
Manufacturer's Designation		
Amount Delivered		

(Provide explanatory notes if the answer to any of the following questions is "no." Include any remedial steps required.)

	YES	NO	NOTE NO.
Is the pipe free of apparent damage?	☐	☐	
Is there an approved submittal?	☐	☐	
Has the manufacturer's certification been reviewed?	☐	☐	
Is the material stored according to mfr. recommendations and/or specifications?	☐	☐	

NOTES:

GENERAL NOTE: The information presented herein represents the inspector's opinion of the Contractor's(s) adherence to requirements of the Drawings and Specifications. This shall not be relied upon as acceptance of the work nor shall it relieve the Contractor from contractual obligations and responsibilities, or generally accepted industry or customary practice.

INFORMATIONAL COPY ONLY - NOT FOR BIDDING PURPOSES

One Form Per Material Type

PMX

LEDGER GEOSYNTHETIC PANELS/ROLLS RECEIVED

Form R-3

Project Name: _____ **PMX #** _____

TYPE OF MATERIAL:

- ☐ Geomembrane
- ☐ Geonet
- ☐ Geonet Composite
- ☐ GCL

Delivery #	Date Received	Date Checked	Panel/Roll #s	Form R-1 Completed?	Inspector/Comments
				☐	
				☐	
				☐	
				☐	
				☐	
				☐	
				☐	
				☐	
				☐	
				☐	
				☐	
				☐	
				☐	
				☐	
				☐	
				☐	
				☐	
				☐	

NOTES:

GENERAL NOTE: The information presented herein represents the inspector's opinion of the Contractor's(s) adherence to requirements of the Drawings and Specifications. This shall not be relied upon as acceptance of the work nor shall it relieve the Contractor from contractual obligations and responsibilities, or generally accepted industry or customary practice.

INFORMATIONAL COPY ONLY - NOT FOR BIDDING PURPOSES

PMX

NEXT PANEL # ( )

North ° Arrow	GEOMEMBRANE PANEL # _____ Form I-1

PRE-DEPLOYMENT CONDITIONS		
	Date	Condition
Geomembrane		
Weather		
Subgrade		

PROJECT NAME
PMX #

VISUAL OBSERVATIONS

DEPLOYMENT
Geomembrane Roll #
Date:
Time:

AIR/VACUUM TESTING					
Date	AT/AL/VT	Distance Tested From	Distance Tested To	Tech.	Pass/ Fail
		Cross Seam			

( )LF

NEXT PANEL # ( )

WELDS FOR PATCHES					
Date	Time	Tech	Mach.#	Location	Pass VT

DESTRUCTIVE SAMPLE		
Sample #	Date Removed	Results: Pass/Fail

LEGEND

⊗	=	Patch
AT	=	Air Test (Pressure)
AL	=	Air Lance Test
VT	=	Vacuum Test
PH	=	Pinhole
DS	=	Destructive Sample
☐	=	Destructive Sample
~	=	Extrusion Weld
N/A	=	Not Applicable

FINAL OBSERVATION:

APPROVED FOR COVERING:

_____

Date Time

OBSERVED BY:

_____

Signature of CQA Personnel

INFORMATIONAL COPY ONLY - NOT FOR BIDDING PURPOSES

PMX

Form I-2

Project Name: _____

PMX #: _____

DESTRUCTIVE SEAM TEST LEDGER

Date	Sample I.D.#	Seam I.D.#	Weld Type*	Machine I.D.#	Welder I.D.	Installer's Test Results (P/F)	3rd Party Lab Results (P/F)	Comments

* F.W. = Fusion Weld
E.W. = Extrusion Weld
C.W. = Chemical Weld

INFORMATIONAL COPY ONLY - NOT FOR BIDDING PURPOSES

One Form Per Shift Per Area

PMX

INSTALLATION INSPECTION
GEONET/GEONET COMPOSITE/GEOTEXTILE

Form I-3

Project Name: _____ **PMX #** _____

Date: _____

Inspector: _____
(Signature)

Weather: _____

Temperature:

Location and quantity installed during shift:

TYPE OF MATERIAL:

- ☐ Geonet
- ☐ Geonet Composite
- ☐ Geotextile

(Provide explanatory notes if the answer to any of the following questions is "no." Include any remedial steps required.)

	YES	NO	NOTE NO.
Is the underlying material approved and free from apparent damaging material?	☐	☐	_____
Is the material installed in a manner that appears to prevent damage to underlying materials?	☐	☐	_____
Is dragging of the material minimized?	☐	☐	_____
Is the material installed with its longest dimension oriented up and down the slope?	☐	☐	_____
Is the material free from apparent folds, damage, dirt, and debris?	☐	☐	_____
Is the material installed over a smooth/clean surface?	☐	☐	_____
Are seams lapped, tied, and/or sewn according to specifications?	☐	☐	_____
Have all required repairs been completed?	☐	☐	_____

NOTES:

GENERAL NOTE: The information presented herein represents the inspector's opinion of the Contractor's(s) adherence to requirements of the Drawings and Specifications. This shall not be relied upon as acceptance of the work nor shall it relieve the Contractor from contractual obligations and responsibilities, or generally accepted industry or customary practice.

INFORMATIONAL COPY ONLY - NOT FOR BIDDING PURPOSES

One Form Per Shift Per Area

PMX

INSTALLATION INSPECTION
GEOSYNTHETIC CLAY LINER (GCL)

Form I-4

Project Name: _____ **PMX #** _____

Date: _____ Weather: _____

Inspector: _____ Temperature: _____
(Signature)

Location and quantity of GCL installed during shift:

_____

(Provide explanatory notes if the answer to any of the following questions is "no." Include any remedial steps required.)

	YES	NO	NOTE NO.
Is the underlying material approved and free from apparent damaging material?	☐	☐	_____
Is the GCL free from apparent damage after it is unrolled?	☐	☐	_____
Is the GCL installed in a manner that prevents apparent damage to underlying materials?	☐	☐	_____
Is dragging of the GCL minimized?	☐	☐	_____
Is the GCL installed with its longest dimension oriented up and down the slope?	☐	☐	_____
Are seams lapped and prepared according to specifications?	☐	☐	_____
Are horizontal seams on side slopes kept to a minimum?	☐	☐	_____
Are there any creases or irregularities in the placed GCL or underlying geosynthetics?	☐	☐	_____
Are the GCLs being properly protected from moisture?	☐	☐	_____
Is loss of clay material at cut edges minimized?	☐	☐	_____
Have all required repairs been completed?	☐	☐	_____

NOTES:

GENERAL NOTE: The information presented herein represents the inspector's opinion of the Contractor's(s) adherence to requirements of the Drawings and Specifications. This shall not be relied upon as acceptance of the work nor shall it relieve the Contractor from contractual obligations and responsibilities, or generally accepted industry or customary practice.

INFORMATIONAL COPY ONLY - NOT FOR BIDDING PURPOSES

One Form Per Shift

PMX

INSTALLATION INSPECTION
PIPE AND FITTINGS

Form I-5

Project Name:

PMX #

Date: _____ Weather: _____

Inspector: _____ Temperature: _____
(Signature)

Location and quantity of pipe installed during shift:

_____

(Provide explanatory notes if the answer to any of the following questions is "no." Include any remedial steps required.)

	YES	NO	NOTE NO.
Is the pipe installed in a manner that appears to prevent damage to underlying materials?	☐	☐	_____
Is the pipe free of apparent defects, dirt, and debris?	☐	☐	_____
Does the pipe appear to be properly joined?	☐	☐	_____
Is the layout and location of the pipe installed in general accordance with Drawings?	☐	☐	_____
Is associated geotextile, backfill, and compaction in accordance with specifications?	☐	☐	_____

NOTES:

GENERAL NOTE: The information presented herein represents the inspector's opinion of the Contractor's(s) adherence to requirements of the Drawings and Specifications. This shall not be relied upon as acceptance of the work nor shall it relieve the Contractor from contractual obligations and responsibilities, or generally accepted industry or customary practice.

INFORMATIONAL COPY ONLY - NOT FOR BIDDING PURPOSES

One Form Per Shift Per Area

PMX

INSTALLATION INSPECTION
SOIL BACKFILLING

Form I-6

Project Name:

PMX #

Date: _____

Inspector: _____
(Signature)

Weather: _____

Temperature: _____

TYPE OF MATERIAL:

- ☐ Drainage Soil
- ☐ Cover Soil
- ☐ Top Soil
- ☐ Compacted Clay Soil

Location and quantity of soil placed during shift:

(Provide explanatory notes if the answer to any of the following questions is "no." Include any remedial steps required.)

	YES	NO	NOTE NO.
Is the underlying geosynthetic approved for covering?	☐	☐	
Does the soil appear to be free of over-sized and other deleterious material?	☐	☐	
Does the initial lift thickness appear to meet or exceed the specified thickness?	☐	☐	
Is the soil placed in a manner that appears to prevent damage to and minimize wrinkles in underlying geosynthetics?	☐	☐	

NOTES:

GENERAL NOTE: The information presented herein represents the inspector's opinion of the Contractor's(s) adherence to requirements of the Drawings and Specifications. This shall not be relied upon as acceptance of the work nor shall it relieve the Contractor from contractual obligations and responsibilities, or generally accepted industry or customary practice.

INFORMATIONAL COPY ONLY - NOT FOR BIDDING PURPOSES

One Form Per Shift

PMX

Form I-7

CERTIFICATE OF ACCEPTANCE OF SOIL SUBGRADE SURFACE

PROJECT NAME: _____

PMX NUMBER: _____

OWNER: _____

LOCATION: _____

I, the undersigned, a duly appointed representative of _____ (installer), have visually observed the soil subgrade surface described below, and found it to be an acceptable surface on which to install geomembrane.

This certification is based on observations of the surface of the subgrade only. No subterranean inspections or tests have been performed, and no representations or warranties regarding conditions that may exist below the surface of the subgrade are made.

Area Being Accepted: _____

_____

_____

_____

_____

Date: _____

Signature: _____

Name: _____

Title: _____

INFORMATIONAL COPY ONLY - NOT FOR BIDDING PURPOSES

Form I-8

TRIAL SEAM TEST LEDGER

Project Name: _____ **Shear Strength** _____ ppi

PMX # _____ **Peel Strength** _____ ppi

		Welding		Test Pass/Fail				
Date	Time	Crew	Mach. #	Shear	Peel	Retest	Inspector	Comments

NOTES:

GENERAL NOTE: The information presented herein represents the inspector's opinion of the Contractor's(s) adherence to requirements of the Drawings and Specifications. This shall not be relied upon as acceptance of the work nor shall it relieve the Contractor from contractual obligations and responsibilities, or generally accepted industry or customary practice.

INFORMATIONAL COPY ONLY - NOT FOR BIDDING PURPOSES

PMX

PROBLEM REPORTING AND CORRECTIVE ACTION **Form M-1**

Project Name: _____ **PMX #** _____

Problem Report #: Date:

Description of Problem: _____

_____

_____

Problem Location: _____

_____

_____

_____

Problem Noted By: _____

_____

_____

_____

_____

Signature of CQA Inspector/Date

Description of corrective action taken: _____

_____

_____

_____

Date corrective action was completed: _____

Corrective action approved by: _____

_____

Signature of CQA Inspector who observed corrective action

CQA Engineer

GENERAL NOTE: The information presented herein represents the inspector's opinion of the Contractor's(s) adherence to requirements of the Drawings and Specifications. This shall not be relied upon as acceptance of the work nor shall it relieve the Contractor from contractual obligations and responsibilities, or generally accepted industry or customary practice.

INFORMATIONAL COPY ONLY - NOT FOR BIDDING PURPOSES

PMX

INDEPENDENT GEOMEMBRANE TESTING TRANSMITTAL **Form M-2**

Project Name: _____ **PMX #** _____

Lab Name: _____ Phone: _____

Address: _____ Fax #: _____

_____

SAMPLES ENCLOSED:

Destructive Test (Seam) Samples # _____

_____

Please perform shear, peel, and thickness tests (seam package) per our testing agreement.

- Conformance Test Samples # _____

_____

Please perform conformance testing per our testing agreement.

Fax results to: Site (Name/Fax) _____ , and

Office (Name/Fax) _____

Mail results to: Name _____

Address _____

_____

_____

_____ _____

Signature Date

INFORMATIONAL COPY ONLY - NOT FOR BIDDING PURPOSES

APPENDIX B

Prevailing Wage Rates

INFORMATIONAL COPY ONLY - NOT FOR BIDDING PURPOSES

State of Washington
Department of Labor & Industries

Prevailing Wage Section - Telephone 360-902-5335
PO Box 44540, Olympia, WA 98504-4540

Washington State Prevailing Wage

The PREVAILING WAGES listed here include both the hourly wage rate and the hourly rate of fringe benefits. On public works projects, worker's wage and benefit rates must add to not less than this total. A brief description of overtime calculation requirements are provided on the Benefit Code Key.

Prevailing wage rates which have been published On: 2/3/2020 and will be effective from: 3/4/2020

County	Trade	Job Classification	Wage	Holiday	Overtime	Note
Grant	Asbestos Abatement Workers	Journey Level	$41.04	5D	1H	
Grant	Boilermakers	Journey Level	$69.29	5N	1C	
Grant	Brick Mason	Journey Level	$50.44	5A	1M	
Grant	Building Service Employees	Janitor	$13.50		1	
Grant	Building Service Employees	Shampooer	$13.50		1	
Grant	Building Service Employees	Waxer	$13.50		1	
Grant	Building Service Employees	Window Cleaner	$13.50		1	
Grant	Cabinet Makers (In Shop)	Journey Level	$13.50		1	
Grant	Carpenters	Acoustical Worker	$47.37	7E	4X	8N
Grant	Carpenters	Bridge, Dock & Wharf Carpenter	$48.57	7E	4X	8N
Grant	Carpenters	Floor Layer & Floor Finisher	$47.37	7E	4X	8N
Grant	Carpenters	Form Builder	$47.37	7E	4X	8N
Grant	Carpenters	General Carpenter	$47.37	7E	4X	8N
Grant	Carpenters	Heavy Construction Carpenter	$52.35	7E	4X	9E
Grant	Carpenters	Scaffold/Shoring Erecting & Dismantling	$52.35	7E	4X	8N
Grant	Cement Masons	Journey Level	$45.14	7B	1N	
Grant	Divers & Tenders	Assistant Tender	$54.54	7E	4X	
Grant	Divers & Tenders	Dive Supervisors	$100.84	7E	4X	
Grant	Divers & Tenders	Diver	$99.34	7E	4X	8V
Grant	Divers & Tenders	Diver on Standby	$58.11	7E	4X	
Grant	Divers & Tenders	Diver Tender	$57.11	7E	4X	
Grant	Divers & Tenders	Diving Master	$67.86	7E	4X	
Grant	Divers & Tenders	Manifold Operator	$57.11	7E	4X	
Grant	Divers & Tenders	Manifold Operator Mixed Gas	$61.11	7E	4X	

INFORMATIONAL COPY ONLY - NOT FOR BIDDING PURPOSES

Grant	Divers & Tenders	Remote Operated Vehicle Operator	$57.11	7E	4X	
Grant	Divers & Tenders	Remote Operated Vehicle Tender/Technician	$54.54	7E	4X	
Grant	Divers & Tenders	Surface RCV & ROV Operator	$57.11	7E	4X	
Grant	Dredge Workers	Assistant Engineer	$56.44	5D	3F	
Grant	Dredge Workers	Assistant Mate (Deckhand)	$56.00	5D	3F	
Grant	Dredge Workers	Boatmen	$56.44	5D	3F	
Grant	Dredge Workers	Engineer Welder	$57.51	5D	3F	
Grant	Dredge Workers	Leverman, Hydraulic	$58.67	5D	3F	
Grant	Dredge Workers	Mates	$56.44	5D	3F	
Grant	Dredge Workers	Oiler	$56.00	5D	3F	
Grant	Drywall Applicator	Journey Level	$47.37	7E	4X	8N
Grant	Drywall Tapers	Journey Level	$42.54	7E	1P	
Grant	Electrical Fixture Maintenance Workers	Journey Level	$24.88		1	
Grant	Electricians - Inside	Cable Splicer	$72.98	7H	1E	
Grant	Electricians - Inside	Construction Stock Person	$36.47	7H	1D	
Grant	Electricians - Inside	Journey Level	$68.42	7H	1E	
Grant	Electricians - Motor Shop	Craftsman	$15.37		1	
Grant	Electricians - Motor Shop	Journey Level	$14.69		1	
Grant	Electricians - Powerline Construction	Cable Splicer	$82.39	5A	4D	
Grant	Electricians - Powerline Construction	Certified Line Welder	$75.64	5A	4D	
Grant	Electricians - Powerline Construction	Groundperson	$49.17	5A	4D	
Grant	Electricians - Powerline Construction	Heavy Line Equipment Operator	$75.64	5A	4D	
Grant	Electricians - Powerline Construction	Journey Level Lineperson	$75.64	5A	4D	
Grant	Electricians - Powerline Construction	Line Equipment Operator	$64.54	5A	4D	
Grant	Electricians - Powerline Construction	Meter Installer	$49.17	5A	4D	8W
Grant	Electricians - Powerline Construction	Pole Sprayer	$75.64	5A	4D	
Grant	Electricians - Powerline Construction	Powderperson	$56.49	5A	4D	
Grant	Electronic Technicians	Electronic Technicians Journey Level	$45.23	5B	1B	
Grant	Elevator Constructors	Mechanic	$97.31	7D	4A	
Grant	Elevator Constructors	Mechanic In Charge	$105.06	7D	4A	
Grant	Fabricated Precast Concrete Products	Journey Level	$13.50		1	
Grant			$13.50		1	

INFORMATIONAL COPY ONLY - NOT FOR BIDDING PURPOSES

	Fabricated Precast Concrete Products	Journey Level - In-Factory Work Only				
Grant	Fence Erectors	Fence Erector	$41.04	7B	1M	8Z
Grant	Fence Erectors	Fence Erector	$41.04	7B	1M	8Z
Grant	Flaggers	Journey Level	$38.94	7B	1M	8Z
Grant	Glaziers	Journey Level	$31.59	7L	4L	
Grant	Heat & Frost Insulators And Asbestos Workers	Journey Level	$51.04	5K	1U	
Grant	Heating Equipment Mechanics	Journey Level	$56.61	6Z	1B	
Grant	Hod Carriers & Mason Tenders	Journey Level	$40.85	7B	1M	8Z
Grant	Industrial Power Vacuum Cleaner	Journey Level	$13.50		1	
Grant	Inland Boatmen	Journey Level	$13.50		1	
Grant	Inspection/Cleaning/Sealing Of Sewer & Water Systems By Remote Control	Cleaner Operator, Foamer Operator	$13.50		1	
Grant	Inspection/Cleaning/Sealing Of Sewer & Water Systems By Remote Control	Grout Truck Operator	$13.50		1	
Grant	Inspection/Cleaning/Sealing Of Sewer & Water Systems By Remote Control	Head Operator	$13.50		1	
Grant	Inspection/Cleaning/Sealing Of Sewer & Water Systems By Remote Control	Technician	$13.50		1	
Grant	Inspection/Cleaning/Sealing Of Sewer & Water Systems By Remote Control	Tv Truck Operator	$13.50		1	
Grant	Insulation Applicators	Journey Level	$47.37	7E	4X	8N
Grant	Ironworkers	Journeyman	$63.06	7N	1O	
Grant	Laborers	Air And Hydraulic Track Drill	$41.58	7B	1M	8Z
Grant	Laborers	Asphalt Raker	$41.58	7B	1M	8Z
Grant	Laborers	Asphalt Roller, Walking	$41.31	7B	1M	8Z
Grant	Laborers	Brick Pavers	$41.04	7B	1M	8Z
Grant	Laborers	Brush Hog Feeder	$41.04	7B	1M	8Z
Grant	Laborers	Brush Machine	$41.58	7B	1M	8Z
Grant	Laborers	Caisson Worker, Free Air	$41.58	7B	1M	8Z
Grant	Laborers	Carpenter Tender	$41.04	7B	1M	8Z
Grant	Laborers	Cement Finisher Tender	$41.31	7B	1M	8Z
Grant	Laborers	Cement Handler	$41.04	7B	1M	8Z
Grant	Laborers	Chain Saw Operator & Faller	$41.58	7B	1M	8Z
Grant	Laborers	Clean-up Laborer	$41.04	7B	1M	8Z
Grant	Laborers	Compaction Equipment	$41.31	7B	1M	8Z
Grant	Laborers	Concrete Crewman	$41.04	7B	1M	8Z
Grant	Laborers	Concrete Saw, Walking	$41.31	7B	1M	8Z

INFORMATIONAL COPY ONLY - NOT FOR BIDDING PURPOSES

Grant	Laborers	Concrete Signalman	$41.04	7B	1M	8Z
Grant	Laborers	Concrete Stack	$41.58	7B	1M	8Z
Grant	Laborers	Confined Space Attendant	$41.04	7B	1M	8Z
Grant	Laborers	Crusher Feeder	$41.04	7B	1M	8Z
Grant	Laborers	Demolition	$41.04	7B	1M	8Z
Grant	Laborers	Demolition Torch	$41.31	7B	1M	8Z
Grant	Laborers	Dope Pot Fireman, Non-mechanical	$41.31	7B	1M	8Z
Grant	Laborers	Driller Helper (when Required To Move & Position Machine)	$41.31	7B	1M	8Z
Grant	Laborers	Drills With Dual Masts	$41.86	7B	1M	8Z
Grant	Laborers	Dry Stack Walls	$41.04	7B	1M	8Z
Grant	Laborers	Dumpman	$41.04	7B	1M	8Z
Grant	Laborers	Erosion Control Laborer	$41.04	7B	1M	8Z
Grant	Laborers	Final Detail Cleanup (i.e, Dusting, Vacuuming, Window Cleaning; Not Construction Debris Cleanup)	$38.94	7B	1M	8Z
Grant	Laborers	Firewatch	$41.04	7B	1M	8Z
Grant	Laborers	Form Cleaning Machine Feeder, Stacker	$41.04	7B	1M	8Z
Grant	Laborers	Form Setter, Paving	$41.31	7B	1M	8Z
Grant	Laborers	General Laborer	$41.04	7B	1M	8Z
Grant	Laborers	Grade Checker	$43.57	7B	1M	8Z
Grant	Laborers	Grout Machine Header Tender	$41.04	7B	1M	8Z
Grant	Laborers	Guard Rail	$41.04	7B	1M	8Z
Grant	Laborers	Gunite	$41.58	7B	1M	8Z
Grant	Laborers	Hazardous Waste Worker (level A)	$41.86	7B	1M	8Z
Grant	Laborers	Hazardous Waste Worker (level B)	$41.58	7B	1M	8Z
Grant	Laborers	Hazardous Waste Worker (level C)	$41.31	7B	1M	8Z
Grant	Laborers	Hazardous Waste Worker (level D)	$41.04	7B	1M	8Z
Grant	Laborers	Hdpe Or Similar Liner Installer	$41.04	7B	1M	8Z
Grant	Laborers	High Scaler	$41.58	7B	1M	8Z
Grant	Laborers	Jackhammer Operator Miner, Class "b"	$41.31	7B	1M	8Z
Grant	Laborers	Laser Beam Operator	$41.58	7B	1M	8Z
Grant	Laborers	Miner, Class "a"	$41.04	7B	1M	8Z
Grant	Laborers	Miner, Class "c"	$41.58	7B	1M	8Z
Grant	Laborers	Miner, Class "d"	$41.86	7B	1M	8Z
Grant	Laborers		$41.58	7B	1M	8Z

INFORMATIONAL COPY ONLY NOT FOR BIDDING PURPOSES

		Monitor Operator, Air Track Or Similar Mounting				
Grant	Laborers	Mortar Mixer	$41.58	7B	1M	8Z
Grant	Laborers	Nipper	$41.04	7B	1M	8Z
Grant	Laborers	Nozzleman	$41.58	7B	1M	8Z
Grant	Laborers	Nozzleman, Water (to Include Fire Hose), Air Or Steam	$41.31	7B	1M	8Z
Grant	Laborers	Pavement Breaker, 90 Lbs. & Over	$41.58	7B	1M	8Z
Grant	Laborers	Pavement Breaker, Under 90 Lbs.	$41.31	7B	1M	8Z
Grant	Laborers	Pipelayer	$41.58	7B	1M	8Z
Grant	Laborers	Pipelayer, Corrugated Metal Culvert And Multi-plate.	$41.31	7B	1M	8Z
Grant	Laborers	Pipewrapper	$41.58	7B	1M	8Z
Grant	Laborers	Plasterer Tenders	$41.58	7B	1M	8Z
Grant	Laborers	Pot Tender	$41.31	7B	1M	8Z
Grant	Laborers	Powderman	$43.23	7B	1M	8Z
Grant	Laborers	Powederman Helper	$41.31	7B	1M	8Z
Grant	Laborers	Power Buggy Operator	$41.31	7B	1M	8Z
Grant	Laborers	Power Tool Operator, Gas, Electric, Pneumatic	$41.31	7B	1M	8Z
Grant	Laborers	Railroad Equipment, Power Driven, Except Dual Mobile	$41.31	7B	1M	8Z
Grant	Laborers	Railroad Power Spiker Or Puller, Dual Mobile	$41.31	7B	1M	8Z
Grant	Laborers	Remote Equipment Operator	$41.86	7B	1M	8Z
Grant	Laborers	Remote Equipment Operator (i.e Compaction And Demolition)	$41.31	7B	1M	8Z
Grant	Laborers	Rigger/signal Person	$41.31	7B	1M	8Z
Grant	Laborers	Riprap Person	$41.04	7B	1M	8Z
Grant	Laborers	Rodder & Spreader	$41.31	7B	1M	8Z
Grant	Laborers	Sandblast Tailhoseman	$41.04	7B	1M	8Z
Grant	Laborers	Scaffold Erector, Wood Or Steel	$41.04	7B	1M	8Z
Grant	Laborers	Stake Jumper	$41.04	7B	1M	8Z
Grant	Laborers	Structural Mover	$41.04	7B	1M	8Z
Grant	Laborers	Tailhoseman (water Nozzle)	$41.04	7B	1M	8Z
Grant	Laborers	Timber Bucker & Faller (by Hand)	$41.04	7B	1M	8Z
Grant	Laborers	Track Laborer (rr)	$41.04	7B	1M	8Z
Grant	Laborers	Traffic Control Laborer	$38.94	7B	1M	9D
Grant	Laborers	Traffic Control Supervisor	$39.94	7B	1M	9E

INFORMATIONAL COPY ONLY - NOT FOR BIDDING PURPOSES

Grant	Laborers	Trencher, Shawnee	$41.31	7B	1M	8Z
Grant	Laborers	Trenchless Technology Technician	$41.58	7B	1M	8Z
Grant	Laborers	Truck Loader	$41.04	7B	1M	8Z
Grant	Laborers	Tugger Operator	$41.31	7B	1M	8Z
Grant	Laborers	Vibrators, All	$41.58	7B	1M	8Z
Grant	Laborers	Wagon Drills	$41.31	7B	1M	8Z
Grant	Laborers	Water Pipe Liner	$41.31	7B	1M	8Z
Grant	Laborers	Welder, Electrical, Manual Or Automatic (hdpe Or Similar Pipe And Liner)	$41.86	7B	1M	8Z
Grant	Laborers	Well-point Person	$41.04	7B	1M	8Z
Grant	Laborers	Wheelbarrow, Power Driven	$41.31	7B	1M	8Z
Grant	Laborers - Underground Sewer & Water	General Laborer & Topman	$41.04	7B	1M	8Z
Grant	Laborers - Underground Sewer & Water	Pipe Layer	$41.58	7B	1M	8Z
Grant	Landscape Construction	Landscape Laborer	$38.94	7B	1M	9D
Grant	Landscape Construction	Landscape Operator	$46.85	7B	4W	9A
Grant	Landscape Maintenance	Groundskeeper	$13.50		1	
Grant	Lathers	Journey Level	$47.37	7E	4X	8N
Grant	Marble Setters	Journey Level	$50.44	5A	1M	
Grant	Metal Fabrication (In Shop)	Fitter	$13.50		1	
Grant	Metal Fabrication (In Shop)	Painter	$13.50		1	
Grant	Metal Fabrication (In Shop)	Welder	$13.50		1	
Grant	Millwright	Journey Level	$66.83	7E	4X	8N
Grant	Modular Buildings	Journey Level	$13.50		1	
Grant	Painters	Commercial Painter	$36.87	6Z	1W	
Grant	Painters	Industrial Painter	$45.37	6Z	1W	9D
Grant	Pile Driver	General Pile Driver	$48.57	7E	4X	8N
Grant	Pile Driver	Heavy Construction Pile Driver	$53.54	7E	4X	9E
Grant	Plasterers	Journey Level	$42.88	7K	1N	
Grant	Playground & Park Equipment Installers	Journey Level	$13.50		1	
Grant	Plumbers & Pipefitters	Journey Level	$82.94	6Z	1Q	
Grant	Power Equipment Operators	A-frame Truck (2 Or More Drums)	$46.69	7B	4W	9A
Grant	Power Equipment Operators	A-frame Truck (single Drum)	$46.08	7B	4W	9A
Grant	Power Equipment Operators	Asphalt Plant Operator	$47.29	7B	4W	9A
Grant	Power Equipment Operators	Assistant Plant Operator, Fireman Or Pugmixer (asphalt)	$46.08	7B	4W	9A
Grant	Power Equipment Operators	Assistant Refrigeration Plant & Chiller Operator (over 1000 Ton)	$46.69	7B	4W	9A

INFORMATIONAL COPY ONLY - NOT FOR BIDDING PURPOSES

Grant	Power Equipment Operators	Assistant Refrigeration Plant (under 1000 Ton)	$46.08	7B	4W	9A
Grant	Power Equipment Operators	Automatic Subgrader (ditches & Trimmers)	$47.29	7B	4W	9A
Grant	Power Equipment Operators	Backfillers (cleveland & Similar)	$46.69	7B	4W	9A
Grant	Power Equipment Operators	Backhoe & Hoe Ram (under 3/4 Yd.)	$47.01	7B	4W	9A
Grant	Power Equipment Operators	Backhoe (45,000 Gw & Under)	$47.01	7B	4W	9A
Grant	Power Equipment Operators	Backhoe (45,000 Gw To 110,000 Gw)	$47.29	7B	4W	9A
Grant	Power Equipment Operators	Backhoe (over 110,000 Gw)	$47.56	7B	4W	9A
Grant	Power Equipment Operators	Backhoes & Hoe Ram (3 Yds & Over)	$47.56	7B	4W	9A
Grant	Power Equipment Operators	Backhoes & Hoe Ram (3/4 Yd. To 3 Yd.)	$47.29	7B	4W	9A
Grant	Power Equipment Operators	Bagley Or Stationary Scraper	$46.08	7B	4W	9A
Grant	Power Equipment Operators	Batch & Wet Mix Operator (multiple Units, 2 & Incl. 4)	$47.29	7B	4W	9A
Grant	Power Equipment Operators	Batch Plant & Wet Mix Operator, Single Unit (concrete)	$46.69	7B	4W	9A
Grant	Power Equipment Operators	Batch Plant (over 4 Units)	$47.29	7B	4W	9A
Grant	Power Equipment Operators	Belt Finishing Machine	$46.08	7B	4W	9A
Grant	Power Equipment Operators	Belt Loader (kocal Or Similar)	$46.69	7B	4W	9A
Grant	Power Equipment Operators	Belt-crete Conveyors With Power Pack Or Similar	$46.69	7B	4W	9A
Grant	Power Equipment Operators	Bending Machine	$46.69	7B	4W	9A
Grant	Power Equipment Operators	Bit Grinders	$45.76	7B	4W	9A
Grant	Power Equipment Operators	Blade (finish & Bluetop), Automatic, Cmi, Abc, Finish Athey & Huber & Similar When Used As Automatic	$47.56	7B	4W	9A
Grant	Power Equipment Operators	Blade Operator (motor Patrol & Attachments)	$47.29	7B	4W	9A
Grant	Power Equipment Operators	Blower Operator (cement)	$46.08	7B	4W	9A
Grant	Power Equipment Operators	Boat Operator	$45.76	7B	4W	9A
Grant	Power Equipment Operators	Bob Cat (skid Steer)	$46.69	7B	4W	9A
Grant	Power Equipment Operators	Bolt Threading Machine	$45.76	7B	4W	9A
Grant	Power Equipment Operators	Boom Cats (side)	$47.29	7B	4W	9A
Grant	Power Equipment Operators	Boring Machine (earth)	$46.69	7B	4W	9A
Grant	Power Equipment Operators		$46.69	7B	4W	9A

INFORMATIONAL COPY ONLY - NOT FOR BIDDING PURPOSES

		Boring Machine (Rock Under 8 inch Bit - Quarry Master, Joy Or Similar)				
Grant	Power Equipment Operators	Boring Machine (Rock Under 8" Bit - Quarry Master, Joy Or Similar)	$46.69	7B	4W	9A
Grant	Power Equipment Operators	Boring Machine (rock Under 8" Bit) (quarry Master, Joy Or Similar)	$46.69	7B	4W	9A
Grant	Power Equipment Operators	Bump Cutter (wayne, Saginau Or Similar)	$46.69	7B	4W	9A
Grant	Power Equipment Operators	Cableway Controller (dispatcher)	$47.29	7B	4W	9A
Grant	Power Equipment Operators	Cableway Operators	$47.56	7B	4W	9A
Grant	Power Equipment Operators	Canal Lining Machine (concrete)	$46.69	7B	4W	9A
Grant	Power Equipment Operators	Carrydeck & Boom Truck (under 25 Tons)	$47.01	7B	4W	9A
Grant	Power Equipment Operators	Cement Hog	$46.08	7B	4W	9A
Grant	Power Equipment Operators	Chipper (without Crane) Cleaning & Doping Machine (pipeline)	$46.69	7B	4W	9A
Grant	Power Equipment Operators	Clamshell, Dragline	$48.66	7B	4W	9A
Grant	Power Equipment Operators	Compactor (self-propelled With Blade)	$47.29	7B	4W	9A
Grant	Power Equipment Operators	Compressor (2000 Cfm Or Over, 2 Or More, Gas Diesel Or Electric Power)	$46.08	7B	4W	9A
Grant	Power Equipment Operators	Compressors (under 2000 Cfm, Gas, Diesel Or Electric Power)	$45.76	7B	4W	9A
Grant	Power Equipment Operators	Concrete Cleaning / Decontamination Machine Operator	$47.56	7B	4W	9A
Grant	Power Equipment Operators	Concrete Pump Boon Truck	$47.29	7B	4W	9A
Grant	Power Equipment Operators	Concrete Pumps (squeeze-crete, Flow-crete, Whitman & Similar)	$46.85	7B	4W	9A
Grant	Power Equipment Operators	Concrete Saw (multiple Cut)	$46.08	7B	4W	9A
Grant	Power Equipment Operators	Concrete Slip Form Paver	$47.29	7B	4W	9A
Grant	Power Equipment Operators	Conveyor Aggregate Delivery Systems (c.a.d.)	$47.29	7B	4W	9A
Grant	Power Equipment Operators	Crane Oiler- Driver (cdl Required) & Cable Tender, Mucking Machine	$45.76	7B	4W	9A
Grant	Power Equipment Operators	Cranes (100 to 299 Tons) And All Climbing, Overhead, Rail & Tower. All Attachments Incl.	$49.16	7B	4W	9A

INFORMATIONAL COPY ONLY - NOT FOR BIDDING PURPOSES

Grant	Power Equipment Operators	Cranes (25 Tons & Under), All Attachments Incl. Clamshell, Dragline	$47.01	7B	4W	9A
Grant	Power Equipment Operators	Cranes (25 Tons To And Including 45 Tons), All Attachments Incl. Clamshell, Dragline	$47.29	7B	4W	9A
Grant	Power Equipment Operators	Cranes (300 Tons and Over) And All Climbing, Overhead, Rail & Tower. All Attachments Incl.	$49.66	7B	4W	9A
Grant	Power Equipment Operators	Cranes (45 Tons To 85 Tons), All Attachments Incl. Clamshell And Dragline	$47.56	7B	4W	9A
Grant	Power Equipment Operators	Cranes (86 to 99 Tons) And All Climbing, Overhead, Rail & Tower. All Attachments Incl.	$48.66	7B	4W	9A
Grant	Power Equipment Operators	Crusher Feeder	$45.76	7B	4W	9A
Grant	Power Equipment Operators	Crusher, Grizzle & Screening Plant Operator	$47.29	7B	4W	9A
Grant	Power Equipment Operators	Curb Extruder (asphalt Or Concrete)	$46.85	7B	4W	9A
Grant	Power Equipment Operators	Deck Engineer	$46.69	7B	4W	9A
Grant	Power Equipment Operators	Deck Hand	$45.76	7B	4W	9A
Grant	Power Equipment Operators	Derricks & Stifflegs (65 Tons & Over)	$47.56	7B	4W	9A
Grant	Power Equipment Operators	Derricks & Stifflegs (under 65 Tons)	$47.01	7B	4W	9A
Grant	Power Equipment Operators	Distributor Leverman	$46.08	7B	4W	9A
Grant	Power Equipment Operators	Ditch Witch Or Similar	$46.08	7B	4W	9A
Grant	Power Equipment Operators	Dope Pots (power Agitated	$46.08	7B	4W	9A
Grant	Power Equipment Operators	Dozer / Tractor (up To D-6 Or Equivalent) And Traxcavator	$46.69	7B	4W	9A
Grant	Power Equipment Operators	Dozer / Tractors (d-6 & Equivalent & Over)	$47.29	7B	4W	9A
Grant	Power Equipment Operators	Dozer, 834 R/t & Similar	$47.29	7B	4W	9A
Grant	Power Equipment Operators	Drill Doctor	$47.29	7B	4W	9A
Grant	Power Equipment Operators	Driller Licensed	$48.66	7B	4W	9A
Grant	Power Equipment Operators	Drillers Helper	$45.76	7B	4W	9A
Grant	Power Equipment Operators	Drilling Equipment (8 inch Bit & Over - Robbins, Reverse Circulation & Similar)	$47.01	7B	4W	9A
Grant	Power Equipment Operators	Drilling Equipment (8" Bit & Over - Robbins, Reverse Circulation & Similar)	$47.01	7B	4W	9A
Grant	Power Equipment Operators		$47.01	7B	4W	9A

INFORMATIONAL COPY ONLY - NOT FOR BIDDING PURPOSES

		Drilling Equipment (8" Bit & Over) (robbins, Reverse Circulation & Similar)				
Grant	Power Equipment Operators	Drills (churn, Core, Calyx Or Diamond)	$46.85	7B	4W	9A
Grant	Power Equipment Operators	Elevating Belt (holland Type)	$47.56	7B	4W	9A
Grant	Power Equipment Operators	Elevating Belt-type Loader (euclid, Barber Green & Similar)	$46.69	7B	4W	9A
Grant	Power Equipment Operators	Elevating Grader-type Loader (dumor, Adams Or Similar)	$46.69	7B	4W	9A
Grant	Power Equipment Operators	Elevator Hoisting Materials	$46.08	7B	4W	9A
Grant	Power Equipment Operators	Equipment Serviceman, Greaser & Oiler	$46.85	7B	4W	9A
Grant	Power Equipment Operators	Fireman & Heater Tender	$45.76	7B	4W	9A
Grant	Power Equipment Operators	Fork Lift Or Lumber Stacker, Hydra-life & Similar	$46.08	7B	4W	9A
Grant	Power Equipment Operators	Generator Plant Engineers (diesel Or Electric)	$46.69	7B	4W	9A
Grant	Power Equipment Operators	Gin Trucks (pipeline)	$46.08	7B	4W	9A
Grant	Power Equipment Operators	Grade Checker	$47.01	7B	4W	9A
Grant	Power Equipment Operators	Gunite Combination Mixer & Compressor	$46.69	7B	4W	9A
Grant	Power Equipment Operators	H.d. Mechanic	$47.56	7B	4W	9A
Grant	Power Equipment Operators	H.d. Welder	$47.56	7B	4W	9A
Grant	Power Equipment Operators	Heavy Equipment Robotics Operator	$47.56	7B	4W	9A
Grant	Power Equipment Operators	Helicopter Pilot	$48.66	7B	4W	9A
Grant	Power Equipment Operators	Helper, Mechanic Or Welder, H.D	$45.76	7B	4W	9A
Grant	Power Equipment Operators	Hoe Ram	$47.01	7B	4W	9A
Grant	Power Equipment Operators	Hoist (2 Or More Drums Or Tower Hoist)	$46.85	7B	4W	9A
Grant	Power Equipment Operators	Hoist, Single Drum	$46.08	7B	4W	9A
Grant	Power Equipment Operators	Hydraulic Platform Trailers (goldhofer, Shaurerly And Similar)	$47.56	7B	4W	9A
Grant	Power Equipment Operators	Hydro-seeder, Mulcher, Nozzleman	$45.76	7B	4W	9A
Grant	Power Equipment Operators	Lime Batch Tank Operator (recycle Train)	$47.29	7B	4W	9A
Grant	Power Equipment Operators	Lime Brain Operator (recycle Train)	$47.29	7B	4W	9A
Grant	Power Equipment Operators	Loader (360 Degrees Revolving Koehring Scooper Or Similar)	$47.56	7B	4W	9A

INFORMATIONAL COPY ONLY - NOT FOR BIDDING PURPOSES

Grant	Power Equipment Operators	Loader Operator (front-end & Overhead, 4 Yds. Incl. 8 Yds.)	$47.29	7B	4W	9A
Grant	Power Equipment Operators	Loaders (bucket Elevators And Conveyors)	$46.08	7B	4W	9A
Grant	Power Equipment Operators	Loaders (overhead & Front-end, Over 8 Yds. To 10 Yds.)	$47.56	7B	4W	9A
Grant	Power Equipment Operators	Loaders (overhead & Front-end, Under 4 Yds.. R/t)	$46.85	7B	4W	9A
Grant	Power Equipment Operators	Loaders (overhead And Front-end, 10 Yds. & Over)	$48.66	7B	4W	9A
Grant	Power Equipment Operators	Locomotive Engineer	$46.69	7B	4W	9A
Grant	Power Equipment Operators	Longitudinal Float	$46.08	7B	4W	9A
Grant	Power Equipment Operators	Master Environmental Maintenance Technician	$47.56	7B	4W	9A
Grant	Power Equipment Operators	Mixer (portable - Concrete)	$46.08	7B	4W	9A
Grant	Power Equipment Operators	Mixermobile	$46.69	7B	4W	9A
Grant	Power Equipment Operators	Mobile Crusher Operator (recycle Train)	$47.29	7B	4W	9A
Grant	Power Equipment Operators	Mucking Machine	$46.69	7B	4W	9A
Grant	Power Equipment Operators	Multiple Dozer Units With Single Blade	$47.29	7B	4W	9A
Grant	Power Equipment Operators	Pavement Breaker, Hydra-hammer & Similar	$46.08	7B	4W	9A
Grant	Power Equipment Operators	Paving (dual Drum)	$47.01	7B	4W	9A
Grant	Power Equipment Operators	Paving Machine (asphalt And Concrete)	$47.29	7B	4W	9A
Grant	Power Equipment Operators	Piledriving Engineers	$47.01	7B	4W	9A
Grant	Power Equipment Operators	Plant Oiler	$45.76	7B	4W	9A
Grant	Power Equipment Operators	Posthole Auger Or Punch	$46.69	7B	4W	9A
Grant	Power Equipment Operators	Power Broom	$46.08	7B	4W	9A
Grant	Power Equipment Operators	Pump (grout Or Jet)	$46.69	7B	4W	9A
Grant	Power Equipment Operators	Pumpman	$45.76	7B	4W	9A
Grant	Power Equipment Operators	Quad-track Or Similar Equipment	$47.29	7B	4W	9A
Grant	Power Equipment Operators	Railroad Ballast Regulation Operator (self-propelled)	$46.08	7B	4W	9A
Grant	Power Equipment Operators	Railroad Power Tamper Operator (self-propelled)	$46.08	7B	4W	9A
Grant	Power Equipment Operators	Railroad Tamper Jack Operator (self-propelled)	$46.08	7B	4W	9A
Grant	Power Equipment Operators	Railroad Track Liner Operator (self-propelled)	$47.01	7B	4W	9A
Grant	Power Equipment Operators		$47.01	7B	4W	9A

INFORMATIONAL COPY ONLY - NOT FOR BIDDING PURPOSES

		Refrigeration Plant Engineer (1000 Tons & Over)				
Grant	Power Equipment Operators	Refrigeration Plant Engineer (under 1000 Ton)	$46.85	7B	4W	9A
Grant	Power Equipment Operators	Rollerman (finishing Asphalt Pavement)	$47.29	7B	4W	9A
Grant	Power Equipment Operators	Rollers, All Types On Subgrade, Including Seal And Chip Coating (farm Type, Case, John Deere And Similar,or Compacting Vibrator), Except When Pulled B	$45.76	7B	4W	9A
Grant	Power Equipment Operators	Roto Mill (pavement Grinder)	$47.29	7B	4W	9A
Grant	Power Equipment Operators	Rotomill Groundsman	$46.85	7B	4W	9A
Grant	Power Equipment Operators	Rubber-tired Scrapers (multiple Engine With Three Or More Scrapers)	$47.56	7B	4W	9A
Grant	Power Equipment Operators	Rubber-tired Skidders (r/t With Or Without Attachments)	$46.85	7B	4W	9A
Grant	Power Equipment Operators	Scrapers, All, Rubber-tired	$47.29	7B	4W	9A
Grant	Power Equipment Operators	Screed Operator	$47.29	7B	4W	9A
Grant	Power Equipment Operators	Shovels (3 Yds. & Over)	$47.56	7B	4W	9A
Grant	Power Equipment Operators	Shovels (under 3 Yds.)	$47.29	7B	4W	9A
Grant	Power Equipment Operators	Signalman (whirleys, Highline, Hammerheads Or Similar)	$47.01	7B	4W	9A
Grant	Power Equipment Operators	Soil Stabilizer (p & H Or Similar)	$46.69	7B	4W	9A
Grant	Power Equipment Operators	Spray Curing Machine (concrete)	$46.08	7B	4W	9A
Grant	Power Equipment Operators	Spreader Box (self-propelled)	$46.08	7B	4W	9A
Grant	Power Equipment Operators	Spreader Machine	$46.69	7B	4W	9A
Grant	Power Equipment Operators	Steam Cleaner	$45.76	7B	4W	9A
Grant	Power Equipment Operators	Straddle Buggy (ross & Similar On Construction Job Only)	$46.08	7B	4W	9A
Grant	Power Equipment Operators	Surface Heater & Planer Machine	$46.85	7B	4W	9A
Grant	Power Equipment Operators	Tractor (farm Type R/t With Attachments, Except Backhoe)	$46.08	7B	4W	9A
Grant	Power Equipment Operators	Traverse Finish Machine	$46.69	7B	4W	9A
Grant	Power Equipment Operators	Trenching Machines (7 Ft. Depth & Over)	$47.29	7B	4W	9A
Grant	Power Equipment Operators		$46.85	7B	4W	9A

INFORMATIONAL COPY ONLY - NOT FOR BIDDING PURPOSES

		Trenching Machines (under 7 Ft. Depth Capacity)				
Grant	Power Equipment Operators	Tug Boat Operator	$47.29	7B	4W	9A
Grant	Power Equipment Operators	Tugger Operator	$46.08	7B	4W	9A
Grant	Power Equipment Operators	Turnhead (with Re-screening)	$46.85	7B	4W	9A
Grant	Power Equipment Operators	Turnhead Operator	$46.69	7B	4W	9A
Grant	Power Equipment Operators	Ultra High Pressure Wateriet Cutting Tool System Operator, (30,000 Psi)	$47.56	7B	4W	9A
Grant	Power Equipment Operators	Vactor Guzzler, Super Sucker	$47.29	7B	4W	9A
Grant	Power Equipment Operators	Vacuum Blasting Machine Operator	$47.56	7B	4W	9A
Grant	Power Equipment Operators	Vacuum Drill (reverse Circulation Drill Under 8" Bit)	$46.85	7B	4W	9A
Grant	Power Equipment Operators	Welding Machine	$45.76	7B	4W	9A
Grant	Power Equipment Operators	Whirleys & Hammerheads, All	$47.56	7B	4W	9A
Grant	Power Equipment Operators- Underground Sewer & Water	A-frame Truck (2 Or More Drums)	$46.69	7B	4W	9A
Grant	Power Equipment Operators- Underground Sewer & Water	A-frame Truck (single Drum)	$46.08	7B	4W	9A
Grant	Power Equipment Operators- Underground Sewer & Water	Asphalt Plant Operator	$47.29	7B	4W	9A
Grant	Power Equipment Operators- Underground Sewer & Water	Assistant Plant Operator, Fireman Or Pugmixer (asphalt)	$46.08	7B	4W	9A
Grant	Power Equipment Operators- Underground Sewer & Water	Assistant Refrigeration Plant & Chiller Operator (over 1000 Ton)	$46.69	7B	4W	9A
Grant	Power Equipment Operators- Underground Sewer & Water	Assistant Refrigeration Plant (under 1000 Ton)	$46.08	7B	4W	9A
Grant	Power Equipment Operators- Underground Sewer & Water	Automatic Subgrader (ditches & Trimmers)	$47.29	7B	4W	9A
Grant	Power Equipment Operators- Underground Sewer & Water	Backfillers (cleveland & Similar)	$46.69	7B	4W	9A
Grant	Power Equipment Operators- Underground Sewer & Water	Backhoe & Hoe Ram (under 3/4 Yd.)	$47.01	7B	4W	9A
Grant	Power Equipment Operators- Underground Sewer & Water	Backhoe (45,000 Gw & Under)	$47.01	7B	4W	9A

INFORMATIONAL COPY ONLY - NOT FOR BIDDING PURPOSES

Grant	Power Equipment Operators- Underground Sewer & Water	Backhoe (45,000 Gw To 110,000 Gw)	$47.29	7B	4W	9A
Grant	Power Equipment Operators- Underground Sewer & Water	Backhoe (over 110,000 Gw)	$47.56	7B	4W	9A
Grant	Power Equipment Operators- Underground Sewer & Water	Backhoes & Hoe Ram (3 Yds & Over)	$47.56	7B	4W	9A
Grant	Power Equipment Operators- Underground Sewer & Water	Backhoes & Hoe Ram (3/4 Yd. To 3 Yd.)	$47.29	7B	4W	9A
Grant	Power Equipment Operators- Underground Sewer & Water	Bagley Or Stationary Scraper	$46.08	7B	4W	9A
Grant	Power Equipment Operators- Underground Sewer & Water	Batch & Wet Mix Operator (multiple Units, 2 & Incl. 4)	$47.29	7B	4W	9A
Grant	Power Equipment Operators- Underground Sewer & Water	Batch Plant & Wet Mix Operator, Single Unit (concrete)	$46.69	7B	4W	9A
Grant	Power Equipment Operators- Underground Sewer & Water	Batch Plant (over 4 Units)	$47.29	7B	4W	9A
Grant	Power Equipment Operators- Underground Sewer & Water	Belt Finishing Machine	$46.08	7B	4W	9A
Grant	Power Equipment Operators- Underground Sewer & Water	Belt Loader (kocal Or Similar)	$46.69	7B	4W	9A
Grant	Power Equipment Operators- Underground Sewer & Water	Belt-crete Conveyors With Power Pack Or Similar	$46.69	7B	4W	9A
Grant	Power Equipment Operators- Underground Sewer & Water	Bending Machine	$46.69	7B	4W	9A
Grant	Power Equipment Operators- Underground Sewer & Water	Bit Grinders	$45.76	7B	4W	9A
Grant	Power Equipment Operators- Underground Sewer & Water	Blade (finish & Bluetop), Automatic, Cmi, Abc, Finish Athey & Huber & Similar When Used As Automatic	$47.56	7B	4W	9A
Grant	Power Equipment Operators- Underground Sewer & Water	Blade Operator (motor Patrol & Attachments)	$47.29	7B	4W	9A
Grant	Power Equipment Operators- Underground Sewer & Water	Blower Operator (cement)	$46.08	7B	4W	9A
Grant	Power Equipment Operators- Underground Sewer & Water	Boat Operator	$45.76	7B	4W	9A

INFORMATIONAL COPY ONLY - NOT FOR BIDDING PURPOSES

Grant	Power Equipment Operators- Underground Sewer & Water	Bob Cat (skid Steer)	$46.69	7B	4W	9A
Grant	Power Equipment Operators- Underground Sewer & Water	Bolt Threading Machine	$45.76	7B	4W	9A
Grant	Power Equipment Operators- Underground Sewer & Water	Boom Cats (side)	$47.29	7B	4W	9A
Grant	Power Equipment Operators- Underground Sewer & Water	Boring Machine (earth)	$46.69	7B	4W	9A
Grant	Power Equipment Operators- Underground Sewer & Water	Boring Machine (Rock Under 8 inch Bit - Quarry Master, Joy Or Similar)	$46.69	7B	4W	9A
Grant	Power Equipment Operators- Underground Sewer & Water	Boring Machine (Rock Under 8" Bit - Quarry Master, Joy Or Similar)	$46.69	7B	4W	9A
Grant	Power Equipment Operators- Underground Sewer & Water	Boring Machine (rock Under 8" Bit) (quarry Master, Joy Or Similar)	$46.69	7B	4W	9A
Grant	Power Equipment Operators- Underground Sewer & Water	Bump Cutter (wayne, Saginau Or Similar)	$46.69	7B	4W	9A
Grant	Power Equipment Operators- Underground Sewer & Water	Cableway Controller (dispatcher)	$47.29	7B	4W	9A
Grant	Power Equipment Operators- Underground Sewer & Water	Cableway Operators	$47.56	7B	4W	9A
Grant	Power Equipment Operators- Underground Sewer & Water	Canal Lining Machine (concrete)	$46.69	7B	4W	9A
Grant	Power Equipment Operators- Underground Sewer & Water	Carrydeck & Boom Truck (under 25 Tons)	$47.01	7B	4W	9A
Grant	Power Equipment Operators- Underground Sewer & Water	Cement Hog	$46.08	7B	4W	9A
Grant	Power Equipment Operators- Underground Sewer & Water	Chipper (without Crane) Cleaning & Doping Machine (pipeline)	$46.69	7B	4W	9A
Grant	Power Equipment Operators- Underground Sewer & Water	Clamshell, Dragline	$48.66	7B	4W	9A
Grant	Power Equipment Operators- Underground Sewer & Water	Compactor (self-propelled With Blade)	$47.29	7B	4W	9A
Grant	Power Equipment Operators- Underground Sewer & Water	Compressor (2000 Cfm Or Over, 2 Or More, Gas Diesel Or Electric Power)	$46.08	7B	4W	9A
Grant			$45.76	7B	4W	9A

INFORMATIONAL COPY ONLY - NOT FOR BIDDING PURPOSES

	Power Equipment Operators- Underground Sewer & Water	Compressors (under 2000 Cfm, Gas, Diesel Or Electric Power)				
Grant	Power Equipment Operators- Underground Sewer & Water	Concrete Cleaning / Decontamination Machine Operator	$47.56	7B	4W	9A
Grant	Power Equipment Operators- Underground Sewer & Water	Concrete Pump Boon Truck	$47.29	7B	4W	9A
Grant	Power Equipment Operators- Underground Sewer & Water	Concrete Pumps (squeeze-crete, Flow-crete, Whitman & Similar)	$46.85	7B	4W	9A
Grant	Power Equipment Operators- Underground Sewer & Water	Concrete Saw (multiple Cut)	$46.08	7B	4W	9A
Grant	Power Equipment Operators- Underground Sewer & Water	Concrete Slip Form Paver	$47.29	7B	4W	9A
Grant	Power Equipment Operators- Underground Sewer & Water	Conveyor Aggregate Delivery Systems (c.a.d.)	$47.29	7B	4W	9A
Grant	Power Equipment Operators- Underground Sewer & Water	Crane Oiler- Driver (cdl Required) & Cable Tender, Mucking Machine	$45.76	7B	4W	9A
Grant	Power Equipment Operators- Underground Sewer & Water	Cranes (100 to 299 Tons) And All Climbing, Overhead, Rail & Tower. All Attachments Incl.	$49.16	7B	4W	9A
Grant	Power Equipment Operators- Underground Sewer & Water	Cranes (25 Tons & Under), All Attachments Incl. Clamshell, Dragline	$47.01	7B	4W	9A
Grant	Power Equipment Operators- Underground Sewer & Water	Cranes (25 Tons To And Including 45 Tons), All Attachments Incl. Clamshell, Dragline	$47.29	7B	4W	9A
Grant	Power Equipment Operators- Underground Sewer & Water	Cranes (300 Tons and Over) And All Climbing, Overhead, Rail & Tower. All Attachments Incl.	$49.66	7B	4W	9A
Grant	Power Equipment Operators- Underground Sewer & Water	Cranes (45 Tons To 85 Tons), All Attachments Incl. Clamshell And Dragline	$47.56	7B	4W	9A
Grant	Power Equipment Operators- Underground Sewer & Water	Cranes (86 to 99 Tons) And All Climbing, Overhead, Rail & Tower. All Attachments Incl.	$48.66	7B	4W	9A
Grant	Power Equipment Operators- Underground Sewer & Water	Crusher Feeder	$45.76	7B	4W	9A
Grant	Power Equipment Operators- Underground Sewer & Water	Crusher, Grizzle & Screening Plant Operator	$47.29	7B	4W	9A

INFORMATIONAL COPY ONLY - NOT FOR BIDDING PURPOSES

Grant	Power Equipment Operators- Underground Sewer & Water	Curb Extruder (asphalt Or Concrete)	$46.85	7B	4W	9A
Grant	Power Equipment Operators- Underground Sewer & Water	Deck Engineer	$46.69	7B	4W	9A
Grant	Power Equipment Operators- Underground Sewer & Water	Deck Hand	$45.76	7B	4W	9A
Grant	Power Equipment Operators- Underground Sewer & Water	Derricks & Stifflegs (65 Tons & Over)	$47.56	7B	4W	9A
Grant	Power Equipment Operators- Underground Sewer & Water	Derricks & Stifflegs (under 65 Tons)	$47.01	7B	4W	9A
Grant	Power Equipment Operators- Underground Sewer & Water	Distributor Leverman	$46.08	7B	4W	9A
Grant	Power Equipment Operators- Underground Sewer & Water	Ditch Witch Or Similar	$46.08	7B	4W	9A
Grant	Power Equipment Operators- Underground Sewer & Water	Dope Pots (power Agitated	$46.08	7B	4W	9A
Grant	Power Equipment Operators- Underground Sewer & Water	Dozer / Tractor (up To D-6 Or Equivalent) And Traxcavator	$46.69	7B	4W	9A
Grant	Power Equipment Operators- Underground Sewer & Water	Dozer / Tractors (d-6 & Equivalent & Over)	$47.29	7B	4W	9A
Grant	Power Equipment Operators- Underground Sewer & Water	Dozer, 834 R/t & Similar	$47.29	7B	4W	9A
Grant	Power Equipment Operators- Underground Sewer & Water	Drill Doctor	$47.29	7B	4W	9A
Grant	Power Equipment Operators- Underground Sewer & Water	Driller Licensed	$48.66	7B	4W	9A
Grant	Power Equipment Operators- Underground Sewer & Water	Drillers Helper	$45.76	7B	4W	9A
Grant	Power Equipment Operators- Underground Sewer & Water	Drilling Equipment (8 inch Bit & Over - Robbins, Reverse Circulation & Similar)	$47.01	7B	4W	9A
Grant	Power Equipment Operators- Underground Sewer & Water	Drilling Equipment (8" Bit & Over - Robbins, Reverse Circulation & Similar)	$47.01	7B	4W	9A
Grant	Power Equipment Operators- Underground Sewer & Water	Drilling Equipment (8" Bit & Over) (robbins, Reverse Circulation & Similar)	$47.01	7B	4W	9A

INFORMATIONAL COPY ONLY - NOT FOR BIDDING PURPOSES

Grant	Power Equipment Operators- Underground Sewer & Water	Drills (churn, Core, Calyx Or Diamond)	$46.85	7B	4W	9A
Grant	Power Equipment Operators- Underground Sewer & Water	Elevating Belt (holland Type)	$47.56	7B	4W	9A
Grant	Power Equipment Operators- Underground Sewer & Water	Elevating Belt-type Loader (euclid, Barber Green & Similar)	$46.69	7B	4W	9A
Grant	Power Equipment Operators- Underground Sewer & Water	Elevating Grader-type Loader (dumor, Adams Or Similar)	$46.69	7B	4W	9A
Grant	Power Equipment Operators- Underground Sewer & Water	Elevator Hoisting Materials	$46.08	7B	4W	9A
Grant	Power Equipment Operators- Underground Sewer & Water	Equipment Serviceman, Greaser & Oiler	$46.85	7B	4W	9A
Grant	Power Equipment Operators- Underground Sewer & Water	Fireman & Heater Tender	$45.76	7B	4W	9A
Grant	Power Equipment Operators- Underground Sewer & Water	Fork Lift Or Lumber Stacker, Hydra-life & Similar	$46.08	7B	4W	9A
Grant	Power Equipment Operators- Underground Sewer & Water	Generator Plant Engineers (diesel Or Electric)	$46.69	7B	4W	9A
Grant	Power Equipment Operators- Underground Sewer & Water	Gin Trucks (pipeline)	$46.08	7B	4W	9A
Grant	Power Equipment Operators- Underground Sewer & Water	Grade Checker	$47.01	7B	4W	9A
Grant	Power Equipment Operators- Underground Sewer & Water	Gunite Combination Mixer & Compressor	$46.69	7B	4W	9A
Grant	Power Equipment Operators- Underground Sewer & Water	H.d. Mechanic	$47.56	7B	4W	9A
Grant	Power Equipment Operators- Underground Sewer & Water	H.d. Welder	$47.56	7B	4W	9A
Grant	Power Equipment Operators- Underground Sewer & Water	Heavy Equipment Robotics Operator	$47.56	7B	4W	9A
Grant	Power Equipment Operators- Underground Sewer & Water	Helicopter Pilot	$48.66	7B	4W	9A
Grant	Power Equipment Operators- Underground Sewer & Water	Helper, Mechanic Or Welder, H.D	$45.76	7B	4W	9A
Grant		Hoe Ram	$47.01	7B	4W	9A

INFORMATIONAL COPY ONLY - NOT FOR BIDDING PURPOSES

	Power Equipment Operators- Underground Sewer & Water					
Grant	Power Equipment Operators- Underground Sewer & Water	Hoist (2 Or More Drums Or Tower Hoist)	$46.85	7B	4W	9A
Grant	Power Equipment Operators- Underground Sewer & Water	Hoist, Single Drum	$46.08	7B	4W	9A
Grant	Power Equipment Operators- Underground Sewer & Water	Hydraulic Platform Trailers (goldhofer, Shaurerly And Similar)	$47.56	7B	4W	9A
Grant	Power Equipment Operators- Underground Sewer & Water	Hydro-seeder, Mulcher, Nozzleman	$45.76	7B	4W	9A
Grant	Power Equipment Operators- Underground Sewer & Water	Lime Batch Tank Operator (recycle Train)	$47.29	7B	4W	9A
Grant	Power Equipment Operators- Underground Sewer & Water	Lime Brain Operator (recycle Train)	$47.29	7B	4W	9A
Grant	Power Equipment Operators- Underground Sewer & Water	Loader (360 Degrees Revolving Koehring Scooper Or Similar)	$47.56	7B	4W	9A
Grant	Power Equipment Operators- Underground Sewer & Water	Loader Operator (front-end & Overhead, 4 Yds. Incl. 8 Yds.)	$47.29	7B	4W	9A
Grant	Power Equipment Operators- Underground Sewer & Water	Loaders (bucket Elevators And Conveyors)	$46.08	7B	4W	9A
Grant	Power Equipment Operators- Underground Sewer & Water	Loaders (overhead & Front-end, Over 8 Yds. To 10 Yds.)	$47.56	7B	4W	9A
Grant	Power Equipment Operators- Underground Sewer & Water	Loaders (overhead & Front-end, Under 4 Yds.. R/t)	$46.85	7B	4W	9A
Grant	Power Equipment Operators- Underground Sewer & Water	Loaders (overhead And Front-end, 10 Yds. & Over)	$48.66	7B	4W	9A
Grant	Power Equipment Operators- Underground Sewer & Water	Locomotive Engineer	$46.69	7B	4W	9A
Grant	Power Equipment Operators- Underground Sewer & Water	Longitudinal Float	$46.08	7B	4W	9A
Grant	Power Equipment Operators- Underground Sewer & Water	Master Environmental Maintenance Technician	$47.56	7B	4W	9A
Grant	Power Equipment Operators- Underground Sewer & Water	Mixer (portable - Concrete)	$46.08	7B	4W	9A
Grant		Mixermobile	$46.69	7B	4W	9A

INFORMATIONAL COPY ONLY - NOT FOR BIDDING PURPOSES

	Power Equipment Operators- Underground Sewer & Water					
Grant	Power Equipment Operators- Underground Sewer & Water	Mobile Crusher Operator (recycle Train)	$47.29	7B	4W	9A
Grant	Power Equipment Operators- Underground Sewer & Water	Mucking Machine	$46.69	7B	4W	9A
Grant	Power Equipment Operators- Underground Sewer & Water	Multiple Dozer Units With Single Blade	$47.29	7B	4W	9A
Grant	Power Equipment Operators- Underground Sewer & Water	Pavement Breaker, Hydra-hammer & Similar	$46.08	7B	4W	9A
Grant	Power Equipment Operators- Underground Sewer & Water	Paving (dual Drum)	$47.01	7B	4W	9A
Grant	Power Equipment Operators- Underground Sewer & Water	Paving Machine (asphalt And Concrete)	$47.29	7B	4W	9A
Grant	Power Equipment Operators- Underground Sewer & Water	Piledriving Engineers	$47.01	7B	4W	9A
Grant	Power Equipment Operators- Underground Sewer & Water	Plant Oiler	$45.76	7B	4W	9A
Grant	Power Equipment Operators- Underground Sewer & Water	Posthole Auger Or Punch	$46.69	7B	4W	9A
Grant	Power Equipment Operators- Underground Sewer & Water	Power Broom	$46.08	7B	4W	9A
Grant	Power Equipment Operators- Underground Sewer & Water	Pump (grout Or Jet)	$46.69	7B	4W	9A
Grant	Power Equipment Operators- Underground Sewer & Water	Pumpman	$45.76	7B	4W	9A
Grant	Power Equipment Operators- Underground Sewer & Water	Quad-track Or Similar Equipment	$47.29	7B	4W	9A
Grant	Power Equipment Operators- Underground Sewer & Water	Railroad Ballast Regulation Operator (self-propelled)	$46.08	7B	4W	9A
Grant	Power Equipment Operators- Underground Sewer & Water	Railroad Power Tamper Operator (self-propelled)	$46.08	7B	4W	9A
Grant	Power Equipment Operators- Underground Sewer & Water	Railroad Tamper Jack Operator (self-propelled)	$46.08	7B	4W	9A
Grant		Railroad Track Liner Operator (self-propelled)	$47.01	7B	4W	9A

INFORMATIONAL COPY ONLY - NOT FOR BIDDING PURPOSES

	Power Equipment Operators- Underground Sewer & Water					
Grant	Power Equipment Operators- Underground Sewer & Water	Refrigeration Plant Engineer (1000 Tons & Over)	$47.01	7B	4W	9A
Grant	Power Equipment Operators- Underground Sewer & Water	Refrigeration Plant Engineer (under 1000 Ton)	$46.85	7B	4W	9A
Grant	Power Equipment Operators- Underground Sewer & Water	Rollerman (finishing Asphalt Pavement)	$47.29	7B	4W	9A
Grant	Power Equipment Operators- Underground Sewer & Water	Rollers, All Types On Subgrade, Including Seal And Chip Coating (farm Type, Case, John Deere And Similar,or Compacting Vibrator), Except When Pulled B	$45.76	7B	4W	9A
Grant	Power Equipment Operators- Underground Sewer & Water	Roto Mill (pavement Grinder)	$47.29	7B	4W	9A
Grant	Power Equipment Operators- Underground Sewer & Water	Rotomill Groundsman	$46.85	7B	4W	9A
Grant	Power Equipment Operators- Underground Sewer & Water	Rubber-tired Scrapers (multiple Engine With Three Or More Scrapers)	$47.56	7B	4W	9A
Grant	Power Equipment Operators- Underground Sewer & Water	Rubber-tired Skidders (r/t With Or Without Attachments)	$46.85	7B	4W	9A
Grant	Power Equipment Operators- Underground Sewer & Water	Scrapers, All, Rubber-tired	$47.29	7B	4W	9A
Grant	Power Equipment Operators- Underground Sewer & Water	Screed Operator	$47.29	7B	4W	9A
Grant	Power Equipment Operators- Underground Sewer & Water	Shovels (3 Yds. & Over)	$47.56	7B	4W	9A
Grant	Power Equipment Operators- Underground Sewer & Water	Shovels (under 3 Yds.)	$47.29	7B	4W	9A
Grant	Power Equipment Operators- Underground Sewer & Water	Signalman (whirleys, Highline, Hammerheads Or Similar)	$47.01	7B	4W	9A
Grant	Power Equipment Operators- Underground Sewer & Water	Soil Stabilizer (p & H Or Similar)	$46.69	7B	4W	9A
Grant	Power Equipment Operators- Underground Sewer & Water	Spray Curing Machine (concrete)	$46.08	7B	4W	9A
Grant		Spreader Box (self-propelled)	$46.08	7B	4W	9A

INFORMATIONAL COPY ONLY - NOT FOR BIDDING PURPOSES

	Power Equipment Operators- Underground Sewer & Water					
Grant	Power Equipment Operators- Underground Sewer & Water	Spreader Machine	$46.69	7B	4W	9A
Grant	Power Equipment Operators- Underground Sewer & Water	Steam Cleaner	$45.76	7B	4W	9A
Grant	Power Equipment Operators- Underground Sewer & Water	Straddle Buggy (ross & Similar On Construction Job Only)	$46.08	7B	4W	9A
Grant	Power Equipment Operators- Underground Sewer & Water	Surface Heater & Planer Machine	$46.85	7B	4W	9A
Grant	Power Equipment Operators- Underground Sewer & Water	Tractor (farm Type R/t With Attachments, Except Backhoe)	$46.08	7B	4W	9A
Grant	Power Equipment Operators- Underground Sewer & Water	Traverse Finish Machine	$46.69	7B	4W	9A
Grant	Power Equipment Operators- Underground Sewer & Water	Trenching Machines (7 Ft. Depth & Over)	$47.29	7B	4W	9A
Grant	Power Equipment Operators- Underground Sewer & Water	Trenching Machines (under 7 Ft. Depth Capacity)	$46.85	7B	4W	9A
Grant	Power Equipment Operators- Underground Sewer & Water	Tug Boat Operator	$47.29	7B	4W	9A
Grant	Power Equipment Operators- Underground Sewer & Water	Tugger Operator	$46.08	7B	4W	9A
Grant	Power Equipment Operators- Underground Sewer & Water	Turnhead (with Re-screening)	$46.85	7B	4W	9A
Grant	Power Equipment Operators- Underground Sewer & Water	Turnhead Operator	$46.69	7B	4W	9A
Grant	Power Equipment Operators- Underground Sewer & Water	Ultra High Pressure Wateriet Cutting Tool System Operator, (30,000 Psi)	$47.56	7B	4W	9A
Grant	Power Equipment Operators- Underground Sewer & Water	Vactor Guzzler, Super Sucker	$47.29	7B	4W	9A
Grant	Power Equipment Operators- Underground Sewer & Water	Vacuum Blasting Machine Operator	$47.56	7B	4W	9A
Grant	Power Equipment Operators- Underground Sewer & Water	Vacuum Drill (reverse Circulation Drill Under 8" Bit)	$46.85	7B	4W	9A
Grant		Welding Machine	$45.76	7B	4W	9A

INFORMATIONAL COPY ONLY NOT FOR BIDDING PURPOSES

	Power Equipment Operators- Underground Sewer & Water					
Grant	Power Equipment Operators- Underground Sewer & Water	Whirleys & Hammerheads, All	$47.56	7B	4W	9A
Grant	Power Line Clearance Tree Trimmers	Journey Level In Charge	$53.10	5A	4A	
Grant	Power Line Clearance Tree Trimmers	Spray Person	$50.40	5A	4A	
Grant	Power Line Clearance Tree Trimmers	Tree Equipment Operator	$53.10	5A	4A	
Grant	Power Line Clearance Tree Trimmers	Tree Trimmer	$47.48	5A	4A	
Grant	Power Line Clearance Tree Trimmers	Tree Trimmer Groundperson	$36.10	5A	4A	
Grant	Refrigeration & Air Conditioning Mechanics	Journey Level	$82.94	6Z	1Q	
Grant	Residential Brick Mason	Journey Level	$50.44	5A	1M	
Grant	Residential Carpenters	Journey Level	$15.75		1	
Grant	Residential Cement Masons	Journey Level	$14.86		1	
Grant	Residential Drywall Applicators	Journey Level	$22.60		1	
Grant	Residential Drywall Tapers	Journey Level	$18.09		1	
Grant	Residential Electricians	Journey Level	$29.65		1	
Grant	Residential Glaziers	Journey Level	$17.83		1	
Grant	Residential Insulation Applicators	Journey Level	$14.86		1	
Grant	Residential Laborers	Journey Level	$13.50		1	
Grant	Residential Marble Setters	Journey Level	$50.44	5A	1M	
Grant	Residential Painters	Journey Level	$15.37		1	
Grant	Residential Plumbers & Pipefitters	Journey Level	$24.06		1	
Grant	Residential Refrigeration & Air Conditioning Mechanics	Journey Level	$24.06		1	
Grant	Residential Sheet Metal Workers	Journey Level	$34.27		1	
Grant	Residential Soft Floor Layers	Journey Level	$29.42		1	
Grant	Residential Sprinkler Fitters (Fire Protection)	Journey Level	$19.14		1	
Grant	Residential Stone Masons	Journey Level	$50.44	5A	1M	
Grant	Residential Terrazzo Workers	Journey Level	$14.86		1	
Grant	Residential Terrazzo/Tile Finishers	Journey Level	$21.96		1	
Grant	Residential Tile Setters	Journey Level	$14.86		1	
Grant	Roofers	Journey Level	$41.09	5I	1R	
Grant	Roofers	Using Irritable Bituminous Materials	$43.09	5I	1R	

INFORMATIONAL COPY ONLY - NOT FOR BIDDING PURPOSES

Grant	Sheet Metal Workers	Journey Level (Field or Shop)	$56.61	6Z	1B	
Grant	Sign Makers & Installers (Electrical)	Journey Level	$75.25	7F	1E	
Grant	Sign Makers & Installers (Non-Electrical)	Journey Level	$14.65		1	
Grant	Soft Floor Layers	Journey Level	$51.07	5A	3J	
Grant	Solar Controls For Windows	Journey Level	$13.50		1	
Grant	Sprinkler Fitters (Fire Protection)	Journey Level	$58.99	7J	1R	
Grant	Stage Rigging Mechanics (Non Structural)	Journey Level	$13.50		1	
Grant	Stone Masons	Journey Level	$50.44	5A	1M	
Grant	Street And Parking Lot Sweeper Workers	Journey Level	$14.00		1	
Grant	Surveyors	All Classifications	$28.57	0	1	
Grant	Telecommunication Technicians	Telecom Technician Journey Level	$45.23	5B	1B	
Grant	Telephone Line Construction - Outside	Cable Splicer	$41.81	5A	2B	
Grant	Telephone Line Construction - Outside	Hole Digger/Ground Person	$23.53	5A	2B	
Grant	Telephone Line Construction - Outside	Installer (Repairer)	$40.09	5A	2B	
Grant	Telephone Line Construction - Outside	Special Aparatus Installer I	$41.81	5A	2B	
Grant	Telephone Line Construction - Outside	Special Apparatus Installer II	$40.99	5A	2B	
Grant	Telephone Line Construction - Outside	Telephone Equipment Operator (Heavy)	$41.81	5A	2B	
Grant	Telephone Line Construction - Outside	Telephone Equipment Operator (Light)	$38.92	5A	2B	
Grant	Telephone Line Construction - Outside	Telephone Lineperson	$38.92	5A	2B	
Grant	Telephone Line Construction - Outside	Television Groundperson	$22.32	5A	2B	
Grant	Telephone Line Construction - Outside	Television Lineperson/Installer	$29.60	5A	2B	
Grant	Telephone Line Construction - Outside	Television System Technician	$35.20	5A	2B	
Grant	Telephone Line Construction - Outside	Television Technician	$31.67	5A	2B	
Grant	Telephone Line Construction - Outside	Tree Trimmer	$38.92	5A	2B	
Grant	Terrazzo Workers	Journey Level	$43.61	5A	1M	
Grant	Tile Setters	Journey Level	$43.61	5A	1M	
Grant	Tile, Marble & Terrazzo Finishers	Journey Level	$35.73	5A	1M	
Grant	Traffic Control Stripers	Journey Level	$47.68	7A	1K	
Grant	Truck Drivers	Asphalt Mix Over 20 Yards	$46.42	5D	1V	8M

INFORMATIONAL COPY ONLY - NOT FOR BIDDING PURPOSES

Grant	Truck Drivers	Asphalt Mix To 20 Yards	$46.05	5D	1V	8M
Grant	Truck Drivers	Dump Truck	$46.05	5D	1V	8M
Grant	Truck Drivers	Dump Truck & Trailer	$46.42	5D	1V	8M
Grant	Truck Drivers	Other Trucks	$45.94	5D	1V	8M
Grant	Truck Drivers - Ready Mix	Transit Mixers 20 yards and under	$46.42	5D	1V	8M
Grant	Truck Drivers - Ready Mix	Transit Mixers over 20 yards	$46.75	5D	1V	8M
Grant	Well Drillers & Irrigation Pump Installers	Irrigation Pump Installer	$13.61		1	
Grant	Well Drillers & Irrigation Pump Installers	Oiler	$13.50		1	
Grant	Well Drillers & Irrigation Pump Installers	Well Driller	$18.00		1	

INFORMATIONAL COPY ONLY - NOT FOR BIDDING PURPOSES

INFORMATIONAL COPY ONLY - NOT FOR BIDDING PURPOSES

APPENDIX C

Half-Sized Engineering Plans

EPHRATA LANDFILL
PHASE 3 DEVELOPMENT PROJECT

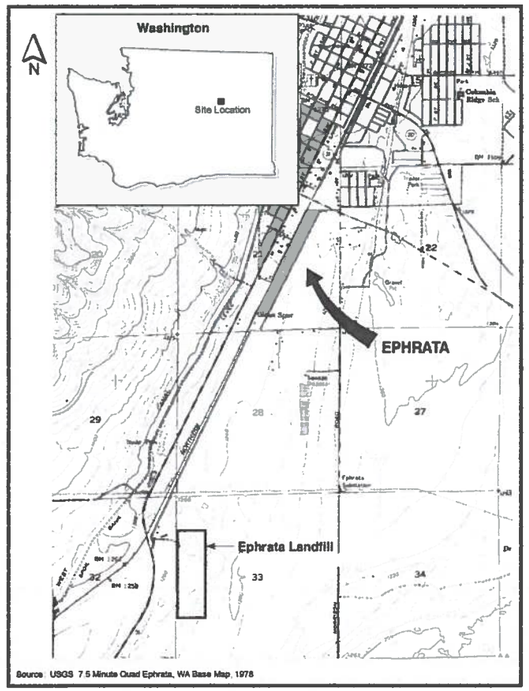

Source: USGS 7.5 Minute Quad Ephrata, WA Base Map, 1978

LOCATION MAP

0 1/2
SCALE IN MILES

OWNED AND OPERATED BY:
GRANT COUNTY PUBLIC WORKS DEPARTMENT

GRANT COUNTY PUBLIC WORKS DEPARTMENT
124 ENTERPRISE STREET SE
EPHRATA, WASHINGTON 98823-0037

COUNTY COMMISSIONERS:

DISTRICT 1 RICHARD STEVENS
DISTRICT 2 TOM TAYLOR
DISTRICT 3 CINDY CARTER

INDEX TO DRAWINGS

DWG NO.	SHT NO.	SHEET TITLE
1	C1	TITLE SHEET
2	C2	ABBREVIATIONS, LEGEND AND GENERAL NOTES
3	C3	PHASE 3 DEVELOPMENT GRADING PLAN
4	C4	LANDFILL SECTIONS, DETAILS AND CONTROL SCHEDULE
5	C5	LANDFILL SECTIONS AND DETAILS
6	C6	LANDFILL GAS PLAN AND ELECTRICAL CONDUITS – NORTHEAST
7	C7	LANDFILL GAS PLAN AND ELECTRICAL CONDUITS – SOUTHEAST
8	C8	LANDFILL GAS PLAN – SOUTHWEST
9	C9	LANDFILL GAS PLAN – NORTHWEST
10	C10	LANDFILL GAS SECTIONS AND DETAILS
11	C11	LANDFILL GAS SECTIONS AND DETAILS
12	C12	LANDFILL GAS SECTIONS AND DETAILS
13	C13	LANDFILL GAS SECTIONS AND DETAILS
14	C14	FLARE FACILITY PLAN
15	C15	FLARE FACILITY DETAILS
16	E1	ELECTRICAL FLARE FACILITY PLAN
17	E2	ELECTRICAL ONE-LINE DIAGRAM
18	E3	ELECTRICAL SCHEDULES
19	E4	ELECTRICAL DETAILS

INFORMATIONAL COPY ONLY - NOT FOR BIDDING PURPOSES

LAYOUT: C1 PATH: U:\PSO\Projects\Clients\3746-Grant Cnty\555-3746-001 Ephrata\99Svcs\CADD\Phase 05\Task 01 PH3 Development\DWG PLOTTED BY: purganbat DATE: Monday, April 27, 2020 10:08:56 AM

REVISIONS	DATE	BY

DESIGNED S. EMGE
DRAWN B.PURGANAN
CHECKED I. SUTTON
APPROVED S. EMGE

ONE INCH AT FULL SCALE. IF NOT, SCALE ACCORDINGLY
FILE NAME PS3746001P05T01-C1
JOB No. 555-3746-001 05/01
DATE FEBRUARY 2020

STEPHEN M. PRICE STATE OF WASHINGTON 54389 REGISTERED PROFESSIONAL ENGINEER 5/1/20

Parametrix
ENGINEERING . PLANNING . ENVIRONMENTAL SCIENCES
719 2ND AVENUE, SUITE 200 | SEATTLE, WA 98104
P 206.394.3700
WWW.PARAMETRIX.COM

PROJECT NAME
EPHRATA LANDFILL
PHASE 3 DEVELOPMENT
GRANT COUNTY PUBLIC WORKS
EPHRATA, WASHINGTON

TITLE SHEET

DRAWING NO.
1 OF 19
C1

LEGEND:

34C1 ●	WATER SUPPLY WELL LOCATION
(M)	EXISTING LYSIMETER MONITORING MANHOLE
GP-6	GAS PROBE
GE-1	VERTICAL LFG GAS WELL
MW-1	EXISTING GROUNDWATER MONITORING WELL LOCATION
WB-9	EXISTING OBSERVATION WELL
	SURFACE WATER DITCH
	EXISTING WATER LINE
	ELECTRICAL
	EXISTING FENCE
	PROPERTY BOUNDARY
	LIMIT OF GEOMEMBRANE (PLAN)
	GEOTEXTILE
	GEOMEMBRANE (SECTION)
—1200—	EXISTING CONTOUR
—1200—	PROPOSED SUBGRADE CONTOUR
	CONSTRUCTION PHASE LIMITS
	ROAD CENTERLINE
	LINER COVER SOIL TRANSITION
2%	GRADE OR SURFACE SLOPE
3:1	SLOPE DESIGNATION AND DIRECTION
1 4	SLOPE DESIGNATION (IN ELEVATION)
3	KEY NOTE NUMBER REFERENCE THAT CORRELATES NOTE CALLOUT TO NOTE THAT APPLIES
105	COORDINATE SCHEDULE POINT NUMBER
	CULVERT
	EXISTING SUBGRADE
	PREPARED SUBGRADE
	BEDDING LAYER
	CRUSHED SURFACING (SECTION)
	CRUSHED SURFACING (PLAN)
	CONCRETE
	EMBANKMENT
	ROCK ARMOR
	LEACHATE COLLECTION LAYER

LIST OF ABBREVIATIONS:

CC	CONDENSATE COLLECTION	SW	SOLID WALL
CCW	COUNTER CLOCKWISE	THD	THREADED
CLR	CLEAR	THK	THICK
CD	CONDENSATE DRAIN	TYP	TYPICAL
CPC	CORRUGATED POLYETHYLENE CULVERT	UV	ULTRA VIOLET
E	EAST	WB	EXISTING OBSERVATION WELL
EL	ELEVATION	&	AND
EW	EXISTING PILOT EXTRACTION WELL	℄	CENTERLINE
FLG	FLANGED	ø/DIA	DIAMETER
GB	GRADE BREAK	=	EQUALS
GP	EXISTING GAS PROBE	'	FEET
GW	GROUND WATER	"	INCHES
HDPE	HIGH DENSITY POLYETHYLENE		
IE	INVERT ELEVATION		
HP	HIGH POINT		
LCO	LEACHATE CLEANOUT PIPE		
LCP	LEACHATE COLLECTION PIPE		
LFG	LANDFILL GAS		
LP	LOW POINT		
MAX/MIN	MAXIMUM/MINIMUM		
MN	MONITORING WELL		
MW	EXISTING GROUNDWATER MONITORING WELL		
N	NORTH		
N.I.C.	NOT IN CONTRACT		
O.C.	ON-CENTER		
PERF	PERFORATED		
SDR	STANDARD DIMENSION RATIO		
SQ	SQUARE		
SS	STAINLESS STEEL		

GENERAL NOTES:

1. EXISTING CONTOURS OF LANDFILL AREA ARE BASED ON TOPOGRAPHIC SURVEY DATA SUPPLIED BY GRANT COUNTY PUBLIC WORKS, IN DECEMBER 2018.
2. THE NEW LANDFILL, WHICH IS SOUTH OF PROPOSED PHASE 3 DEVELOPMENT AREA, IS BEING ACTIVELY FILLED AND SOIL IS BEING REMOVED FROM THE BORROW AREA NORTH OF PHASE 3 DEVELOPMENT AREA.
3. ANY REFUSE ENCOUNTERED DURING CONSTRUCTION SHALL BE HAULED AND DISPOSED OF IN THE LANDFILL AND SHALL BE CONSIDERED EXCAVATION MATERIAL IN ACCORDANCE WITH THE SPECIFICATIONS, AND AS DIRECTED BY THE OWNER.

4 LANDFILL ACCESS ROAD FROM THE SCALEHOUSE TO THE ACTIVE LANDFILL AREA SHALL REMAIN OPEN AT ALL TIMES DURING NORMAL LANDFILL OPERATING HOURS IN ACCORDANCE WITH THE SPECIFICATIONS.

5 ACCESS FOR THE OWNER-SUPPLIED ROCK ARMOR STOCKPILE IS VIA THE GATE IN THE SOUTHEAST CORNER OF THE PROPERTY. USE EXISTING WEST AND SOUTH PERIMETER ROADS.

6 THE CUT/FILL QUANTITIES MAY VARY DUE TO SURVEY INFORMATION AND LANDFILL ACTIVITIES IN PHASE 4.

DETAIL AND SECTION DESIGNATION

1 / C4 — INDICATES DETAIL NUMBER; INDICATES DRAWING/SHEET WHERE DETAIL IS SHOWN

A / C5 — INDICATES SECTION LETTER; INDICATES DRAWING/SHEET WHERE SECTION IS SHOWN

2 / — STANDARD DETAIL OR SECTION APPEARS ON THE SAME DRAWING/SHEET

INDICATES DETAIL NUMBER — SUBTITLE DETAIL — SCALE — 1 / C4 — INDICATES DRAWING/SHEET WHERE DETAIL IS REFERRED TO

INDICATES SECTION LETTER — SUBTITLE SECTION — SCALE — A / C5 — INDICATES DRAWING/SHEET WHERE SECTION IS REFERRED TO

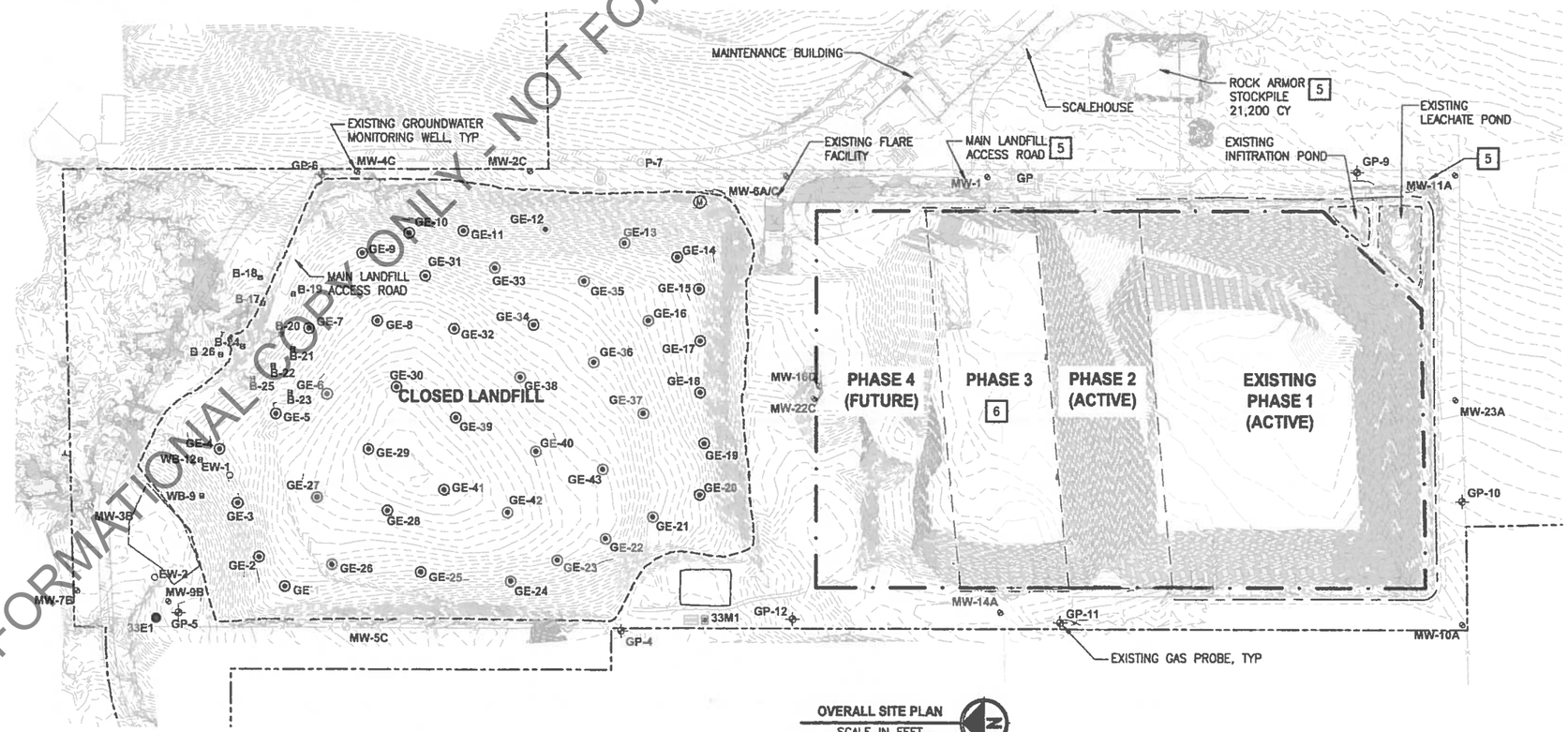

OVERALL SITE PLAN
SCALE IN FEET
0 200 400

INFORMATIONAL COPY ONLY - NOT FOR BIDDING PURPOSES

REVISIONS	DATE	BY

DESIGNED S. EMGE
DRAWN B. PURGANAN
CHECKED I. SUTTON
APPROVED S. EMGE

ONE INCH AT FULL SCALE. IF NOT, SCALE ACCORDINGLY
FILE NAME PS3746001P05T01-C2
JOB No. 555-3746-001 05/01
DATE FEBRUARY 2020

STEPHEN M. EMGE — STATE OF WASHINGTON — 45300 — REGISTERED PROFESSIONAL ENGINEER — 3/1/20

Parametrix
ENGINEERING . PLANNING . ENVIRONMENTAL SCIENCES
719 2ND AVENUE, SUITE 200 | SEATTLE, WA 98104
P 206.394.3700
WWW.PARAMETRIX.COM

PROJECT NAME
EPHRATA LANDFILL
PHASE 3 DEVELOPMENT
GRANT COUNTY PUBLIC WORKS
EPHRATA, WASHINGTON

ABBREVIATIONS, LEGEND AND GENERAL NOTES

DRAWING NO. 2 OF 19
C2

PATH: U:\PSO\Projects\Clients\3746-Grant Cnty\555-3746-001 Ephrata\995vca\CADD\Phase 05\Task 01 PH3 Development\DWG PLOTTED BY: purganbut DATE: Monday, April 27, 2020 10:09:53 AM
LAYOUT: C2

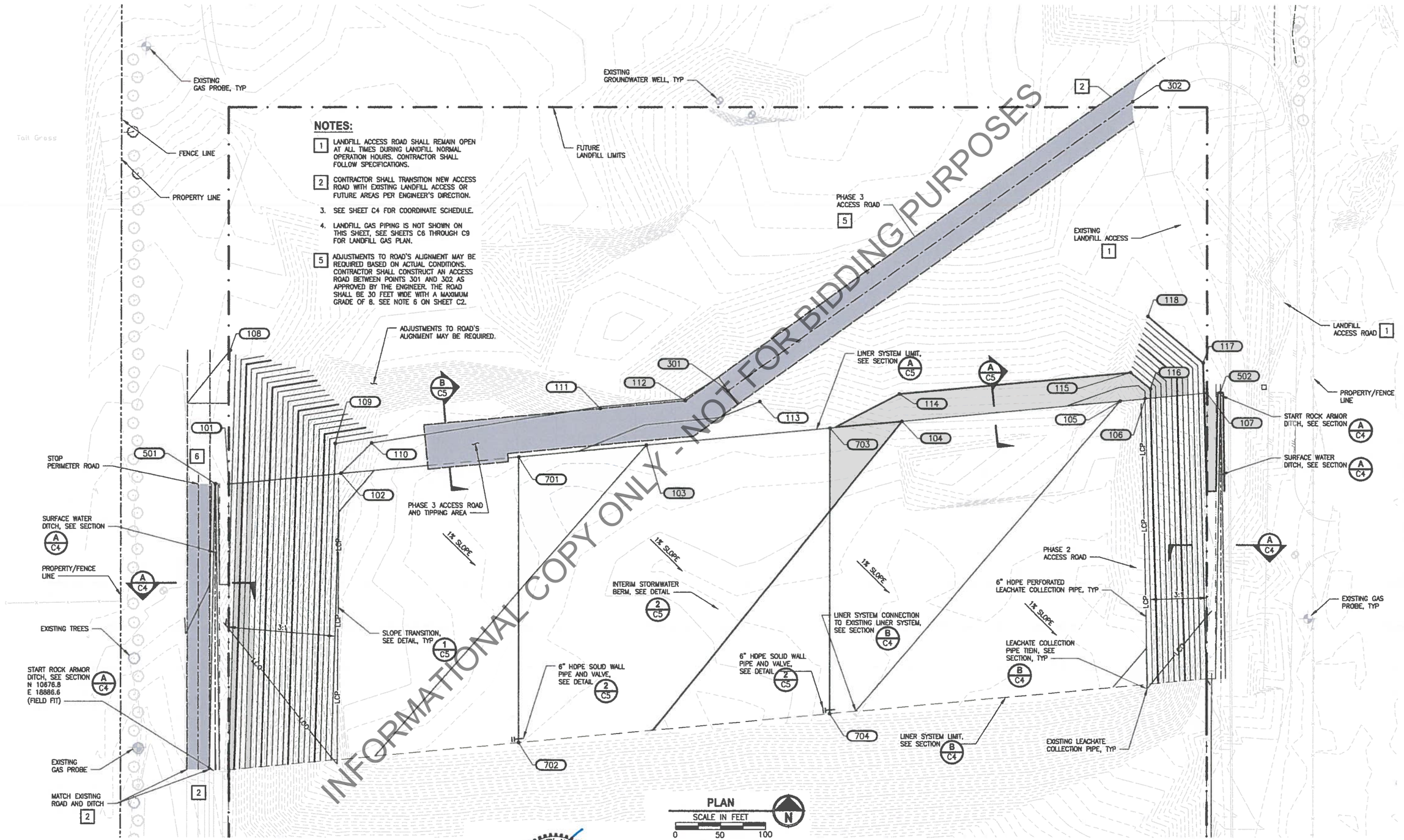

NOTES:

1. LANDFILL ACCESS ROAD SHALL REMAIN OPEN AT ALL TIMES DURING LANDFILL NORMAL OPERATION HOURS. CONTRACTOR SHALL FOLLOW SPECIFICATIONS.
2. CONTRACTOR SHALL TRANSITION NEW ACCESS ROAD WITH EXISTING LANDFILL ACCESS OR FUTURE AREAS PER ENGINEER'S DIRECTION.
3. SEE SHEET C4 FOR COORDINATE SCHEDULE.
4. LANDFILL GAS PIPING IS NOT SHOWN ON THIS SHEET, SEE SHEETS C6 THROUGH C9 FOR LANDFILL GAS PLAN.
5. ADJUSTMENTS TO ROAD'S ALIGNMENT MAY BE REQUIRED BASED ON ACTUAL CONDITIONS. CONTRACTOR SHALL CONSTRUCT AN ACCESS ROAD BETWEEN POINTS 301 AND 302 AS APPROVED BY THE ENGINEER. THE ROAD SHALL BE 30 FEET WIDE WITH A MAXIMUM GRADE OF 8. SEE NOTE 6 ON SHEET C2.

INFORMATIONAL COPY ONLY - NOT FOR BIDDING PURPOSES

REVISIONS	DATE	BY

DESIGNED S. EMGE
DRAWN B. PURGANAN
CHECKED I. SUTTON
APPROVED S. EMGE

ONE INCH AT FULL SCALE. IF NOT, SCALE ACCORDINGLY
FILE NAME PS3746001P05T01-C3
JOB No. 555-3746-001 05/01
DATE FEBRUARY 2020

STEPHEN M. EMGE, STATE OF WASHINGTON, 34389, REGISTERED PROFESSIONAL ENGINEER
5/1/20

Parametrix
ENGINEERING . PLANNING . ENVIRONMENTAL SCIENCES
719 2ND AVENUE, SUITE 200 | SEATTLE, WA 98104
P 206.394.3700
WWW.PARAMETRIX.COM

PROJECT NAME
EPHRATA LANDFILL
PHASE 3 DEVELOPMENT
GRANT COUNTY PUBLIC WORKS
EPHRATA, WASHINGTON

PHASE 3 DEVELOPMENT GRADING PLAN

DRAWING NO. 3 OF 19
C3

PATH: U:\PSO\Projects\Clients\3746-Grant Cnty\555-3746-001 Ephrata\99Svcs\CADD\Phase 05\Task 01 PH3 Development\DWG PLOTTED BY: purgabut DATE: Monday, April 27, 2020 10:10:28 AM
LAYOUT: C3

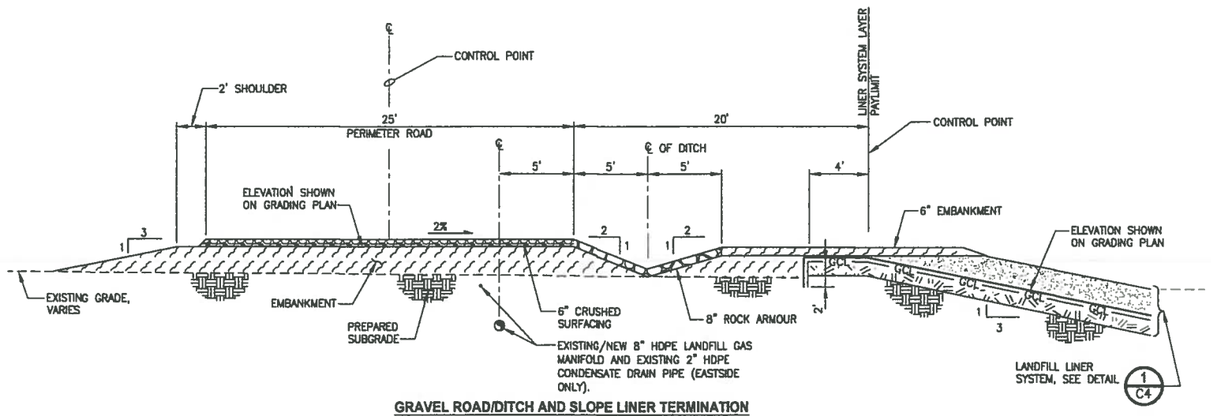

GRAVEL ROAD/DITCH AND SLOPE LINER TERMINATION

SECTION A/C3

SCALE: 1"=5'

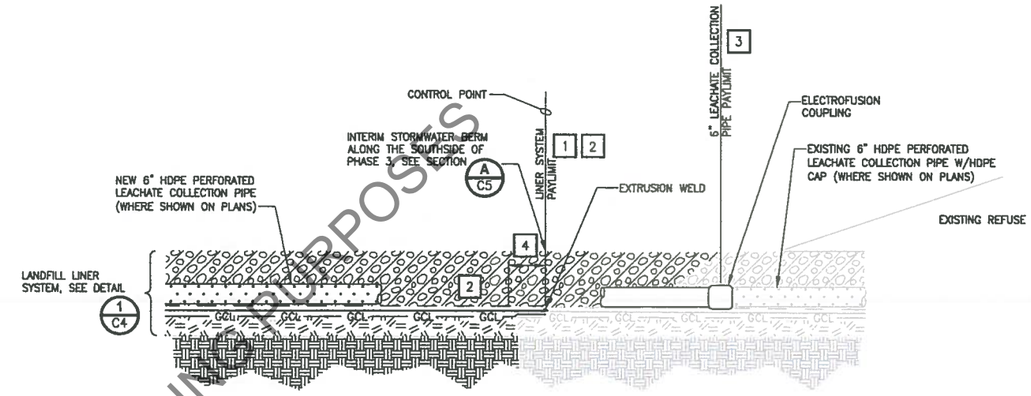

PHASE 2 AND 3 LINER CONNECTION

SECTION B/C3

NOT TO SCALE

NOTES:

1. EXISTING SANDBAGS ARE PLACED CONTINUOUS ALONG NORTHSIDE OF PHASE 2 LINER EDGE BETWEEN THE GCL AND GEOMEMBRANE.
2. LEACHATE PIPE IS REMOVED FOR CLARITY TO SHOW LINER SYSTEM TIEIN.
3. CONTRACTOR SHALL USE ELECTROFUSION HDPE COUPLING TO CONNECT TO EXISTING LEACHATE COLLECTION PIPE.
4. CONTRACTOR SHALL OVERLAP NEW LINER SYSTEM A MINIMUM OF 1-FOOT ONTO EXISTING AND JOIN LINER SYSTEMS WITH FUSION/EXTRUSION WELD.

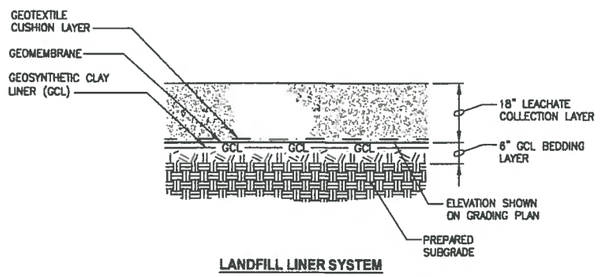

LANDFILL LINER SYSTEM

DETAIL 1

NOT TO SCALE C3, C4, C5, C6

COORDINATE CONTROL SCHEDULE

POINT #	NORTHING	EASTING	ELEVATION	DESCRIPTION
101	10991.40	18902.73	1255.11	NW LINER LIMIT
102	11003.51	19027.76	1214.00	TOE OF SLOPE
103	11034.46	19366.52	1212.00	GRADE
104	11060.77	19649.86	1210.00	GRADE
105	11083.27	19892.21	1208.00	GRADE
106	11085.85	19920.00	1208.00	TOE OF SLOPE
107	11092.26	19989.01	1231.06	NE LINER LIMIT
108	11139.42	18904.48	1216.00	GRADE BREAK
109	11036.49	19021.46	1216.00	GRADE BREAK
110	11036.77	19061.49	1214.00	GRADE BREAK
111	11074.87	19314.98	1213.50	GRADE BREAK
112	11083.63	19409.31	1213.50	GRADE BREAK
113	11082.82	19492.53	1212.00	GRADE BREAK
114	11091.14	19647.04	1210.00	GRADE BREAK
115	11114.99	19903.88	1210.00	GRADE BREAK
116	11098.93	19925.68	1210.00	GRADE BREAK
117	11125.81	19984.87	1230.00	GRADE BREAK
118	11177.03	19923.04	1230.00	GRADE BREAK

COORDINATE CONTROL SCHEDULE

POINT #	NORTHING	EASTING	ELEVATION	DESCRIPTION
301	11094.67	19456.95	1234.00	CL ACCESS ROAD
302	11414.03	19905.81	1234.00	CL ROAD GRADE BREAK
501	10991.92	18888.00	1252.00	END OF DITCH
502	11092.79	20003.82	1230.00	END OF DITCH
701	11021.30	19224.77	NA	INTERIM LINED-BERM EDGE
702	10705.52	19224.76	NA	INTERIM LINED-BERM EDGE
703	11053.34	19569.89	NA	INTERIM LINED-BERM EDGE
704	10737.56	19569.88	NA	INTERIM LINED-BERM EDGE

INFORMATIONAL COPY ONLY - NOT FOR BIDDING PURPOSES

PATH: U:\PSO\Projects\Clients\3746-Grant Cnty\555-3746-001 Ephrata\995vca\CADD\Phase 03\Task 01 Ph3 Development\DWG PLOTTED BY: purgabat DATE: Monday, April 27, 2020 10:10:38 AM
LAYOUT: C4

REVISIONS	DATE	BY

DESIGNED S. EMGE
DRAWN B. PURGANAN
CHECKED I. SUTTON
APPROVED S. EMGE

ONE INCH AT FULL SCALE. IF NOT, SCALE ACCORDINGLY
FILE NAME PS3746001P05T01-C4-5
JOB No. 555-3746-001 05/01
DATE FEBRUARY 2020

STEPHEN M. EMGE, STATE OF WASHINGTON, 34359, REGISTERED PROFESSIONAL ENGINEER
5/1/20

Parametrix
ENGINEERING . PLANNING . ENVIRONMENTAL SCIENCES
719 2ND AVENUE, SUITE 200 | SEATTLE, WA 98104
P 206.394.3700
WWW.PARAMETRIX.COM

PROJECT NAME
EPHRATA LANDFILL
PHASE 3 DEVELOPMENT
GRANT COUNTY PUBLIC WORKS
EPHRATA, WASHINGTON

LANDFILL SECTIONS, DETAILS AND CONTROL SCHEDULE

DRAWING NO. 4 OF 19

C4

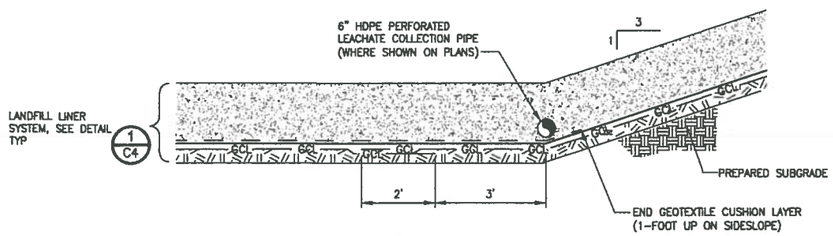

SLOPE TRANSITION
DETAIL (1 / C3)
SCALE: 1"=2'

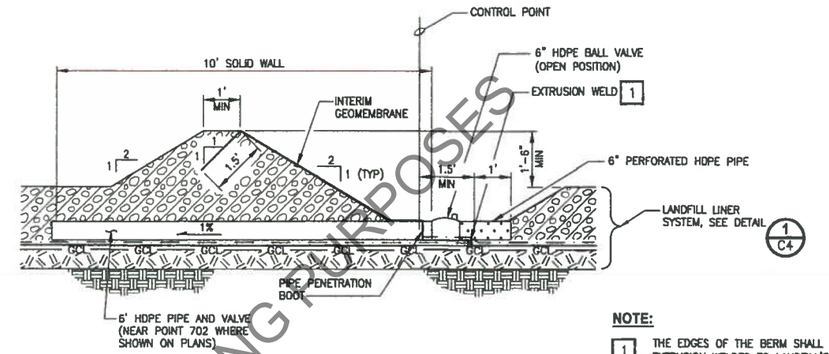

NOTE:

1 THE EDGES OF THE BERM SHALL ALSO BE EXTRUSION WELDED TO LANDFILL'S SOUTH STORMWATER BERM TO PREVENT LEAKAGE.

INTERIM STORMWATER BERM
DETAIL (2 / C3)
SCALE: 1"=2'

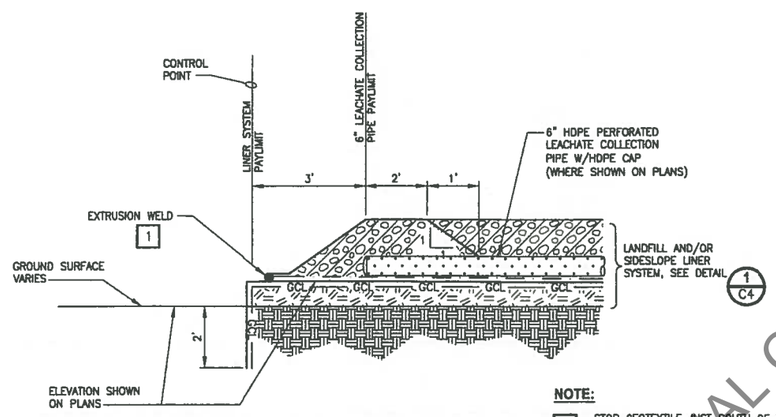

NOTE:

1 STOP GEOTEXTILE JUST SOUTH OF THE GEOMEMBRANE FLAP EXTRUSION WELD.

PHASE 3 NORTH CONTAINMENT BERM/TERMINATION
SECTION (A / C3)
NOT TO SCALE

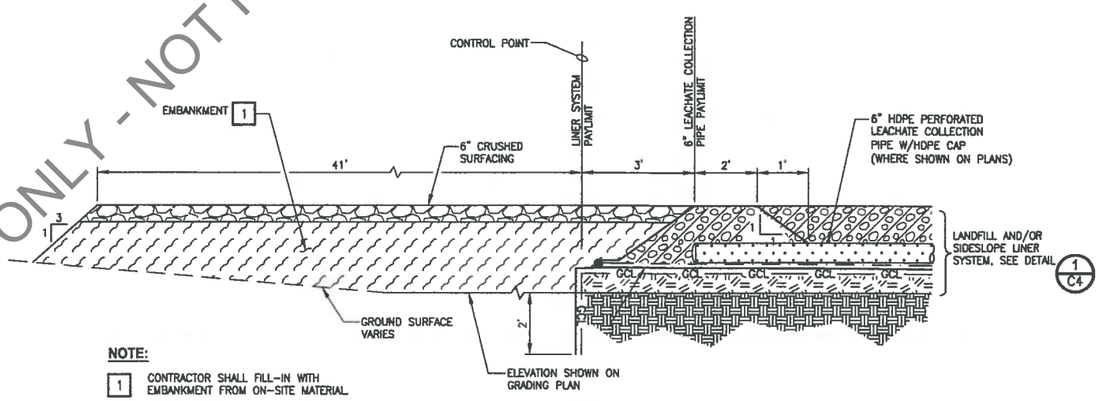

NOTE:

1 CONTRACTOR SHALL FILL-IN WITH EMBANKMENT FROM ON-SITE MATERIAL.

PHASE 2 BOUNDARY LINER TERMINATION/TIPPING AREA
SECTION (B / C3)
NOT TO SCALE

INFORMATIONAL COPY ONLY - NOT FOR BIDDING PURPOSES

REVISIONS	DATE	BY

DESIGNED S. EMGE
DRAWN B. PURGANAN
CHECKED I. SUTTON
APPROVED S. EMGE

ONE INCH AT FULL SCALE. IF NOT, SCALE ACCORDINGLY
FILE NAME PS3746001P05T01-C4-5
JOB No. 555-3746-001 05/01
DATE FEBRUARY 2020

STEPHEN M. EMGE, STATE OF WASHINGTON, REGISTERED PROFESSIONAL ENGINEER
7/1/20

Parametrix
ENGINEERING . PLANNING . ENVIRONMENTAL SCIENCES
719 2ND AVENUE, SUITE 200 | SEATTLE, WA 98104
P 206.394.3700
WWW.PARAMETRIX.COM

PROJECT NAME
EPHRATA LANDFILL
PHASE 3 DEVELOPMENT
GRANT COUNTY PUBLIC WORKS
EPHRATA, WASHINGTON

LANDFILL SECTIONS AND DETAILS

DRAWING NO.
5 OF 19
C5

PATH: U:\PSO\Projects\Clients\3746-Grant Cnty\555-3746-001 Ephrata\995vca\CADD\Phase 03\Task 01 PH3 Development\DWG PLOTTED BY: purgabut DATE: Monday, April 27, 2020 10:10:44 AM
LAYOUT: C5

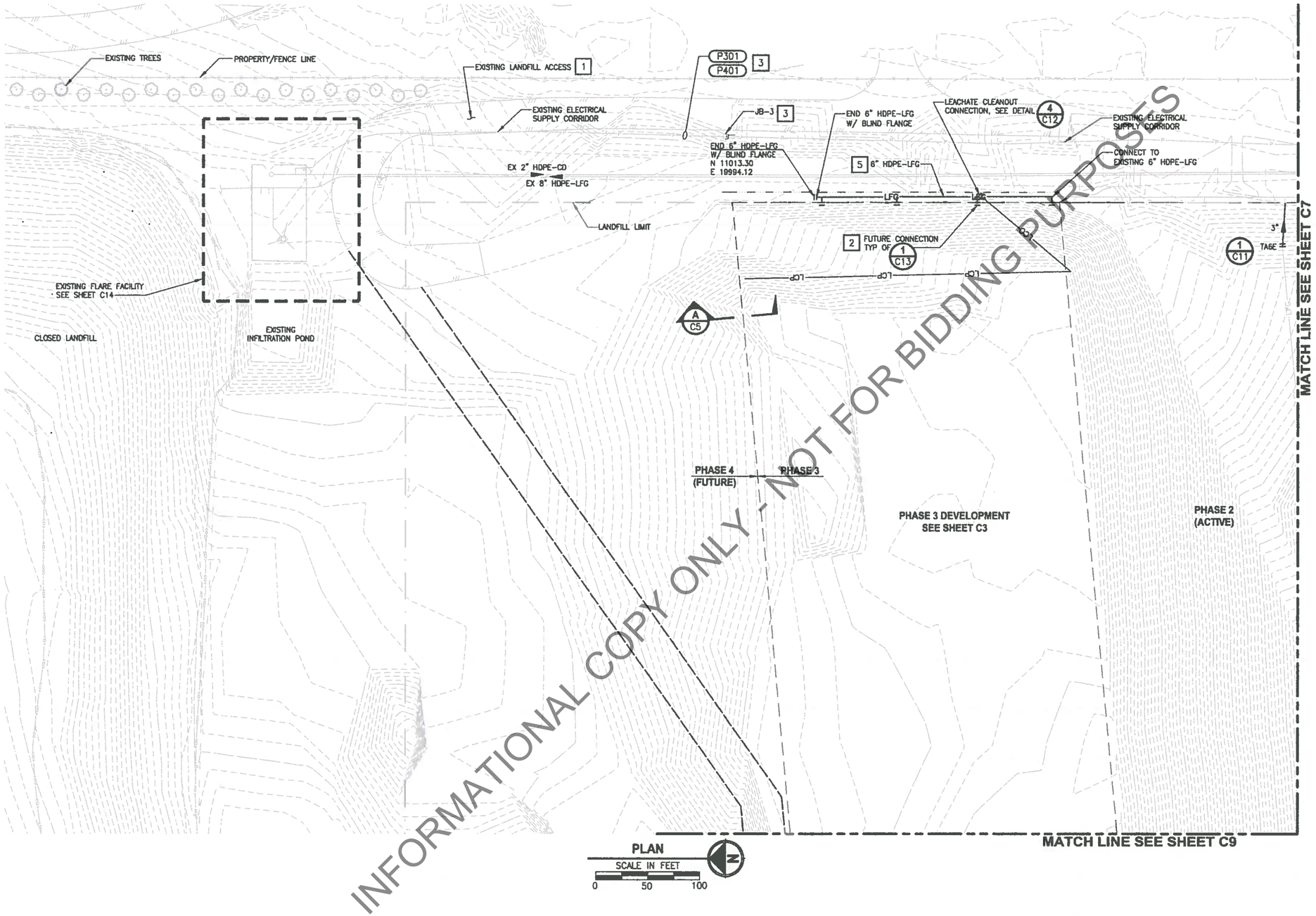

INFORMATIONAL COPY ONLY - NOT FOR BIDDING PURPOSES

NOTES:

1. LANDFILL ACCESS ROAD SHALL REMAIN OPEN AT ALL TIMES DURING LANDFILL NORMAL OPERATION HOURS. CONTRACTOR SHALL FOLLOW SPECIFICATIONS.
2. FUTURE CONNECTIONS FOR PHASE 3 SHALL BE 75' O.C. ALONG THE 6" HDPE LATERAL AS DIRECTED BY THE ENGINEER.
3. EXISTING CONDUIT, SEE ELECTRICAL DRAWINGS AND SPECIFICATIONS FOR ELECTRICAL INFORMATION.
4. EXISTING CABLE VAULT PER WSDOT STANDARD PLAN J15B.
5. CONTRACTOR SHALL INSTALL FUTURE CONNECTION EQUAL PLACED BETWEEN EXISTING HORIZONTAL TRENCHES, OR AS DIRECTED BY ENGINEER. FUTURE CONNECTION CONSISTS OF 6"X4" REDUCING TEE W/ 4" SS BLIND FLANGE CONNECTION.

REVISIONS	DATE	BY

DESIGNED S. EMGE
DRAWN B. PURGANAN
CHECKED I. SUTTON
APPROVED S. EMGE

ONE INCH AT FULL SCALE. IF NOT, SCALE ACCORDINGLY
FILE NAME PS3746001P05T01-C6-9
JOB No. 555-3746-001 05/01
DATE FEBRUARY 2020

STEPHEN M. EMGE STATE OF WASHINGTON 37089 REGISTERED PROFESSIONAL ENGINEER
7/1/20

Parametrix
ENGINEERING . PLANNING . ENVIRONMENTAL SCIENCES
719 2ND AVENUE, SUITE 200 | SEATTLE, WA 98104
P 206.394.3700
WWW.PARAMETRIX.COM

PROJECT NAME
EPHRATA LANDFILL
PHASE 3 DEVELOPMENT
GRANT COUNTY PUBLIC WORKS
EPHRATA, WASHINGTON

LANDFILL GAS PLAN AND ELECTRICAL CONDUITS - NORTHEAST

DRAWING NO.
6 OF 19
C6

PATH: U:\PSO\Projects\Clients\3746-Grant Cnty\555-3746-001 Ephrata\995vce\CADD\Phase 05\Task 01 PH3 Development\DWG PLOTTED BY: purganbat DATE: Monday, April 27, 2020 10:11:23 AM
LAYOUT: C6

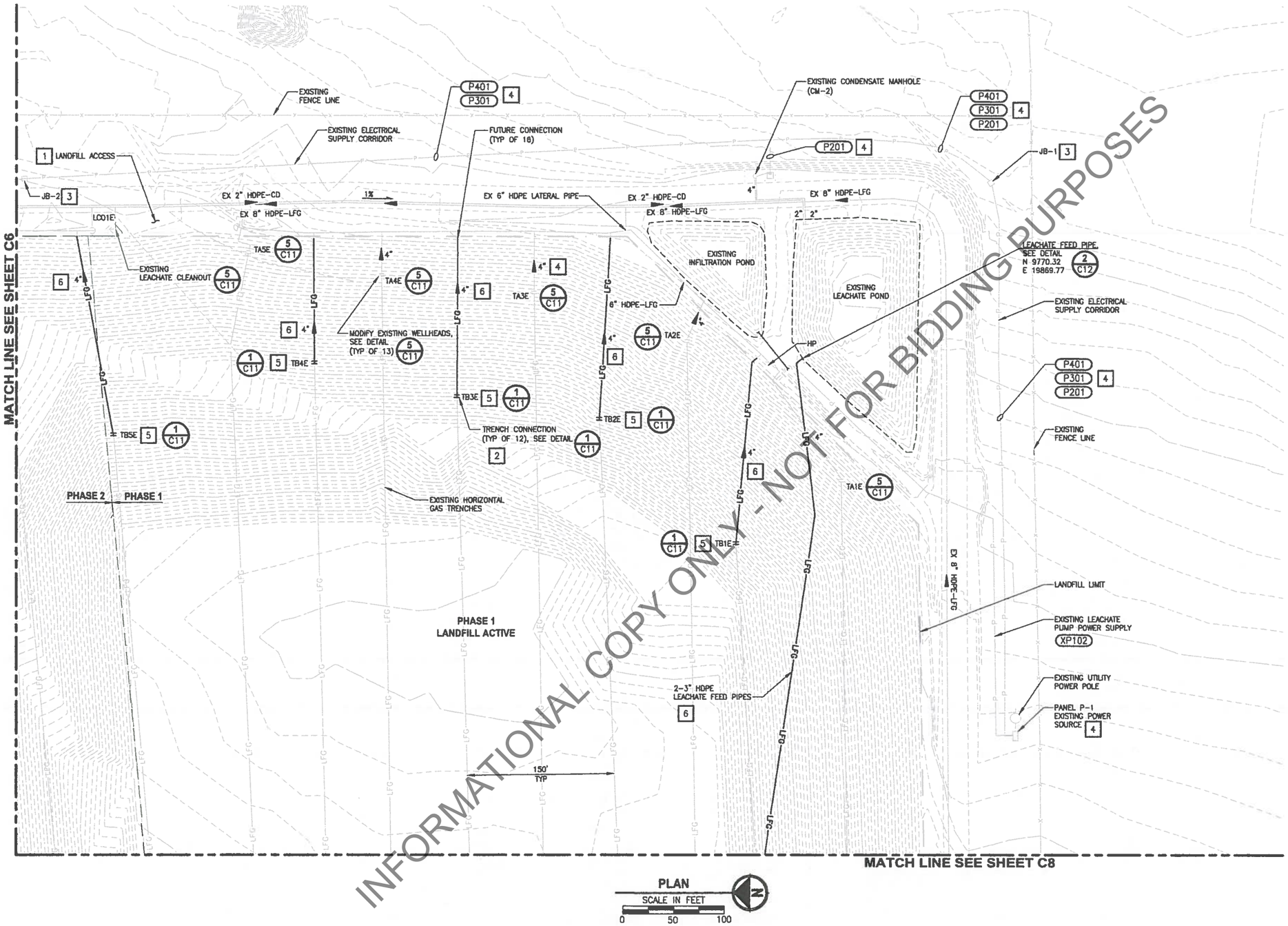

INFORMATIONAL COPY ONLY - NOT FOR BIDDING PURPOSES

NOTES:

1. LANDFILL ACCESS ROAD SHALL REMAIN OPEN AT ALL TIMES DURING LANDFILL NORMAL OPERATION HOURS. CONTRACTOR SHALL FOLLOW SPECIFICATIONS.
2. CONTRACTOR SHALL SECURE ALL 4" HDPE LATERAL PIPES WITH SOIL AT TRENCH CONNECTION AS DIRECTED BY ENGINEER.
3. EXISTING CABLE VAULT PER WSDOT STANDARD PLAN J15B.
4. EXISTING CONDUIT, SEE ELECTRICAL DRAWINGS FOR ELECTRICAL INFORMATION.
5. CONTRACTOR SHALL CONNECT TB1E, TB2E, TB3E, AND TB5E TO LATERAL PIPE, NOT TB4E.
6. CONTRACTOR SHALL COVER PIPES WITH SOIL AS DIRECTED BY ENGINEER.

REVISIONS	DATE	BY

DESIGNED S. EMGE
DRAWN B. PURGANAN
CHECKED I. SUTTON
APPROVED S. EMGE

ONE INCH AT FULL SCALE. IF NOT, SCALE ACCORDINGLY
FILE NAME PS3746001P05T01-C6-9
JOB No. 555-3746-001 05/01
DATE FEBRUARY 2020

STEPHEN M. EMGE, STATE OF WASHINGTON, 34389, REGISTERED PROFESSIONAL ENGINEER
7/1/20

Parametrix
ENGINEERING . PLANNING . ENVIRONMENTAL SCIENCES
719 2ND AVENUE, SUITE 200 | SEATTLE, WA 98104
P 206.394.3700
WWW.PARAMETRIX.COM

PROJECT NAME
EPHRATA LANDFILL
PHASE 3 DEVELOPMENT
GRANT COUNTY PUBLIC WORKS
EPHRATA, WASHINGTON

LANDFILL GAS PLAN AND ELECTRICAL CONDUITS - SOUTHEAST

DRAWING NO. 7 OF 19
C7

PATH: U:\PSO\Projects\Clients\3746-Grant Cnty\555-3746-001 Ephrata\995xrs\CADD\Phase 05\Task 01 PH3 Development\DWG PLOTTED BY: purgobut DATE: Monday, April 27, 2020 10:11:29 AM
LAYOUT: C7

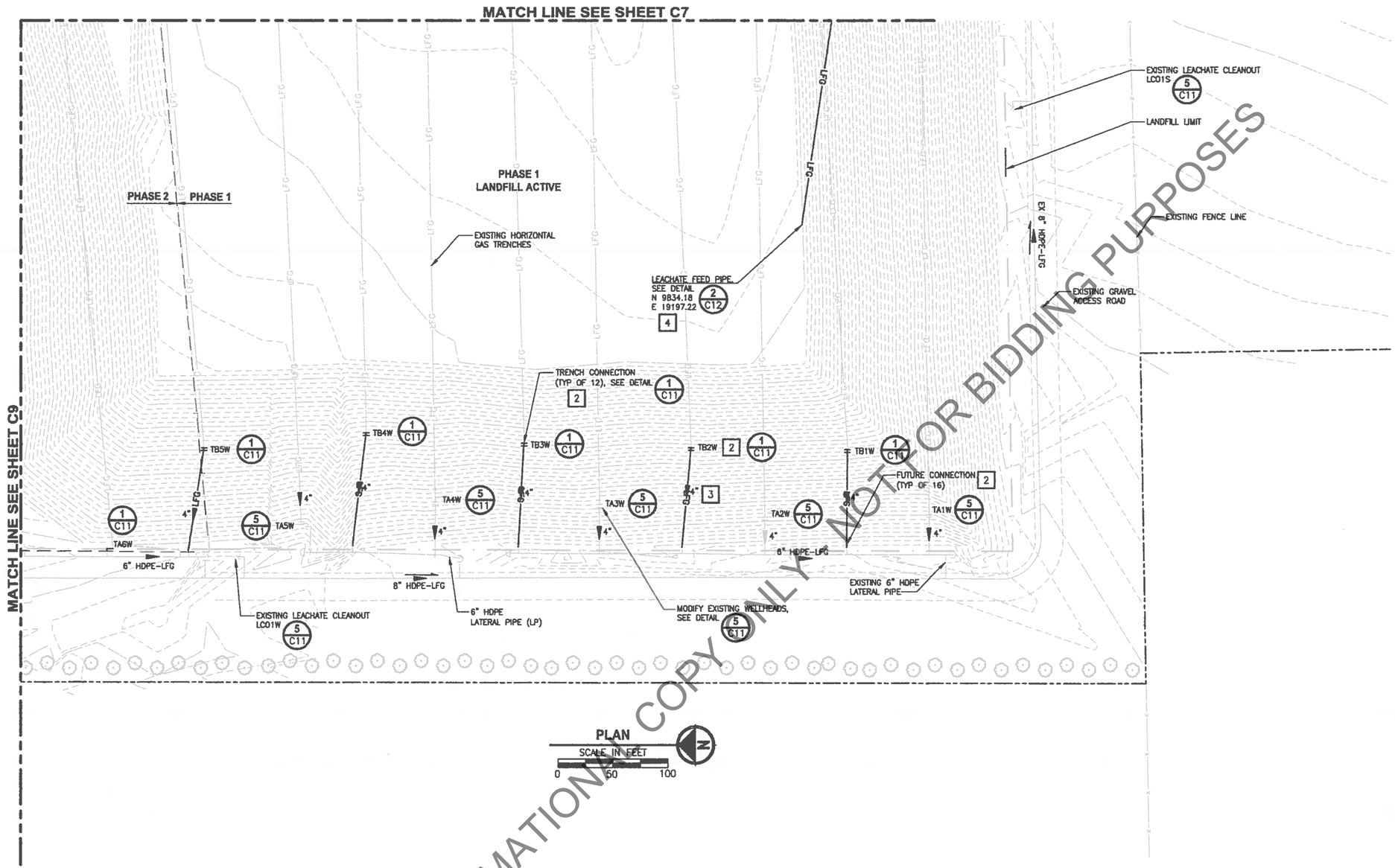

NOTES:

1. CONTRACTOR SHALL CONNECT TO EXISTING FUTURE CONNECTIONS FOR TRENCHES, OR AS DIRECTED BY ENGINEER.
2. CONTRACTOR SHALL SECURE ALL 4" HDPE LATERAL PIPES WITH SOIL AT TRENCH CONNECTION AS DIRECTED BY ENGINEER.
3. CONTRACTOR SHALL COVER PIPES WITH SOIL AS DIRECTED BY ENGINEER.
4. ACTUAL LOCATION MAY BE ALTERED DEPENDING ON HEIGHT OF LANDFILL.

INFORMATIONAL COPY ONLY
NOT FOR BIDDING PURPOSES

REVISIONS	DATE	BY

DESIGNED S. EMGE
DRAWN B. PURGANAN
CHECKED I. SUTTON
APPROVED S. EMGE

ONE INCH AT FULL SCALE, IF NOT, SCALE ACCORDINGLY
FILE NAME PS3746001P05T01-C6-9
JOB No. 555-3746-001 05/01
DATE FEBRUARY 2020

STEPHEN M. EMGE, STATE OF WASHINGTON, 34389, REGISTERED PROFESSIONAL ENGINEER
5/1/20

Parametrix
ENGINEERING . PLANNING . ENVIRONMENTAL SCIENCES
719 2ND AVENUE, SUITE 200 | SEATTLE, WA 98104
P 206.394.3700
WWW.PARAMETRIX.COM

PROJECT NAME
EPHRATA LANDFILL
PHASE 3 DEVELOPMENT
GRANT COUNTY PUBLIC WORKS
EPHRATA, WASHINGTON

LANDFILL GAS PLAN - SOUTHWEST

DRAWING NO.
8 OF 19
C8

PATH: U:\PSO\Projects\Clients\3746-Grant Cnty\555-3746-001 Ephrata\09Svcs\CADD\Phase 05\Task 01 Ph3 Development\DWG PLOTTED BY: purgabut DATE: Monday, April 27, 2020 10:11:34 AM
LAYOUT: C8

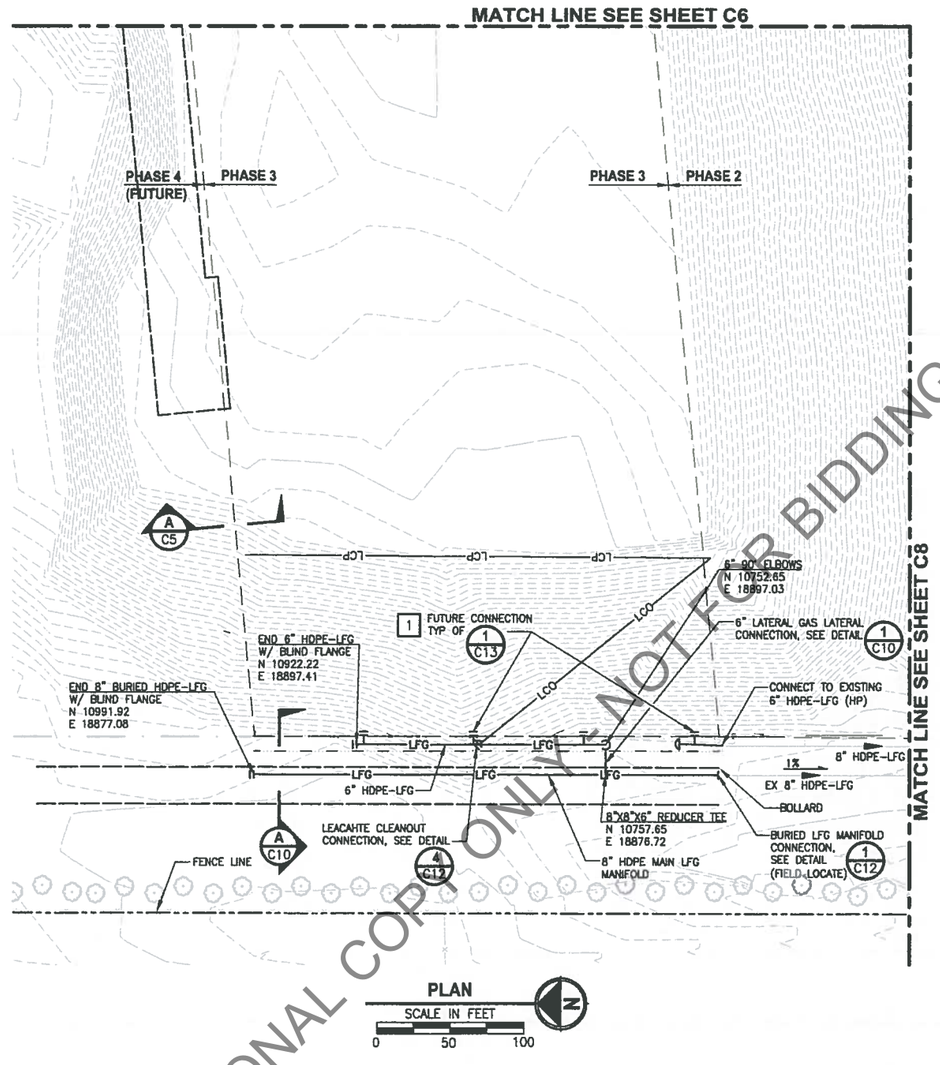

NOTE:

1. FUTURE CONNECTIONS FOR PHASE 3 SHALL BE 75' O.C. ALONG THE 6" HDPE LATERAL AS DIRECTED BY THE ENGINEER.

INFORMATIONAL COPY ONLY - NOT FOR BIDDING PURPOSES

REVISIONS	DATE	BY

DESIGNED S. EMGE
DRAWN B. PURGANAN
CHECKED I. SUTTON
APPROVED S. EMGE

ONE INCH AT FULL SCALE. IF NOT, SCALE ACCORDINGLY
FILE NAME PS3746001P05T01-C6-9
JOB No. 555-3746-001 05/01
DATE FEBRUARY 2020

STEPHEN M. EMGE, STATE OF WASHINGTON, 54389, REGISTERED PROFESSIONAL ENGINEER 7/6/20

Parametrix
ENGINEERING . PLANNING . ENVIRONMENTAL SCIENCES
719 2ND AVENUE, SUITE 200 | SEATTLE, WA 98104
P 206.394.3700
WWW.PARAMETRIX.COM

PROJECT NAME
EPHRATA LANDFILL
PHASE 3 DEVELOPMENT
GRANT COUNTY PUBLIC WORKS
EPHRATA, WASHINGTON

LANDFILL GAS PLAN - NORTHWEST

DRAWING NO. 9 OF 19
C9

LAYOUT: C9 PATH: U:\PSO\Projects\Clients\3746-Grant Cnty\555-3746-001 Ephrata\995vca\CADD\Phase 03\Task 01 PH3 Development\DWG PLOTTED BY: purgabut DATE: Monday, April 27, 2020 10:11:39 AM

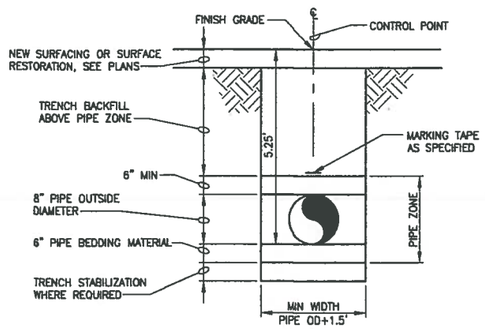

BURIED MAIN LANDFILL GAS PIPE TRENCH
SECTION A / C9
NOT TO SCALE

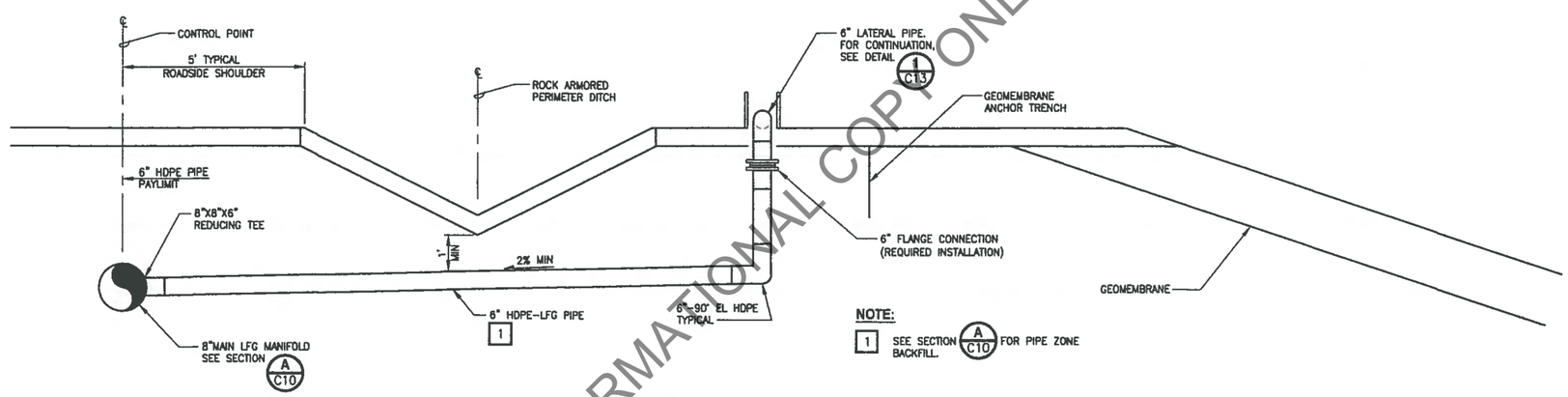

NOTE:
1 SEE SECTION A / C10 FOR PIPE ZONE BACKFILL.

LANDFILL GAS LATERAL CONNECTION
DETAIL 1
NOT TO SCALE C9, C13

INFORMATIONAL COPY ONLY - NOT FOR BIDDING PURPOSES

REVISIONS	DATE	BY

DESIGNED S. EMGE
DRAWN B. PURGANAN
CHECKED I. SUTTON
APPROVED S. EMGE

ONE INCH AT FULL SCALE. IF NOT, SCALE ACCORDINGLY
FILE NAME PS3746001P05T01-C10-13
JOB No. 555-3746-001 05/01
DATE FEBRUARY 2020

STEPHEN W. EMGE, STATE OF WASHINGTON, 54359, REGISTERED PROFESSIONAL ENGINEER, 2/10/20

Parametrix
ENGINEERING . PLANNING . ENVIRONMENTAL SCIENCES
719 2ND AVENUE, SUITE 200 | SEATTLE, WA 98104
P 206.394.3700
WWW.PARAMETRIX.COM

PROJECT NAME
EPHRATA LANDFILL
PHASE 3 DEVELOPMENT
GRANT COUNTY PUBLIC WORKS
EPHRATA, WASHINGTON

LANDFILL GAS SECTIONS AND DETAILS

DRAWING NO.
10 OF 19
C10

LAYOUT: C10 PATH: U:\PSO\Projects\Clients\3746-Grant Cnty\555-3746-001 Ephrata\995vce\CADD\Phase 05\Task 01 PH3 Development\DWG PLOTTED BY: purgabut DATE: Monday, April 27, 2020 10:11:49 AM

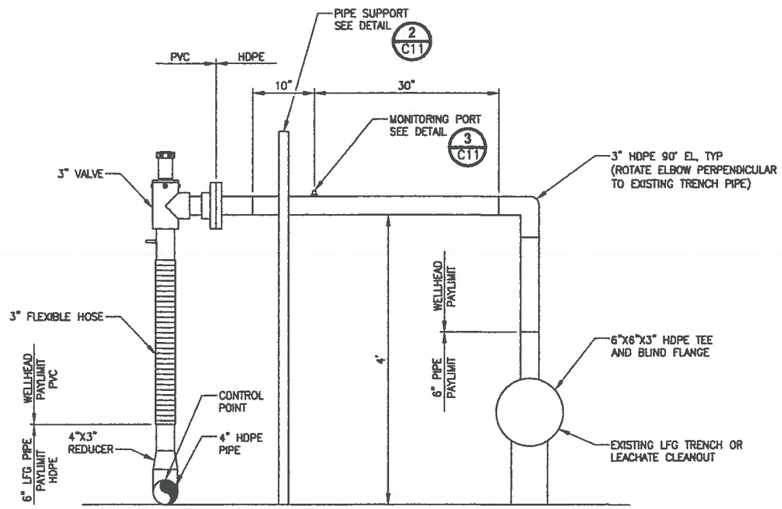

TYPICAL LFG WELLHEAD
DETAIL 1
NOT TO SCALE C6, C7, C8, C12

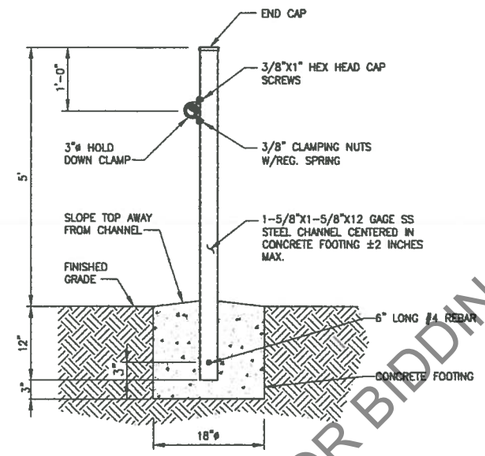

WELLHEAD PIPE SUPPORT
DETAIL 2
NOT TO SCALE C11, C12

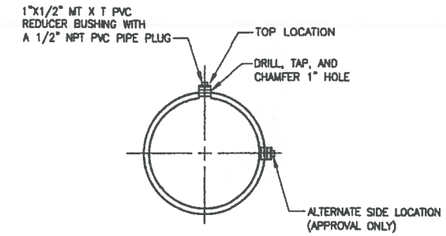

MONITORING PORT
DETAIL 3
NOT TO SCALE C11, C13, C14

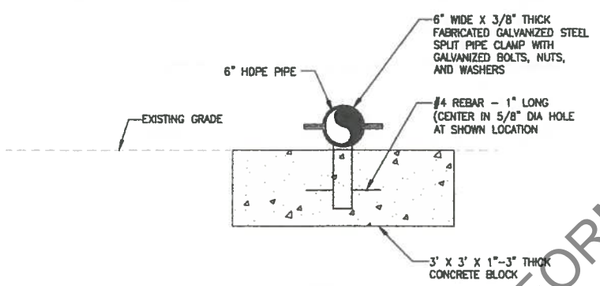

ANCHOR BLOCK
DETAIL 4
NOT TO SCALE C12, C13

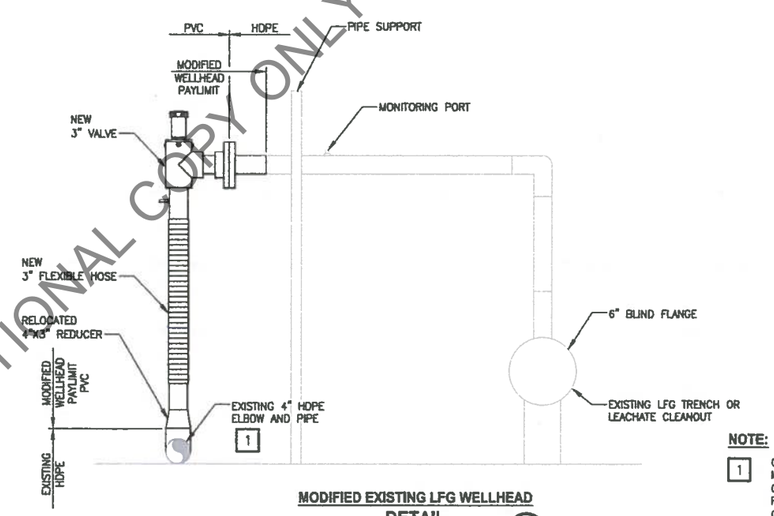

MODIFIED EXISTING LFG WELLHEAD
DETAIL 5
NOT TO SCALE C7, C8

NOTE:

1. CONTRACTOR SHALL MODIFY EXISTING WELLHEADS. MODIFICATIONS SHALL REQUIRE REMOVAL OF EXISTING GATE VALVE, SS/HDPE TRANSITION, 90° ELBOW, SS FLANGE CONNECTION. WILL ALSO REQUIRE REMOVAL OF SOIL MATERIAL AROUND 4" ELBOW TO RELOCATE EXISTING 4X3 REDUCER ABOVE ELBOW. REPLACE SOIL MATERIAL AROUND PIPE AFTER APPROVAL.

INFORMATIONAL COPY ONLY - NOT FOR BIDDING PURPOSES

▷	REVISIONS	DATE	BY	DESIGNED S. EMGE
				DRAWN B. PURGANAN
				CHECKED I. SUTTON
				APPROVED S. EMGE

ONE INCH AT FULL SCALE. IF NOT, SCALE ACCORDINGLY
FILE NAME PS3746001P05T01-C10-13
JOB No. 555-3746-001 05/01
DATE FEBRUARY 2020

STEPHEN M. EMGE — STATE OF WASHINGTON — 54260 — REGISTERED PROFESSIONAL ENGINEER — 2/10/20

Parametrix
ENGINEERING . PLANNING . ENVIRONMENTAL SCIENCES
719 2ND AVENUE, SUITE 200 | SEATTLE, WA 98104
P 206.394.3700
WWW.PARAMETRIX.COM

PROJECT NAME
EPHRATA LANDFILL
PHASE 3 DEVELOPMENT
GRANT COUNTY PUBLIC WORKS
EPHRATA, WASHINGTON

LANDFILL GAS SECTIONS AND DETAILS

DRAWING NO. 11 OF 19
C11

LAYOUT: C11 PATH: U:\PSO\Projects\Clients\3746-Grant Cnty\555-3746-001 Ephrata\WRSwca\CADD\Phase 05\Task 01 PH3 Development\DWG PLOTTED BY: purgobut DATE: Monday, April 27, 2020 10:11:54 AM

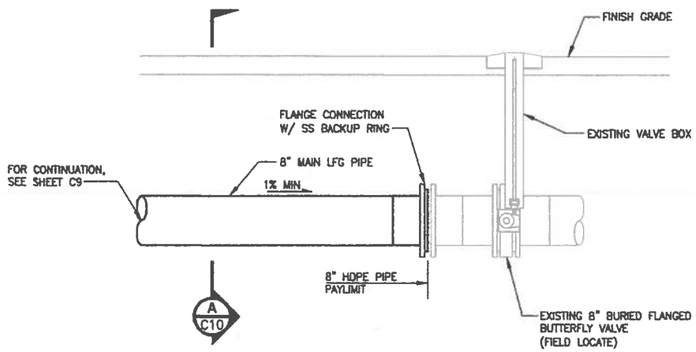

BURIED LFG MANIFOLD CONNECTION
DETAIL 1 / C9
NOT TO SCALE

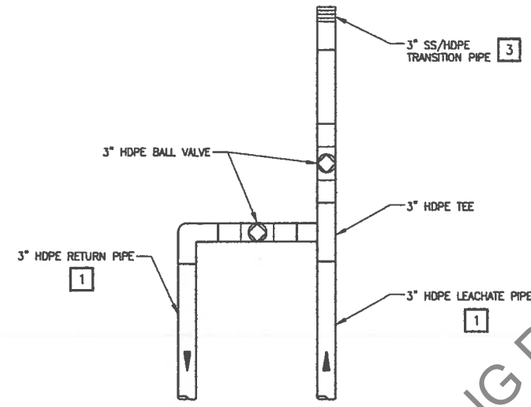

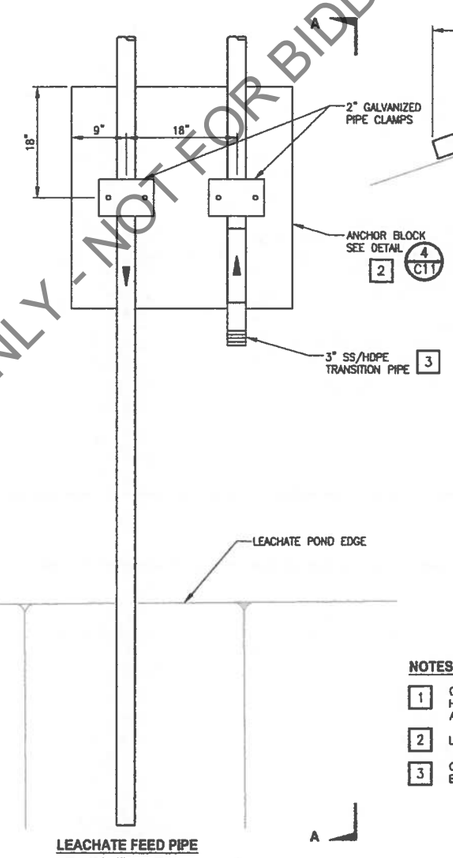

LEACHATE FEED PIPE
DETAIL 2 / C7, C8
NOT TO SCALE

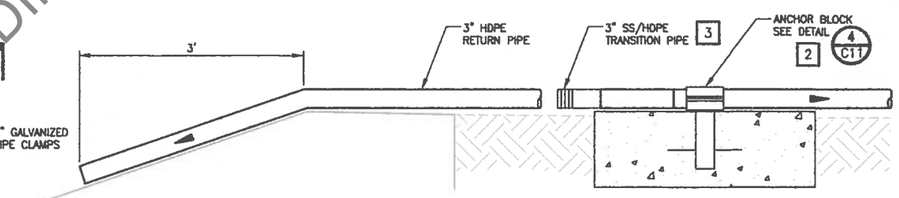

SECTION A-A
NOT TO SCALE

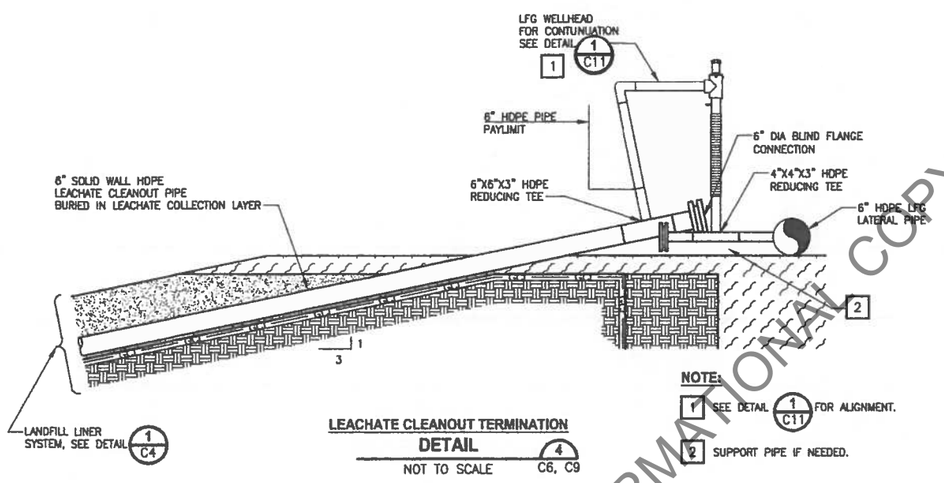

LEACHATE CLEANOUT TERMINATION
DETAIL 4 / C6, C9
NOT TO SCALE

NOTE:

1. SEE DETAIL 1 / C11 FOR ALIGNMENT.
2. SUPPORT PIPE IF NEEDED.

NOTES:

1. CONTRACTOR SHALL PLACE SOIL OVER 3" HDPE PIPES AS SHOWN ON SHEE C7 OR AS DIRECTED BY ENGINEER.
2. LOCATION AS DIRECTED BY ENGINEERS.
3. OWNER WILL CONNECT TO FEED SS/HDPE ENDS.

INFORMATIONAL COPY ONLY - NOT FOR BIDDING PURPOSES

	REVISIONS	DATE	BY	
				DESIGNED S. EMGE
				DRAWN B. PURGANAN
				CHECKED I. SUTTON
				APPROVED S. EMGE

ONE INCH AT FULL SCALE. IF NOT, SCALE ACCORDINGLY
FILE NAME PS3746001P05T01-C10-13
JOB No. 555-3746-001 05/01
DATE FEBRUARY 2020

STEPHEN M. EMGE, STATE OF WASHINGTON, 34388, REGISTERED PROFESSIONAL ENGINEER 2/6/20

Parametrix
ENGINEERING . PLANNING . ENVIRONMENTAL SCIENCES
719 2ND AVENUE, SUITE 200 | SEATTLE, WA 98104
P 206.394.3700
WWW.PARAMETRIX.COM

PROJECT NAME
EPHRATA LANDFILL
PHASE 3 DEVELOPMENT
GRANT COUNTY PUBLIC WORKS
EPHRATA, WASHINGTON

LANDFILL GAS SECTIONS AND DETAILS

DRAWING NO.
12 OF 19
C12

PATH: U:\PSO\Projects\Clients\3746-Grant Cnty\555-3746-001 Ephrata\995vca\CADD\Phase 05\Task 01 PH3 Development\DWG PLOTTED BY: purgabut DATE: Monday, April 27, 2020 10:11:58 AM
LAYOUT: C12

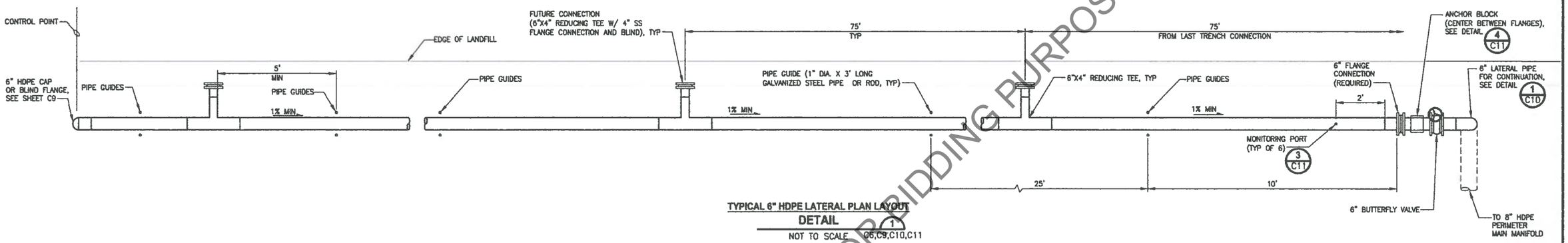

TYPICAL 6" HDPE LATERAL PLAN LAYOUT

DETAIL 1

NOT TO SCALE C6,C9,C10,C11

INFORMATIONAL COPY ONLY - NOT FOR BIDDING PURPOSES

PATH: U:\P50\Projects\Clients\3746-Grant Cnty\555-3746-001 Ephrata\995vce\CADD\Phase 03\Task 01 PH3 Development\DWG PLOTTED BY: purgabut DATE: Monday, April 27, 2020 10:12:03 AM
LAYOUT: C13

REVISIONS	DATE	BY

DESIGNED S. EMGE
DRAWN B. PURGANAN
CHECKED I. SUTTON
APPROVED S. EMGE

ONE INCH AT FULL SCALE. IF NOT, SCALE ACCORDINGLY
FILE NAME P53746001P05T01-C10-13
JOB No. 555-3746-001.05/01
DATE FEBRUARY 2020

STEPHEN M. WOOD STATE OF WASHINGTON 54389 REGISTERED PROFESSIONAL ENGINEER 4/6/20

Parametrix
ENGINEERING . PLANNING . ENVIRONMENTAL SCIENCES
719 2ND AVENUE, SUITE 200 | SEATTLE, WA 98104
P 206.394.3700
WWW.PARAMETRIX.COM

PROJECT NAME
EPHRATA LANDFILL
PHASE 3 DEVELOPMENT
GRANT COUNTY PUBLIC WORKS
EPHRATA, WASHINGTON

LANDFILL GAS SECTIONS AND DETAILS

DRAWING NO. 13 OF 19

C13

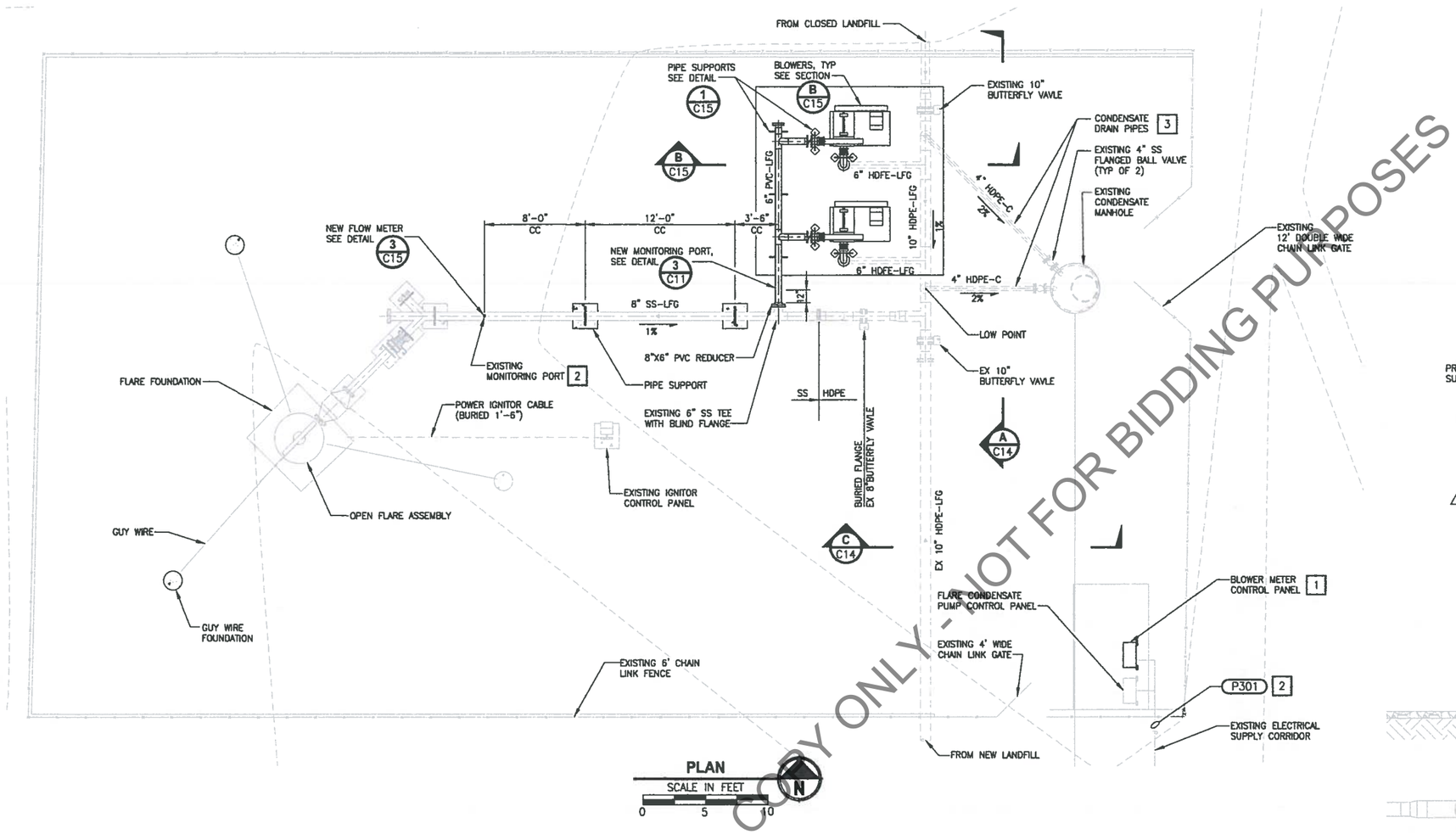

PLAN

SCALE IN FEET 0 5 10

N

NOTES:

1. SEE SHEET E1 FOR ELECTRICAL FLARE FACILITY PLAN.
2. EXISTING CONDUIT, SEE ELECTRICAL DRAWINGS AND SPECIFICATIONS FOR ELECTRICAL INFORMATION.
3. CONTRACTOR SHALL VERIFY THE CONDITION OF THE TWO 4" HDPE CONDENSATE DRAIN PIPES PER THE SPECIFICATIONS. THE PIPES SHALL DRAIN FREELY FROM THE EXISTING 10" HDPE-LFG TO THE CONDENSATE MANHOLE.
4. CONTRACTOR SHALL REMOVE EXCESS CRUSHED SURFACING TO EXPOSE PIPE SUPPORTS AND PIPE ENDS.

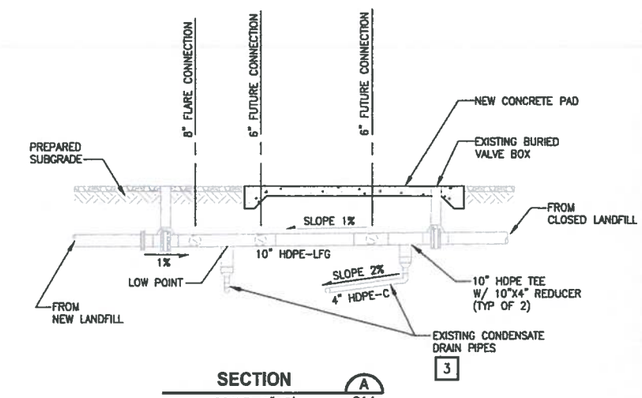

SECTION A C14

SCALE: 1"=5'

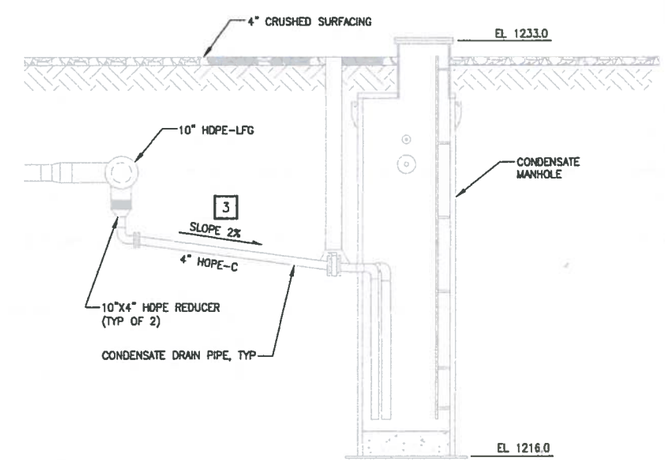

SECTION C C14

SCALE: 1"=5'

INFORMATIONAL COPY ONLY - NOT FOR BIDDING PURPOSES

REVISIONS	DATE	BY

DESIGNED S. EMGE
DRAWN B. PURGANAN
CHECKED I. SUTTON
APPROVED S. EMGE

ONE INCH AT FULL SCALE. IF NOT, SCALE ACCORDINGLY

FILE NAME PS3746001P05T01-C14-15
JOB No. 555-3746-001 05/01
DATE FEBRUARY 2020

STEPHEN M. MILLER, STATE OF WASHINGTON, REGISTERED PROFESSIONAL ENGINEER

Parametrix
ENGINEERING . PLANNING . ENVIRONMENTAL SCIENCES
719 2ND AVENUE, SUITE 200 | SEATTLE, WA 98104
P 206.394.3700
WWW.PARAMETRIX.COM

PROJECT NAME
EPHRATA LANDFILL
PHASE 3 DEVELOPMENT
GRANT COUNTY PUBLIC WORKS
EPHRATA, WASHINGTON

FLARE FACILITY PLAN

DRAWING NO.
14 OF 19
C14

LAYOUT: C14 PATH: U:\P50\Projects\Clients\3746-Grant Cnty\555-3746-001 Ephrata\995ves\CADD\Phase 05\Task 01 PH3 Development\DWG PLOTTED BY: purgabut DATE: Monday, April 27, 2020 10:12:39 AM

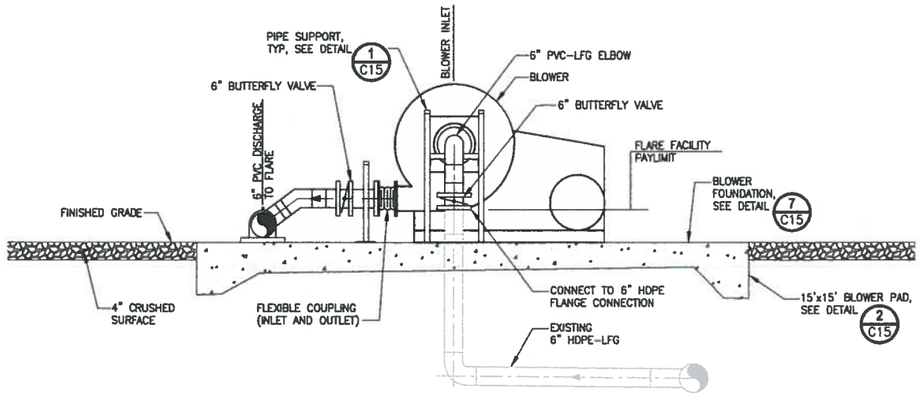

NOTE:

1. CONTRACTOR SHALL VERIFY ALL DIMENSIONS SO NEW INLET AND DISCHARGE BLOWER PIPING IS IN ALIGNMENT WITH BLOWER.

BLOWER SECTION 1 — B/C14
NOT TO SCALE

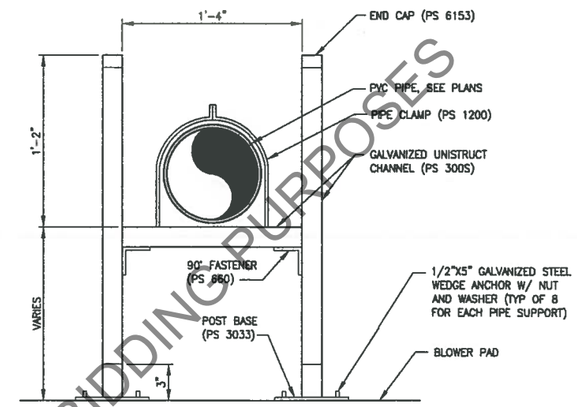

PIPE SUPPORT DETAIL — 1/C14, C15
NOT TO SCALE

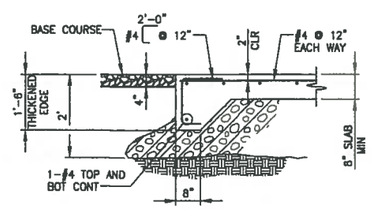

BLOWER PAD DETAIL — 2/C15
NOT TO SCALE

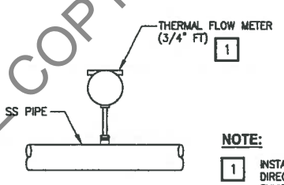

NOTE:

1. INSTALL PER MANUFACTURER'S DIRECTIONS FOR SATURATED ENVIRONMENT. DISPLAY SHALL BE MOUNTED AT ELECTRICAL PAD PER THE SPECIFICATIONS.

FLOW METER JUNCTION BOX DETAIL — 3/C14
NOT TO SCALE

INFORMATIONAL COPY ONLY - NOT FOR BIDDING PURPOSES

REVISIONS	DATE	BY

DESIGNED S. EMGE
DRAWN B. PURGANAN
CHECKED I. SUTTON
APPROVED S. EMGE

ONE INCH AT FULL SCALE. IF NOT, SCALE ACCORDINGLY
FILE NAME PS3746001P05T01-C14-15
JOB No. 555-3746-001 05/01
DATE FEBRUARY 2020

STEPHEN M. EMGE — STATE OF WASHINGTON — 40089 — REGISTERED PROFESSIONAL ENGINEER
5/1/20

Parametrix
ENGINEERING . PLANNING . ENVIRONMENTAL SCIENCES
719 2ND AVENUE, SUITE 200 | SEATTLE, WA 98104
P 206.394.3700
WWW.PARAMETRIX.COM

PROJECT NAME
EPHRATA LANDFILL
PHASE 3 DEVELOPMENT
GRANT COUNTY PUBLIC WORKS
EPHRATA, WASHINGTON

FLARE FACILITY DETAILS

DRAWING NO.
15 OF 19
C15

PATH: U:\PSO\Projects\Clients\3746-Grant Cnty\555-3746-001 Ephrata\995vca\CADD\Phase 05\Task 01 PH3 Development\DWG PLOTTED BY: purgobut DATE: Monday, April 27, 2020 10:12:45 AM
LAYOUT: C15

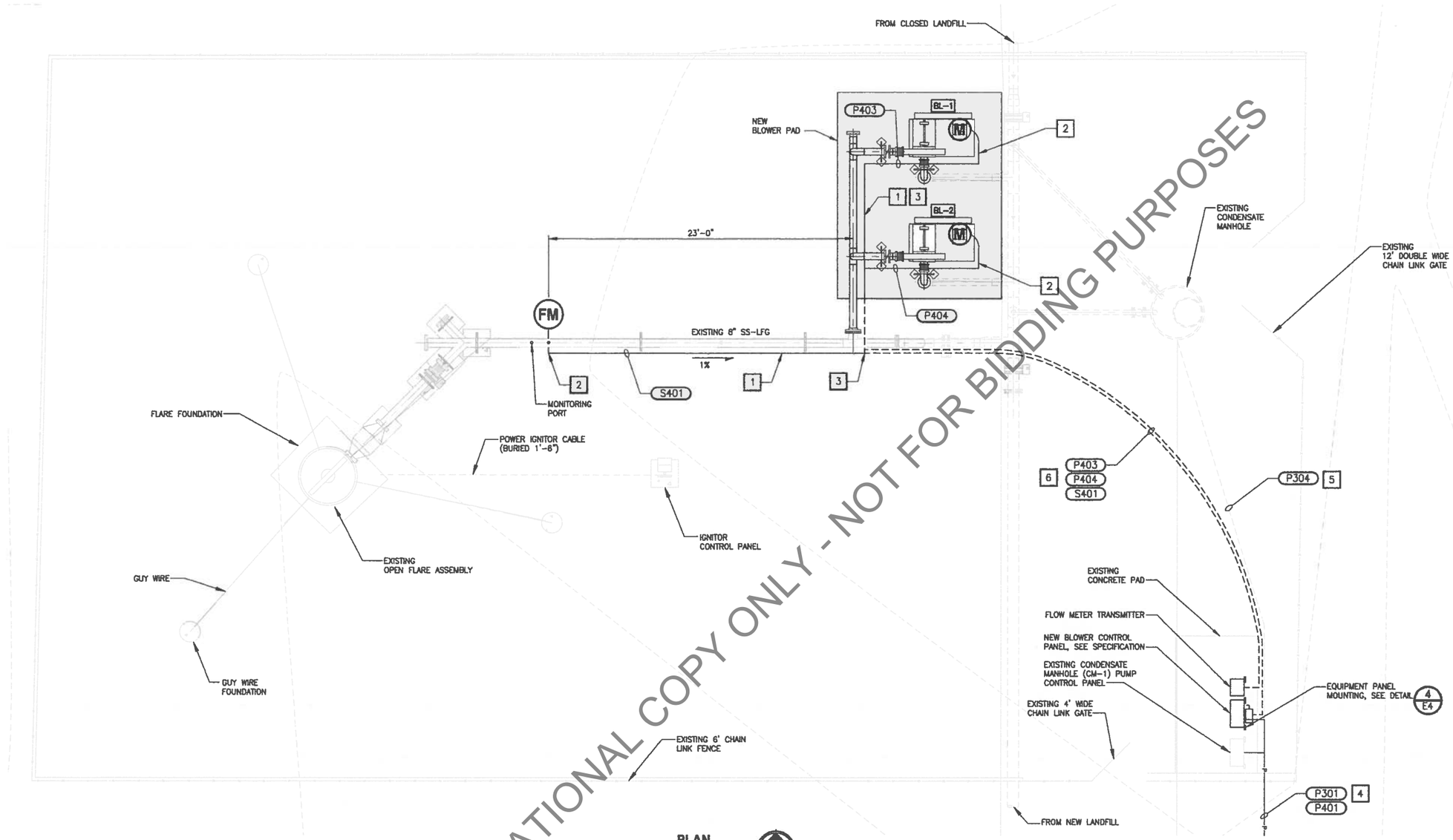

NOTES:

1. PROVIDE CONDUIT SUPPORT. SEE DETAIL 2/E4
2. PROVIDE FLEXIBLE WATERTIGHT METALLIC CONDUIT AND SEALING FITTINGS FOR FINAL CONNECTION FROM GRS.
3. PROVIDE AND RUN CONDUITS, ALONG PIPE, AS NECESSARY. BURY CONDUITS BETWEEN CONCRETE PADS AND PANEL. SEE DETAIL 3/E4
4. SEE SHEETS C7 AND C8 FOR CONTINUATION OF EXISTING ELECTRICAL SUPPLY CORRIDOR. PROVIDE CONDUCTOR PER CONDUIT AND CABLE SCHEDULE.
5. EXISTING CONDUIT.
6. BURIAL DEPTH PER NEC. PROVIDE DETECTABLE UNDERGROUND UTILITY WARNING TAPE.

HAZARDOUS AREA CLASSIFIED AS CLASS-1, DIVISION-2, GROUP-D AREA. (EXPLOSION HAZARD WITHIN 15-FOOT RADIUS OF ALL FLANGES AND SOURCES OF LEAKAGE.) ALL WIRING WITHIN THIS AREA SHALL CONFORM TO THE NATIONAL ELECTRICAL CODE. PROVIDE SEAL FITTINGS, EXPLOSION PROOF JUNCTION BOXES AND OTHER EQUIPMENT AS REQUIRED.

INFORMATIONAL COPY ONLY - NOT FOR BIDDING PURPOSES

PATH: U:\PSO\Projects\Clients\3746-Grant Cnty\555-3746-001 Ephrata\PSSvcs\CADD\Phase 03\Task 01 PH3 Development\DWG PLOTTED BY: purganbat DATE: Monday, April 27, 2020 10:13:16 AM
LAYOUT: E1

REVISIONS	DATE	BY

DESIGNED R. ROHLER
DRAWN B. PURGANAN
CHECKED C. WITTMAN
APPROVED R. ROHLER

ONE INCH AT FULL SCALE. IF NOT, SCALE ACCORDINGLY
FILE NAME PS3746001P05T01-E1
JOB No. 555-3746-001 05/01
DATE FEBRUARY 2020

ROBERT W. ROHLER — STATE OF WASHINGTON — 41406 — REGISTERED PROFESSIONAL ENGINEER — 5/4/20

Parametrix
ENGINEERING . PLANNING . ENVIRONMENTAL SCIENCES
719 2ND AVENUE, SUITE 200 | SEATTLE, WA 98104
P 206.394.3700
WWW.PARAMETRIX.COM

PROJECT NAME
EPHRATA LANDFILL
PHASE 3 DEVELOPMENT
GRANT COUNTY PUBLIC WORKS
EPHRATA, WASHINGTON

ELECTRICAL FLARE FACILITY PLAN

DRAWING NO. 16 OF 19
E1

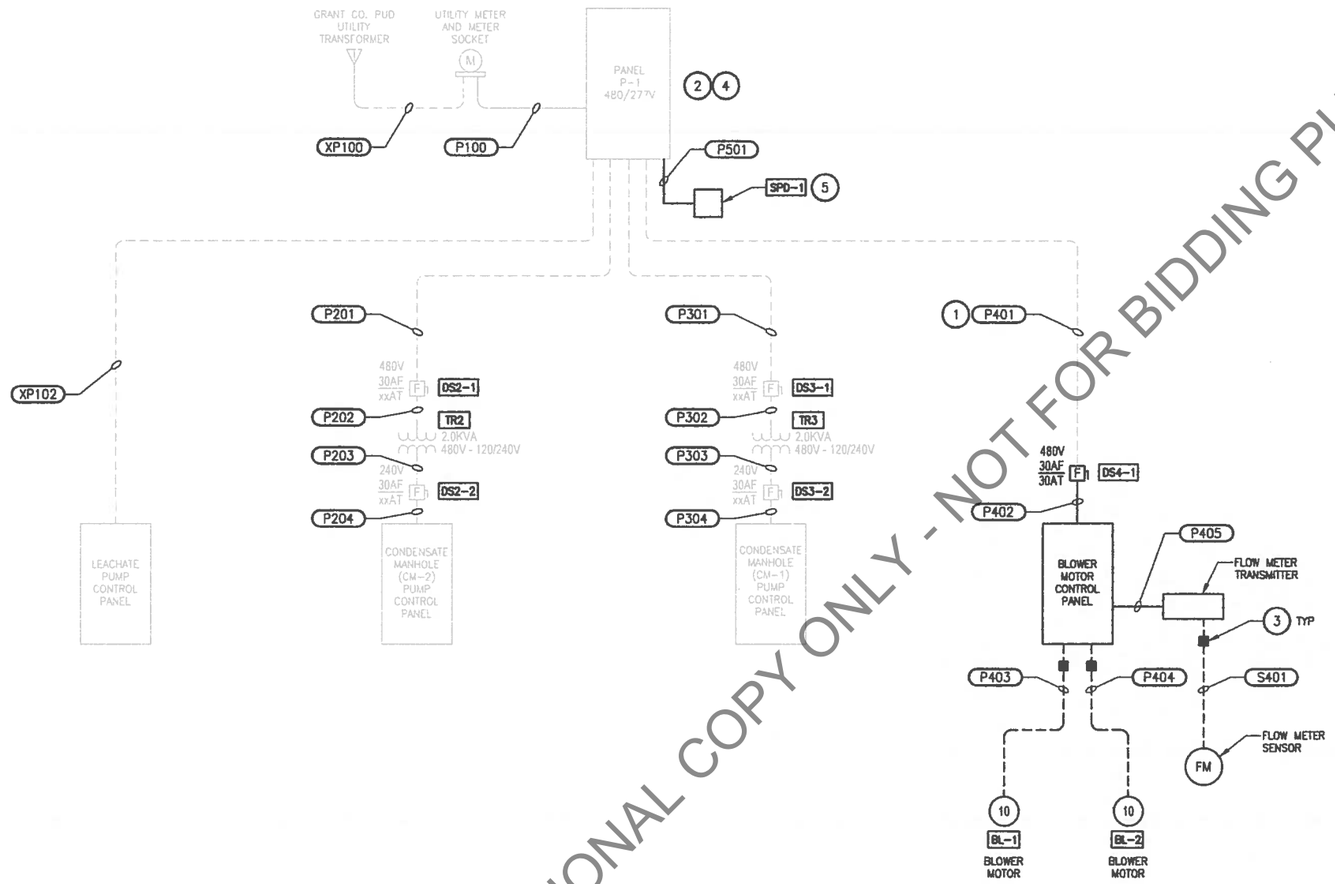

NOTES:

1. EXISTING CONDUIT. PROVIDE CONDUCTORS FROM P1 TO BLOWER MOTOR CONTROL PANEL, PER CONDUIT AND CABLE SCHEDULE. SWAB EXISTING CONDUIT TO CLEAN OUT FOREIGN OBJECTS PRIOR TO INSTALLING CONDUCTORS.
2. SEE PANELBOARD SCHEDULE, PANEL P1 FOR LOAD CALCS. UPDATE PANEL P1 DIRECTORY WITH COPY OF NEW PANEL BOARD SCHEDULE.
3. PROVIDE WIRING METHODS PER NEC 501.10 CLASS I, DIV 1.
4. PROVIDE LABELS NEXT TO EACH CIRCUIT BREAKER WITH LOAD DESCRIPTION.
5. PROVIDE SURGE PROTECTION DEVICE AS SPECIFIED. LOCATE NEAR PANEL P-1 TO KEEP CABLE LENGTH SHORT AS POSSIBLE.

INFORMATIONAL COPY ONLY - NOT FOR BIDDING PURPOSES

PATH: U:\PSO\Projects\Clients\3746-Grant Cnty\555-3746-001 Ephrata\WPSvcs\CADD\Phase 05\Task 01 PH3 Development\DWG PLOTTED BY: purgabat DATE: Monday, April 27, 2020 10:13:23 AM
LAYOUT: E2

REVISIONS	DATE	BY

DESIGNED R. ROHLER
DRAWN B. PURGANAN
CHECKED C. WITTMAN
APPROVED R. ROHLER

ONE INCH AT FULL SCALE. IF NOT, SCALE ACCORDINGLY
FILE NAME PS3746001P05T01-E2-E4
JOB No. 555-3746-001 05/01
DATE FEBRUARY 2020

ROBERT W. ROHLER STATE OF WASHINGTON 41486 REGISTERED PROFESSIONAL ENGINEER 7/1/20

Parametrix
ENGINEERING | PLANNING | ENVIRONMENTAL SCIENCES
719 2ND AVENUE, SUITE 200 | SEATTLE, WA 98104
P 206.394.3700
WWW.PARAMETRIX.COM

PROJECT NAME
EPHRATA LANDFILL
PHASE 3 DEVELOPMENT
GRANT COUNTY PUBLIC WORKS
EPHRATA, WASHINGTON

ELECTRICAL ONE-LINE DIAGRAM

DRAWING NO. 17 OF 19
E2

NOTES:

1. PROVIDE NEW CIRCUIT BREAKER FOR FEEDER TO BLOWER MOTOR CONTROL PANEL.
2. EXISTING CONDUIT. PROVIDE CABLE AS SPECIFIED.
3. PROVIDE CONDUIT AND CABLES AS SPECIFIED.
4. 50A, 3 POLE CIRCUIT BREAKER IS AN EXISTING SPARE CIRCUIT BREAKER.
5. CONTRACTOR TO ORDER MANUFACTURER'S CABLE WITH SUFFICIENT LENGTH TO ROUTE IN CONDUIT AS SHOWN ON SHEET E1 BETWEEN FLOW METER TRANSMITTER WITHOUT ANY SPLICES.

PANELBOARD SCHEDULE

v 3.0

NAME: PANEL P1

VOLTAGE RATING: 480Y/277 VOLTS, 3 PHASE, 4 WIRE
BUS RATING: 225 AMPS
MAIN BREAKER: 200 AMPS
FEED: BOTTOM
MOUNTING: SURFACE
SPECIAL FEATURES: 35KAIC, SERVICE ENTRANCE RATED

LOCATION: LANDFILL
FED FROM: GRAND COUNTY PUD UTILITY
NOTES: ENCLOSURE NEMA 4X

LOAD TYPE	CIRCUIT DESCRIPTION	VA	CKT	BRKR	L1 L2 L3	BRKR	CKT	VA	CIRCUIT DESCRIPTION	LOAD TYPE
LM	LEACHATE PUMP CONTROL PANEL	9,411	1	50 / 3	-A-	20 / 2	2	920	INFILTRATE COND. PUMP CONTROL PNL	M
LM	(25HP EXISTING LOAD)	9,411	3	50 / 3	-B-	20 / 2	4	920	"	M
LM	"	9,411	5	50 / 3	-C-	20 / 2	6	920	FLARE COND. PUMP CONTROL PNL	M
X	SURGE PROTECTION DEVICE	0	7	50 / 3	-A-	20 / 2	8	920	"	M
X	"	0	9	50 / 3	-B-	50 / 3	10	6,789	BLOWER MOTOR CONTROL PANEL	M
X	"	0	11	50 / 3	-C-	50 / 3	12	6,789	(10HP MOTOR LOAD + MISC)	M
	SPARE		13	20 / 1	-A-	50 / 3	14	6,789	"	M
	SPARE		15	20 / 2	-B-	/ 1	16		SPACE	
	"		17	20 / 2	-C-	/ 1	18		SPACE	
LINE LOADS:		18,040 VA(L1)				17,120 VA(L2)			17,120 VA(L3)	
TOTAL LOAD:		52.28 KVA				62.9 AMPS				

(4) (1)

PANEL P1 LOAD CALCULATION

		CONNECTED VA	METHOD	NEC DEMAND	CALC. VA
TOTAL LIGHTING (L) LOAD:	L	0	ALL @	125%	0
TOTAL RECEPTACLE (R) LOAD:	R	0	FIRST 10KVA @	125%	0
			REMAINDER OVER 10KVA	50%	0
TOTAL MOTOR (M) LOAD:	M	24048	ALL @	100%	24048
	LM	28233	125% OF LARGEST	125%	35291
TOTAL HVAC (H) LOAD:	H	0	ALL @	125%	0
TOTAL MISCELLANEOUS (X) LOAD:	X	0	ALL @	125%	0
TOTAL VA:		52281 VA			59340 VA
AVERAGE AMPS @		63 AMPS			71 AMPS
VOLTAGE PHASE TO PHASE=	480				

CONDUIT AND CABLE SCHEDULE

v1.0

NUMBER	CONDUIT QTY & SIZE	CONDUIT TYPE	WIRE FILL	WIRE TYPE	FROM	TO	VIA	REMARKS
XP100	(1)3"		(4)#3/0		UTILITY TRANSFORMER	UTILITY METER		INFORMATION FROM RECORD DRAWINGS
P100	(1)3"		(4)#3/0, (1)#2G		UTILITY METER	PANEL P1		INFORMATION FROM RECORD DRAWINGS
XP102	(1)1-1/4"				PANEL P1	LEACHATE PUMP CONTROL PANEL		INFORMATION FROM RECORD DRAWINGS
P201	(1)1-1/4"		(2)#8, (1)#8G		PANEL P1	DS2-1	JB-1	INFORMATION FROM RECORD DRAWINGS
P202	(1)3/4"		(2)#12, (1)#12G		DS2-1	TR2		INFORMATION FROM RECORD DRAWINGS
P203	(1)3/4"		(2)#12, (1)#12G		TR2	DS2-2		INFORMATION FROM RECORD DRAWINGS
P204	(1)1"		(2)#12, (1)#12G		DS2-2	INFILTRATE CONDESATE PUMP CONTROL PANEL		INFORMATION FROM RECORD DRAWINGS
P301	(1)1-1/4"		(2)#8, (1)#8G		PANEL P1	DS3-1	JB-1, JB-2, JB-3	INFORMATION FROM RECORD DRAWINGS
P302	(1)3/4"		(2)#12, (1)#12G		DS3-1	TR3		INFORMATION FROM RECORD DRAWINGS
P303	(1)3/4"		(2)#12, (1)#12G		TR3	DS3-2		INFORMATION FROM RECORD DRAWINGS
P304	(1)1"		(2)#12, (1)#12G		DS3-2	FLARE CONDENSATE PUMP CONTROL PANEL		INFORMATION FROM RECORD DRAWINGS
P401	(4)4"	RMC	(3)#1/0, (1)#1/0G	RHW-2	PANEL P1	DS4-1	JB-1, JB-2, JB-3	EXISTING 4" CONDUIT WITH PULL STRING, CONTRACTOR TO PROVIDE CABLE (2)
P402	(1)2"	RMC	(3)#1/0, (1)#1/0G	RHW-2	DS4-1	BLOWER MOTOR CONTROL PANEL		
P403	(1)1"	RMC	(3)#12, (1)#12G	RHW-2	BLOWER MOTOR CONTROL PANEL	BL-1	SEAL OFF	
P404	(1)1"	RMC	(3)#12, (1)#12G	RHW-2	BLOWER MOTOR CONTROL PANEL	BL-2	SEAL OFF	
P405	(1)1"	RMC	(2)#12, (1)#12G	RHW-2	BLOWER MOTOR CONTROL PANEL	FLOW METER TRANSMITTER		CONTRACTOR TO CONFIRM WIRING REQUIREMENTS BETWEEN BLOWER CONTROL PANEL AND FLOW METER TRANSMITTER (3)
S401	(1)1"	RMC	VENDOR CABLE		FLOW METER TRANSMITTER	FLOW METER SENSOR	SEAL OFF	(5)
P501	(1)1"	RMC	(4)#8, (1)#8G	RHW-2	PANEL P1	SPD-1		CABLE LENGTH SHORT AS POSSIBLE FOR SURGE PROTECTION.

INFORMATIONAL COPY ONLY - NOT FOR BIDDING PURPOSES

REVISIONS	DATE	BY

DESIGNED R. ROHLER
DRAWN B. PURGANAN
CHECKED C. WITTMAN
APPROVED R. ROHLER

ONE INCH AT FULL SCALE. IF NOT, SCALE ACCORDINGLY
FILE NAME PS3746001P05T01-E2-E4
JOB No. 555-3746-001 05/01
DATE FEBRUARY 2020

ROBERT W. ROHLER, STATE OF WASHINGTON, 41146, REGISTERED PROFESSIONAL ENGINEER 7/6/20

Parametrix
ENGINEERING . PLANNING . ENVIRONMENTAL SCIENCES
719 2ND AVENUE, SUITE 200 | SEATTLE, WA 98104
P 206.394.3700
WWW.PARAMETRIX.COM

PROJECT NAME
EPHRATA LANDFILL
PHASE 3 DEVELOPMENT
GRANT COUNTY PUBLIC WORKS
EPHRATA, WASHINGTON

ELECTRICAL SCHEDULES

DRAWING NO. 18 OF 19
E3

LAYOUT: E3 PATH: U:\PSO\Projects\Clients\3746-Grant Cnty\555-3746-001 Ephrata\05Svcs\CADD\Phase 02\Task 01 PH3 Development\DWG PLOTTED BY: purgaban DATE: Monday, April 27, 2020 10:13:28 AM

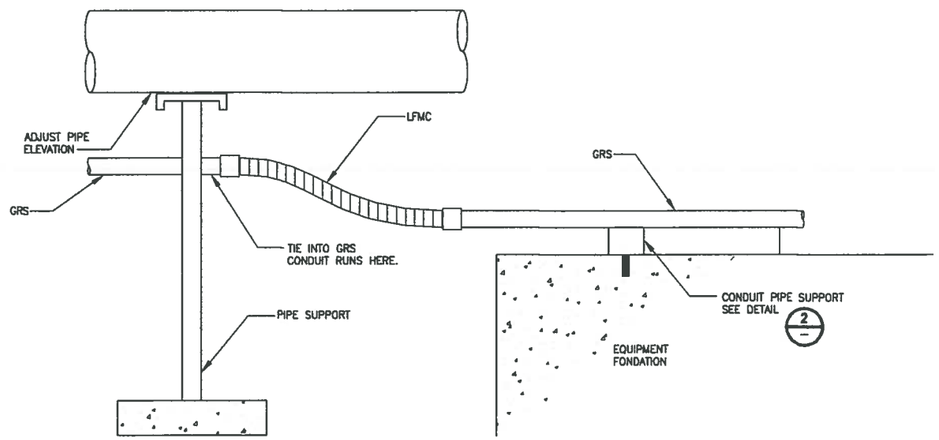

TYPICAL FOUNDATION TRANSITION
DETAIL 1
NO SCALE

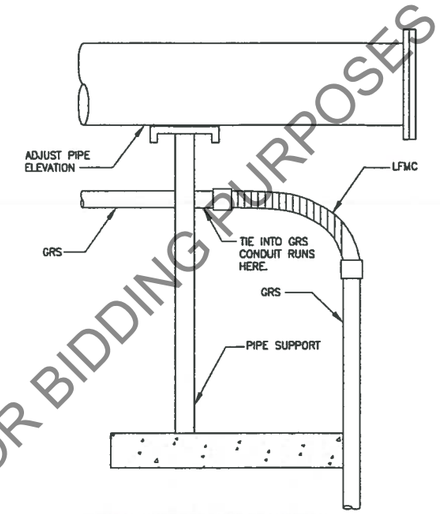

TYPICAL UNDREGROUND TRANSITION
DETAIL 2
NO SCALE E1

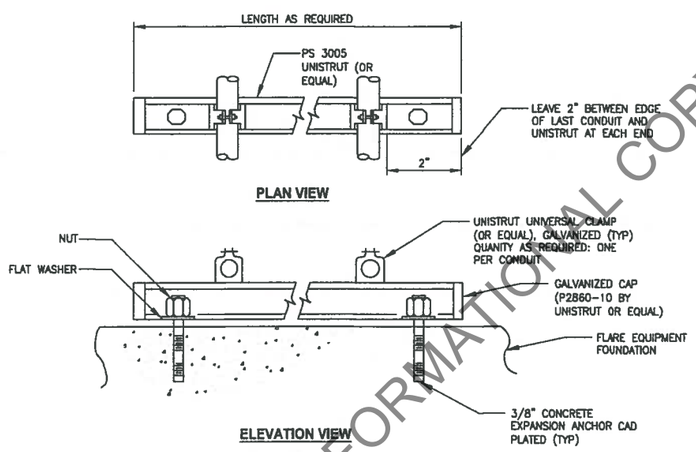

CONDUIT PIPES SUPPORT
DETAIL 3
NO SCALE E1

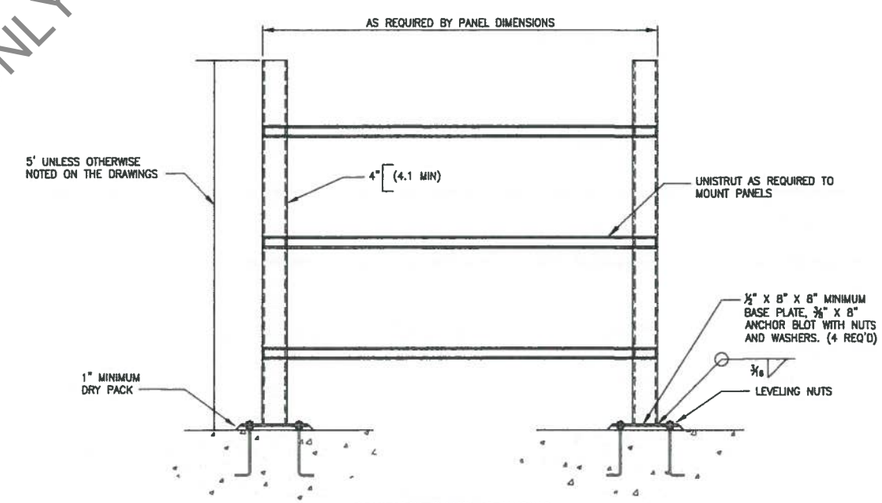

EQUIPMENT PANEL MOUNTING
DETAIL 4
NO SCALE E1

INFORMATIONAL COPY ONLY - NOT FOR BIDDING PURPOSES

	REVISIONS	DATE	BY

DESIGNED R. ROHLER
DRAWN B. PURGANAN
CHECKED C. WITTMAN
APPROVED R. ROHLER

ONE INCH AT FULL SCALE. IF NOT, SCALE ACCORDINGLY
FILE NAME PS3746001P05T01-E2-E4
JOB No. 555-3746-001 05/01
DATE FEBRUARY 2020

ROBERT W. ROHLER — STATE OF WASHINGTON — 41446 — REGISTERED PROFESSIONAL ENGINEER

Parametrix
ENGINEERING . PLANNING . ENVIRONMENTAL SCIENCES
719 2ND AVENUE, SUITE 200 | SEATTLE, WA 98104
P 206.394.3700
WWW.PARAMETRIX.COM

PROJECT NAME
EPHRATA LANDFILL
PHASE 3 DEVELOPMENT
GRANT COUNTY PUBLIC WORKS
EPHRATA, WASHINGTON

ELECTRICAL DETAILS

DRAWING NO. 19 OF 19
E4

PATH: U:\PSO\Projects\Clients\3746-Grant Cnty\555-3746-001 Ephrata\PSSvce\CADD\Phase 05\Task 01 PH3 Development\DWG PLOTTED BY: purganbut DATE: Monday, April 27, 2020 10:13:33 AM
LAYOUT: E4