GRANT COUNTY
PUBLIC WORKS DEPARTMENT

Jeff Tincher, P.E.
Director of Public Works and
County Road Engineer
Ephrata (509) 754-6082

Jerome Wawers
Assistant Director of Public Works
Ephrata (509) 754-6082

Bob Bersanti
Design/Construction Engineer
Ephrata (509) 754-6082

Jason Collings, Supervisor
Solid Waste
Ephrata (509) 754-4319

Ed Lowry
Supervisor
Road District #1
Ephrata (509) 754-6586

Mike DeTrolio, Supervisor
Road District #2
Moses Lake (509) 765-4172

John Brissey, Supervisor
Road District #3
Quincy (509) 787-2301

Andy Booth, Supervisor
Bridges
Ephrata (509) 754-6082

CONTRACT PROVISIONS and PLANS

For Construction of:

Horizontal Curve Signs, Phase 3
CRP 18-06
HSIP-000S(502)
TA-6458

Sealed Bids will be Opened on
February 19, 2019
at
1:30 P.M.
at the Office of the
Board of County Commissioners
Grant County Courthouse
P.O. Box 37
35 C Street NW, Room 207
Ephrata, Washington 98823

INFORMATIONAL COPY ONLY - NOT FOR BIDDING

NOTICE TO CONTRACTORS

Sealed bids, plainly marked **"BID FOR Horizontal Curve Signs, Phase 3, CRP 18-06"**, will be received by Grant County at the Office of the Board of County Commissioners located in the County Courthouse, P.O. Box 37, 35 C Street NW – Room 207, Ephrata, WA, 98823, until **1:30 P.M., Tuesday, February 19, 2019** and will then and there be opened and publicly read for the construction of the improvements.

All bid proposals shall be accompanied by a bid proposal deposit in cash, certified check, cashier's check, or surety bond in an amount equal to five percent (5%) of the amount of such bid proposal. No conditional bid bond will be accepted. Should the successful bidder fail to enter into such contract and furnish a satisfactory performance bond within the time stated in the specifications, the bid proposal deposit shall be forfeited to Grant County.

Maps, plans and specifications may be purchased from the office of the County Engineer, 124 Enterprise St. S.E., Ephrata, WA 98823, upon payment of the amount of $25.00 (non-refundable).

Informational copies of the maps, plans and specifications are on file for inspection at the Grant County Public Works Building, 124 Enterprise St. S.E., Ephrata, WA 98823, and in various plan centers located in Washington.

The following is applicable to federal-aid projects: The Grant County Department of Public Works in accordance with Title VI of the Civil Rights Act of 1964, 78 Stat. 252, 42 U.S.C. 2000d to 2000d-4 and Title 49, Code of Federal Regulations, Department of Transportation, subtitle A, Office of the Secretary, Part 21, Nondiscrimination in federally assisted programs of the Department of Transportation issued pursuant to such Act, hereby notifies all bidders that it will affirmatively ensure that in any contract entered into pursuant to this advertisement, disadvantaged business enterprises as defined at 49 CFR Part 26 will be afforded full opportunity to submit bids in response to this invitation and will not be discriminated against on the grounds of race, color, national origin, or sex in consideration for an award.

The Board of County Commissioners of Grant County, Washington, reserves the right to reject any and all bids. The award of this contract, if made, will be to the lowest responsible bidder.

The improvement for which bids will be received follows:

Horizontal Curve Signs, Phase 3 – CRP 18-06
This contract provides for the installation of Traffic Control Devices, County Wide, on two lane county roads in Grant County, WA, and includes removing existing signs, installation of signs, project temporary traffic control and other work, all in accordance with the attached Contract Plans, these Contract Provisions and the Standard Specifications.

INFORMATIONAL COPY ONLY - NOT FOR BIDDING

GRANT COUNTY PUBLIC WORKS

CRP 18-06

HORIZONTAL CURVE SIGNS
PHASE 3

INFORMATIONAL COPY ONLY - NOT FOR BIDDING

NOTICE TO ALL PLANHOLDERS

Grant County Department of Public Works may be contacted to answer questions regarding these bid documents and to show this project to prospective bidders at:

124 Enterprise St. S.E.
Ephrata, WA. 98823
Phone: (509)754-6082 Fax (509)754-6087

As the Engineer in direct responsible charge of developing these contract provisions, I certify these provisions have been developed or incorporated into this project under my direct supervision, or as a result of certified recommendations provided by other licensed professionals.

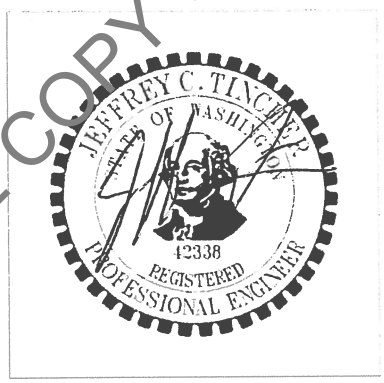

Jeffrey C. Tincher P.E. 1/23/2019
County Road Engineer Date

BIDDER'S CHECK LIST

The bidder's attention is especially called to the following forms which must be executed in full as required:

(A) PROPOSAL

The unit prices bid must be shown in the spaces provided. Show unit prices in figures only. All extensions of the unit prices must be shown in the spaces provided.

(B) PROPOSAL SIGNATURE SHEET

To be filled in and signed by the bidder.

(C) STATEMENT OF CONTRACTOR QUALIFICATIONS

To be filled in and signed by the bidder.

(D) BID BOND

This form is to be executed by the bidder and his surety company unless the bid is accompanied by cash, certified or cashier's check. The amount of this bond shall be equal to 5% of the total amount bid and may be shown in dollars or on a percentage basis.

(E) Non-Collusion Declaration (272-036N)

(F) Certification of Compliance with Wage Payment Status

(G) Underutilized Disadvantaged Business Enterprise Utilization Certification (272-056U)

(H) Underutilized Disadvantaged Business Enterprise (UDBE) Written Confirmation Document (422-031U)

The following forms are to be executed after the contract is awarded:

(I) CONTRACT

This agreement is to be executed by the successful bidder, his surety company, and Grant County.

(J) CONTRACT BOND

To be executed by the successful bidder and his surety company.

INFORMATIONAL COPY ONLY - NOT FOR BIDDING

TABLE OF CONTENTS

AMENDMENTS TO THE STANDARD SPECIFICATIONS **1**

INTRODUCTION TO THE SPECIAL PROVISIONS **55**

DIVISION 1 GENERAL REQUIREMENTS **55**

DESCRIPTION OF WORK **55**

UDBE COA GOAL **81**

DIVISION 8 ..... **105**

Proposal ..... Proposal Page 1 - 6

Contract ..... Contract Page 1 -4

Appendices

Underutilized Disadvantaged Business Enterprise (UDBE) Written Confirmation Document
Underutilized Disadvantaged Business Enterprise Utilization Certification
Title VI – Contractor Requirements
Federal Aid Provisions
Wage Rates – Federal
Wage Rates – State
Traffic Control Plan
Standard Plans
Contract Plans

INFORMATIONAL COPY ONLY - NOT FOR BIDDING

INTRODUCTION

The following Amendments and Special Provisions shall be used in conjunction with the 2018 Standard Specifications for Road, Bridge, and Municipal Construction.

AMENDMENTS TO THE STANDARD SPECIFICATIONS

The following Amendments to the Standard Specifications are made a part of this contract and supersede any conflicting provisions of the Standard Specifications. For informational purposes, the date following each Amendment title indicates the implementation date of the Amendment or the latest date of revision.

Each Amendment contains all current revisions to the applicable section of the Standard Specifications and may include references which do not apply to this particular project.

Section 1-01, Definitions and Terms
August 6, 2018

1-01.3 Definitions

The following new term and definition is inserted before the definition for "Shoulder":

Sensitive Area – Natural features, which may be previously altered by human activity, that are present on or adjacent to the project location and protected, managed, or regulated by local, tribal, state, or federal agencies.

The following new term and definition is inserted after the definition for "Working Drawings":

WSDOT Form – Forms developed and maintained by WSDOT that are required or available for use on a project. These forms can be downloaded from the forms catalogue at:

http://wsdot.wa.gov/forms/pdfForms.html

Section 1-02, Bid Procedures and Conditions
October 30, 2018

1-02.4(1) General

This section is supplemented with the following:

Prospective Bidders are advised that the Contracting Agency may include a partially completed Washington State Department of Ecology (Ecology) Transfer of Coverage (Ecology Form ECY 020-87a) for the Construction Stormwater General Permit (CSWGP) as part of the Bid Documents. When the Contracting Agency requires the transfer of coverage of the CSWGP to the Contractor, an informational copy of the Transfer of Coverage and the associated CSWGP will be included in the appendices. As a condition of Section 1-03.3, the Contractor is required to complete sections I, III, and VIII of the Transfer of Coverage and return the form to the Contracting Agency.

The Contracting Agency is responsible for compliance with the CSWGP until the end of day that the Contract is executed. Beginning on the day after the Contract is executed, the Contractor shall assume complete legal responsibility for compliance with the CSWGP and full implementation of all conditions of the CSWGP as they apply to the Contract Work.

INFORMATIONAL COPY ONLY - NOT FOR BIDDING

1-02.5 Proposal Forms

The first sentence of the first paragraph is revised to read:

> At the request of a Bidder, the Contracting Agency will provide a physical Proposal Form for any project on which the Bidder is eligible to Bid.

1-02.6 Preparation of Proposal

Item number 1 of the second paragraph is revised to read:

> 1. A unit price for each item (omitting digits more than two places to the right of the decimal point),

In the third sentence of the fourth paragraph, "WSDOT Form 422-031" is revised to read "WSDOT Form 422-031U".

The following new paragraph is inserted before the last paragraph:

> The Bidder shall submit with their Bid a completed Contractor Certification Wage Law Compliance form (WSDOT Form 272-009). Failure to return this certification as part of the Bid Proposal package will make this Bid Nonresponsive and ineligible for Award. A Contractor Certification of Wage Law Compliance form is included in the Proposal Forms.

Section 1-03, Award and Execution of Contract
January 2, 2018

1-03.3 Execution of Contract

The first paragraph is revised to read:

> Within 20 calendar days after the Award date, the successful Bidder shall return the signed Contracting Agency-prepared Contract, an insurance certification as required by Section 1-07.18, a satisfactory bond as required by law and Section 1-03.4, the Transfer of Coverage form for the Construction Stormwater General Permit with sections I, III, and VIII completed when provided, and shall be registered as a contractor in the state of Washington.

1-03.5 Failure to Execute Contract

The first sentence is revised to read:

> Failure to return the insurance certification and bond with the signed Contract as required in Section 1-03.3, or failure to provide Disadvantaged, Minority or Women's Business Enterprise information if required in the Contract, or failure or refusal to sign the Contract, or failure to register as a contractor in the state of Washington, or failure to return the completed Transfer of Coverage for the Construction Stormwater General Permit to the Contracting Agency when provided shall result in forfeiture of the proposal bond or deposit of this Bidder.

Section 1-05, Control of Work
August 6, 2018

1-05.5 Vacant

This section, including title, is revised to read:

INFORMATIONAL COPY ONLY - NOT FOR BIDDING

1-05.5 Tolerances

Geometrical tolerances shall be measured from the points, lines, and surfaces defined in Contract documents.

A plus (+) tolerance increases the amount or dimension to which it applies, or raises a deviation from level. A minus (-) tolerance decreases the amount or dimension to which it applies, or lowers a deviation from level. Where only one signed tolerance is specified (+ or -), there is no specified tolerance in the opposing direction.

Tolerances shall not be cumulative. The most restrictive tolerance shall control.

Tolerances shall not extend the Work beyond the Right of Way or other legal boundaries identified in the Contract documents. If application of tolerances causes the extension of the Work beyond the Right of Way or legal boundaries, the tolerance shall be reduced for that specific instance.

Tolerances shall not violate other Contract requirements. If application of tolerances causes the Work to violate other Contract requirements, the tolerance shall be reduced for that specific instance. If application of tolerances causes conflicts with other components or aspects of the Work, the tolerance shall be reduced for that specific instance.

1-05.9 Equipment

The following new paragraph is inserted before the first paragraph:

Prior to mobilizing equipment on site, the Contractor shall thoroughly remove all loose dirt and vegetative debris from drive mechanisms, wheels, tires, tracks, buckets and undercarriage. The Engineer will reject equipment from the site until it returns clean.

This section is supplemented with the following:

Upon completion of the Work, the Contractor shall completely remove all loose dirt and vegetative debris from equipment before removing it from the job site.

Section 1-06, Control of Material
January 7, 2019

1-06.1(3) Aggregate Source Approval (ASA) Database

This section is supplemented with the following:

Regardless of status of the source, whether listed or not listed in the ASA database the source owner may be asked to provide testing results for toxicity in accordance with Section 9-03.21(1).

1-06.2(2)D Quality Level Analysis

This section is supplemented with the following new subsection:

1-06.2(2)D5 Quality Level Calculation – HMA Compaction

The procedures for determining the quality level and pay factor for HMA compaction are as follows:

1. Determine the arithmetic mean, X_m, for compaction of the lot:

INFORMATIONAL COPY ONLY - NOT FOR BIDDING

$$X_m = \frac{\sum x}{n}$$

Where:
x = individual compaction test values for each sublot in the lot.
$\sum x$ = summation of individual compaction test values
n = total number test values

2. Compute the sample standard deviation, "S", for each constituent:

$$S = \left[\frac{n\sum x^2 - \left(\sum x\right)^2}{n(n-1)} \right]^{\frac{1}{2}}$$

Where:
$\sum x^2$ = summation of the squares of individual compaction test values
$(\sum x)^2$ = summation of the individual compaction test values squared

3. Compute the lower quality index (Q_L):

$$Q_L = \frac{X_m - LSL}{S}$$

Where:
LSL = 92.0

4. Determine P_L (the percent within the lower Specification limit which corresponds to a given Q_L) from Table 1. For negative values of Q_L, P_L is equal to 100 minus the table P_L. If the value of Q_L does not correspond exactly to a figure in the table, use the next higher value.

5. Determine the quality level (the total percent within Specification limits):

Quality Level = P_L

6. Using the quality level from step 5, determine the composite pay factor (CPF) from Table 2.

7. If the CPF determined from step 6 is 1.00 or greater: use that CPF for the compaction lot; however, the maximum HMA compaction CPF using an LSL = 92.0 shall be 1.05.

8. If the CPF from step 6 is not 1.00 or greater: repeat steps 3 through 6 using an LSL = 91.5. The value thus determined shall be the HMA compaction CPF for that lot; however, the maximum HMA compaction CPF using an LSL = 91.5 shall be 1.00.

1-06.2(2)D1 Quality Level Analysis

The following new sentence is inserted after the first sentence:

INFORMATIONAL COPY ONLY - NOT FOR BIDDING

The quality level calculations for HMA compaction are completed using the formulas in Section 1-06.2(2)D5.

1-06.2(2)D4 Quality Level Calculation

The first paragraph (excluding the numbered list) is revised to read:

The procedures for determining the quality level and pay factors for a material, other than HMA compaction, are as follows:

1-06.6 Recycled Materials

The first three sentences of the second paragraph are revised to read:

The Contractor shall submit a Recycled Material Utilization Plan on WSDOT Form 350-075A within 30 calendar days after the Contract is executed. The plan shall provide the Contractor's anticipated usage of recycled concrete aggregates for meeting the requirements of these Specifications. The quantity of recycled concrete aggregate will be provided in tons and as a percentage of the Plan quantity for eligible material listed in Section 9-03.21(1)E Table on Maximum Allowable percent (By Weight) of Recycled Material.

The last paragraph is revised to read:

Within 30 calendar days after Physical Completion, the contractor shall report the quantity of recycled concrete aggregates that were utilized in the construction of the project for each eligible item listed in Section 9-03.21(1)E. The Contractor's report shall be provided on WSDOT Form 350-075A, Recycled Materials Reporting.

1-06.6(1)A General

Item 1(a) in the second paragraph is revised to read:

a. The estimated costs for the Work for each material with 25 percent recycled concrete aggregate. The cost estimate shall include for each material a documented price quote from the supplier with the lowest total cost for the Work.

Section 1-07, Legal Relations and Responsibilities to the Public
August 6, 2018

1-07.5 Environmental Regulations

This section is supplemented with the following new subsections:

1-07.5(5) U.S. Army Corps of Engineers

When temporary fills are permitted, the Contractor shall remove fills in their entirety and the affected areas returned to pre-construction elevations.

If a U.S. Army Corps of Engineers permit is noted in Section 1-07.6 of the Special Provisions, the Contractor shall retain a copy of the permit or the verification letter (in the case of a Nationwide Permit) on the worksite for the life of the Contract. The Contractor shall provide copies of the permit or verification letter to all subcontractors involved with the authorized work prior to their commencement of any work in waters of the U.S.

INFORMATIONAL COPY ONLY - NOT FOR BIDDING

1-07.5(6) U.S. Fish/Wildlife Services and National Marine Fisheries Service

The Contracting Agency will provide fish exclusion and handling services if the Work dictates. However, if the Contractor discovers any fish stranded by the project and a Contracting Agency biologist is not available, they shall immediately release the fish into a flowing stream or open water.

1-07.5(1) General

The first sentence is deleted and replaced with the following:

No Work shall occur within areas under the jurisdiction of resource agencies unless authorized in the Contract.

The third paragraph is deleted.

1-07.5(2) State Department of Fish and Wildlife

This section is revised to read:

In doing the Work, the Contractor shall:

1. Not degrade water in a way that would harm fish, wildlife, or their habitat.
2. Not place materials below or remove them from the ordinary high water line except as may be specified in the Contract.
3. Not allow equipment to enter waters of the State except as specified in the Contract.
4. Revegetate in accordance with the Plans, unless the Special Provisions permit otherwise.
5. Prevent any fish-threatening silt buildup on the bed or bottom of any body of water.
6. Ensure continuous stream flow downstream of the Work area.
7. Dispose of any project debris by removal, burning, or placement above high-water flows.
8. Immediately notify the Engineer and stop all work causing impacts, if at any time, as a result of project activities, fish are observed in distress or a fish kill occurs.

If the Work in (1) through (3) above differs little from what the Contract requires, the Contracting Agency will measure and pay for it at unit Contract prices. But if Contract items do not cover those areas, the Contracting Agency will pay pursuant to Section 1-09.4. Work in (4) through (8) above shall be incidental to Contract pay items.

1-07.5(3) State Department of Ecology

This section is revised to read:

In doing the Work, the Contractor shall:

1. Comply with Washington State Water Quality Standards.

INFORMATIONAL COPY ONLY - NOT FOR BIDDING

2. Perform Work in such a manner that all materials and substances not specifically identified in the Contract documents to be placed in the water do not enter waters of the State, including wetlands. These include, but are not limited to, petroleum products, hydraulic fluid, fresh concrete, concrete wastewater, process wastewater, slurry materials and waste from shaft drilling, sediments, sediment-laden water, chemicals, paint, solvents, or other toxic or deleterious materials.

3. Use equipment that is free of external petroleum-based products.

4. Remove accumulations of soil and debris from drive mechanisms (wheels, tracks, tires) and undercarriage of equipment prior to using equipment below the ordinary high water line.

5. Clean loose dirt and debris from all materials placed below the ordinary high water line. No materials shall be placed below the ordinary high water line without the Engineer's concurrence.

6. When a violation of the Construction Stormwater General Permit (CSWGP) occurs, immediately notify the Engineer and fill out WSDOT Form 422-011, Contractor ECAP Report, and submit the form to the Engineer within 48 hours of the violation.

7. Once Physical Completion has been given, prepare a Notice of Termination (Ecology Form ECY 020-87) and submit the Notice of Termination electronically to the Engineer in a PDF format a minimum of 7 calendar days prior to submitting the Notice of Termination to Ecology.

8. Transfer the CSWGP coverage to the Contracting Agency when Physical Completion has been given and the Engineer has determined that the project site is not stabilized from erosion.

9. Submit copies of all correspondence with Ecology electronically to the Engineer in a PDF format within four calendar days.

1-07.5(4) Air Quality

This section is revised to read:

The Contractor shall comply with all regional clean air authority and/or State Department of Ecology rules and regulations.

The air quality permit process may include additional State Environment Policy Act (SEPA) requirements. Contractors shall contact the appropriate regional air pollution control authority well in advance of beginning Work.

When the Work includes demolition or renovation of any existing facility or structure that contains Asbestos Containing Material (ACM) and/or Presumed Asbestos-Containing Material (PACM), the Contractor shall comply with the National Emission Standards for Hazardous Air Pollutants (NESHAP).

Any requirements included in Federal and State regulations regarding air quality that applies to the "owner or operator" shall be the responsibility of the Contractor.

1-07.7(1) General

The first sentence of the third paragraph is revised to read:

INFORMATIONAL COPY ONLY - NOT FOR BIDDING

When the Contractor moves equipment or materials on or over Structures, culverts or pipes, the Contractor may operate equipment with only the load-limit restrictions in Section 1-07.7(2).

The first sentence of the last paragraph is revised to read:

Unit prices shall cover all costs for operating over Structures, culverts and pipes.

1-07.9(1) General

The last sentence of the sixth paragraph is revised to read:

Generally, the Contractor initiates the request by preparing standard form 1444 Request for Authorization of Additional Classification and Rate, available at https://www.dol.gov/whd/recovery/dbsurvey/conformance.htm, and submitting it to the Engineer for further action.

1-07.9(2) Posting Notices

The second sentence of the first paragraph (up until the colon) is revised to read:

The Contractor shall ensure the most current edition of the following are posted:

In items 1 through 10, the revision dates are deleted.

1-07.11(2) Contractual Requirements

In this section, "creed" is revised to read "religion".

Item numbers 1 through 9 are revised to read 2 through 10, respectively.

After the preceding Amendment is applied, the following new item number 1 is inserted:

1. The Contractor shall maintain a Work site that is free of harassment, humiliation, fear, hostility and intimidation at all times. Behaviors that violate this requirement include but are not limited to:

   a. Persistent conduct that is offensive and unwelcome.

   b. Conduct that is considered to be hazing.

   c. Jokes about race, gender, or sexuality that are offensive.

   d. Unwelcome, unwanted, rude or offensive conduct or advances of a sexual nature which interferes with a person's ability to perform their job or creates an intimidating, hostile, or offensive work environment.

   e. Language or conduct that is offensive, threatening, intimidating or hostile based on race, gender, or sexual orientation.

   f. Repeating rumors about individuals in the Work Site that are considered to be harassing or harmful to the individual's reputation.

1-07.11(5) Sanctions

This section is supplemented with the following:

INFORMATIONAL COPY ONLY - NOT FOR BIDDING

Immediately upon the Engineer's request, the Contractor shall remove from the Work site any employee engaging in behaviors that promote harassment, humiliation, fear or intimidation including but not limited to those described in these specifications.

1-07.11(6) Incorporation of Provisions

The first sentence is revised to read:

The Contractor shall include the provisions of Section 1-07.11(2) Contractual Requirements (1) through (5) and the Section 1-07.11(5) Sanctions in every subcontract including procurement of materials and leases of equipment.

1-07.15(1) Spill Prevention, Control, and Countermeasures Plan

The last sentence of the first paragraph is revised to read:

An SPCC Plan template and guidance information is available at http://www.wsdot.wa.gov/environment/technical/disciplines/hazardous-materials/spill-prevent-report.

1-07.18 Public Liability and Property Damage Insurance

Item number 1 is supplemented with the following new sentence:

This policy shall be kept in force from the execution date of the Contract until the Physical Completion Date.

Section 1-08, Prosecution and ProgressJanuary 7, 2019

1-08.1 Subcontracting

The first sentence of the seventh paragraph is revised to read:

All Work that is not performed by the Contractor will be considered as subcontracting except: (1) purchase of sand, gravel, crushed stone, crushed slag, batched concrete aggregates, ready-mix concrete, off-site fabricated structural steel, other off-site fabricated items, and any other materials supplied by established and recognized commercial plants; or (2) delivery of these materials to the Work site in vehicles owned or operated by such plants or by recognized independent or commercial hauling companies hired by those commercial plants.

The following new paragraph is inserted after the seventh paragraph:

The Contractor shall not use businesses (material suppliers, vendors, subcontractors, etc.) with federal purchasing exclusions. Businesses with exclusions are identified using the System for Award Management web page at www.SAM.gov.

1-08.5 Time for Completion

Item number 2 of the sixth paragraph is supplemented with the following:

f. A copy of the Notice of Termination sent to the Washington State Department of Ecology (Ecology); the elapse of 30 calendar days from the date of receipt of the Notice of Termination by Ecology; and no rejection of the Notice of Termination by Ecology. This requirement will not apply if the Construction Stormwater General Permit is transferred back to the Contracting Agency in accordance with Section 8-01.3(16).

INFORMATIONAL COPY ONLY - NOT FOR BIDDING

1-08.7 Maintenance During Suspension

The fifth paragraph is revised to read:

> The Contractor shall protect and maintain all other Work in areas not used by traffic. All costs associated with protecting and maintaining such Work shall be the responsibility of the Contractor.

Section 1-09, Measurement and Payment
August 6, 2018

1-09.2(1) General Requirements for Weighing Equipment

The last paragraph is supplemented with the following:

> When requested by the Engineer, the Contractor's representative shall collect the tickets throughout the day and provide them to the Engineer's designated receiver, not later than the end of shift, for reconciliation. Tickets for loads not verified as delivered will receive no pay.

1-09.2(2) Specific Requirements for Batching Scales

The last sentence of the first paragraph is revised to read:

> Batching scales used for concrete or hot mix asphalt shall not be used for batching other materials.

1-09.10 Payment for Surplus Processed Materials

The following sentence is inserted after the first sentence of the second paragraph:

> For Hot Mix Asphalt, the Plan quantity and quantity used will be adjusted for the quantity of Asphalt and quantity of RAP or other materials incorporated into the mix.

Section 2-09, Structure Excavation
April 2, 2018

2-09.2 Materials

In the first paragraph the references to "Portland Cement" and "Aggregates for Portland Cement Concrete" are revised to read:

Cement	9-01
Fine Aggregate for Concrete	9-03.1(2)

2-09.3(3)D Shoring and Cofferdams

The first sentence of the sixth paragraph is revised to read:

> Structural shoring and cofferdams shall be designed for conditions stated in this Section using methods shown in Division I Section 5 of the AASHTO *Standard Specifications for Highway Bridges* Seventeenth Edition – 2002 for allowable stress design, or the AASHTO *LRFD Bridge Design Specifications* for load and resistance factor design.

INFORMATIONAL COPY ONLY - NOT FOR BIDDING

Section 6-02, Concrete Structures
January 7, 2019

6-02.1 Description
The first sentence is revised to read:

This Work consists of the construction of all Structures (and their parts) made of portland cement or blended hydraulic cement concrete with or without reinforcement, including bridge approach slabs.

6-02.2 Materials
In the first paragraph, the references to "Portland Cement" and "Aggregates for Portland Cement Concrete" are revised to read:

Cement	9-01
Aggregates for Concrete	9-03.1

6-02.3(2) Proportioning Materials
The second paragraph is revised to read:

Unless otherwise specified, the Contractor shall use Type I or II portland cement or blended hydraulic cement in all concrete as defined in Section 9-01.2(1).

6-02.3(2)A Contractor Mix Design
The last sentence of the last paragraph is revised to read:

For all other concrete, air content shall be a minimum of 4.5 percent and a maximum of 7.5 percent for all concrete placed above the finished ground line unless noted otherwise.

6-02.3(2)A1 Contractor Mix Design for Concrete Class 4000D
Item number 5 of the first paragraph is deleted.

Item number 6 of the first paragraph (after the preceding Amendment is applied) is renumbered to 5.

6-02.3(2)B Commercial Concrete
The second paragraph is revised to read:

Where concrete Class 3000 is specified for items such as, culvert headwalls, plugging culverts, concrete pipe collars, pipe anchors, monument cases, Type PPB, PS, I, FB and RM signal standards, pedestals, cabinet bases, guardrail anchors, fence post footings, sidewalks, concrete curbs, curbs and gutters, and gutters, the Contractor may use commercial concrete. If commercial concrete is used for sidewalks, concrete curbs, curbs and gutters, and gutters, it shall have a minimum cementitious material content of 564 pounds per cubic yard of concrete, shall be air entrained, and the tolerances of Section 6-02.3(5)C shall apply.

6-02.3(4) Ready-Mix Concrete
The first sentence of the first paragraph is revised to read:

All concrete, except lean concrete, shall be batched in a prequalified manual, semi-automatic, or automatic plant as described in Section 6-02.3(4)A.

INFORMATIONAL COPY ONLY - NOT FOR BIDDING

6-02.3(4)D Temperature and Time For Placement

The following is inserted after the first sentence of the first paragraph:

> The upper temperature limit for placement for Class 4000D concrete may be increased to a maximum of 80°F if allowed by the Engineer.

6-02.3(5)C Conformance to Mix Design

Item number 1 of the second paragraph is revised to read:

> 1. Cement weight plus 5 percent or minus 1 percent of that specified in the mix design.

6-02.3(6)A1 Hot Weather Protection

The first paragraph is revised to read:

> The Contractor shall provide concrete within the specified temperature limits. Cooling of the coarse aggregate piles by sprinkling with water is permitted provided the moisture content is monitored, the mixing water is adjusted for the free water in the aggregate and the coarse aggregate is removed from at least 1 foot above the bottom of the pile. Sprinkling of fine aggregate piles with water is not allowed. Refrigerating mixing water or replacing all or part of the mixing water with crushed ice is permitted, provided the ice is completely melted by placing time.

The second sentence of the second paragraph is revised to read:

> These surfaces include forms, reinforcing steel, steel beam flanges, and any others that touch the concrete.

6-02.3(7) Vacant

This section, including title, is revised to read:

> **6-02.3(7) Tolerances**
>
> Unless noted otherwise, concrete construction tolerances shall be in accordance with this section. Tolerances in this section do not apply to cement concrete pavement.
>
> Horizontal deviation of roadway crown points, cross-slope break points, and curb, barrier or railing edges from alignment or work line: ±1.0 inch
>
> Deviation from plane: ±0.5 inch in 10 feet
>
> Deviation from plane for roadway surfaces: ±0.25 inch in 10 feet
>
> Deviation from plumb or specified batter: ±0.5 inch in 10 feet, but not to exceed a total of ±1.5 inches
>
> Vertical deviation from profile grade for roadway surfaces: ±1 inch
>
> Vertical deviation of top surfaces (except roadway surfaces): ±0.75 inch
>
> Thickness of bridge decks and other structural slabs not at grade: ±0.25 inch
>
> Length, width and thickness of elements such as columns, beams, crossbeams, diaphragms, corbels, piers, abutments and walls, including dimensions to construction joints in initial placements: +0.5 inch, -0.25 inch

INFORMATIONAL COPY ONLY - NOT FOR BIDDING

Length, width and thickness of spread footing foundations: +2 inches, -0.5 inch

Horizontal location of the as-placed edge of spread footing foundations: The greater of ±2% of the horizontal dimension of the foundation perpendicular to the edge and ±0.5 inch. However, the tolerance shall not exceed ±2 inches.

Location of opening, insert or embedded item at concrete surface: ±0.5 inch

Cross-sectional dimensions of opening: ±0.5 inch

Bridge deck, bridge approach slab, and bridge traffic barrier expansion joint gaps with a specified temperature range, measured at a stable temperature: ±0.25 inch

Horizontal deviation of centerline of bearing pad, oak block or other bearing assembly: ±0.125 inch

Horizontal deviation of centerline of supported element from centerline of bearing pad, oak block or other bearing assembly ±0.25 inch

Vertical deviation of top of bearing pad, oak block or other bearing assembly: ±0.125 inch

6-02.3(10)C Finishing Equipment

The first paragraph is revised to read:

The finishing machine shall be self-propelled and be capable of forward and reverse movement under positive control. The finishing machine shall be equipped with augers and a rotating cylindrical single or double drum screed. The finishing machine shall have the necessary adjustments to produce the required cross section, line, and grade. The finishing machine shall be capable of raising the screeds, augers, and any other parts of the finishing mechanical operation to clear the screeded surface, and returning to the specified grade under positive control. Unless otherwise allowed by the Engineer, a finishing machine manufacturer technical representative shall be on site to assist the first use of the machine on the Contract.

The first sentence of the second paragraph is revised to read:

For bridge deck widening of 20 feet or less, and for bridge approach slabs, or where jobsite conditions do not allow the use of the conventional configuration finishing machines, or modified conventional machines as described above; the Contractor may submit a Type 2 Working Drawing proposing the use of a hand-operated motorized power screed such as a "Texas" or "Bunyan" screed.

6-02.3(10)D4 Monitoring Bridge Deck Concrete Temperature After Placement

This section, including title, is revised to read:

6-02.3(10)D4 Vacant

6-02.3(10)D5 Bridge Deck Concrete Finishing and Texturing

In the third subparagraph of the first paragraph, the last sentence is revised to read:

The Contractor shall texture the bridge deck surface to within 3-inches minimum and 24-inches maximum of the edge of concrete at expansion joints, within 1-foot minimum and 2-

INFORMATIONAL COPY ONLY - NOT FOR BIDDING

feet maximum of the curb line, and within 3-inches minimum and 9-inches maximum of the perimeter of bridge drain assemblies.

6-02.3(10)F Bridge Approach Slab Orientation and Anchors

The second to last paragraph is revised to read:

> The compression seal shall be a 2½ inch wide gland and shall conform to Section 9-04.1(4).

The last paragraph is deleted.

6-02.3(13)A Strip Seal Expansion Joint System

In item number 3 of the third paragraph, "Federal Standard 595" is revised to read "SAE AMS Standard 595".

6-02.3(13)B Compression Seal Expansion Joint System

The first paragraph is revised to read:

> Compression seal glands shall conform to Section 9-04.1(4) and be sized as shown in the Plans.

6-02.3(14)C Pigmented Sealer for Concrete Surfaces

This section is supplemented with the following new paragraph:

> Pigmented Sealer Materials shall be a product listed in the current WSDOT Qualified Products List (QPL). If the pigmented sealer material is not listed in the current WSDOT QPL, a sample shall be submitted to the State Materials Laboratory in Tumwater for evaluation and acceptance in accordance with Section 9-08.3.

6-02.3(20) Grout for Anchor Bolts and Bridge Bearings

The second, third and fourth paragraphs are revised to read:

> Grout shall be a workable mix with a viscosity that is suitable for the intended application. Grout shall not be placed outside of the manufacturer recommended range of thickness. The Contractor shall receive concurrence from the Engineer before using the grout.
>
> Field grout cubes and cylinders shall be fabricated and tested in accordance with Section 9-20.3 when requested by the Engineer, but not less than once per bridge pier or once per day.
>
> Before placing grout, the substrate on which it is to be placed shall be prepared as recommended by the manufacturer to ensure proper bonding. The grout shall be cured as recommended by the manufacturer. The grout may be loaded when a minimum of 4,000 psi compressive strength is attained.

The fifth paragraph is deleted.

6-02.3(23) Opening to Traffic

This section is supplemented with the following new paragraph:

> After curing bridge approach slabs in accordance with Section 6-02.3(11), the bridge approach slabs may be opened to traffic when a minimum compressive strength of 2,500 psi is achieved.

INFORMATIONAL COPY ONLY - NOT FOR BIDDING

6-02.3(24)C Placing and Fastening

This section is revised to read:

The Contractor shall position reinforcing steel as the Plans require and shall ensure that the steel is set within specified tolerances. Adjustments to reinforcing details outside of specified tolerances to avoid interferences and for other purposes are acceptable when approved by the Engineer.

When spacing between bars is 1 foot or more, they shall be tied at all intersections. When spacing is less than 1 foot, every other intersection shall be tied. If the Plans require bundled bars, they shall be tied together with wires at least every 6 feet. All epoxy-coated bars in the top mat of the bridge deck shall be tied at all intersections, however they may be tied at alternate intersections when spacing is less than 1 foot in each direction and they are supported by continuous supports meeting all other requirements of supports for epoxy-coated bars. Other epoxy-coated bars shall also be tied at all intersections, but shall be tied at alternate intersections when spacing is less than 1 foot in each direction. Wire used for tying epoxy-coated reinforcing steel shall be plastic coated. **Tack welding is not permitted on reinforcing steel**.

Abrupt bends in the steel are permitted only when one steel member bends around another. Vertical stirrups shall pass around main reinforcement or be firmly attached to it.

For slip-formed concrete, the reinforcing steel bars shall be tied at all intersections and cross braced to keep the cage from moving during concrete placement. Cross bracing shall be with additional reinforcing steel. Cross bracing shall be placed both longitudinally and transversely.

After reinforcing steel bars are placed in a traffic or pedestrian barrier and prior to slip-form concrete placement, the Contractor shall check clearances and reinforcing steel bar placement. This check shall be accomplished by using a template or by operating the slip-form machine over the entire length of the traffic or pedestrian barrier. All clearance and reinforcing steel bar placement deficiencies shall be corrected by the Contractor before slip-form concrete placement.

Precast concrete supports (or other accepted devices) shall be used to maintain the concrete coverage required by the Plans. The precast concrete supports shall:

1. Have a bearing surface measuring not greater than 2 inches in either dimension, and
2. Have a compressive strength equal to or greater than that of the concrete in which they are embedded.

In slabs, each precast concrete support shall have either: (1) a grooved top that will hold the reinforcing bar in place, or (2) an embedded wire that protrudes and is tied to the reinforcing steel. If this wire is used around epoxy-coated bars, it shall be coated with plastic.

Precast concrete supports may be accepted based on a Manufacturer's Certificate of Compliance.

In lieu of precast concrete supports, the Contractor may use metal or all-plastic supports to hold uncoated bars. Any surface of a metal support that will not be covered by at least ½ inch of concrete shall be one of the following:

INFORMATIONAL COPY ONLY - NOT FOR BIDDING

1. Hot-dip galvanized after fabrication in keeping with AASHTO M232 Class D;

2. Coated with plastic firmly bonded to the metal. This plastic shall be at least 3⁄32 inch thick where it touches the form and shall not react chemically with the concrete when tested in the State Materials Laboratory. The plastic shall not shatter or crack at or above -5°F and shall not deform enough to expose the metal at or below 200°F; or

3. Stainless steel that meet the requirements of ASTM A493, Type 302. Stainless steel chair supports are not required to be galvanized or plastic coated.

In lieu of precast concrete supports, epoxy-coated reinforcing bars may be supported by one of the following:

1. Metal supports coated entirely with a dielectric material such as epoxy or plastic,

2. Other epoxy-coated reinforcing bars, or

3. All-plastic supports.

Damaged coatings on metal bar supports shall be repaired prior to placing concrete.

All-plastic supports shall be lightweight, non-porous, and chemically inert in concrete. All-plastic supports shall have rounded seatings, shall not deform under load during normal temperatures, and shall not shatter or crack under impact loading in cold weather. All-plastic supports shall be placed at spacings greater than 1 foot along the bar and shall have at least 25 percent of their gross place area perforated to compensate for the difference in the coefficient of thermal expansion between plastic and concrete. The shape and configuration of all-plastic supports shall permit complete concrete consolidation in and around the support.

A "mat" is two adjacent and perpendicular layers of reinforcing steel. In bridge decks, top and bottom mats shall be supported adequately enough to hold both in their proper positions. If bar supports directly support, or are directly supported on No. 4 bars, they shall be spaced at not more than 3-foot intervals (or not more than 4-foot intervals for bars No. 5 and larger). Wire ties to girder stirrups shall not be considered as supports. To provide a rigid mat, the Contractor shall add other supports and tie wires to the top mat as needed.

Unless noted otherwise, the minimum concrete cover for main reinforcing bars shall be:

3 inches to a concrete surface deposited against earth without intervening forms.

2½ inches to the top surface of a concrete bridge deck or bridge approach slab.

2 inches to a concrete surface when not specified otherwise in this section or in the Contract documents.

1½ inches to a concrete barrier or curb surface.

Except for top cover in bridge decks and bridge approach slabs, minimum concrete cover to ties and stirrups may be reduced by ½ inch but shall not be less than 1 inch. Minimum concrete cover shall also be provided to the outermost part of mechanical splices and headed steel reinforcing bars.

INFORMATIONAL COPY ONLY - NOT FOR BIDDING

Reinforcing steel bar location, concrete cover and clearance shall not vary more than the following tolerances from what is specified in the Contract documents:

Reinforcing bar location for members 12 inches or less in thickness: ±0.25 inch

Reinforcing bar location for members greater than 12 inches in thickness: ±0.375 inch

Reinforcing bar location for bars placed at equal spacing within a plane: the greater of either ±1 inch or ±1 bar diameter within the plane. The total number of bars shall not be fewer than that specified.

The clearance between reinforcement shall not be less than the greater of the bar diameter or 1 inch for unbundled bars. For bundled bars, the clearance between bundles shall not be less than the greater of 1 inch or a bar diameter derived from the equivalent total area of all bars in the bundle.

Longitudinal location of bends and ends of bars: ±1 inch

Embedded length of bars and length of bar lap splices:

No. 3 through No. 11: -1 inch

No. 14 through No. 18: -2 inches

Concrete cover measured perpendicular to concrete surface (except for the top surface of bridge decks, bridge approach slabs and other roadway surfaces): ±0.25 inch

Concrete cover measured perpendicular to concrete surface for the top surface of bridge decks, bridge approach slabs and other roadway surfaces: +0.25 inch, -0 inch

Before placing any concrete, the Contractor shall:

1. Clean all mortar from reinforcement, and

2. Obtain the Engineer's permission to place concrete after the Engineer has inspected the placement of the reinforcing steel. (Any concrete placed without the Engineer's permission shall be rejected and removed.)

6-02.3(25)H Finishing

The last paragraph is revised to read:

The Contractor may repair defects in prestressed concrete girders in accordance with Section 6-01.16.

6-02.3(25)I Fabrication Tolerances

Item number 12 of the first paragraph is revised to read:

12. Stirrup Projection from Top of Girder:

Wide flange thin deck and slab girders: ± ½ inch

All other girders: ± ¾ inch

INFORMATIONAL COPY ONLY - NOT FOR BIDDING

6-02.3(27) Concrete for Precast Units

The last sentence of the first paragraph is revised to read:

> Type III portland cement or blended hydraulic cement is permitted to be used in precast concrete units.

6-02.3(28)B Casting

In the second paragraph, the reference to Section 6-02.3(25)B is revised to read Section 6-02.3(25)C.

6-02.3(28)D Contractors Control Strength

In the first paragraph, "WSDOT FOP for AASHTO T 23" is revised to read "FOP for AASHTO T 23".

6-02.3(28)E Finishing

This section is supplemented with the following:

> The Contractor may repair defects in precast panels in accordance with Section 6-01.16.

Section 6-03, Steel Structures
January 7, 2019

6-03.2 Materials

In the first paragraph, the material reference for Paints is revised to read:

> Paints and Related Materials 9-08

6-03.3(25)A3 Ultrasonic Inspection

The first paragraph (up until the colon) is revised to read:

> Complete penetration groove welds on plates 5/16 inch and thicker in the following welded assemblies or Structures shall be 100 percent ultrasonically inspected:

6-03.3(33) Bolted Connections

The first paragraph is supplemented with the following:

> After final tightening of the fastener components, the threads of the bolts shall at a minimum be flush with the end of the nut.

The following is inserted after the third sentence of the fourth paragraph:

> When galvanized bolts are specified, tension-control galvanized bolts are not permitted.

Section 6-07, Painting
January 7, 2019

6-07.1 Description

The first sentence is revised to read:

INFORMATIONAL COPY ONLY - NOT FOR BIDDING

This work consists of containment, surface preparation, shielding adjacent areas from work, testing and disposing of debris, furnishing and applying paint, and cleaning up after painting is completed.

6-07.2 Materials

The material reference for Paint is revised to read:

Paint and Related Materials 9-08

6-07.3(1)A Work Force Qualifications for Shop Application of Paint

This section is supplemented with the following new sentence:

The work force may be accepted based on the approved facility.

6-07.3(1)B Work Force Qualifications for Field Application of Paint

The first two paragraphs are revised to read:

The Contractor preparing the surface and applying the paint shall be certified under SSPC QP 1 or NACE International Institute Contractor Accreditation Program (NIICAP) AS 1.

The Contractor removing and otherwise disturbing existing paint containing lead and other hazardous materials shall be certified under SSPC-QP 2, Category A or NIICAP AS 2.

The third paragraph (up until the colon) is revised to read:

In lieu of the above SSPC or NIICAP certifications, the Contractor performing the specified work shall complete both of the following actions:

Item number 2 of the third paragraph is revised to read:

2. The Contractor's quality control inspector(s) for the project shall be NACE-certified CIP Level 3 or SSPC Protective Coating Inspector (PCI) Level 3.

6-07.3(2) Submittals

The first paragraph is supplemented with the following:

Each component of the plan shall identify the specification section it represents.

6-07.3(2)B Contractor's Quality Control Program Submittal Component

The numbered list in the first paragraph is revised to read:

1. Description of the inspection procedures, tools, techniques and the acceptance criteria for all phases of work.

2. Procedure for implementation of corrective action for non-conformance work.

3. The paint system manufacturer's recommended methods of preventing defects.

4. The Contractor's frequency of quality control inspection for each phase of work.

5. Example of each completed form(s) of the daily quality control report used to document the inspection work and tests performed by the Contractor's quality control personnel.

INFORMATIONAL COPY ONLY - NOT FOR BIDDING

6-07.3(2)C Paint System Manufacturer and Paint System Information Submittal Component

Item number 1 is revised to read:

1. Product data sheets and Safety Data Sheets (SDS) on the paint materials, paint preparation, and paint application, as specified by the paint manufacturer, including:

    a. All application instructions, including the mixing and thinning directions.

    b. Recommended spray nozzles and pressures.

    c. Minimum and maximum drying time between coats.

    d. Restrictions on temperature and humidity.

    e. Repair procedures for shop and field applied coatings.

    f. Maximum dry film thickness for each coat.

    g. Minimum wet film thickness for each coat to achieve the specified minimum dry film thickness.

6-07.3(2)D Hazardous Waste Containment, Collection, Testing, and Disposal Submittal Component

The first paragraph (up until the colon) is revised to read:

The hazardous waste containment, collection, testing, and disposal shall meet all Federal and State requirements, and the submittal component of the painting plan shall include the following:

6-07.3(2)E Cleaning and Surface Preparation Submittal Component

Item 1(b) of the first paragraph is revised to read::

b. Type, manufacturer, and brand of abrasive blast material and all associated additives, including Safety Data Sheets (SDS).

6-07.3(3)B Quality Control and Quality Assurance for Field Application of Paint

The last sentence of the first paragraph (excluding the numbered list) is revised to read:

The Contractor's quality control operations shall include a minimum monitoring and documenting the following for each working day:

Item number 1 in the fourth paragraph is revised to read:

1. Environmental conditions for painting in accordance with ASTM E 337.

Item number 4 in the fourth paragraph is revised to read:

4. Pictorial of surface preparation guides in accordance with SSPC-VIS 1, 3, 4, and 5.

Item number 5 in the fourth paragraph is revised to read:

INFORMATIONAL COPY ONLY NOT FOR BIDDING

5. Surface profile by Keanne-Tator comparator in accordance with ASTM D 4417 and SSPC PA17.

6-07.3(4) Paint System Manufacturer's Technical Representative

This section is revised to read:

The paint system manufacturer's representative shall be present at the jobsite for the pre-painting conference and for the first day of paint application, and shall be available to the Contractor and Contracting Agency for consultation for the full project duration.

6-07.3(5) Pre-Painting Conference

The second paragraph is revised to read:

If the Contractor's key personnel change between any work operations, an additional conference shall be held if requested by the Engineer.

6-07.3(6)A Paint Containers

In item number 2 of the first paragraph, "Federal Standard 595" is revised to read "SAE AMS Standard 595".

6-07.3(6)B Paint Storage

Item number 2 of the second paragraph is revised to read:

2. The Contractor shall monitor and document daily the paint material storage facility with a high-low recording thermometer device.

6-07.3(7) Paint Sampling and Testing

The first two paragraphs are revised to read:

The Contractor shall provide the Engineer 1 quart of each paint representing each lot. Samples shall be accompanied with a Safety Data Sheet.

If the quantity of paint required for each component of the paint system for the entire project is 20 gallons or less, then the paint system components will be accepted as specified in Section 9-08.1(7).

6-07.3(8)A Paint Film Thickness Measurement Gages

The first paragraph is revised to read:

Paint dry film thickness measurements shall be performed with either a Type 1 pull-off gage or a Type 2 electronic gage as specified in SSPC Paint Application Specification No. 2, Procedure for Determining Conformance to Dry Coating Thickness Requirements.

6-07.3(9) Painting New Steel Structures

The last sentence of the second paragraph is revised to read:

Welded shear connectors are not required to painted.

The last paragraph is revised to read:

Temporary attachments or supports for scaffolding, containment or forms shall not damage the paint system.

INFORMATIONAL COPY ONLY - NOT FOR BIDDING

6-07.3(9)A Paint System

The first paragraph is revised to read:

The paint system applied to new steel surfaces shall consist of the following:

Option 1 (component based paint system):

Primer Coat – Inorganic Zinc Rich	9-08.1(2)C
Intermediate Coat – Moisture Cured Polyurethane	9-08.1(2)G
Intermediate Stripe Coat – Moisture Cured Polyurethane	9-08.1(2)G
Top Coat – Moisture Cured Polyurethane	9-08.1(2)H

Option 2 (performance based paint system):

Primer Coat – Inorganic Zinc Rich	9-08.1(2)M
Intermediate Coat – Epoxy	9-08.1(2)M
Intermediate Stripe Coat – Epoxy	9-08.1(2)M
Top Coat – Polyurethane	9-08.1(2)M

The following new paragraph is inserted after the first paragraph:

Paints and related materials shall be products listed in the current WSDOT Qualified Products List (QPL). Component based paint systems shall be listed on the QPL in the applicable sections of Section 9-08. Performance based systems shall be listed on the current Northeast Protective Coatings Committee (NEPCOAT) Qualified Products List "A" as listed on the WSDOT QPL in Section 9-08.1(2)M. If the paint and related materials for the component based system is not listed in the current WSDOT QPL, a sample shall be submitted to the State Materials Laboratory in Tumwater for evaluation and acceptance in accordance with Section 9-08.

6-07.3(9)C Mixing and Thinning Paint

This section is revised to read:

The Contractor shall thoroughly mix paint in accordance with the manufacturer's written recommendations and by mechanical means to ensure a uniform and lump free composition. Paint shall not be mixed by means of air stream bubbling or boxing. Paint shall be mixed in the original containers and mixing shall continue until all pigment or metallic powder is in suspension. Care shall be taken to ensure that the solid material that has settled to the bottom of the container is thoroughly dispersed. After mixing, the Contractor shall inspect the paint for uniformity and to ensure that no unmixed pigment or lumps are present.

Catalysts, curing agents, hardeners, initiators, or dry metallic powders that are packaged separately may be added to the base paint in accordance with the paint manufacturer's written recommendations and only after the paint is thoroughly mixed to achieve a uniform mixture with all particles wetted. The Contractor shall then add the proper volume of curing agent to the correct volume of base and mix thoroughly. The mixture shall be used within the pot life specified by the manufacturer. Unused portions shall be discarded at the end of each work day. Accelerants are not permitted except as allowed by the Engineer.

The Contractor shall not add additional thinner at the application site except as allowed by the Engineer. The amount and type of thinner, if allowed, shall conform to the manufacturer's specifications. If recommended by the manufacturer and allowed by the Engineer, a measuring cup shall be used for the addition of thinner to any paint with

INFORMATIONAL COPY ONLY-NOT FOR BIDDING

graduations in ounces. No un-measured addition of thinner to paint will be allowed. Any paint found to be thinned by unacceptable methods will be rejected.

When recommended by the manufacturer, the Contractor shall constantly agitate paint during application by use of paint pots equipped with mechanical agitators.

The Contractor shall strain all paint after mixing to remove undesirable matter, but without removing the pigment or metallic powder.

Paint shall be stored and mixed in a secure, contained location to eliminate the potential for spills into State waters and onto the ground and highway surfaces.

6-07.3(9)D Coating Thickness

This section is revised to read:

Dry film thickness shall be measured in accordance with SSPC Paint Application Specification No. 2, *Procedure for Determining Conformance to Dry Coating Thickness Requirements*.

The minimum dry film thickness of the primer coat shall not be less than 2.5 mils.

The minimum dry film thickness of each coat (combination of intermediate and intermediate stripe, and top) shall be not less than 3.0 mils.

The dry film thickness of each coat shall not be thicker than the paint manufacturer's recommended maximum thickness.

The minimum wet film thickness of each coat shall be specified by the paint manufacturer to achieve the minimum dry film thickness.

Film thickness, wet and dry, will be measured by gages conforming to Section 6-07.3(8)A.

Wet measurements will be taken immediately after the paint is applied in accordance with ASTM D4414. Dry measurements will be taken after the coating is dry and hard in accordance with SSPC Paint Application Specification No. 2.

Each painter shall be equipped with wet film thickness gages and shall be responsible for performing frequent checks of the paint film thickness throughout application.

Coating thickness measurements may be made by the Engineer after the application of each coat and before the application of the succeeding coat. In addition, the Engineer may inspect for uniform and complete coverage and appearance. One hundred percent of all thickness measurements shall meet or exceed the minimum wet film thickness. In areas where wet film thickness measurements are impractical, dry film thickness measurements may be made. If a question arises about an individual coat's thickness or coverage, it may be verified by the use of a Tooke gage in accordance with ASTM D4138.

If the specified number of coats does not produce a combined dry film thickness of at least the sum of the thicknesses required per coat, if an individual coat does not meet the minimum thickness, or if visual inspection shows incomplete coverage, the coating system will be rejected and the Contractor shall discontinue painting and surface preparation operations and shall submit a Type 2 Working Drawing of the repair proposal. The repair proposal shall include documentation demonstrating the cause of the less-than-minimum thickness, along with physical test results, as necessary, and modifications to Work

INFORMATIONAL COPY ONLY - NOT FOR BIDDING

methods to prevent similar results. The Contractor shall not resume painting or surface preparation operations until receiving the Engineer's acceptance of the completed repair.

6-07.3(9)E Surface Temperature Requirements Prior to Application of Paint

This section, including title, is revised to read:

6-07.3(9)E Environmental Condition Requirements Prior to Application of Paint

Paint shall be applied only during periods when:

1. Air and steel temperatures are in accordance with the paint manufacturer's recommendations but in no case less than 35°F nor greater than 115°F.

2. Steel surface temperature is a minimum of 5°F above the dew point.

3. Steel surface is not wet.

4. Relative humidity is within the manufacturer's recommended range.

5. The anticipated ambient temperature will remain above 35°F or the manufacturer's minimum temperature, whichever is greater, during the paint drying and curing period.

Application will not be allowed if conditions are not favorable for proper application and performance of the paint.

Paint shall not be applied when weather conditions are unfavorable to proper curing. If a paint system manufacturer's recommendations allow for application of a paint under environmental conditions other than those specified, the Contractor shall submit a Type 2 Working Drawing consisting of a letter from the paint manufacturer specifying the environmental conditions under which the paint can be applied. Application of paint under environmental conditions other than those specified in this section will not be allowed without the Engineer's concurrence.

6-07.3(9)F Shop Surface Cleaning and Preparation

The last sentence is revised to read:

The entire steel surface to be painted, including surfaces specified in Section 6-07.3(9)G to receive a mist coat of primer, shall be cleaned to a near white condition in accordance with SSPC-SP 10, *Near-white Metal Blast Cleaning*, and shall be in this condition immediately prior to paint application.

6-07.3(9)G Application of Shop Primer Coat

The first paragraph is supplemented with the following:

Repairs of the shop primer coat shall be prepared in accordance with the painting plan. Shop primer coat repair paint shall be selected from the approved component based or performance based paint system in accordance with Section 6-07.3(10)H.

6-07.3(9)H Containment for Field Coating

This section is revised to read:

INFORMATIONAL COPY ONLY - NOT FOR BIDDING

The Contractor shall use a containment system in accordance with Section 6-07.3(10)A for surface preparation and prime coating of all uncoated areas remaining, including bolts, nuts, washers, and splice plates.

During painting operations of the intermediate, stripe and top coats the Contractor shall furnish, install, and maintain drip tarps below the areas to be painted to contain all spilled paint, buckets, brushes, and other deleterious material, and prevent such materials from reaching the environment below or adjacent to the structure being painted. Drip tarps shall be absorbent material and hung to minimize puddling. The Contractor shall evaluate the project-specific conditions to determine the specific type and extent of containment needed to control the paint emissions and shall submit a containment plan in accordance with Section 6-07.3(2).

6-07.3(9)I Application of Field Coatings

This section is revised to read:

An on-site supervisor shall be present for each work shift at the bridge site.

Upon completion of erection Work, all uncoated or damaged areas remaining, including bolts, nuts, washers, and splice plates, shall be prepared in accordance with Section 6-07.3(9)F, followed by a field primer coat of a zinc-rich primer and final coats of paint selected from the approved component or performance based paint system in accordance with Section 6-07.3(10)H. . The intermediate, intermediate stripe, and top coats shall be applied in accordance with the manufacturer's written recommendations.

Upon completion of erection Work, welds for steel column jackets may be prepared in accordance with SSPC-SP 15, Commercial Grade Power Tool Cleaning.

The minimum drying time between coats shall be as shown in the product data sheets, but not less than 12 hours. The Contractor shall determine whether the paint has cured sufficiently for proper application of succeeding coats.

The maximum time between intermediate and top coats shall be in accordance with the manufacturer's written recommendations. If the maximum time between coats is exceeded, all newly coated surfaces shall be prepared to SSPC-SP 7, *Brush-off Blast Cleaning*, and shall be repainted with the same paint that was cleaned, at no additional cost to the Contracting Agency.

Each coat shall be applied in a uniform layer, completely covering the preceding coat. The Contractor shall correct runs, sags, skips, or other deficiencies before application of succeeding coats. Such corrective work may require re-cleaning, application of additional paint, or other means as determined by the Engineer, at no additional cost to the Contracting Agency.

Dry film thickness measurements will be made in accordance with Section 6-07.3(9)D.

All paint damage that occurs shall be repaired in accordance with the manufacturer's written recommendations. On bare areas or areas of insufficient primer thickness, the repair shall include field-applied zinc-rich primer and the final coats of paint selected from the approved component or performance based paint system in accordance with Section 6-07.3(10)H. On areas where the primer is at least equal to the minimum required dry film thickness, the repair shall include the application of the final two coats of the paint system. All paint repair operations shall be performed by the Contractor at no additional cost or time to the Contracting Agency.

INFORMATIONAL COPY ONLY - NOT FOR BIDDING

6-07.3(10)A Containment

The first sentence of the third paragraph is revised to read:

> Emissions shall be assessed by Visible Emission Observations (Method A) in SSPC Technology Update No. 7, *Conducting Ambient Air, Soil, and Water Sampling of Surface Preparation and Paint Disturbance Activities*, Section 6.2 and shall be limited to the Level A Acceptance Criteria Option Level 0 Emissions standard.

6-07.3(10)D Surface Preparation Prior to Overcoat Painting

The first paragraph is revised to read:

> The Contractor shall remove any visible oil, grease, and road tar in accordance with SSPC-SP 1, *Solvent Cleaning*.

The second paragraph is revised to read:

> Following any preparation by SSPC-SP1, all steel surfaces to be painted shall be prepared in accordance with SSPC-SP 7, *Brush-off Blast Cleaning*. Surfaces inaccessible to brush-off blast shall be prepared in accordance with SSPC-SP 3, *Power Tool Cleaning*, as allowed by the Engineer.

The first sentence of the third paragraph is revised to read:

> Following brush-off blast cleaning, the Contractor shall perform spot abrasive blast cleaning in accordance with SSPC-SP 6, *Commercial Blast Cleaning*.

The second to last sentence of the third paragraph is revised to read:

> For small areas, as allowed by the Engineer, the Contractor may substitute cleaning in accordance with SSPC-SP 15, *Commercial Grade Power Tool Cleaning*.

6-07.3(10)G Treatment of Pack and Rust Gaps

The second paragraph is revised to read:

> Pack rust forming a gap between steel surfaces of $1/16$ to $1/4$ inch shall be cleaned to a depth of at least one half of the gap width. The gaps shall be cleaned and prepared in accordance with SSPC-SP6. The cleaned gap shall be treated with rust penetrating sealer, prime coated, and then caulked to form a watertight seal along the top edge and the two sides of the steel pieces involved, using the rust penetrating sealer and caulk as accepted by the Engineer. The bottom edge or lowest edge of the steel pieces involved shall not be caulked.

The third paragraph is supplemented with the following:

> Caulk shall be a single-component urethane sealant conforming to Section 9-08.7.

The fifth paragraph is revised to read:

> At locations where gaps between steel surfaces exceed $1/4$ inch, the Contractor shall clean and prepare the gap in accordance SSPC-SP6, apply the rust penetrating sealer, apply the prime coat, and then fill the gap with foam backer rod material as accepted by the Engineer. The foam backer rod material shall be of sufficient diameter to fill the crevice or gap. The Contractor shall apply caulk over the foam backer rod material to form a watertight seal.

INFORMATIONAL COPY ONLY - NOT FOR BIDDING

This section is supplemented with the following new paragraph:

Caulk and backer rod, if needed, shall be placed prior to applying the top coat. The Contractor, with the concurrence of the Engineer, may apply the rust penetrating sealer after application of the prime coat provided the primer is removed in the areas to be sealed. The areas to be sealed shall be re-cleaned and re-prepared in accordance with SSPC-SP6.

6-07.3(10)H Paint System

The first paragraph is revised to read:

The paint system applied to existing steel surfaces shall consist of the following five-coat system:

Option 1 (component based system):

Primer Coat – Zinc-filled Moisture Cured Polyurethane	9-08.1(2)F
Primer Stripe Coat - Moisture Cured Polyurethane	9-08.1(2)F
Intermediate Coat - Moisture Cured Polyurethane	9-08.1(2)G
Intermediate Stripe Coat - Moisture Cured Polyurethane	9-08.1(2)G
Top Coat - Moisture Cured Polyurethane	9-08.1(2)H

Option 2 (performance based system):

Primer Coat – Zinc-rich Epoxy	9-08.1(2)N
Primer Stripe Coat – Epoxy	9-08.1(2)N
Intermediate Coat – Epoxy	9-08.1(2)N
Intermediate Stripe Coat – Epoxy	9-08.1(2)N
Top Coat – Polyurethane	9-08.1(2)N

The following new paragraph is inserted after the first paragraph:

Paints and related materials shall be a product listed in the current WSDOT Qualified Products List (QPL). Component based paint systems shall be listed on the QPL in the applicable sections of Section 9-08. Performance based systems shall be listed on the current Northeast Protective Coatings Committee (NEPCOAT) Qualified Products List "B" as listed on the WSDOT QPL in Section 9-08.1(2)N. If the paint and related material for the component based system is not listed in the current WSDOT QPL, a sample shall be submitted to the State Materials Laboratory in Tumwater for evaluation and acceptance in accordance with Section 9-08.

6-07.3(10)J Mixing and Thinning Paint

This section is revised to read:

Mixing and thinning paint shall be in accordance with Section 6-07.3(9)C.

6-07.3(10)K Coating Thickness

This section is revised to read:

Coating thickness shall be in accordance with Section 6-07.3(9)D except the minimum dry film thickness of each coat (combination of primer and primer stripe, combination of intermediate and intermediate stripe, and top) shall not be less than 3.0 mils.

INFORMATIONAL COPY ONLY - NOT FOR BIDDING

6-07.3(10)L Environmental Condition Requirements Prior to Application of Paint

This section is revised to read:

Environmental conditions shall be in accordance with Section 6-07.3(9)E.

6-07.3(10)M Steel Surface Condition Requirements Prior to Application of Paint

The third paragraph is revised to read:

Edges of existing paint shall be feathered in accordance with SSPC-PA 1, *Shop, Field, and Maintenance Coating of Metals*, Note 15.20.

6-07.3(10)N Field Coating Application Methods

The third sentence is revised to read:

The Contractor may apply stripe coat paint using spray or brush but shall follow spray application using a brush to ensure complete coverage around structural geometric irregularities and to push the paint into gaps between existing steel surfaces and around rivets and bolts.

6-07.3(10)O Applying Field Coatings

The second to last paragraph is revised to read:

Each application of primer, primer stripe, intermediate, intermediate stripe, and top coat shall be considered as separately applied coats. The Contractor shall not use a preceding or subsequent coat to remedy a deficiency in another coat. The Contractor shall apply the top coat to at least the minimum specified top coat thickness, to provide a uniform appearance and consistent finish coverage.

6-07.3(10)P Field Coating Repair

The second sentence is revised to read:

Repair areas shall be cleaned of all damaged paint and the system reapplied using all coats typical to the paint system and shall meet the minimum coating thickness.

6-07.3(11)A Painting of Galvanized Surfaces

This section is revised to read:

All galvanized surfaces receiving paint shall be prepared for painting in accordance with the ASTM D 6386. The method of preparation shall be brush-off in accordance with SSPC-SP16 *Brush-Off Blast Cleaning of Coated and Uncoated Galvanized Steel, Stainless Steels, and Non-Ferrous Metals* or as otherwise allowed by the Engineer. The Contractor shall not begin painting until receiving the Engineer's acceptance of the prepared galvanized surface. For galvanized bolts used for replacement of deteriorated existing rivets, the Contractor, with the concurrence of the Engineer and after successful demonstration testing, may prepare galvanized surfaces in accordance with SSPC-SP1 followed by SSPC-SP2, *Hand Tool Cleaning* or SSPC-SP3, *Power Tool Cleaning*. The demonstration testing shall include adhesion testing of the first coat of paint over galvanized bolts, nuts, and washers or a representative galvanized surface. Adhesion testing shall be performed in accordance with ASTM D 4541 for 600 psi minimum adhesion. A minimum of 3 successful tests shall be performed on the galvanized surface prepared and painted using the same methods and materials to be used on the galvanized bolts, nuts and washers in the field.

INFORMATIONAL COPY ONLY - NOT FOR BIDDING

6-07.3(11)A2 Paint Coat Materials

This section is revised to read:

The Contractor shall paint the dry surface as follows:

1. The first coat over a galvanized surface shall be an epoxy polyamide conforming to Section 9-08.1(2)E . In the case of galvanized bolts used for replacement of deteriorated existing rivets and for small surface areas less than or equal to one square foot, an intermediate moisture cured polyurethane conforming to Section 9-08.1(2)G may be used as a first coat. In both cases the first coat shall be compatible with galvanizing and as recommended by the top coat manufacturer.

2. The second coat shall be a top coat moisture cured aliphatic polyurethane conforming to Section 9-08.1(2)H or a top coat polyurethane conforming to Section 6-07.3(10)H Option 2 NEPCOAT performance based paint specification compatible with the first coat as recommended by the manufacturer.

Each coat shall be dry before the next coat is applied. All coats applied in the shop shall be dried hard before shipment.

6-07.3(11)B Powder Coating of Galvanized Surfaces

This section is revised to read:

Powder coating of galvanized surfaces shall consist of the following coats:

1. The first coat shall be an epoxy powder primer coat conforming to Section 9-08.2.

2. The second coat shall be a polyester finish coat conforming to Section 9-08.2.

6-07.3(11)B3 Galvanized Surface Cleaning and Preparation

The first three paragraphs are revised to read:

Galvanized surfaces receiving the powder coating shall be cleaned and prepared for coating in accordance with ASTM D 7803, and the project-specific powder coating plan.

Assemblies conforming to the ASTM D 7803 definition for newly galvanized steel shall receive surface smoothing and surface cleaning in accordance with ASTM D 7803, Section 5, and surface preparation in accordance with ASTM D 7803, Section 5.1.3.

Assemblies conforming to the ASTM D 7803 definition for partially weathered galvanized steel shall be checked and prepared in accordance with ASTM D 7803, Section 6, before then receiving surface smoothing and surface cleaning in accordance with ASTM D 7803, Section 5, and surface preparation in accordance with ASTM D 7803, Section 5.1.3.

The fourth paragraph (up until the colon) is revised to read:

Assemblies conforming to the ASTM D 7803 definition for weathered galvanized steel shall be prepared in accordance with ASTM D 7803, Section 7 before then receiving surface smoothing and surface cleaning in accordance with ASTM D 7803, Section 5, and surface preparation in accordance with ASTM D 7803, Section 5.3 except as follows:

6-07.3(11)B5 Testing

Item number 4 in the first paragraph is revised to read:

INFORMATIONAL COPY ONLY - NOT FOR BIDDING

4. Adhesion testing in accordance with ASTM D 4541 for 600 psi minimum adhesion for the complete two-component system.

The second sentence of the fourth paragraph is revised to read:

Rejected assemblies shall be repaired or recoated by the Contractor, at no additional expense to the Contracting Agency, in accordance with the powder coating manufacturer's recommendation as detailed in the project-specific powder coating plan, until the assemblies satisfy the acceptance testing requirements.

6-07.3(12) Painting Ferry Terminal Structures

This section is revised to read:

Painting of ferry terminal Structures shall be in accordance with Section 6-07.3 as supplemented below.

This section is supplemented with the following new subsections:

6-07.3(12)A Painting New Steel Ferry Terminal Structures

Painting of new steel Structures shall be in accordance with Section 6-07.3(9) except that all coatings (primer, intermediate, intermediate stripe, and top) shall be applied in the shop with the following exceptions:

1. Steel surfaces to be field welded.

2. Steel surfaces to be greased.

3. The length of piles designated in the Plans not requiring painting.

The minimum drying time between coats shall be as shown in the product data sheets, but not less than 12 hours. The Contractor shall determine whether the paint has cured sufficiently for proper application of succeeding coats.

6-07.3(12)A1 Paint Systems

Paint systems for Structural Steel, which includes vehicle transfer spans and towers, pedestrian overhead loading structures and towers, upland structural steel and other elements as designated in the Special Provisions shall be as specified in Section 6-07.3(9)A.

Paint systems for Piling, Landing Aids and Life Ladders shall be as specified in the Special Provisions.

6-07.3(12)A2 Paint Color

Paint colors shall be as specified in the Special Provisions.

6-07.3(12)A3 Coating Thickness

Coating thicknesses shall be as specified in the Special Provisions.

6-07.3(12)A4 Application of Field Coatings

An on-site supervisor shall be present for each work shift at the project site.

Upon completion of erection Work, all uncoated or damaged areas remaining, including bolts, nuts, washers, splice plates, and field welds shall be prepared in accordance with SSPC-SP 1, Solvent Cleaning, followed by SSPC-SP 11, *Power Tool*

INFORMATIONAL COPY ONLY - NOT FOR BIDDING

Cleaning to Bare Metal. Surface preparation shall be measured according to SSPC-VIS 3. SSPC-SP 11 shall be performed for a minimum distance of 1 inch from the uncoated or damaged area. In addition, intact shop-applied coating surrounding the area shall be abraded or sanded for a distance of 6 inches out from the properly prepared clean/bare metal areas to provide adequate roughness for application of field coatings. All sanding dust and contamination shall be removed prior to application of field coatings.

Field applied paint for Structural Steel shall conform to Section 6-07.3(10)H, as applicable. Field applied paint for Piling, Landing Aids and Life Ladders shall be as specified in the Special Provisions.

For areas above the tidal zone, the minimum drying time between coats shall be as shown in the product data sheets, but not less than 12 hours. For areas within the tidal zone, the minimum drying time between coats shall be as recommended by the paint system manufacturer. The Contractor shall determine whether the paint has cured sufficiently for proper application of succeeding coats.

The maximum time between intermediate and top coats shall be in accordance with the manufacturer's written recommendations. If the maximum time between coats is exceeded, all newly coated surfaces shall be prepared to SSPC-SP 3, *Power Tool Cleaning*, and shall be repainted with the same paint that was cleaned, at no additional cost to the Contracting Agency.

Each coat shall be applied in a uniform layer, completely covering the preceding coat. The Contractor shall correct runs, sags, skips, or other deficiencies before application of succeeding coats. Such corrective work may require re-cleaning, application of additional paint, or other means as determined by the Engineer, at no additional cost to the Contracting Agency.

Surface preparation for underwater locations shall consist of removing all dirt, oil, grease, loose paint, loose rust, and marine growth from the area that is to be repaired. The sound paint surrounding the damaged area shall be roughened to meet the requirements of the manufacturer. Paint for underwater applications shall be as specified in the Special Provisions and shall be applied in accordance with the manufacturer's recommendations.

6-07.3(12)B Painting Existing Steel Ferry Terminal Structures

Painting of existing steel structures shall be in accordance with Section 6-07.3(10) as supplemented by the following.

6-07.3(12)B1 Containment

Containment for full removal shall be in accordance with Section 6-07.3(10)A. Containment for overcoat systems shall be in accordance with all applicable Permits as required in the Special Provisions.

Prior to cleaning the Contractor shall enclose all exposed electrical and mechanical equipment to seal out dust, water, and paint. Non-metallic surfaces shall not be abrasive blasted or painted. Unless otherwise specified, the following metallic surfaces shall not be painted and shall be protected from abrasive blasting and painting:

1. Galvanized and stainless steel surfaces not previously painted,

2. Non-skid surfaces,

INFORMATIONAL COPY ONLY - NOT FOR BIDDING

3. Unpainted intentionally greased surfaces,

4. Equipment labels, identification plates, tags, etc.,

5. Fire and emergency containers or boxes,

6. Mechanical hardware such as hoist sheaves, hydraulic cylinders, gear boxes, wire rope, etc.

The Contractor shall submit a Type 2 Working Drawing consisting of materials and equipment used to shield components specified to not be cleaned and painted. The Contractor shall shut off the power prior to working around electrical equipment. The Contractor shall follow the lock-out/tag-out safety provisions of the WAC 296-803 and all other applicable safety standards.

6-07.3(12)B2 Surface Preparation

For applications above high water and within the tidal zone, surface preparation for overcoat painting shall be in accordance with SSPC-SP 1, *Solvent Cleaning*, followed by SSPC-SP 3, *Power Tool Cleaning*. Use of wire brushes is not allowed. After SP 3 cleaning has been completed all surfaces exhibiting coating failure down to the steel substrate, and those exhibiting visible corrosion, shall be prepared down to clean bare steel in accordance with SSPC-SP 15, Commercial Grade *Power Tool Cleaning*. Surface preparation shall be measured according to SSPC-VIS 3. SSPC-SP 15 shall be performed for a minimum distance of 1 inch from the area exhibiting failure or visible corrosion. In addition, intact shop-applied coating surrounding the repair area shall be abraded or sanded for a distance of 6 inches out from the properly prepared clean/bare metal areas to provide adequate roughness for application of repair coatings. All sanding dust and contamination shall be removed prior to application of repair coatings. Surface preparation for full paint removal shall be in accordance with Section 6-07.3(10)E except SSPC-SP 11 will be permitted as detailed in the Contractor's painting plan and as allowed by the Engineer.

Surface preparation for underwater locations shall consist of removing all dirt, oil, grease, loose paint, loose rust, and marine growth from the area that is to be repaired. The sound paint surrounding the damaged area shall be roughened as required by the coating manufacturer.

Removed marine growth may be released to state waters provided the marine growth is not mixed with contaminants (paint, oil, rust, etc.) and it shall not accumulate on the seabed. All marine growth containing contaminants shall be collected for proper disposal.

Surface preparation for the underside of bridge decks (consisting of either a steel grid system of main bars or tees and a light gauge metal form, in-filled with concrete or a corrugated light gauge metal form, infilled with concrete) shall be in accordance with SSPC-SP 2, *Hand Tool Cleaning* or SSPC-SP 3, *Power Tool Cleaning* with the intent of not causing further damage to the light gauge metal form. Following removal of any pack rust and corroded sections from the underside of the bridge deck, cleaning and flushing to remove salts and prior to applying the primer coat, the Contractor shall seal the entire underside of the deck system with rust-penetrating sealer. Damage to galvanized metal forms and/or grids shall be repaired in accordance with ASTM A 780, with the preferred method of repair using paints containing zinc dust.

INFORMATIONAL COPY ONLY, NOT FOR BIDDING

6-07.3(12)B3 Paint Systems
Paints systems for Structural Steel, which includes vehicle transfer spans and towers, pedestrian overhead loading structures and towers, upland structural steel and other elements as designated in the Special Provisions shall be as specified in Section 6-07.3(10)H.

Paint systems for Piling, Landing Aids, Life Ladders, underside of vehicle transfer span bridge decks, non-skid surface treated areas, and anti-graffiti coatings shall be as specified in the Special Provisions.

6-07.3(12)B4 Paint Color
Paint colors shall be as specified in the Special Provisions.

6-07.3(12)B5 Coating Thickness
Coating thicknesses shall be as specified in the Special Provisions.

6-07.3(12)B6 Application of Field Coatings
Application of field coatings shall be in accordance with Section 6-07.3(10)O and Section 6-07.3(12)A2 except for the following:

1. All coatings applied in the field shall be applied using a brush or roller. Spray application methods may be used if allowed by the Engineer.

2. Applied coatings shall not be immersed until the coating has been cured as required by the coating manufacturer.

3. Non-skid surface treatment products shall be applied in accordance with the manufacturer's recommendations.

4. Anti-graffiti coatings shall be applied in one coat following application of the top coat, where specified in the Plans.

6-07.3(14)B Reference Standards
The second standard reference (to SSPC CS 23.00), and its accompanying title, is revised to read:

SSPC CS 23.00	Specification for the Application of Thermal Spray Coatings (Metallizing) of Aluminum, Zinc, and Their Alloys and Composites for the Corrosion Protection of Steel

Section 8-01, Erosion Control and Water Pollution Control
April 2, 2018

8-01.1 Description
This section is revised to read:

This Work consists of furnishing, installing, maintaining, removing and disposing of best management practices (BMPs), as defined in the Washington Administrative Code (WAC) 173-201A, to manage erosion and water quality in accordance with these Specifications and as shown in the Plans or as designated by the Engineer.

The Contracting Agency may have a National Pollution Discharge Elimination System Construction Stormwater General Permit (CSWGP) as identified in the Contract Special

INFORMATIONAL COPY ONLY - NOT FOR BIDDING

Provisions. The Contracting Agency may or may not transfer coverage of the CSWGP to the Contractor when a CSWGP has been obtained. The Contracting Agency may not have a CSWGP for the project but may have another water quality related permit as identified in the Contract Special Provisions or the Contracting Agency may not have water quality related permits but the project is subject to applicable laws for the Work. Section 8-01 covers all of these conditions.

8-01.2 Materials

The first paragraph is revised to read:

Materials shall meet the requirements of the following sections:

Corrugated Polyethylene Drain Pipe	9-05.1(6)
Quarry Spalls	9-13
Erosion Control and Roadside Planting	9-14
Construction Geotextile	9-33

8-01.3(1) General

This section is revised to read:

Adaptive management shall be employed throughout the duration of the project for the implementation of erosion and water pollution control permit requirements for the current condition of the project site. The adaptive management includes the selection and utilization of BMPs, scheduling of activities, prohibiting unacceptable practices, implementing maintenance procedures, and other managerial practices that when used singularly or in combination, prevent or reduce the release of pollutants to waters of the State. The adaptive management shall use the means and methods identified in this section and means and methods identified in the Washington State Department of Transportation's Temporary Erosion and Sediment Control Manual or the Washington State Department of Ecology's Stormwater Management Manuals for construction stormwater.

The Contractor shall install a high visibility fence along the site preservation lines shown in the Plans or as instructed by the Engineer.

Throughout the life of the project, the Contractor shall preserve and protect the delineated preservation area, acting immediately to repair or restore any fencing damaged or removed.

All discharges to surface waters shall comply with surface water quality standards as defined in Washington Administrative Code (WAC) Chapter 173-201A. All discharges to the ground shall comply with groundwater quality standards WAC Chapter 173-200.

The Contractor shall comply with the CSWGP when the project is covered by the CSWGP. Temporary Work, at a minimum, shall include the implementation of:

1. Sediment control measures prior to ground disturbing activities to ensure all discharges from construction areas receive treatment prior to discharging from the site.

2. Flow control measures to prevent erosive flows from developing.

3. Water management strategies and pollution prevention measures to prevent contamination of waters that will be discharged to surface waters or the ground.

INFORMATIONAL COPY ONLY - NOT FOR BIDDING

4. Erosion control measures to stabilize erodible earth not being worked.

5. Maintenance of BMPs to ensure continued compliant performance.

6. Immediate corrective action if evidence suggests construction activity is not in compliance. Evidence includes sampling data, olfactory or visual evidence such as the presence of suspended sediment, turbidity, discoloration, or oil sheen in discharges.

To the degree possible, the Contractor shall coordinate this temporary Work with permanent drainage and erosion control Work the Contract requires.

Clearing, grubbing, excavation, borrow, or fill within the Right of Way shall never expose more erodible earth than as listed below:

Western Washington (West of the Cascade Mountain Crest)	
May 1 through September 30	17 Acres
October 1 through April 30	5 Acres

Eastern Washington (East of the Cascade Mountain Crest)	
April 1 through October 31	17 Acres
November 1 through March 31	5 Acres

The Engineer may increase or decrease the limits based on project conditions.

Erodible earth is defined as any surface where soils, grindings, or other materials may be capable of being displaced and transported by rain, wind, or surface water runoff.

Erodible earth not being worked, whether at final grade or not, shall be covered within the specified time period (see the table below), using BMPs for erosion control.

Western Washington (West of the Cascade Mountain Crest)	
October 1 through April 30	2 days maximum
May 1 to September 30	7 days maximum

Eastern Washington (East of the Cascade Mountain Crest)	
October 1 through June 30	5 days maximum
November 1 through March 31	10 days maximum

When applicable, the Contractor shall be responsible for all Work required for compliance with the CSWGP including annual permit fees.

If the Engineer, under Section 1-08.6, orders the Work suspended, the Contractor shall continue to comply with this division during the suspension.

Nothing in this Section shall relieve the Contractor from complying with other Contract requirements.

8-01.3(1)A Submittals

This section's content is deleted.

INFORMATIONAL COPY ONLY - NOT FOR BIDDING

This section is supplemented with the following new subsection:

8-01.3(1)A1 Temporary Erosion and Sediment Control

A Temporary Erosion and Sediment Control (TESC) plan consists of a narrative section and plan sheets that meets the Washington State Department of Ecology's Stormwater Pollution Prevention Plan (SWPPP) requirement in the CSWGP. Abbreviated TESC plans are not required to include plan sheets and are used on small projects that disturb soil and have the potential to discharge but are not covered by the CSWGP. The contract uses the term "TESC plan" to describe both TESC plans and abbreviated TESC plans. When the Contracting Agency has developed a TESC plan for a Contract, the narrative is included in the appendix to the Special Provisions and the TESC plan sheets, when required, are included in the Contract Plans. The Contracting Agency TESC plan will not include off-site areas used to directly support construction activity.

The Contractor shall either adopt the TESC Plan in the Contract or develop a new TESC Plan. If the Contractor adopts the Contracting Agency TESC Plan, the Contractor shall modify the TESC Plan to meet the Contractor's schedule, method of construction, and to include off-site areas that will be used to directly support construction activity such as equipment staging yards, material storage areas, or borrow areas. Contractor TESC Plans shall include all high visibility fence delineation shown on the Contracting Agency Contract Plans. All TESC Plans shall meet the requirements of the current edition of the WSDOT Temporary Erosion and Sediment Control Manual M 3109 and be adaptively managed as needed throughout construction based on site inspections and discharge samples to maintain compliance with the CSWGP. The Contractor shall develop a schedule for implementation of the TESC work and incorporate it into the Contractor's progress schedule.

The Contractor shall submit their TESC Plan (either the adopted plan or new plan) and implementation schedule as Type 2 Working Drawings. At the request of the Engineer, updated TESC Plans shall be submitted as Type 1 Working Drawings.

8-01.3(1)B Erosion and Sediment Control (ESC) Lead

This section is revised to read:

The Contractor shall identify the ESC Lead at the preconstruction discussions and in the TESC Plan. The ESC Lead shall have, for the life of the Contract, a current Certificate of Training in Construction Site Erosion and Sediment Control from a course approved by the Washington State Department of Ecology. The ESC Lead must be onsite or on call at all times throughout construction. The ESC Lead shall be listed on the Emergency Contact List required under Section 1-05.13(1).

The ESC Lead shall implement the TESC Plan. Implementation shall include, but is not limited to:

1. Installing, adaptively managing, and maintaining temporary erosion and sediment control BMPs to assure continued performance of their intended function. Damaged or inadequate BMPs shall be corrected immediately.

2. Updating the TESC Plan to reflect current field conditions.

3. Discharge sampling and submitting Discharge Monitoring Reports (DMRs) to the Washington State Department of Ecology in accordance with the CSWGP.

INFORMATIONAL COPY ONLY - NOT FOR BIDDING

4. Develop and maintain the Site Log Book as defined in the CSWGP. When the Site Log Book or portion thereof is electronically developed, the electronic documentation must be accessible onsite. As a part of the Site Log Book, the Contractor shall develop and maintain a tracking table to show that identified TESC compliance issues are fully resolved within 10 calendar days. The table shall include the date an issue was identified, a description of how it was resolved, and the date the issue was fully resolved.

The ESC Lead shall also inspect all areas disturbed by construction activities, all on-site erosion and sediment control BMPs, and all stormwater discharge points at least once every calendar week and within 24-hours of runoff events in which stormwater discharges from the site. Inspections of temporarily stabilized, inactive sites may be reduced to once every calendar month. The Washington State Department of Ecology's Erosion and Sediment Control Site Inspection Form, located at https://ecology.wa.gov/Regulations-Permits/Permits-certifications/Stormwater-general-permits/Construction-stormwater-permit, shall be completed for each inspection and a copy shall be submitted to the Engineer no later than the end of the next working day following the inspection.

8-01.3(1)C Water Management

This section is supplemented with the following new subsections:

8-01.3(1)C5 Water Management for In-Water Work Below Ordinary High Water Mark (OHWM)

Work over surface waters of the state (defined in WAC 173-201A-010) or below the OHWM (defined in RCW 90.58.030) must comply with water quality standards for surface waters of the state of Washington.

8-01.3(1)C6 Environmentally Acceptable Hydraulic Fluid

All equipment containing hydraulic fluid that extends from a bridge deck over surface waters of the state or below the OHWM, shall be equipped with an environmentally acceptable hydraulic fluid. The fluid shall meet specific requirements for biodegradability, aquatic toxicity, and bioaccumulation in accordance with the United States Environmental Protection Agency (EPA) publication EPA800-R-11-002. Acceptance shall be in accordance with Section 1-06.3, Manufacturer's Certification of Compliance.

The designation of environmentally acceptable hydraulic fluid does not mean fluid spills are acceptable. The Contractor shall respond to spills to land or water in accordance with the Contract.

8-01.3(1)C7 Turbidity Curtain

All Work for the turbidity curtain shall be in accordance with the manufacturer's recommendations for the site conditions. Removal procedures shall be developed and used to minimize silt release and disturbance of silt. The Contractor shall submit a Type 2 Working Drawing, detailing product information, installation and removal procedures, equipment and workforce needs, maintenance plans, and emergency repair/replacement plans.

Turbidity curtain materials, installation, and maintenance shall be sufficient to comply with water quality standards.

The Contractor shall notify the Engineer 10 days in advance of removing the turbidity curtain. All components of the turbidity curtain shall be removed from the project.

INFORMATIONAL COPY ONLY - NOT FOR BIDDING

8-01.3(1)C1 Disposal of Dewatering Water

This section is revised to read:

When uncontaminated groundwater is encountered in an excavation on a project it may be infiltrated within vegetated areas of the right of way not designated as Sensitive Areas or incorporated into an existing stormwater conveyance system at a rate that will not cause erosion or flooding in any receiving surface water.

Alternatively, the Contractor may pursue independent disposal and treatment alternatives that do not use the stormwater conveyance system provided it is in compliance with the applicable WACs and permits.

8-01.3(1)C2 Process Wastewater

This section is revised to read:

Wastewater generated on-site as a byproduct of a construction process shall not be discharged to surface waters of the State. Some sources of process wastewater may be infiltrated in accordance with the CSWGP with concurrence from the Engineer. Some sources of process wastewater may be disposed via independent disposal and treatment alternatives in compliance with the applicable WACs and permits.

8-01.3(1)C3 Shaft Drilling Slurry Wastewater

This section is revised to read:

Wastewater generated on-site during shaft drilling activity shall be managed and disposed of in accordance with the requirements below. No shaft drilling slurry wastewater shall be discharged to surface waters of the State. Neither the sediment nor liquid portions of the shaft drilling slurry wastewater shall be contaminated, as detectable by visible or olfactory indication (e.g., chemical sheen or smell).

1. Water-only shaft drilling slurry or water slurry with accepted flocculants may be infiltrated on-site. Flocculants used shall meet the requirements of Section 9-14.5(1) or shall be chitosan products listed as General Use Level Designation (GULD) on the Washington State Department of Ecology's stormwater treatment technologies webpage for construction treatment. Infiltration is permitted if the following requirements are met:

   a. Wastewater shall have a pH of 6.5 – 8.5 prior to discharge.

   b. The amount of flocculant added to the slurry shall be kept to the minimum needed to adequately settle out solids. The flocculant shall be thoroughly mixed into the slurry.

   c. The slurry removed from the shaft shall be contained in a leak proof cell or tank for a minimum of 3 hours.

   d. The infiltration rate shall be reduced if needed to prevent wastewater from leaving the infiltration location. The infiltration site shall be monitored regularly during infiltration activity. All wastewater discharged to the ground shall fully infiltrate and discharges shall stop before the end of each work day.

   e. Drilling spoils and settled sediments remaining in the containment cell or tank shall be disposed of in accordance with Section 6-19.3(4)F.

INFORMATIONAL COPY ONLY - NOT FOR BIDDING

f. Infiltration locations shall be in upland areas at least 150 feet away from surface waters, wells, on-site sewage systems, aquifer sensitive recharge areas, sole source aquifers, well head protection areas, and shall be marked on the plan sheets before the infiltration activity begins.

g. Prior to infiltration, the Contractor shall submit a Shaft Drilling Slurry Wastewater Management and Infiltration Plan as a Type 2 Working Drawing. This Plan shall be kept on-site, adapted if needed to meet the construction requirements, and updated to reflect what is being done in the field. The Working Drawing shall include, at a minimum, the following information:

i. Plan sheet showing the proposed infiltration location and all surface waters, wells, on-site sewage systems, aquifer-sensitive recharge areas, sole source aquifers, and well-head protection areas within 150 feet.

ii. The proposed elevation of soil surface receiving the wastewater for infiltration and the anticipated phreatic surface (i.e., saturated soil).

iii. The source of the water used to produce the slurry.

iv. The estimated total volume of wastewater to be infiltrated.

v. The accepted flocculant to be used (if any).

vi. The controls or methods used to prevent surface wastewater runoff from leaving the infiltration location.

vii. The strategy for removing slurry wastewater from the shaft and containing the slurry wastewater once it has been removed from the shaft.

viii. The strategy for monitoring infiltration activity and adapting methods to ensure compliance.

ix. A contingency plan that can be implemented immediately if it becomes evident that the controls in place or methods being used are not adequate.

x. The strategy for cleaning up the infiltration location after the infiltration activity is done. Cleanup shall include stabilizing any loose sediment on the surface within the infiltration area generated as a byproduct of suspended solids in the infiltrated wastewater or soil disturbance associated with BMP placement and removal.

2. Shaft drilling mineral slurry, synthetic slurry, or slurry with polymer additives not allowed for infiltration shall be contained and disposed of by the Contractor at an accepted disposal facility in accordance with Section 2-03.3(7)C. Spoils that have come into contact with mineral slurry shall be disposed of in accordance with Section 6-19.3(4)F.

8-01.3(1)C4 Management of Off-Site Water

This section is revised to read:

INFORMATIONAL COPY ONLY - NOT FOR BIDDING

Prior to clearing and grubbing, the Contractor shall intercept all sources of off-site surface water and overland flow that will run-on to the project. Off-site surface water run-on shall be diverted through or around the project in a way that does not introduce construction related pollution. It shall be diverted to its preconstruction discharge location in a manner that does not increase preconstruction flow rate and velocity and protects contiguous properties and waterways from erosion. The Contractor shall submit a Type 2 Working Drawing consisting of the method for performing this Work.

8-01.3(1)E Detention/Retention Pond Construction

This section is revised to read:

Whether permanent or temporary, ponds shall be constructed before beginning other grading and excavation Work in the area that drains into that pond. Detention/retention ponds may be constructed concurrently with grading and excavation when allowed by the Engineer. Temporary conveyances shall be installed concurrently with grading in accordance with the TESC Plan so that newly graded areas drain to the pond as they are exposed.

8-01.3(2)F Dates for Application of Final Seed, Fertilizer, and Mulch

In the table, the second column heading is revised to read:

Eastern Washington[1]
(East of the Cascade Mountain Crest)

Footnote 1 in the table is revised to read:

Seeding may be allowed outside these dates when allowed or directed by the Engineer.

8-01.3(5) Plastic Covering

The first sentence of the first paragraph is revised to read:

Erosion Control – Plastic coverings used to temporarily cover stockpiled materials, slopes or bare soils shall be installed and maintained in a way that prevents water from intruding under the plastic and prevents the plastic cover from being damaged by wind.

8-01.3(7) Stabilized Construction Entrance

The first paragraph is revised to read:

Temporary stabilized construction entrance shall be constructed in accordance with the *Standard Plans*, prior to construction vehicles entering the roadway from locations that generate sediment track out on the roadway. Material used for stabilized construction entrance shall be free of extraneous materials that may cause or contribute to track out.

8-01.3(8) Street Cleaning

This section is revised to read:

Self-propelled pickup street sweepers shall be used to remove and collect dirt and other debris from the Roadway. The street sweeper shall effectively collect these materials and prevent them from being washed or blown off the Roadway or into waters of the State. Street sweepers shall not generate fugitive dust and shall be designed and operated in compliance with applicable air quality standards. Material collected by the street sweeper shall be disposed of in accordance with Section 2-03.3(7)C.

INFORMATIONAL COPY ONLY - NOT FOR BIDDING

When allowed by the Engineer, power broom sweepers may be used in non-environmentally sensitive areas. The broom sweeper shall sweep dirt and other debris from the roadway into the work area. The swept material shall be prevented from entering or washing into waters of the State.

Street washing with water will require the concurrence of the Engineer.

8-01.3(12) Compost Socks

The first two sentences of the first paragraph are revised to read:

Compost socks are used to disperse flow and sediment. Compost socks shall be installed as soon as construction will allow but before flow conditions create erosive flows or discharges from the site. Compost socks shall be installed prior to any mulching or compost placement.

8-01.3(13) Temporary Curb

The second to last sentence of the second paragraph is revised to read:

Temporary curbs shall be a minimum of 4 inches in height.

8-01.3(14) Temporary Pipe Slope Drain

The third and fourth paragraphs are revised to read:

The pipe fittings shall be water tight and the pipe secured to the slope with metal posts, wood stakes, sand bags, or as allowed by the Engineer.

The water shall be discharged to a stabilized conveyance, sediment trap, stormwater pond, rock splash pad, or vegetated strip, in a manner to prevent erosion and maintain water quality compliance.

The last paragraph is deleted.

8-01.3(15) Maintenance

This section is revised to read:

Erosion and sediment control BMPs shall be maintained or adaptively managed as required by the CSWGP until the Engineer determines they are no longer needed. When deficiencies in functional performance are identified, the deficiencies shall be rectified immediately.

The BMPs shall be inspected on the schedule outlined in Section 8-01.3(1)B for damage and sediment deposits. Damage to or undercutting of BMPs shall be repaired immediately.

In areas where the Contractor's activities have compromised the erosion control functions of the existing grasses, the Contractor shall overseed at no additional cost to the Contracting Agency.

The quarry spalls of construction entrances shall be refreshed, replaced, or screened to maintain voids between the spalls for collecting mud and dirt.

Unless otherwise specified, when the depth of accumulated sediment and debris reaches approximately ⅓ the height of the BMP the deposits shall be removed. Debris or contaminated sediment shall be disposed of in accordance with Section 2-03.3(7)C. Clean sediments may be stabilized on-site using BMPs as allowed by the Engineer.

INFORMATIONAL COPY ONLY - NOT FOR BIDDING

8-01.3(16) Removal

This section is revised to read:

The Contractor shall remove all temporary BMPs, all associated hardware and associated accumulated sediment deposition from the project limits prior to Physical Completion unless otherwise allowed by the Engineer. When the temporary BMP materials are made of natural plant fibers unaltered by synthetic materials the Engineer may allow leaving the BMP in place.

The Contractor shall remove BMPs and associated hardware in a way that minimizes soil disturbance. The Contractor shall permanently stabilize all bare and disturbed soil after removal of BMPs. If the installation and use of the erosion control BMPs have compacted or otherwise rendered the soil inhospitable to plant growth, such as construction entrances, the Contractor shall take measures to rehabilitate the soil to facilitate plant growth. This may include, but is not limited to, ripping the soil, incorporating soil amendments, or seeding with the specified seed.

At the request of the Contractor and at the sole discretion of the Engineer the CSWGP may be transferred back to the Contracting Agency. Approval of the Transfer of Coverage request will require the following:

1. All other Work required for Contract Completion has been completed.

2. All Work required for compliance with the CSWGP has been completed to the maximum extent possible. This includes removal of BMPs that are no longer needed and the site has undergone all Stabilization identified for meeting the requirements of Final Stabilization in the CSWGP.

3. An Equitable Adjustment change order for the cost of Work that has not been completed by the Contractor.

4. Submittal of the Washington State Department of Ecology Transfer of Coverage form (Ecology form ECY 020-87a) to the Engineer.

If the Engineer approves the transfer of coverage back to the Contracting Agency, the requirement in Section 1-07.5(3) for the Contractor's submittal of the Notice of Termination form to the Washington State Department of Ecology will not apply.

8-01.4 Measurement

This section's content is deleted and replaced with the following new subsections:

8-01.4(1) Lump Sum Bid for Project (No Unit Items)

When the Bid Proposal contains the item "Erosion Control and Water Pollution Prevention" there will be no measurement of unit or force account items for Work defined in Section 8-01 except as described in Sections 8-01.4(3) and 8-01.4(4). Also, except as described in Section 8-01.4(3), all of Sections 8-01.4(2) and 8-01.5(2) are deleted.

8-01.4(2) Item Bids

When the Proposal does not contain the items "Erosion Control and Water Pollution Prevention", Section 8-01.4(1) and 8-01.5(1) are deleted and the Bid Proposal will contain some or all of the following items measured as noted.

INFORMATIONAL COPY ONLY - NOT FOR BIDDING

ESC lead will be measured per day for each day that an inspection is made and a report is filed.

Biodegradable erosion control blanket and plastic covering will be measured by the square yard along the ground slope line of surface area covered and accepted.

Turbidity curtains will be measured by the linear foot along the ground line of the installed curtain.

Check dams will be measured per linear foot one time only along the ground line of the completed check dam. No additional measurement will be made for check dams that are required to be rehabilitated or replaced due to wear.

Stabilized construction entrances will be measured by the square yard by ground slope measurement for each entrance constructed.

Tire wash facilities will be measured per each for each tire wash installed.

Street cleaning will be measured by the hour for the actual time spent cleaning pavement, refilling with water, dumping and transport to and from cleaning locations within the project limits, as authorized by the Engineer. Time to mobilize the equipment to or from the project limits on which street cleaning is required will not be measured.

Inlet protections will be measured per each for each initial installation at a drainage structure.

Silt fence, gravel filter, compost berms and wood chip berms will be measured by the linear foot along the ground line of the completed barrier.

Wattles and compost socks will be measured by the linear foot.

Temporary curbs will be measured by the linear foot along the ground line of the completed installation.

Temporary pipe slope drains will be measured by the linear foot along the flow line of the pipe.

Coir logs will be measured by the linear foot along the ground line of the completed installation.

Outlet protections will be measured per each initial installation at an outlet location.

Tackifiers will be measure by the acre by ground slope measurement.

8-01.4(3) Reinstating Unit Items with Lump Sum Erosion Control and Water Pollution Prevention

The Contract Provisions may establish the project as lump sum, in accordance with Section 8-01.4(1) and also include one or more of the items included above in Section 8-01.4(2). When that occurs, the corresponding measurement provision in Section 8-01.4(2) is not deleted and the Work under that item will be measured as specified.

INFORMATIONAL COPY ONLY - NOT FOR BIDDING

8-01.4(4) Items not included with Lump Sum Erosion Control and Water Pollution Prevention

Compost blanket will be measured by the square yard by ground slope surface area covered and accepted.

Mulching will be measured by the acre by ground slope surface area covered and accepted.

Seeding, fertilizing, liming, mulching, and mowing, will be measured by the acre by ground slope measurement.

Seeding and fertilizing by hand will be measured by the square yard by ground slope measurement. No adjustment in area size will be made for the vegetation free zone around each plant.

Fencing will be measured by the linear foot along the ground line of the completed fence.

8-01.5 Payment

This section's content is deleted and replaced with the following new subsections:

8-01.5(1) Lump Sum Bid for Project (No Unit Items)

Payment will be made for the following Bid item when it is included in the Proposal:

"Erosion Control and Water Pollution Prevention", lump sum.

The lump sum Contract price for "Erosion Control and Water Pollution Prevention" shall be full pay to perform the Work as described in Section 8-01 except for costs compensated by Bid Proposal items inserted through Contract Provisions as described in Section 8-01.4(2). Progress payments for the lump sum item "Erosion Control and Water Pollution Prevention" will be made as follows:

1. The Contracting Agency will pay 15 percent of the bid amount for the initial set up for the item. Initial set up includes the following:

   a. Acceptance of the TESC Plan provided by the Contracting Agency or submittal of a new TESC Plan,

   b. Submittal of a schedule for the installation of the BMPs, and

   c. Identifying water quality sampling locations.

2. 70 percent of the bid amount will be paid in accordance with Section 1-09.9.

3. Once the project is physically complete and copies of the all reports submitted to the Washington State Department of Ecology have been submitted to the Engineer, and, if applicable, transference of the CSWGP back to the Contracting Agency is complete, the remaining 15 percent of the bid amount shall be paid in accordance with Section 1-09.9.

8-01.5(2) Item Bids

"ESC Lead", per day.

"Turbidity Curtain", per linear foot.

INFORMATIONAL COPY ONLY - NOT FOR BIDDING

"Biodegradable Erosion Control Blanket", per square yard.

"Plastic Covering", per square yard.

"Check Dam", per linear foot.

"Inlet Protection", per each.

"Gravel Filter Berm", per linear foot.

"Stabilized Construction Entrance", per square yard.

"Street Cleaning", per hour.

"Silt Fence", per linear foot.

"Wood Chip Berm", per linear foot.

"Compost Berm", per linear foot.

"Wattle", per linear foot.

"Compost Sock", per linear foot.

"Coir Log", per linear foot.

"Temporary Curb", per linear foot.

"Temporary Pipe Slope Drain", per linear foot.

"Temporary Seeding", per acre.

"Outlet Protection", per each.

"Tackifier", per acre.

"Erosion/Water Pollution Control", by force account as provided in Section 1-09.6.

Maintenance and removal of erosion and water pollution control devices including removal and disposal of sediment, stabilization and rehabilitation of soil disturbed by these activities, and any additional Work deemed necessary by the Engineer to control erosion and water pollution will be paid by force account in accordance with Section 1-09.6.

To provide a common Proposal for all Bidders, the Contracting Agency has entered an amount in the Proposal to become a part of the Contractor's total Bid.

8-01.5(3) Reinstating Unit Items with Lump Sum Erosion Control and Water Pollution Prevention

The Contract may establish the project as lump sum, in accordance with Section 8-01.4(1) and also reinstate the measurement of one or more of the items described in Section 8-01.4(2), except for Erosion/Water Pollution Control, by force account. When that occurs, the corresponding payment provision in Section 8-01.5(2) is not deleted and the Work under that item will be paid as specified.

INFORMATIONAL COPY ONLY - NOT FOR BIDDING

8-01.5(4) Items not included with Lump Sum Erosion Control and Water Pollution Prevention

Payment will be made for each of the following Bid items when they are included in the Proposal:

"Compost Blanket", per square yard.

"Mulching", per acre

"Mulching with PAM", per acre

"Mulching with Short-Term Mulch", per acre.

"Mulching with Moderate-Term Mulch", per acre.

"Mulching with Long-Term Mulch", per acre.

"Seeding, Fertilizing and Mulching", per acre.

"Seeding and Fertilizing", per acre.

"Seeding and Fertilizing by Hand", per square yard.

"Second Application of Fertilizer", per acre.

"Liming", per acre.

"Mowing", per acre.

"Seeding and Mulching", per acre.

"High Visibility Fence", per linear foot.

Section 8-21, Permanent Signing
January 7 2019

8-21.3(5) Sign Relocation

The second sentence of the first paragraph is revised to read:

Where the existing sign Structure is mounted on concrete pedestals, the Contractor shall remove the pedestal to a minimum of 2 feet below finished grade and backfill the remaining hole with material similar to that surrounding the hole.

8-21.3(9)F Foundations

Item number 3 of the twelfth paragraph is supplemented with the following new sentence:

Class 4000P concrete for roadside sign structures does not require air entrainment.

INFORMATIONAL COPY ONLY - NOT FOR BIDDING

Section 9-00, Definitions and Tests
January 7, 2019

9-00.4 Sieves for Testing Purposes

This section is revised to read:

> Test sieves shall be made of either: (1) woven wire cloth conforming to ASTM E11, or (2) square-hole, perforated plates conforming to ASTM E323.

9-00.7 Galvanized Hardware, AASHTO M 232

The first sentence is revised to read:

> An acceptable alternate to hot-dip galvanizing in accordance with AASHTO M 232 will be zinc coatings mechanically deposited in accordance with ASTM B695, providing the minimum thickness of zinc coating is not less than that specified in AASHTO M 232, and the process will not produce hydrogen embrittlement in the base metal.

Section 9-03, Aggregates
January 7, 2019

9-03.1 Aggregates for Portland Cement Concrete

This section's title is revised to read:

> **Aggregates for Concrete**

9-03.1(1) General Requirements

The first two sentences of the first paragraph are revised to read:

> Concrete aggregates shall be manufactured from ledge rock, talus, or sand and gravel in accordance with the provisions of Section 3-01. Reclaimed aggregate may be used if it complies with the specifications for concrete.

The second paragraph (up until the colon) is revised to read:

> Aggregates for concrete shall meet the following test requirements:

The second sentence of the second to last paragraph is revised to read:

> The Contractor shall submit test results according to ASTM C1567 through the Engineer to the State Materials Laboratory that demonstrate that the proposed fly ash when used with the proposed aggregates and cement will control the potential expansion to 0.20 percent or less before the fly ash and aggregate sources may be used in concrete.

9-03.1(2) Fine Aggregate for Portland Cement Concrete

This section's title is revised to read:

> **Fine Aggregate for Concrete**

9-03.1(4) Coarse Aggregate for Portland Cement Concrete

This section's title is revised to read:

> **Coarse Aggregate for Concrete**

INFORMATIONAL COPY ONLY - NOT FOR BIDDING

9-03.1(4)C Grading

The first paragraph (up until the colon) is revised to read:

> Coarse aggregate for concrete when separated by means of laboratory sieves shall conform to one or more of the following gradings as called for elsewhere in these Specifications, Special Provisions, or in the Plans:

9-03.1(5) Combined Aggregate Gradation for Portland Cement Concrete

This section's title is revised to read:

> **Combined Aggregate Gradation for Concrete**

9-03.1(5)B Grading

In the last paragraph, "WSDOT FOP for WAQTC/AASHTO T 27/T 11" is revised to read "FOP for WAQTC/AASHTO T 27/T 11".

9-03.2 Aggregate for Job-Mixed Portland Cement Mortar

This section's title is revised to read:

> **Aggregate for Job-Mixed Portland Cement or Blended Hydraulic Cement Mortar**

The first sentence of the first paragraph is revised to read:

> Fine aggregate for portland cement or blended hydraulic cement mortar shall consist of sand or other inert materials, or combinations thereof, accepted by the Engineer, having hard, strong, durable particles free from adherent coating.

9-03.4(1) General Requirements

The first paragraph (up until the colon) is revised to read:

> Aggregate for bituminous surface treatment shall be manufactured from ledge rock, talus, or gravel, in accordance with Section 3-01. Aggregates for Bituminous Surface Treatment shall meet the following test requirements:

9-03.8(1) General Requirements

The first paragraph (up until the colon) is revised to read:

> Aggregates for Hot Mix Asphalt shall meet the following test requirements:

9-03.8(2) HMA Test Requirements

The two tables in the second paragraph are replaced with the following three tables:

Mix Criteria	HMA Class							
	⅜ inch		½ inch		¾ inch		1 inch	
	Min.	Max.	Min.	Max.	Min.	Max.	Min.	Max.
Voids in Mineral Aggregate (VMA), %	15.0		14.0		13.0		12.0	
Voids Filled With Asphalt (VFA), %								
ESAL's (millions)	VFA							
< 0.3	70	80	70	80	70	80	67	80
0.3 to < 3	65	78	65	78	65	78	65	78
≥ 3	73	76	65	75	65	75	65	75

INFORMATIONAL COPY ONLY - NOT FOR BIDDING

Dust/Asphalt Ratio	0.6	1.6	0.6	1.6	0.6	1.6	0.6	1.6

Test Method	ESAL's (millions)	Number of Passes
Hamburg Wheel-Track Testing, FOP for AASHTO T 324 Minimum Number of Passes with no Stripping Inflection Point and Maximum Rut Depth of 10mm	< 0.3	10,000
	0.3 to < 3	12,500
	≥ 3	15,000
Indirect Tensile (IDT) Strength (psi) of Bituminous Materials FOP for ASTM D6931		175 Maximum

	ESAL's (millions)	N initial	N design	N maximum
% Gmm	< 0.3	≤ 91.5	96.0	≤ 98.0
	0.3 to < 3	≤ 90.5	96.0	≤ 98.0
	≥ 3	≤ 89.0	96.0	≤ 98.0
Gyratory Compaction (number of gyrations)	< 0.3	6	50	75
	0.3 to < 3	7	75	115
	> 3	8	100	160

9-03.8(7) HMA Tolerances and Adjustments

In the table in item number 1, the fifth row is revised to read:

Asphalt binder	-0.4% to 0.5%		±0.7%

In the table in item number 1, the following new row is inserted before the last row:

Voids in Mineral Aggregate, VMA	-1.0%		

9-03.9(1) Ballast

The second paragraph (up until the colon) is revised to read:

Aggregates for ballast shall meet the following test requirements:

9-03.14(4) Gravel Borrow for Structural Earth Wall

The second sentence of the first paragraph is revised to read:

The material shall be substantially free of shale or other soft, poor durability particles, and shall not contain recycled materials, such as glass, shredded tires, concrete rubble, or asphaltic concrete rubble.

9-03.21(1)B Recycled Concrete Aggregate Approval and Acceptance

The first sentence of the second paragraph is revised to read:

Recycled concrete aggregate may be used as coarse aggregate or blended with coarse aggregate for Commercial Concrete, Class 3000 concrete, or Cement Concrete Pavement.

Item number 4 of the second paragraph is revised to read:

4. For Cement Concrete Pavement mix designs using recycled concrete aggregates, the Contractor shall submit evidence that ASR mitigating measures control expansion in accordance with Section 9-03.1(1).

This section is supplemented with the following new subsection:

INFORMATIONAL COPY ONLY - NOT FOR BIDDING

9-03.21(1)B1 Recycled Concrete Aggregate Approval and Acceptance

Recycled concrete aggregate may be approved through a three tiered system that consists of the following:

Tier 1	
Approval Requirements	Approval of the Reclamation Facility is not required.
Acceptance Requirements	Certification of toxicity characteristics in accordance with Section 9-03.21(1). Field acceptance testing in accordance with Section 3-04.
Approved to provide the following Aggregate Materials:	
9-03.10 Aggregate for Gravel Base 9-03.12(1)B Gravel Backfill for Foundations Class B 9-03.12(2) Gravel Backfill for Walls 9-03.12(3) Gravel Backfill for Pipe Zone Bedding 9-03.14(1) Gravel Borrow 9-03.14(2) Select Borrow 9-03.14(2) Select Borrow (greater than 3 feet below subgrade and side slope) 9-03.14(3) Common Borrow 9-03.14(3) Common Borrow (greater than 3 feet below subgrade and side slope) 9-03.17 Foundation Material Class A and Class B 9-03.18 Foundation Material Class C 9-03.19 Bank Run Gravel for Trench Backfill	

Tier 2	
Approval Requirements	The Reclamation Facility shall have a Quality Control Plan (QCP) in accordance with WSDOT QC 9 "Standard Practice for Approval of Reclamation Facilities of WSDOT Recycled Concrete and Returned Concrete". The Reclamation Facility's QCP shall be submitted and approved by the WSDOT State Materials Laboratory. Once accepted, any changes to the QCP will require a new QCP to be submitted for acceptance. Evaluation of aggregate source properties (LA Wear and Degradation) for the recycled concrete aggregate is not required.
Acceptance Requirements	Certification of toxicity characteristics in accordance with Section 9-03.21(1), required if requested. Field acceptance testing in accordance with Section 3-04 is required. Provide certification in accordance with WSDOT QC 9 for every lot. A lot shall be no larger than 10,000 tons.
Approved to provide the following Aggregate Materials:	
Tier 1 aggregate materials 9-03.1 Coarse Aggregate for Commercial Concrete or Concrete class 3000 9-03.9(1) Ballast 9-03.9(2) Permeable Ballast 9-03.9(3) Crushed Surfacing 9-03.12(1)A Gravel Backfill for Foundations Class A	

Tier 3	
Approval Requirements	The Reclamation Facility shall have a Quality Control

INFORMATIONAL COPY ONLY - NOT FOR BIDDING

	Plan (QCP) in accordance with WSDOT QC 10 "Standard Practice for Approval of Reclamation Facilities of Recycled Concrete Aggregates from Stockpiles of Unknown Sources". The Reclamation Facility's QCP shall be submitted and approved by the WSDOT State Materials Laboratory. Once accepted, any changes to the QCP will require a new QCP to be submitted for acceptance. Evaluation of aggregate source properties (LA Wear and Degradation) for the recycled concrete aggregate is required.
Acceptance Requirements	Certification of toxicity characteristics in accordance with Section 9-03.21(1) is required. Field acceptance testing in accordance with Section 3-04 is required. Provide certification in accordance with WSDOT QC 10 for every lot. A lot shall be no larger than 10,000 tons
Approved to provide the following Aggregate Materials:	
Tier 1 aggregate materials 9-03.1 Coarse Aggregate for Commercial Concrete or Concrete class 3000 9-03.9(1) Ballast 9-03.9(2) Permeable Ballast 9-03.9(3) Crushed Surfacing 9-03.12(1)A Gravel Backfill for Foundations Class A	

For Reclamation Facilities that do not participate in Tier 2 and Tier 3, approval of recycled concrete aggregate will be in accordance with Section 9-03.21(1), and acceptance will be in accordance with Section 3-04.

9-03.21(1)E Table on Maximum Allowable percent (By Weight) of Recycled Material

"Portland Cement" is deleted from the first two rows in the table.

The following new row is inserted after the second row:

Coarse Aggregate for Concrete Pavement	9-03.1(4)	0	100	0	0

The first column of the fourth row (after the preceding Amendment is applied) is revised to read:

Coarse Aggregate for Commercial Concrete and Class 3000 Concrete

Section 9-06, Structural Steel and Related Materials
January 7, 2019

9-06.5 Bolts

This section's title is revised to read:

Bolts and Rods

9-06.5(4) Anchor Bolts

This section, including title, is revised to read:

INFORMATIONAL COPY ONLY - NOT FOR BIDDING

9-06.5(4) Anchor Bolts and Anchor Rods

Anchor bolts and anchor rods shall meet the requirements of ASTM F1554 and, unless otherwise specified, shall be Grade 105 and shall conform to Supplemental Requirements S2, S3, and S4.

Nuts for ASTM F1554 Grade 105 black anchor bolts and anchor rods shall conform to ASTM A563, Grade D or DH. Nuts for ASTM F1554 Grade 105 galvanized anchor bolts and anchor rods shall conform to either ASTM A563, Grade DH, or AASHTO M292, Grade 2H, and shall conform to the overtapping, lubrication, and rotational testing requirements in Section 9-06.5(3). Nuts for ASTM F1554 Grade 36 or 55 black or galvanized anchor bolts and anchor rods shall conform to ASTM A563, Grade A or DH. Washers shall conform to ASTM F436.

The bolts and rods shall be tested by the manufacturer in accordance with the requirements of the pertinent Specification and as specified in these Specifications. Anchor bolts, anchor rods, nuts, and washers shall be inspected prior to shipping to the project site. The Contractor shall submit to the Engineer for acceptance a Manufacturer's Certificate of Compliance for the anchor bolts, anchor rods, nuts, and washers, as defined in Section 1-06.3. If the Engineer deems it appropriate, the Contractor shall provide a sample of the anchor bolt, anchor rod, nut, and washer for testing.

All bolts, rods, nuts, and washers shall be marked and identified as required in the pertinent Specification.

9-06.15 Welded Shear Connectors

The third paragraph is revised to read:

Mechanical properties shall be determined in accordance with AASHTO T 244.

9-06.17 Vacant

This section, including title, is revised to read:

9-06.17 Noise Barrier Wall Access Door

Access door frames shall be formed of 14-gauge steel to the size and dimensions shown in the Plans. The access door frame head and jamb members shall be mitered, securely welded, and ground smooth. Each head shall have two anchors and each jamb shall have three anchors. The hinges shall be reinforced with ¼-inch by 12-inch plate, width equal to the full inside width of the frame.

Access doors shall be full flush 1-¾-inch thick seamless doors with a polystyrene core. Door faces shall be constructed with smooth seamless 14-gauge roller-levered, cold-rolled steel sheet conforming to ASTM A 792 Type SS, Grade 33 minimum, Coating Designation AZ55 minimum. The vertical edges shall be neat interlocked hemmed edge seam. The top and bottom of the door shall be enclosed with 14-gauge channels. Mortise and reinforcement for locks and hinges shall be 10-gauge steel. Welded top cap shall be ground and filled for exterior applications. The bottom channel shall have weep holes.

Each access door shall have three hinges. Access door hinges shall be ASTM A 276 Type 316 stainless steel, 4-½-inches square, with stainless steel ball bearing and non-removable pins.

Each access door shall have two pull plates. The pull plates shall be ASTM A 240 Type 316 stainless steel, with a grip handle of one-inch diameter and 8 to 10-inches in length.

INFORMATIONAL COPY ONLY - NOT FOR BIDDING

The door assembly shall be fabricated and assembled as a complete unit including all hardware specified prior to shipment.

9-06.18 Metal Bridge Railing

The second sentence of the first paragraph is revised to read:

Steel used for metal railings, when galvanized after fabrication in accordance with AASHTO M111, shall have a controlled silicon content of either 0.00 to 0.06 percent or 0.15 to 0.25 percent.

Section 9-28, Signing Materials and Fabrication
April 2, 2018

9-28.10 Vacant

This section, including title, is revised to read:

9-28.10 Digital Printing

Transparent and opaque durable inks used in digital printed sign messages shall be as recommended by the manufacturer. When properly applied, digital printed colors shall have a warranty life of the base retroreflective sign sheeting. Digital applied colors shall present a smooth surface, free from foreign material, and all messages and borders shall be clear and sharp. Digital printed signs shall conform to 70% of the retroreflective minimum values established for its type and color. Digitally printed signs shall meet the daytime color and luminance, and nighttime color requirements of ASTM D 4956. No variations in color or overlapping of colors will be permitted. Digital printed permanent traffic signs shall have an integrated engineered match component clear protective overlay recommended by the sheeting manufacturer applied to the entire face of the sign. On Temporary construction/maintenance signs printed with black ink only, the protective overlay film is optional, as long as the finished sign has a warranty of a minimum of three years from sign sheeting manufacturer.

All digital printed traffic control signs shall be an integrated engineered match component system. The integrated engineered match component system shall consist of retroreflective sheeting, durable ink(s), and clear overlay film all from the same manufacturer applied to aluminum substrate conforming to Section 9-28.8.

The sign fabricator shall use an approved integrated engineered match component system as listed on the Qualified Products List (QPL). Each approved digital printer shall only use the compatible retroreflective sign sheeting manufacturer's engineered match component system products.

Each retroreflective sign sheeting manufacturer/integrated engineered match component system listed on the QPL shall certify a department approved sign fabricator is approved to operate their compatible digital printer. The sign fabricator shall re-certify annually with the retroreflective sign manufacturer to ensure their digital printer is still meeting manufacturer's specifications for traffic control signs. Documentation of each re-certification shall be submitted to the QPL Engineer annually.

9-28.11 Hardware

The last paragraph is revised to read:

INFORMATIONAL COPY ONLY - NOT FOR BIDDING

All steel parts shall be galvanized in accordance with AASHTO M111. Steel bolts and related connecting hardware shall be galvanized in accordance with ASTM F 2329.

9-28.14(2) Steel Structures and Posts

The first sentence of the third paragraph is revised to read:

Anchor rods for sign bridge and cantilever sign structure foundations shall conform to Section 9-06.5(4), including Supplemental Requirement S4 tested at -20°F.

In the second sentence of the fourth paragraph, "AASHTO M232" is revised to read "ASTM F 2329".

The first sentence of the fifth paragraph is revised to read:

Except as otherwise noted, steel used for sign structures and posts shall have a controlled silicon content of either 0.00 to 0.06 percent or 0.15 to 0.25 percent.

The last sentence of the last paragraph is revised to read:

If such modifications are contemplated, the Contractor shall submit a Type 2 Working Drawing of the proposed modifications.

INFORMATIONAL COPY ONLY - NOT FOR BIDDING

INTRODUCTION TO THE SPECIAL PROVISIONS

The work on this project shall be accomplished in accordance with the *Standard Specifications for Road, Bridge and Municipal Construction*, 2018 edition, as issued by the Washington State Department of Transportation (WSDOT) and the American Public Works Association (APWA), Washington State Chapter (hereafter "Standard Specifications"). The Standard Specifications, as modified or supplemented by the Amendments to the Standard Specifications and these Special Provisions, all of which are made a part of the Contract Documents, shall govern all of the Work.

These Special Provisions are made up of both General Special Provisions (GSPs) from various sources, which may have project-specific fill-ins; and project-specific Special Provisions. Each Provision either supplements, modifies, or replaces the comparable Standard Specification, or is a new Provision. The deletion, amendment, alteration, or addition to any subsection or portion of the Standard Specifications is meant to pertain only to that particular portion of the section, and in no way should it be interpreted that the balance of the section does not apply.

The project-specific Special Provisions are not labeled as such. The GSPs are labeled under the headers of each GSP, with the effective date of the GSP and its source. For example:

(March 8, 2013 APWA GSP)
(April 1, 2013 WSDOT GSP)

Also incorporated into the Contract Documents by reference are:

- *Manual on Uniform Traffic Control Devices for Streets and Highways*, currently adopted edition, with Washington State modifications, if any
- *Standard Plans for Road, Bridge and Municipal Construction*, WSDOT/APWA, current edition

Contractor shall obtain copies of these publications, at Contractor's own expense.

DIVISION 1 GENERAL REQUIREMENTS

Description Of Work

(******)
This contract provides for the installation of Traffic Control Devices, County Wide, on two lane county roads in Grant County, WA, and includes removing existing signs, installation of signs, project temporary traffic control and other work, all in accordance with the attached Contract Plans, these Contract Provisions and the Standard Specifications.

1-01 Definitions And Terms

INFORMATIONAL COPY ONLY - NOT FOR BIDDING

1-01.3 Definitions

(January 4, 2016 APWA GSP)

Delete the heading **Completion Dates** and the three paragraphs that follow it, and replace them with the following:

Dates

Bid Opening Date
The date on which the Contracting Agency publicly opens and reads the Bids.

Award Date
The date of the formal decision of the Contracting Agency to accept the lowest responsible and responsive Bidder for the Work.

Contract Execution Date
The date the Contracting Agency officially binds the Agency to the Contract.

Notice to Proceed Date
The date stated in the Notice to Proceed on which the Contract time begins.

Substantial Completion Date
The day the Engineer determines the Contracting Agency has full and unrestricted use and benefit of the facilities, both from the operational and safety standpoint, any remaining traffic disruptions will be rare and brief, and only minor incidental work, replacement of temporary substitute facilities, plant establishment periods, or correction or repair remains for the Physical Completion of the total Contract.

Physical Completion Date
The day all of the Work is physically completed on the project. All documentation required by the Contract and required by law does not necessarily need to be furnished by the Contractor by this date.

Completion Date
The day all the Work specified in the Contract is completed and all the obligations of the Contractor under the contract are fulfilled by the Contractor. All documentation required by the Contract and required by law must be furnished by the Contractor before establishment of this date.

Final Acceptance Date
The date on which the Contracting Agency accepts the Work as complete.

Supplement this Section with the following:

All references in the Standard Specifications, Amendments, or WSDOT General Special Provisions, to the terms "Department of Transportation", "Washington State Transportation Commission", "Commission", "Secretary of Transportation", "Secretary", "Headquarters", and "State Treasurer" shall be revised to read "Contracting Agency".

All references to the terms "State" or "state" shall be revised to read "Contracting Agency" unless the reference is to an administrative agency of the State of Washington, a State statute or regulation, or the context reasonably indicates otherwise.

All references to "State Materials Laboratory" shall be revised to read "Contracting Agency designated location".

INFORMATIONAL COPY ONLY - NOT FOR BIDDING

All references to "final contract voucher certification" shall be interpreted to mean the Contracting Agency form(s) by which final payment is authorized, and final completion and acceptance granted.

Additive

A supplemental unit of work or group of bid items, identified separately in the Bid Proposal, which may, at the discretion of the Contracting Agency, be awarded in addition to the base bid.

Alternate

One of two or more units of work or groups of bid items, identified separately in the Bid Proposal, from which the Contracting Agency may make a choice between different methods or material of construction for performing the same work.

Business Day

A business day is any day from Monday through Friday except holidays as listed in Section 1-08.5.

Contract Bond

The definition in the Standard Specifications for "Contract Bond" applies to whatever bond form(s) are required by the Contract Documents, which may be a combination of a Payment Bond and a Performance Bond.

Contract Documents

See definition for "Contract".

Contract Time

The period of time established by the terms and conditions of the Contract within which the Work must be physically completed.

Notice of Award

The written notice from the Contracting Agency to the successful Bidder signifying the Contracting Agency's acceptance of the Bid Proposal.

Notice to Proceed

The written notice from the Contracting Agency or Engineer to the Contractor authorizing and directing the Contractor to proceed with the Work and establishing the date on which the Contract time begins.

Traffic

Both vehicular and non-vehicular traffic, such as pedestrians, bicyclists, wheelchairs, and equestrian traffic.

1-02 BID PROCEDURES AND CONDITIONS

1-02.1 Prequalification of Bidders

Delete this section and replace it with the following:

1-02.1 Qualifications of Bidder

(January 24, 2011 APWA GSP)

INFORMATIONAL COPY ONLY - NOT FOR BIDDING

Before award of a public works contract, a bidder must meet at least the minimum qualifications of RCW 39.04.350(1) to be considered a responsible bidder and qualified to be awarded a public works project.

1-02.2 Plans and Specifications

(June 27, 2011 APWA GSP)

Delete this section and replace it with the following:

Information as to where Bid Documents can be obtained or reviewed can be found in the Call for Bids (Advertisement for Bids) for the work.

After award of the contract, plans and specifications will be issued to the Contractor at no cost as detailed below:

To Prime Contractor	No. of Sets	Basis of Distribution
Reduced plans (11" x 17")	4	Furnished automatically upon award.
Contract Provisions	4	Furnished automatically upon award.
Large plans (e.g., 22" x 34")	0	Furnished only upon request.

Additional plans and Contract Provisions may be obtained by the Contractor from the source stated in the Call for Bids, at the Contractor's own expense.

1-02.4(1) General

(August 15, 2016 APWA GSP Option A)

The first sentence of the last paragraph is revised to read:

Any prospective Bidder desiring an explanation or interpretation of the Bid Documents, must request the explanation or interpretation in writing soon enough to allow a written reply to reach all prospective Bidders before the submission of their Bids.

1-02.5 Proposal Forms

(July 31, 2017 APWA GSP)

Delete this section and replace it with the following:

The Proposal Form will identify the project and its location and describe the work. It will also list estimated quantities, units of measurement, the items of work, and the materials to be

INFORMATIONAL COPY ONLY - NOT FOR BIDDING

furnished at the unit bid prices. The bidder shall complete spaces on the proposal form that call for, but are not limited to, unit prices; extensions; summations; the total bid amount; signatures; date; and, where applicable, retail sales taxes and acknowledgment of addenda; the bidder's name, address, telephone number, and signature; the bidder's UDBE/DBE/M/WBE commitment, if applicable; a State of Washington Contractor's Registration Number; and a Business License Number, if applicable. Bids shall be completed by typing or shall be printed in ink by hand, preferably in black ink. The required certifications are included as part of the Proposal Form.

The Contracting Agency reserves the right to arrange the proposal forms with alternates and additives, if such be to the advantage of the Contracting Agency. The bidder shall bid on all alternates and additives set forth in the Proposal Form unless otherwise specified.

1-02.6 Preparation of Proposal
(July 11, 2018 APWA GSP)

Supplement the second paragraph with the following:

4. If a minimum bid amount has been established for any item, the unit or lump sum price must equal or exceed the minimum amount stated.
5. Any correction to a bid made by interlineation, alteration, or erasure, shall be initialed by the signer of the bid.

Delete the last two paragraphs, and replace them with the following:

If no Subcontractor is listed, the Bidder acknowledges that it does not intend to use any Subcontractor to perform those items of work.

The Bidder shall submit with their Bid a completed Contractor Certification Wage Law Compliance form, provided by the Contracting Agency. Failure to return this certification as part of the Bid Proposal package will make this Bid Nonresponsive and ineligible for Award. A Contractor Certification of Wage Law Compliance form is included in the Proposal Forms.

The Bidder shall make no stipulation on the Bid Form, nor qualify the bid in any manner.

A bid by a corporation shall be executed in the corporate name, by the president or a vice president (or other corporate officer accompanied by evidence of authority to sign).

A bid by a partnership shall be executed in the partnership name, and signed by a partner. A copy of the partnership agreement shall be submitted with the Bid Form if any UDBE requirements are to be satisfied through such an agreement.

A bid by a joint venture shall be executed in the joint venture name and signed by a member of the joint venture. A copy of the joint venture agreement shall be submitted with the Bid Form if any UDBE requirements are to be satisfied through such an agreement.

(August 2, 2004)
The fifth and sixth paragraphs of Section 1-02.6 are deleted

1-02.7 Bid Deposit
(March 8, 2013 APWA GSP)

Supplement this section with the following:

INFORMATIONAL COPY ONLY - NOT FOR BIDDING

Bid bonds shall contain the following:

1. Contracting Agency-assigned number for the project;
2. Name of the project;
3. The Contracting Agency named as obligee;
4. The amount of the bid bond stated either as a dollar figure or as a percentage which represents five percent of the maximum bid amount that could be awarded;
5. Signature of the bidder's officer empowered to sign official statements. The signature of the person authorized to submit the bid should agree with the signature on the bond, and the title of the person must accompany the said signature;
6. The signature of the surety's officer empowered to sign the bond and the power of attorney.

If so stated in the Contract Provisions, bidder must use the bond form included in the Contract Provisions.

If so stated in the Contract Provisions, cash will not be accepted for a bid deposit.

1-02.9 Delivery of Proposal
(May 17, 2018 APWA GSP, Option A)

Delete this section and replace it with the following:

Each Proposal shall be submitted in a sealed envelope, with the Project Name and Project Number as stated in the Call for Bids clearly marked on the outside of the envelope, or as otherwise required in the Bid Documents, to ensure proper handling and delivery.

To be considered responsive on a FHWA-funded project, the Bidder may be required to submit the following items, as required by Section 1-02.6:

- UDBE Written Confirmation Document from each UDBE firm listed on the Bidder's completed UDBE Utilization Certification (WSDOT 272-056U)
- Good Faith Effort (GFE) Documentation

These documents, if applicable, shall be received either with the Bid Proposal or as a supplement to the Bid. These documents shall be received **no later than 24 hours** (not including Saturdays, Sundays and Holidays) after the time for delivery of the Bid Proposal.

If submitted after the Bid Proposal is due, the document(s) must be submitted in a sealed envelope labeled the same as for the Proposal, with "Supplemental Information" added. All other information required to be submitted with the Bid Proposal must be submitted with the Bid Proposal itself, at the time stated in the Call for Bids.

The Contracting Agency will not open or consider any Bid Proposal that is received after the time specified in the Call for Bids for receipt of Bid Proposals, or received in a location other than that specified in the Call for Bids. The Contracting Agency will not open or consider any "Supplemental Information" (UDBE confirmations, or GFE documentation) that is received after the time specified above, or received in a location other than that specified in the Call for Bids.

1-02.10 Withdrawing, Revising, or Supplementing Proposal
(July 23, 2015 APWA GSP)

INFORMATIONAL COPY ONLY - NOT FOR BIDDING

Delete this section, and replace it with the following:

After submitting a physical Bid Proposal to the Contracting Agency, the Bidder may withdraw, revise, or supplement it if:

1. The Bidder submits a written request signed by an authorized person and physically delivers it to the place designated for receipt of Bid Proposals, and
2. The Contracting Agency receives the request before the time set for receipt of Bid Proposals, and
3. The revised or supplemented Bid Proposal (if any) is received by the Contracting Agency before the time set for receipt of Bid Proposals.

If the Bidder's request to withdraw, revise, or supplement its Bid Proposal is received before the time set for receipt of Bid Proposals, the Contracting Agency will return the unopened Proposal package to the Bidder. The Bidder must then submit the revised or supplemented package in its entirety. If the Bidder does not submit a revised or supplemented package, then its bid shall be considered withdrawn.

Late revised or supplemented Bid Proposals or late withdrawal requests will be date recorded by the Contracting Agency and returned unopened. Mailed, emailed, or faxed requests to withdraw, revise, or supplement a Bid Proposal are not acceptable.

1-02.12 Public Opening Of Proposals

Section 1-02.12 is supplemented with the following:

(******)
Date Of Opening Bids
Sealed bids are to be received at the following location prior to the time specified:

The Office of the Board of County Commissioners, Grant County Courthouse, Room 207, 35 C St. NW, P.O. Box 37, Ephrata, WA 98823

The bid opening date for this project is **February 19, 2019**. Bids received will be publicly opened and read after **1:30 P.M.** Pacific Time on this date.

1-02.13 Irregular Proposals

(June 20, 2017 APWA GSP)

Delete this section and replace it with the following:

1. A Proposal will be considered irregular and will be rejected if:
   a. The Bidder is not prequalified when so required;
   b. The authorized Proposal form furnished by the Contracting Agency is not used or is altered;
   c. The completed Proposal form contains any unauthorized additions, deletions, alternate Bids, or conditions;
   d. The Bidder adds provisions reserving the right to reject or accept the award, or enter into the Contract;
   e. A price per unit cannot be determined from the Bid Proposal;
   f. The Proposal form is not properly executed;

INFORMATIONAL COPY ONLY - NOT FOR BIDDING

g. The Bidder fails to submit or properly complete a Subcontractor list, if applicable, as required in Section 1-02.6;

h. The Bidder fails to submit or properly complete an Underutilized Disadvantaged Business Enterprise Certification, if applicable, as required in Section 1-02.6;

i. The Bidder fails to submit written confirmation from each UDBE firm listed on the Bidder's completed UDBE Utilization Certification that they are in agreement with the bidder's UDBE participation commitment, if applicable, as required in Section 1-02.6, or if the written confirmation that is submitted fails to meet the requirements of the Special Provisions;

j The Bidder fails to submit UDBE Good Faith Effort documentation, if applicable, as required in Section 1-02.6, or if the documentation that is submitted fails to demonstrate that a Good Faith Effort to meet the Condition of Award was made;

k. The Bid Proposal does not constitute a definite and unqualified offer to meet the material terms of the Bid invitation; or

l. More than one Proposal is submitted for the same project from a Bidder under the same or different names.

2. A Proposal may be considered irregular and may be rejected if:

a. The Proposal does not include a unit price for every Bid item;

b. Any of the unit prices are excessively unbalanced (either above or below the amount of a reasonable Bid) to the potential detriment of the Contracting Agency;

c. Receipt of Addenda is not acknowledged;

d. A member of a joint venture or partnership and the joint venture or partnership submit Proposals for the same project (in such an instance, both Bids may be rejected); or

e. If Proposal form entries are not made in ink.

1-02.14 Disqualification of Bidders

(May 17, 2018 APWA GSP, Option A)

Delete this section and replace it with the following:

A Bidder will be deemed not responsible if the Bidder does not meet the mandatory bidder responsibility criteria in RCW 39.04.350(1), as amended.

The Contracting Agency will verify that the Bidder meets the mandatory bidder responsibility criteria in RCW 39.04.350(1). To assess bidder responsibility, the Contracting Agency reserves the right to request documentation as needed from the Bidder and third parties concerning the Bidder's compliance with the mandatory bidder responsibility criteria.

If the Contracting Agency determines the Bidder does not meet the mandatory bidder responsibility criteria in RCW 39.04.350(1) and is therefore not a responsible Bidder, the Contracting Agency shall notify the Bidder in writing, with the reasons for its determination. If the Bidder disagrees with this determination, it may appeal the determination within two (2) business days of the Contracting Agency's determination by presenting its appeal and

INFORMATIONAL COPY ONLY - NOT FOR BIDDING

any additional information to the Contracting Agency. The Contracting Agency will consider the appeal and any additional information before issuing its final determination. If the final determination affirms that the Bidder is not responsible, the Contracting Agency will not execute a contract with any other Bidder until at least two business days after the Bidder determined to be not responsible has received the Contracting Agency's final determination.

1-02.15 Pre Award Information
(August 14, 2013 APWA GSP)

Revise this section to read:

Before awarding any contract, the Contracting Agency may require one or more of these items or actions of the apparent lowest responsible bidder:

1. A complete statement of the origin, composition, and manufacture of any or all materials to be used,
2. Samples of these materials for quality and fitness tests,
3. A progress schedule (in a form the Contracting Agency requires) showing the order of and time required for the various phases of the work,
4. A breakdown of costs assigned to any bid item,
5. Attendance at a conference with the Engineer or representatives of the Engineer,
6. Obtain, and furnish a copy of, a business license to do business in the city or county where the work is located.
7. Any other information or action taken that is deemed necessary to ensure that the bidder is the lowest responsible bidder.

1-03 Award And Execution Of Contract

1-03.1 Consideration of Bids
(January 23, 2006 APWA GSP)

Revise the first paragraph to read:

After opening and reading proposals, the Contracting Agency will check them for correctness of extensions of the prices per unit and the total price. If a discrepancy exists between the price per unit and the extended amount of any bid item, the price per unit will control. If a minimum bid amount has been established for any item and the bidder's unit or lump sum price is less than the minimum specified amount, the Contracting Agency will unilaterally revise the unit or lump sum price, to the minimum specified amount and recalculate the extension. The total of extensions, corrected where necessary, including sales taxes where applicable and such additives and/or alternates as selected by the Contracting Agency, will be used by the Contracting Agency for award purposes and to fix the Awarded Contract Price amount and the amount of the contract bond.

1-03.3 Execution of Contract
(October 1, 2005 APWA GSP)

Revise this section to read:

INFORMATIONAL COPY ONLY - NOT FOR BIDDING

Copies of the Contract Provisions, including the unsigned Form of Contract, will be available for signature by the successful bidder on the first business day following award. The number of copies to be executed by the Contractor will be determined by the Contracting Agency.

Within **10 (ten) calendar days** after the award date, the successful bidder shall return the signed Contracting Agency-prepared contract, an insurance certification as required by Section 1-07.18, and a satisfactory bond as required by law and Section 1-03.4. Before execution of the contract by the Contracting Agency, the successful bidder shall provide any pre-award information the Contracting Agency may require under Section 1-02.15.

Until the Contracting Agency executes a contract, no proposal shall bind the Contracting Agency nor shall any work begin within the project limits or within Contracting Agency-furnished sites. The Contractor shall bear all risks for any work begun outside such areas and for any materials ordered before the contract is executed by the Contracting Agency.

If the bidder experiences circumstances beyond their control that prevents return of the contract documents within the calendar days after the award date stated above, the Contracting Agency may grant up to a maximum of 5 (five) additional calendar days for return of the documents, provided the Contracting Agency deems the circumstances warrant it.

1-03.4 Contract Bond

(July 23, 2015 APWA GSP)

Delete the first paragraph and replace it with the following:

The successful bidder shall provide executed payment and performance bond(s) for the full contract amount. The bond may be a combined payment and performance bond; or be separate payment and performance bonds. In the case of separate payment and performance bonds, each shall be for the full contract amount. The bond(s) shall:

1. Be on Contracting Agency-furnished form(s);
2. Be signed by an approved surety (or sureties) that:
   a. Is registered with the Washington State Insurance Commissioner, and
   b. Appears on the current Authorized Insurance List in the State of Washington published by the Office of the Insurance Commissioner,
3. Guarantee that the Contractor will perform and comply with all obligations, duties, and conditions under the Contract, including but not limited to the duty and obligation to indemnify, defend, and protect the Contracting Agency against all losses and claims related directly or indirectly from any failure:
   a. Of the Contractor (or any of the employees, subcontractors, or lower tier subcontractors of the Contractor) to faithfully perform and comply with all contract obligations, conditions, and duties, or
   b. Of the Contractor (or the subcontractors or lower tier subcontractors of the Contractor) to pay all laborers, mechanics, subcontractors, lower tier subcontractors, material person, or any other person who provides supplies or provisions for carrying out the work;
4. Be conditioned upon the payment of taxes, increases, and penalties incurred on the project under titles 50, 51, and 82 RCW; and
5. Be accompanied by a power of attorney for the Surety's officer empowered to sign the bond; and
6. Be signed by an officer of the Contractor empowered to sign official statements (sole proprietor or partner). If the Contractor is a corporation, the bond(s) must be signed

INFORMATIONAL COPY ONLY - NOT FOR BIDDING

by the president or vice president, unless accompanied by written proof of the authority of the individual signing the bond(s) to bind the corporation (i.e., corporate resolution, power of attorney, or a letter to such effect signed by the president or vice president).

1-03.7 Judicial Review
(November 30, 2018 APWA GSP)

Revise this section to read:

Any decision made by the Contracting Agency regarding the Award and execution of the Contract or Bid rejection shall be conclusive subject to the scope of judicial review permitted under Washington Law. Such review, if any, shall be timely filed in the Superior Court of the county where the Contracting Agency headquarters is located, provided that where an action is asserted against a county, RCW 36.01.050 shall control venue and jurisdiction.

1-04 Scope Of The Work

1-04.2 Coordination of Contract Documents, Plans, Special Provisions, Specifications, and Addenda
(March 13, 2012 APWA GSP)

Revise the second paragraph to read:

Any inconsistency in the parts of the contract shall be resolved by following this order of precedence (e.g., 1 presiding over 2, 2 over 3, 3 over 4, and so forth):

1. Addenda,
2. Proposal Form,
3. Special Provisions,
4. Contract Plans,
5. Amendments to the Standard Specifications,
6. Standard Specifications,
7. Contracting Agency's Standard Plans or Details (if any), and
8. WSDOT Standard Plans for Road, Bridge, and Municipal Construction.

1-05 Control Of Work

1-05.7 Removal of Defective and Unauthorized Work
(October 1, 2005 APWA GSP)

Supplement this section with the following:

If the Contractor fails to remedy defective or unauthorized work within the time specified in a written notice from the Engineer, or fails to perform any part of the work required by the Contract Documents, the Engineer may correct and remedy such work as may be identified in the written notice, with Contracting Agency forces or by such other means as the Contracting Agency may deem necessary.

INFORMATIONAL COPY ONLY - NOT FOR BIDDING

If the Contractor fails to comply with a written order to remedy what the Engineer determines to be an emergency situation, the Engineer may have the defective and unauthorized work corrected immediately, have the rejected work removed and replaced, or have work the Contractor refuses to perform completed by using Contracting Agency or other forces. An emergency situation is any situation when, in the opinion of the Engineer, a delay in its remedy could be potentially unsafe, or might cause serious risk of loss or damage to the public.

Direct or indirect costs incurred by the Contracting Agency attributable to correcting and remedying defective or unauthorized work, or work the Contractor failed or refused to perform, shall be paid by the Contractor. Payment will be deducted by the Engineer from monies due, or to become due, the Contractor. Such direct and indirect costs shall include in particular, but without limitation, compensation for additional professional services required, and costs for repair and replacement of work of others destroyed or damaged by correction, removal, or replacement of the Contractor's unauthorized work.

No adjustment in contract time or compensation will be allowed because of the delay in the performance of the work attributable to the exercise of the Contracting Agency's rights provided by this Section.

The rights exercised under the provisions of this section shall not diminish the Contracting Agency's right to pursue any other avenue for additional remedy or damages with respect to the Contractor's failure to perform the work as required.

1-05.11 Final Inspection

Delete this section and replace it with the following:

1-05.11Final Inspections and Operational Testing
(October 1, 2005 APWA GSP)

1-05.11(1) Substantial Completion Date

When the Contractor considers the work to be substantially complete, the Contractor shall so notify the Engineer and request the Engineer establish the Substantial Completion Date. The Contractor's request shall list the specific items of work that remain to be completed in order to reach physical completion. The Engineer will schedule an inspection of the work with the Contractor to determine the status of completion. The Engineer may also establish the Substantial Completion Date unilaterally.

If, after this inspection, the Engineer concurs with the Contractor that the work is substantially complete and ready for its intended use, the Engineer, by written notice to the Contractor, will set the Substantial Completion Date. If, after this inspection the Engineer does not consider the work substantially complete and ready for its intended use, the Engineer will, by written notice, so notify the Contractor giving the reasons therefor.

Upon receipt of written notice concurring in or denying substantial completion, whichever is applicable, the Contractor shall pursue vigorously, diligently and without unauthorized interruption, the work necessary to reach Substantial and Physical Completion. The Contractor shall provide the Engineer with a revised schedule indicating when the Contractor expects to reach substantial and physical completion of the work.

INFORMATIONAL COPY ONLY - NOT FOR BIDDING

The above process shall be repeated until the Engineer establishes the Substantial Completion Date and the Contractor considers the work physically complete and ready for final inspection.

1-05.11(2) Final Inspection and Physical Completion Date

When the Contractor considers the work physically complete and ready for final inspection, the Contractor by written notice, shall request the Engineer to schedule a final inspection. The Engineer will set a date for final inspection. The Engineer and the Contractor will then make a final inspection and the Engineer will notify the Contractor in writing of all particulars in which the final inspection reveals the work incomplete or unacceptable. The Contractor shall immediately take such corrective measures as are necessary to remedy the listed deficiencies. Corrective work shall be pursued vigorously, diligently, and without interruption until physical completion of the listed deficiencies. This process will continue until the Engineer is satisfied the listed deficiencies have been corrected.

If action to correct the listed deficiencies is not initiated within 7 days after receipt of the written notice listing the deficiencies, the Engineer may, upon written notice to the Contractor, take whatever steps are necessary to correct those deficiencies pursuant to Section 1-05.7.
The Contractor will not be allowed an extension of contract time because of a delay in the performance of the work attributable to the exercise of the Engineer's right hereunder.

Upon correction of all deficiencies, the Engineer will notify the Contractor and the Contracting Agency, in writing, of the date upon which the work was considered physically complete. That date shall constitute the Physical Completion Date of the contract, but shall not imply acceptance of the work or that all the obligations of the Contractor under the contract have been fulfilled.

1-05.11(3) Operational Testing

It is the intent of the Contracting Agency to have at the Physical Completion Date a complete and operable system. Therefore when the work involves the installation of machinery or other mechanical equipment; street lighting, electrical distribution or signal systems; irrigation systems; buildings; or other similar work it may be desirable for the Engineer to have the Contractor operate and test the work for a period of time after final inspection but prior to the physical completion date. Whenever items of work are listed in the Contract Provisions for operational testing they shall be fully tested under operating conditions for the time period specified to ensure their acceptability prior to the Physical Completion Date. During and following the test period, the Contractor shall correct any items of workmanship, materials, or equipment which prove faulty, or that are not in first class operating condition. Equipment, electrical controls, meters, or other devices and equipment to be tested during this period shall be tested under the observation of the Engineer, so that the Engineer may determine their suitability for the purpose for which they were installed. The Physical Completion Date cannot be established until testing and corrections have been completed to the satisfaction of the Engineer.

The costs for power, gas, labor, material, supplies, and everything else needed to successfully complete operational testing, shall be included in the unit contract prices related to the system being tested, unless specifically set forth otherwise in the proposal.

Operational and test periods, when required by the Engineer, shall not affect a manufacturer's guaranties or warranties furnished under the terms of the contract.

INFORMATIONAL COPY ONLY - NOT FOR BIDDING

1-05.13 Superintendents, Labor and Equipment of Contractor

(August 14, 2013 APWA GSP)

Delete the sixth and seventh paragraphs of this section.

1-05.15 Method of Serving Notices

(March 25, 2009 APWA GSP)

Revise the second paragraph to read:

All correspondence from the Contractor shall be directed to the Project Engineer. All correspondence from the Contractor constituting any notification, notice of protest, notice of dispute, or other correspondence constituting notification required to be furnished under the Contract, must be in paper format, hand delivered or sent via mail delivery service to the Project Engineer's office. Electronic copies such as e-mails or electronically delivered copies of correspondence will not constitute such notice and will not comply with the requirements of the Contract.

1-05.16 Water and Power

(October 1, 2005 APWA GSP)

The Contractor shall make necessary arrangements, and shall bear the costs for power and water necessary for the performance of the work, unless the contract includes power and water as a pay item.

1-06 Control Of Material

Section 1-06 is supplemented with the following:

Buy America

(August 6, 2012)
In accordance with Buy America requirements contained in 23 CFR 635.410, the major quantities of steel and iron construction material that is permanently incorporated into the project shall consist of American-made materials only. Buy America does not apply to temporary steel items, e.g., temporary sheet piling, temporary bridges, steel scaffolding and falsework.

Minor amounts of foreign steel and iron may be utilized in this project provided the cost of the foreign material used does not exceed one-tenth of one percent of the total contract cost or $2,500.00, whichever is greater.

American-made material is defined as material having all manufacturing processes occurring domestically. To further define the coverage, a domestic product is a manufactured steel material that was produced in one of the 50 States, the District of Columbia, Puerto Rico, or in the territories and possessions of the United States.

If domestically produced steel billets or iron ingots are exported outside of the area of coverage, as defined above, for any manufacturing process then the resulting product

INFORMATIONAL COPY ONLY - NOT FOR BIDDING

does not conform to the Buy America requirements. Additionally, products manufactured domestically from foreign source steel billets or iron ingots do not conform to the Buy America requirements because the initial melting and mixing of alloys to create the material occurred in a foreign country.

Manufacturing begins with the initial melting and mixing, and continues through the coating stage. Any process which modifies the chemical content, the physical size or shape, or the final finish is considered a manufacturing process. The processes include rolling, extruding, machining, bending, grinding, drilling, welding, and coating. The action of applying a coating to steel or iron is deemed a manufacturing process. Coating includes epoxy coating, galvanizing, aluminizing, painting, and any other coating that protects or enhances the value of steel or iron. Any process from the original reduction from ore to the finished product constitutes a manufacturing process for iron.

Due to a nationwide waiver, Buy America does not apply to raw materials (iron ore and alloys), scrap (recycled steel or iron), and pig iron or processed, pelletized, and reduced iron ore.

The following are considered to be steel manufacturing processes:

1. Production of steel by any of the following processes:

    a. Open hearth furnace.

    b. Basic oxygen.

    c. Electric furnace.

    d. Direct reduction.

2. Rolling, heat treating, and any other similar processing.

3. Fabrication of the products.

    a. Spinning wire into cable or strand.

    b. Corrugating and rolling into culverts.

    c. Shop fabrication.

A certification of materials origin will be required for any items comprised of, or containing steel or iron construction materials prior to such items being incorporated into the permanent work. The certification shall be on DOT Form 350-109EF provided by the Engineer, or such other form the Contractor chooses, provided it contains the same information as DOT Form 350-109EF.

1-06.6 Recycled Materials
(January 4, 2016 APWA GSP)

Delete this section, including its subsections, and replace it with the following:

INFORMATIONAL COPY ONLY - NOT FOR BIDDING

The Contractor shall make their best effort to utilize recycled materials in the construction of the project. Approval of such material use shall be as detailed elsewhere in the Standard Specifications.

Prior to Physical Completion the Contractor shall report the quantity of recycled materials that were utilized in the construction of the project for each of the items listed in Section 9-03.21. The report shall include hot mix asphalt, recycled concrete aggregate, recycled glass, steel furnace slag and other recycled materials (e.g. utilization of on-site material and aggregates from concrete returned to the supplier). The Contractor's report shall be provided on DOT form 350-075 Recycled Materials Reporting.

1-07 Legal Relations And Responsibilities To The Public

1-07.1 Laws to be Observed
(October 1, 2005 APWA GSP)

Supplement this section with the following:

In cases of conflict between different safety regulations, the more stringent regulation shall apply.

The Washington State Department of Labor and Industries shall be the sole and paramount administrative agency responsible for the administration of the provisions of the Washington Industrial Safety and Health Act of 1973 (WISHA).

The Contractor shall maintain at the project site office, or other well known place at the project site, all articles necessary for providing first aid to the injured. The Contractor shall establish, publish, and make known to all employees, procedures for ensuring immediate removal to a hospital, or doctor's care, persons, including employees, who may have been injured on the project site. Employees should not be permitted to work on the project site before the Contractor has established and made known procedures for removal of injured persons to a hospital or a doctor's care.

The Contractor shall have sole responsibility for the safety, efficiency, and adequacy of the Contractor's plant, appliances, and methods, and for any damage or injury resulting from their failure, or improper maintenance, use, or operation. The Contractor shall be solely and completely responsible for the conditions of the project site, including safety for all persons and property in the performance of the work. This requirement shall apply continuously, and not be limited to normal working hours. The required or implied duty of the Engineer to conduct construction review of the Contractor's performance does not, and shall not, be intended to include review and adequacy of the Contractor's safety measures in, on, or near the project site.

1-07.2 State Taxes

Delete this section, including its sub-sections, in its entirety and replace it with the following:

1-07.2 State Sales Tax
(June 27, 2011 APWA GSP)

The Washington State Department of Revenue has issued special rules on the State sales tax. Sections 1-07.2(1) through 1-07.2(3) are meant to clarify those rules. The Contractor

INFORMATIONAL COPY ONLY - NOT FOR BIDDING

should contact the Washington State Department of Revenue for answers to questions in this area. The Contracting Agency will not adjust its payment if the Contractor bases a bid on a misunderstood tax liability.

The Contractor shall include all Contractor-paid taxes in the unit bid prices or other contract amounts. In some cases, however, state retail sales tax will not be included. Section 1-07.2(2) describes this exception.

The Contracting Agency will pay the retained percentage (or release the Contract Bond if a FHWA-funded Project) only if the Contractor has obtained from the Washington State Department of Revenue a certificate showing that all contract-related taxes have been paid (RCW 60.28.051). The Contracting Agency may deduct from its payments to the Contractor any amount the Contractor may owe the Washington State Department of Revenue, whether the amount owed relates to this contract or not. Any amount so deducted will be paid into the proper State fund.

1-07.2(1) State Sales Tax — Rule 171

WAC 458-20-171, and its related rules, apply to building, repairing, or improving streets, roads, etc., which are owned by a municipal corporation, or political subdivision of the state, or by the United States, and which are used primarily for foot or vehicular traffic. This includes storm or combined sewer systems within and included as a part of the street or road drainage system and power lines when such are part of the roadway lighting system. For work performed in such cases, the Contractor shall include Washington State Retail Sales Taxes in the various unit bid item prices, or other contract amounts, including those that the Contractor pays on the purchase of the materials, equipment, or supplies used or consumed in doing the work.

1-07.2(2) State Sales Tax — Rule 170

WAC 458-20-170, and its related rules, apply to the constructing and repairing of new or existing buildings, or other structures, upon real property. This includes, but is not limited to, the construction of streets, roads, highways, etc., owned by the state of Washington; water mains and their appurtenances; sanitary sewers and sewage disposal systems unless such sewers and disposal systems are within, and a part of, a street or road drainage system; telephone, telegraph, electrical power distribution lines, or other conduits or lines in or above streets or roads, unless such power lines become a part of a street or road lighting system; and installing or attaching of any article of tangible personal property in or to real property, whether or not such personal property becomes a part of the realty by virtue of installation.

For work performed in such cases, the Contractor shall collect from the Contracting Agency, retail sales tax on the full contract price. The Contracting Agency will automatically add this sales tax to each payment to the Contractor. For this reason, the Contractor shall not include the retail sales tax in the unit bid item prices, or in any other contract amount subject to Rule 170, with the following exception.

Exception: The Contracting Agency will not add in sales tax for a payment the Contractor or a subcontractor makes on the purchase or rental of tools, machinery, equipment, or consumable supplies not integrated into the project. Such sales taxes shall be included in the unit bid item prices or in any other contract amount.

INFORMATIONAL COPY ONLY - NOT FOR BIDDING

1-07.2(3) Services

The Contractor shall not collect retail sales tax from the Contracting Agency on any contract wholly for professional or other services (as defined in Washington State Department of Revenue Rules 138 and 244).

Wages

1-07.9(1) General

Section 1-07.9(1) is supplemented with the following:

(January 9, 2019)
The Federal wage rates incorporated in this contract have been established by the Secretary of Labor under United States Department of Labor General Decision No. WA190001.

The State rates incorporated in this contract are applicable to all construction activities associated with this contract.

Requirements for Nondiscrimination

Section 1-07.11 is supplemented with the following:

(April 2, 2018)
Requirement for Affirmative Action to Ensure Equal Employment Opportunity (Executive Order 11246)

1. The Contractor's attention is called to the Equal Opportunity Clause and the Standard Federal Equal Employment Opportunity Construction Contract Specifications set forth herein.

2. The goals and timetables for minority and female participation set by the Office of Federal Contract Compliance Programs, expressed in percentage terms for the Contractor's aggregate work force in each construction craft and in each trade on all construction work in the covered area, are as follows:

Women - Statewide

Timetable	Goal
Until further notice	6.9%

Minorities - by Standard Metropolitan Statistical Area (SMSA)

Spokane, WA:
SMSA Counties:
Spokane, WA — 2.8
WA Spokane.
Non-SMSA Counties — 3.0
WA Adams; WA Asotin; WA Columbia; WA Ferry; WA Garfield; WA Lincoln, WA Pend Oreille; WA Stevens; WA Whitman.

INFORMATIONAL COPY ONLY - NOT FOR BIDDING

Richland, WA
SMSA Counties:
Richland Kennewick, WA 5.4
WA Benton; WA Franklin.
Non-SMSA Counties 3.6
WA Walla Walla.

Yakima, WA:
SMSA Counties:
Yakima, WA 9.7
WA Yakima.
Non-SMSA Counties 7.2
WA Chelan; WA Douglas; WA Grant; WA Kittitas; WA Okanogan.

Seattle, WA:
SMSA Counties:
Seattle Everett, WA 7.2
WA King; WA Snohomish.
Tacoma, WA 6.2
WA Pierce.
Non-SMSA Counties 6.1
WA Clallam; WA Grays Harbor; WA Island; WA Jefferson; WA Kitsap; WA Lewis; WA Mason; WA Pacific; WA San Juan; WA Skagit; WA Thurston; WA Whatcom.

Portland, OR:
SMSA Counties:
Portland, OR-WA 4.5
WA Clark.
Non-SMSA Counties 3.8
WA Cowlitz; WA Klickitat; WA Skamania; WA Wahkiakum.

These goals are applicable to each nonexempt Contractor's total on-site construction workforce, regardless of whether or not part of that workforce is performing work on a Federal, or federally assisted project, contract, or subcontract until further notice. Compliance with these goals and time tables is enforced by the Office of Federal Contract compliance Programs.

The Contractor's compliance with the Executive Order and the regulations in 41 CFR Part 60-4 shall be based on its implementation of the Equal Opportunity Clause, specific affirmative action obligations required by the specifications set forth in 41 CFR 60-4.3(a), and its efforts to meet the goals. The hours of minority and female employment and training must be substantially uniform throughout the length of the contract, in each construction craft and in each trade, and the Contractor shall make a good faith effort to employ minorities and women evenly on each of its projects. The transfer of minority or female employees or trainees from Contractor to Contractor or from project to project for the sole purpose of meeting the Contractor's goal shall be a violation of the contract, the Executive Order and the regulations in 41 CFR Part 60-4. Compliance with the goals will be measured against the total work hours performed.

3. The Contractor shall provide written notification to the Office of Federal Contract Compliance Programs (OFCCP) within 10 working days of award of any construction subcontract in excess of $10,000 or more that are Federally funded, at any tier for construction work under the contract resulting from this solicitation. The notification

INFORMATIONAL COPY ONLY - NOT FOR BIDDING

shall list the name, address and telephone number of the Subcontractor; employer identification number of the Subcontractor; estimated dollar amount of the subcontract; estimated starting and completion dates of the subcontract; and the geographical area in which the contract is to be performed. The notification shall be sent to:

U.S. Department of Labor
Office of Federal Contract Compliance Programs Pacific Region
Attn: Regional Director
San Francisco Federal Building
90 – 7th Street, Suite 18-300
San Francisco, CA 94103(415) 625-7800 Phone
(415) 625-7799 Fax

Additional information may be found at the U.S. Department of Labor website: https://www.dol.gov/ofccp/regs/compliance/preaward/cnstnote.htm

4. As used in this Notice, and in the contract resulting from this solicitation, the Covered Area is as designated herein.

Standard Federal Equal Employment Opportunity Construction Contract Specifications (Executive Order 11246)

1. As used in these specifications:

   a. Covered Area means the geographical area described in the solicitation from which this contract resulted;

   b. Director means Director, Office of Federal Contract Compliance Programs, United States Department of Labor, or any person to whom the Director delegates authority;

   c. Employer Identification Number means the Federal Social Security number used on the Employer's Quarterly Federal Tax Return, U. S. Treasury Department Form 941;

   d. Minority includes:

      (1) Black, a person having origins in any of the Black Racial Groups of Africa.

      (2) Hispanic, a fluent Spanish speaking, Spanish surnamed person of Mexican, Puerto Rican, Cuban, Central American, South American, or other Spanish origin.

      (3) Asian or Pacific Islander, a person having origins in any of the original peoples of the Pacific rim or the Pacific Islands, the Hawaiian Islands and Samoa.

      (4) American Indian or Alaskan Native, a person having origins in any of the original peoples of North America, and who maintain cultural identification through tribal affiliation or community recognition.

2. Whenever the Contractor, or any Subcontractor at any tier, subcontracts a portion of the work involving any construction trade, it shall physically include in each subcontract

INFORMATIONAL COPY ONLY - NOT FOR BIDDING

in excess of $10,000 the provisions of these specifications and the Notice which contains the applicable goals for minority and female participation and which is set forth in the solicitations from which this contract resulted.

3. If the Contractor is participating (pursuant to 41 CFR 60-4.5) in a Hometown Plan approved by the U.S. Department of Labor in the covered area either individually or through an association, its affirmative action obligations on all work in the Plan area (including goals and timetables) shall be in accordance with that Plan for those trades which have unions participating in the Plan. Contractors must be able to demonstrate their participation in and compliance with the provisions of any such Hometown Plan. Each Contractor or Subcontractor participating in an approved Plan is individually required to comply with its obligations under the EEO clause, and to make a good faith effort to achieve each goal under the Plan in each trade in which it has employees. The overall good faith performance by other Contractors or Subcontractors toward a goal in an approved Plan does not excuse any covered Contractor's or Subcontractor's failure to take good faith effort to achieve the Plan goals and timetables.

4. The Contractor shall implement the specific affirmative action standards provided in paragraphs 7a through 7p of this Special Provision. The goals set forth in the solicitation from which this contract resulted are expressed as percentages of the total hours of employment and training of minority and female utilization the Contractor should reasonably be able to achieve in each construction trade in which it has employees in the covered area. Covered construction contractors performing construction work in geographical areas where they do not have a Federal or federally assisted construction contract shall apply the minority and female goals established for the geographical area where the work is being performed. The Contractor is expected to make substantially uniform progress in meeting its goals in each craft during the period specified.

5. Neither the provisions of any collective bargaining agreement, nor the failure by a union with whom the Contractor has a collective bargaining agreement, to refer either minorities or women shall excuse the Contractor's obligations under these specifications, Executive Order 11246, or the regulations promulgated pursuant thereto.

6. In order for the nonworking training hours of apprentices and trainees to be counted in meeting the goals, such apprentices and trainees must be employed by the Contractor during the training period, and the Contractor must have made a commitment to employ the apprentices and trainees at the completion of their training, subject to the availability of employment opportunities. Trainees must be trained pursuant to training programs approved by the U.S. Department of Labor.

7. The Contractor shall take specific affirmative actions to ensure equal employment opportunity. The evaluation of the Contractor's compliance with these specifications shall be based upon its effort to achieve maximum results from its action. The Contractor shall document these efforts fully, and shall implement affirmative action steps at least as extensive as the following:

   a. Ensure and maintain a working environment free of harassment, intimidation, and coercion at all sites, and in all facilities at which the Contractor's employees are assigned to work. The Contractor, where possible, will assign two or more women to each construction project. The Contractor shall specifically ensure that all foremen, superintendents, and other on-site supervisory personnel are aware of and carry out the Contractor's obligation

INFORMATIONAL COPY ONLY - NOT FOR BIDDING

to maintain such a working environment, with specific attention to minority or female individuals working at such sites or in such facilities.

b. Establish and maintain a current list of minority and female recruitment sources, provide written notification to minority and female recruitment sources and to community organizations when the Contractor or its unions have employment opportunities available, and maintain a record of the organizations' responses.

c. Maintain a current file of the names, addresses and telephone numbers of each minority and female off-the-street applicant and minority or female referral from a union, a recruitment source or community organization and of what action was taken with respect to each such individual. If such individual was sent to the union hiring hall for referral and was not referred back to the Contractor by the union or, if referred, not employed by the Contractor, this shall be documented in the file with the reason therefor, along with whatever additional actions the Contractor may have taken.

d. Provide immediate written notification to the Director when the union or unions with which the Contractor has a collective bargaining agreement has not referred to the Contractor a minority person or woman sent by the Contractor, or when the Contractor has other information that the union referral process has impeded the Contractor's efforts to meet its obligations.

e. Develop on-the-job training opportunity and/or participate in training programs for the area which expressly include minorities and women, including upgrading programs and apprenticeship and trainee programs relevant to the Contractor's employment needs, especially those programs funded or approved by the U.S. Department of Labor. The Contractor shall provide notice of these programs to the sources compiled under 7b above.

f. Disseminate the Contractor's EEO policy by providing notice of the policy to unions and training programs and requesting their cooperation in assisting the Contractor in meeting its EEO obligations; by including it in any policy manual and collective bargaining agreement; by publicizing it in the company newspaper, annual report, etc.; by specific review of the policy with all management personnel and with all minority and female employees at least once a year; and by posting the company EEO policy on bulletin boards accessible to all employees at each location where construction work is performed.

g. Review, at least annually, the company's EEO policy and affirmative action obligations under these specifications with all employees having any responsibility for hiring, assignment, layoff, termination or other employment decisions including specific review of these items with on-site supervisory personnel such as Superintendents, General Foremen, etc., prior to the initiation of construction work at any job site. A written record shall be made and maintained identifying the time and place of these meetings, persons attending, subject matter discussed, and disposition of the subject matter.

h. Disseminate the Contractor's EEO policy externally by including it in any advertising in the news media, specifically including minority and female news media, and providing written notification to and discussing the Contractor's

INFORMATIONAL COPY ONLY - NOT FOR BIDDING

EEO policy with other Contractors and Subcontractors with whom the Contractor does or anticipates doing business.

i. Direct its recruitment efforts, both oral and written to minority, female and community organizations, to schools with minority and female students and to minority and female recruitment and training organizations serving the Contractor's recruitment area and employment needs. Not later than one month prior to the date for the acceptance of applications for apprenticeship or other training by any recruitment source, the Contractor shall send written notification to organizations such as the above, describing the openings, screening procedures, and tests to be used in the selection process.

j. Encourage present minority and female employees to recruit other minority persons and women and where reasonable, provide after school, summer and vacation employment to minority and female youth both on the site and in other areas of a Contractor's work force.

k. Validate all tests and other selection requirements where there is an obligation to do so under 41 CFR Part 60-3.

l. Conduct, at least annually, an inventory and evaluation of all minority and female personnel for promotional opportunities and encourage these employees to seek or to prepare for, through appropriate training, etc., such opportunities.

m. Ensure that seniority practices, job classifications, work assignments and other personnel practices, do not have a discriminatory effect by continually monitoring all personnel and employment related activities to ensure that the EEO policy and the Contractor's obligations under these specifications are being carried out.

n. Ensure that all facilities and company activities are nonsegregated except that separate or single-user toilet and necessary changing facilities shall be provided to assure privacy between the sexes.

o. Document and maintain a record of all solicitations of offers for subcontracts from minority and female construction contractors and suppliers, including circulation of solicitations to minority and female contractor associations and other business associations.

p. Conduct a review, at least annually, of all supervisors' adherence to and performance under the Contractor's EEO policies and affirmative action obligations.

8. Contractors are encouraged to participate in voluntary associations which assist in fulfilling one or more of their affirmative action obligations (7a through 7p). The efforts of a contractor association, joint contractor-union, contractor-community, or other similar group of which the Contractor is a member and participant, may be asserted as fulfilling any one or more of the obligations under 7a through 7p of this Special Provision provided that the Contractor actively participates in the group, makes every effort to assure that the group has a positive impact on the employment of minorities and women in the industry, ensure that the concrete benefits of the program are reflected in the Contractor's minority and female work-force participation, makes a good faith effort to meet its individual goals and timetables, and can provide access to

INFORMATIONAL COPY ONLY - NOT FOR BIDDING

documentation which demonstrate the effectiveness of actions taken on behalf of the Contractor. The obligation to comply, however, is the Contractor's and failure of such a group to fulfill an obligation shall not be a defense for the Contractor's noncompliance.

9. A single goal for minorities and a separate single goal for women have been established. The Contractor, however, is required to provide equal employment opportunity and to take affirmative action for all minority groups, both male and female, and all women, both minority and non-minority. Consequently, the Contractor may be in violation of the Executive Order if a particular group is employed in substantially disparate manner (for example, even though the Contractor has achieved its goals for women generally, the Contractor may be in violation of the Executive Order if a specific minority group of women is underutilized).

10. The Contractor shall not use the goals and timetables or affirmative action standards to discriminate against any person because of race, color, religion, sex, or national origin.

11. The Contractor shall not enter into any subcontract with any person or firm debarred from Government contracts pursuant to Executive Order 11246.

12. The Contractor shall carry out such sanctions and penalties for violation of these specifications and of the Equal Opportunity Clause, including suspensions, terminations and cancellations of existing subcontracts as may be imposed or ordered pursuant to Executive Order 11246, as amended, and its implementing regulations by the Office of Federal Contract Compliance Programs. Any Contractor who fails to carry out such sanctions and penalties shall be in violation of these specifications and Executive Order 11246, as amended.

13. The Contractor, in fulfilling its obligations under these specifications, shall implement specific affirmative action steps, at least as extensive as those standards prescribed in paragraph 7 of this Special Provision, so as to achieve maximum results from its efforts to ensure equal employment opportunity. If the Contractor fails to comply with the requirements of the Executive Order, the implementing regulations, or these specifications, the Director shall proceed in accordance with 41 CFR 60-4.8.

14. The Contractor shall designate a responsible official to monitor all employment related activity to ensure that the company EEO policy is being carried out, to submit reports relating to the provisions hereof as may be required by the government and to keep records. Records shall at least include, for each employee, their name, address, telephone numbers, construction trade, union affiliation if any, employee identification number when assigned, social security number, race, sex, status (e.g., mechanic, apprentice, trainee, helper, or laborer), dates of changes in status, hours worked per week in the indicated trade, rate of pay, and locations at which the work was performed. Records shall be maintained in an easily understandable and retrievable form; however, to the degree that existing records satisfy this requirement, the Contractors will not be required to maintain separate records.

15. Nothing herein provided shall be construed as a limitation upon the application of other laws which establish different standards of compliance or upon the application of requirements for the hiring of local or other area residents (e.g., those under the Public Works Employment Act of 1977 and the Community Development Block Grant Program).

INFORMATIONAL COPY ONLY - NOT FOR BIDDING

16. Additional assistance for Federal Construction Contractors on contracts administered by Washington State Department of Transportation or by Local Agencies may be found at:

Washington State Dept. of Transportation
Office of Equal Opportunity
PO Box 47314
310 Maple Park Ave. SE
Olympia WA
98504-7314
Ph: 360-705-7090
Fax: 360-705-6801
http://www.wsdot.wa.gov/equalopportunity/default.htm

(April 3, 2018)
Disadvantaged Business Enterprise Participation
The Disadvantaged Business Enterprise (DBE) requirements of 49 CFR Part 26 and USDOT's official interpretations (i.e., Questions & Answers) apply to this Contract. Demonstrating compliance with these Specifications is a Condition of Award (COA) of this Contract. Failure to comply with the requirements of this Specification may result in your Bid being found to be nonresponsive resulting in rejection or other sanctions as provided by Contract.

DBE Abbreviations and Definitions

Broker – A business firm that provides a bona fide service, such as professional, technical, consultant or managerial services and assistance in the procurement of essential personnel, facilities, equipment, materials, or supplies required for the performance of the Contract; or, persons/companies who arrange or expedite transactions.

Certified Business Description – Specific descriptions of work the DBE is certified to perform, as identified in the Certified Firm Directory, under the Vendor Information page.

Certified Firm Directory – A database of all Minority, Women, and Disadvantaged Business Enterprises, including those identified as a UDBE, currently certified by Washington State. The on-line Directory is available to Contractors for their use in identifying and soliciting interest from DBE firms. The database is located under the Firm Certification section of the Diversity Management and Compliance System web page at: https://omwbe.diversitycompliance.com.

Commercially Useful Function (CUF) – 49 CFR 26.55(c)(1) defines commercially useful function as: "*A DBE performs a commercially useful function when it is responsible for execution of the work of the contract and is carrying out its responsibilities by actually performing, managing, and supervising the work involved. To perform a commercially useful function, the DBE must also be responsible, with respect to materials and supplies used on the contract, for negotiating price, determining quality and quantity, ordering the material, and installing (where applicable) and paying for the material itself. To determine whether a DBE is performing a commercially useful function, you must evaluate the amount of work subcontracted, industry practices, whether the amount the firm is to be paid under the contract is commensurate with the work it is actually*

INFORMATIONAL COPY ONLY - NOT FOR BIDDING

performing and the DBE credit claimed for its performance of the work, and other relevant factors."

Contract – For this Special Provision only, this definition supplements Section 1-01.3. 49 CFR 26.5 defines contract as: "… a legally binding relationship obligating a seller to furnish supplies or services (including, but not limited to, construction and professional services) and the buyer to pay for them. For purposes of this part, a lease is considered to be a contract."

Disadvantaged Business Enterprise (DBE) – A business firm certified by the Washington State Office of Minority and Women's Business Enterprises, as meeting the criteria outlined in 49 CFR 26 regarding DBE certification. A Underutilized Disadvantaged Business Enterprise (UDBE) firm is a subset of DBE.

Force Account Work – Work measured and paid in accordance with Section 1-09.6.

Good Faith Efforts – Efforts to achieve the UDBE COA Goal or other requirements of this part which, by their scope, intensity, and appropriateness to the objective, can reasonably be expected to fulfill the program requirement.

Manufacturer (DBE) – A DBE firm that operates or maintains a factory or establishment that produces on the premises the materials, supplies, articles, or equipment required under the Contract. A DBE Manufacturer shall produce finished goods or products from raw or unfinished material or purchase and substantially alters goods and materials to make them suitable for construction use before reselling them.

Regular Dealer (DBE) – A DBE firm that owns, operates, or maintains a store, warehouse, or other establishment in which the materials or supplies required for the performance of a Contract are bought, kept in stock, and regularly sold to the public in the usual course of business. To be a Regular Dealer, the DBE firm must be an established regular business that engages in as its principal business and in its own name the purchase and sale of the products in question. A Regular Dealer in such items as steel, cement, gravel, stone, and petroleum products need not own, operate or maintain a place of business if it both owns and operates distribution equipment for the products. Any supplementing of regular dealers' own distribution equipment shall be by long-term formal lease agreements and not on an ad-hoc basis. Brokers, packagers, manufacturers' representatives, or other persons who arrange or expedite transactions shall not be regarded as Regular Dealers within the meaning of this definition.

Underutilized Disadvantaged Business Enterprise (UDBE) – A DBE Firm that is underutilized based on WSDOT's Disparity Study. All UDBEs are DBEs.

UDBE Commitment – The dollar amount the Contractor indicates they will be subcontracting to be applied towards the UDBE Condition of Award Goal as shown on the UDBE Utilization Certification Form for each UDBE Subcontractor. This UDBE Commitment amount will be incorporated into the Contract and shall be considered a Contract requirement. Any changes to the UDBE Commitment require the Engineer's approval.

UDBE Condition of Award (COA) Goal – An assigned numerical amount specified as a percentage of the Contract. Initially, this is the minimum amount

INFORMATIONAL COPY ONLY - NOT FOR BIDDING

that the Bidder must commit to by submission of the Utilization Certification Form and/or by Good Faith Effort (GFE). This is also the minimum required amount of UDBE participation specified as a percentage of the final Contract amount inclusive of all change orders.

UDBE COA Goal

The Contracting Agency has established a UDBE COA Goal for this Contract in the amount of: *** 5 Percent (5%) of the contract total for COA UDBE goals ***

DBE Eligibility/Selection of DBEs

In order to determine the distinct element(s) of work for which a DBE is certified, Contractors should refer to the Certified Business Description. The Contractor shall not use NAICS codes on the UDBE Utilization Certification.

Crediting DBE Participation

Subcontractors proposed as COA must be certified prior to the due date for bids on the Contract. All non-COA DBE Subcontractors shall be certified before the subcontract on which they are participating is executed.

Be advised that although a firm is listed in the Certified Firm Directory, there are cases where the listed firm is in a temporary suspension status. The Contractor shall review the OMWBE Suspended DBE Firms list. A DBE firm that is included on this list may not enter into new contracts that count towards participation.

DBE participation is only credited upon payment to the DBE.

The following are some definitions of what may be counted as DBE participation.

DBE Prime Contractor

Only take credit for that portion of the total dollar value of the Contract equal to the distinct, clearly defined portion of the Work that the DBE Prime Contractor performs with its own forces and is certified to perform.

DBE Subcontractor

Only take credit for that portion of the total dollar value of the subcontract that is equal to the distinct, clearly defined portion of the Work that the DBE performs with its own forces. The value of work performed by the DBE includes the cost of supplies and materials purchased by the DBE and equipment leased by the DBE, for its work on the contract. Supplies, materials or equipment obtained by a DBE that are not utilized or incorporated in the contract work by the DBE will not be eligible for DBE credit.

The supplies, materials, and equipment purchased or leased from the Contractor or its affiliate, including any Contractor's resources available to DBE subcontractors at no cost, shall not be credited.

DBE credit will not be given in instances where the equipment lease includes the operator. The DBE is expected to operate the equipment used in the performance of its work under the contract with its own forces. Situations where equipment is leased and used by the DBE, but payment is deducted from the Contractor's payment to the DBE is not allowed.

INFORMATIONAL COPY ONLY - NOT FOR BIDDING

When the subcontractor is part of a UDBE Commitment, the following apply:

1. If a UDBE subcontracts a portion of the Work of its contract to another firm, the value of the subcontracted Work may be counted toward the UDBE COA Goal only if the Lower-Tier Subcontractor is also a UDBE.

2. Work subcontracted to a Lower-Tier Subcontractor that is a DBE, but not a UDBE, may be counted as DBE race-neutral participation but not counted toward the UDBE COA Goal.

3. Work subcontracted to a non-DBE does not count towards the UDBE COA Goal nor DBE participation.

DBE Subcontract and Lower Tier Subcontract Documents
There must be a subcontract agreement that complies with 49 CFR Part 26 and fully describes the distinct elements of Work committed to be performed by the DBE. The subcontract agreement shall incorporate requirements of the primary Contract. Subcontract agreements of all tiers, including lease agreements shall be readily available at the project site for the Engineer's review.

DBE Service Provider
The value of fees or commissions charged by a DBE Broker, a DBE behaving in a manner of a Broker, or another service provider for providing a bona fide service, such as professional, technical, consultant, managerial services, or for providing bonds or insurance specifically required for the performance of the contract will only be credited as DBE participation, if the fee/commission is determined by the Contracting Agency to be reasonable and the firm has performed a CUF.

Force Account Work
When the Contractor elects to utilize force account Work to meet the UDBE COA Goal, as demonstrated by listing this force account Work on the UDBE Utilization Certification Form, for the purposes of meeting UDBE COA Goal, only 50% of the Proposal amount shall be credited toward the Contractors Commitment to meet the UDBE COA Goal.

One hundred percent of the actual amounts paid to the DBE for the force account Work shall be credited towards UDBE COA Goal or DBE participation.

Temporary Traffic Control
If the DBE firm is being utilized in the capacity of only "Flagging", the DBE firm must provide a Traffic Control Supervisor (TCS) and flagger, which are under the direct control of the DBE. The DBE firm shall also provide all flagging equipment (e.g. paddles, hard hats, and vests).

If the DBE firm is being utilized in the capacity of "Traffic Control Services", the DBE firm must provide a TCS, flaggers, and traffic control items (e.g., cones, barrels, signs, etc.) and be in total control of all items in implementing the traffic control for the project. In addition, if the DBE firm utilizes the Contractor's equipment, such as Transportable Attenuators and Portable Changeable Message Signs (PCMS) no DBE credit can be taken for supplying and operating the items.

INFORMATIONAL COPY ONLY - NOT FOR BIDDING

Trucking

DBE trucking firm participation may only be credited as DBE participation for the value of the hauling services, not for the materials being hauled unless the trucking firm is also certified as a supplier. In situations where the DBE's work is priced per ton, the value of the hauling service must be calculated separately from the value of the materials in order to determine DBE credit for hauling

The DBE trucking firm must own and operate at least one licensed, insured and operational truck on the contract. The truck must be of the type that is necessary to perform the hauling duties required under the contract. The DBE receives credit for the value of the transportation services it provides on the Contract using trucks it owns or leases, licenses, insures, and operates with drivers it employs.

The DBE may lease additional trucks from another DBE firm.

The trucking Work subcontracted to any non-DBE trucking firm will not receive credit for Work done on the project. The DBE may lease trucks from a non-DBE truck leasing company, but can only receive credit towards DBE participation if the DBE uses its own employees as drivers.

DBE credit for a truck broker is limited to the fee/commission that the DBE receives for arranging transportation services.

Truck registration and lease agreements shall be readily available at the project site for the Engineer review.

When Trucking is a UDBE Commitment, the following apply:

1. If the trucking firm is a UDBE, participation may count towards the UDBE COA Goal.

2. The Work that a UDBE trucking firm performs with trucks it leases from other certified UDBE trucking firms qualify for 100% credit towards the UDBE COA Goal.

3. The UDBE may lease trucks from a non-UDBE truck leasing company, but can only receive credit towards UDBE participation if the UDBE uses its own employees as drivers.

DBE Manufacturer and DBE Regular Dealer

One hundred percent (100%) of the cost of the manufactured product obtained from a DBE manufacturer can count as DBE participation. If the DBE manufacturer is a UDBE, participation may count towards the UDBE COA Goal.

Sixty percent (60%) of the cost of materials or supplies purchased from a DBE Regular Dealer may be credited as DBE Participation. If the role of the DBE Regular Dealer is determined to be that of a pass-through, then no DBE credit will be given for its services. If the role of the DBE Regular Dealer is determined to be that of a Broker, then DBE credit shall be limited to the fee or commission it receives for its services. Regular Dealer status and the amount of credit is determined on a Contract-by-Contract basis. If the DBE regular dealer is a UDBE, participation may count towards the UDBE COA Goal.

INFORMATIONAL COPY ONLY - NOT FOR BIDDING

Regular Dealer DBE firms, including UDBEs must be approved before being used on a project. The WSDOT Approved Regular Dealer list published on WSDOT's Office of Equal Opportunity (OEO) web site must include the specific project for which approval is being requested. For purposes of the UDBE COA Goal participation, the Regular Dealer must submit the Regular Dealer Status Request form a minimum of five days prior to bid opening.

Purchase of materials or supplies from a DBE which is neither a manufacturer nor a regular dealer, (i.e. Broker) only the fees or commissions charged for assistance in the procurement of the materials and supplies, or fees or transportation charges for the delivery of materials or supplies required on a job site, can count as DBE participation provided the fees are not excessive as compared with fees customarily allowed for similar services. Documentation will be required to support the fee/commission charged by the DBE. The cost of the materials and supplies themselves cannot be counted toward as DBE participation.

Note: Requests to be listed as a Regular Dealer will only be processed if the requesting firm is a material supplier certified by the Office of Minority and Women's Business Enterprises in a NAICS code that falls within the 42XXXX NAICS Wholesale code section.

Underutilized Disadvantaged Business Enterprise Utilization

The requirements of this section apply to projects with a UDBE COA Goal. To be eligible for award of the Contract, the Bidder shall properly complete and submit an Underutilized Disadvantaged Business Enterprise (UDBE) Utilization Certification with the Bidder's sealed Bid Proposal, as specified in Section 1-02.9 Delivery of Proposal. The Bidder's UDBE Utilization Certification must clearly demonstrate how the Bidder intends to meet the UDBE COA Goal. A UDBE Utilization Certification (WSDOT Form 272-056U) is included in the Proposal package for this purpose as well as instructions on how to properly fill out the form.

The Bidder is advised that the items listed below when listed in the Utilization Certification must have their amounts reduced to the percentages shown and those reduced amounts will be the amount applied towards meeting the UDBE COA Goal.

- Force account at 50%
- Regular dealer at 60%

In the event of arithmetic errors in completing the UDBE Utilization Certification, the amount listed to be applied towards the UDBE COA Goal for each UDBE shall govern and the UDBE total amount shall be adjusted accordingly.

Note: The Contracting Agency shall consider as non-responsive and shall reject any Bid Proposal submitted that does not contain a UDBE Utilization Certification Form that accurately demonstrates how the Bidder intends to meet the UDBE COA Goal.

Underutilized Disadvantaged Business Enterprise Written Confirmation Document(s)

The requirements of this section apply to projects with a UDBE COA Goal. The Bidder shall submit an Underutilized Disadvantaged Business Enterprise (UDBE) Written Confirmation Document (completed and signed by the UDBE) for each UDBE firm listed in the Bidder's completed UDBE Utilization Certification submitted with the Bid.

INFORMATIONAL COPY ONLY - NOT FOR BIDDING

Failure to do so will result in the associated participation being disallowed, which may cause the Bid to be determined to be nonresponsive resulting in Bid rejection.

The Confirmation Documents provide confirmation from the UDBEs that they are participating in the Contract as provided in the Contractor's Commitment. The Confirmation Documents must be consistent with the Utilization Certification.

A UDBE Written Confirmation Document (WSDOT Form 422-031U) is included in the Proposal package for this purpose.

The form(s) shall be received as specified in the special provisions for Section 1-02.9 Delivery of Proposal.

It is prohibited for the Bidder to require a UDBE to submit a Written Confirmation Document with any part of the form left blank. Should the Contracting Agency determine that an incomplete Written Confirmation Document was signed by a UDBE, the validity of the document comes into question. The associated UDBE participation may not receive credit.

Selection of Successful Bidder/Good Faith Efforts (GFE)
The requirements of this section apply to projects with a UDBE COA Goal. The successful Bidder shall be selected on the basis of having submitted the lowest responsive Bid, which demonstrates a good faith effort to achieve the UDBE COA Goal. The Contracting Agency, at any time during the selection process, may request a breakdown of the bid items and amounts that are counted towards the overall contract goal for any of the UDBEs listed on the UDBE Utilization Certification.

Achieving the UDBE COA Goal may be accomplished in one of two ways:

1. <u>By meeting the UDBE COA Goal</u>
   Submission of the UDBE Utilization Certification and supporting UDBE Written Confirmation Document(s) showing the Bidder has obtained enough UDBE participation to meet or exceed the UDBE COA Goal.

2. <u>By documentation that the Bidder made adequate GFE to meet the UDBE COA Goal</u>
   The Bidder may demonstrate a GFE in whole or part through GFE documentation ONLY IN THE EVENT a Bidder's efforts to solicit sufficient UDBE participation have been unsuccessful. The Bidder must supply GFE documentation in addition to the UDBE Utilization Certification, and supporting UDBE Written Confirmation Document(s).

Note: In the case where a Bidder is awarded the contract based on demonstrating adequate GFE, the advertised UDBE COA Goal will not be reduced. The Bidder shall demonstrate a GFE during the life of the Contract to attain the advertised UDBE COA Goal.

GFE documentation shall be submitted as specified in Section 1-02.9.

The Contracting Agency will review the GFE documentation and will determine if the Bidder made an adequate good faith effort.

Good Faith Effort (GFE) Documentation
GFE is evaluated when:

INFORMATIONAL COPY ONLY - NOT FOR BIDDING

1. Determining award of a Contract that has COA goal,

2. When a COA UDBE is terminated and substitution is required, and

3. Prior to Physical Completion when determining whether the Contractor has satisfied its UDBE commitments.

49 CFR Part 26, Appendix A is intended as general guidance and does not, in itself, demonstrate adequate good faith efforts. The following is a list of types of actions, which would be considered as part of the Bidder's GFE to achieve UDBE participation. It is not intended to be a mandatory checklist, nor is it intended to be exclusive or exhaustive. Other factors or types of efforts may be relevant in appropriate cases.

1. Soliciting through all reasonable and available means (e.g. attendance at pre-bid meetings, advertising and/or written notices) the interest of all certified UDBEs who have the capability to perform the Work of the Contract. The Bidder must solicit this interest within sufficient time to allow the UDBEs to respond to the solicitation. The Bidder must determine with certainty if the UDBEs are interested by taking appropriate steps to follow up initial solicitations.

2. Selecting portions of the Work to be performed by UDBEs in order to increase the likelihood that the UDBE COA Goal will be achieved. This includes, where appropriate, breaking out contract Work items into economically feasible units to facilitate UDBE participation, even when the Contractor might otherwise prefer to perform these Work items with its own forces.

3. Providing interested UDBEs with adequate information about the Plans, Specifications, and requirements of the Contract in a timely manner to assist them in responding to a solicitation.

   a. Negotiating in good faith with interested UDBEs. It is the Bidder's responsibility to make a portion of the Work available to UDBE subcontractors and suppliers and to select those portions of the Work or material needs consistent with the available UDBE subcontractors and suppliers, so as to facilitate UDBE participation. Evidence of such negotiation includes the names, addresses, and telephone numbers of UDBEs that were considered; a description of the information provided regarding the Plans and Specifications for the Work selected for subcontracting; and evidence as to why additional agreements could not be reached for UDBEs to perform the Work.

   b. A Bidder using good business judgment would consider a number of factors in negotiating with subcontractors, including DBE subcontractors, and would take a firm's price and capabilities as well as the UDBE COA Goal into consideration. However, the fact that there may be some additional costs involved in finding and using UDBEs is not in itself sufficient reason for a Bidder's failure to meet the UDBE COA Goal, as long as such costs are reasonable. Also, the ability or desire of a Contractor to perform the Work of a Contract with its own organization does not relieve the Bidder of the responsibility to make Good Faith Efforts. Contractors are not, however, required to accept higher quotes from UDBEs if the price difference is excessive or unreasonable.

INFORMATIONAL COPY ONLY - NOT FOR BIDDING

4. Not rejecting UDBEs as being unqualified without sound reasons based on a thorough investigation of their capabilities. The Contractor's standing within its industry, membership in specific groups, organizations, or associations and political or social affiliations (for example union vs. non-union employee status) are not legitimate causes for the rejection or non-solicitation of bids in the Contractor's efforts to meet the UDBE COA Goal.

5. Making efforts to assist interested UDBEs in obtaining bonding, lines of credit, or insurance as required by the recipient or Contractor.

6. Making efforts to assist interested UDBEs in obtaining necessary equipment, supplies, materials, or related assistance or services.

7. Effectively using the services of available minority/women community organizations; minority/women contractors' groups; local, State, and Federal minority/women business assistance offices; and other organizations as allowed on a case-by-case basis to provide assistance in the recruitment and placement of UDBEs.

8. Documentation of GFE must include copies of each UDBE and non-DBE subcontractor quotes submitted to the Bidder when a non-DBE subcontractor is selected over a UDBE for Work on the Contract. (ref. updated DBE regulations – 26.53(b)(2)(vi) & App. A)

Administrative Reconsideration of GFE Documentation

A Bidder has the right to request reconsideration if the GFE documentation submitted with their Bid was determined to be inadequate.

- The Bidder must request within 48 hours of notification of being nonresponsive or forfeit the right to reconsideration.

- The reconsideration decision on the adequacy of the Bidder's GFE documentation shall be made by an official who did not take part in the original determination.

- Only original GFE documentation submitted as a supplement to the Bid shall be considered. The Bidder shall not introduce new documentation at the reconsideration hearing.

- The Bidder shall have the opportunity to meet in person with the official for the purpose of setting forth the Bidder's position as to why the GFE documentation demonstrates a sufficient effort.

- The reconsideration official shall provide the Bidder with a written decision on reconsideration within five working days of the hearing explaining the basis for their finding.

Procedures between Award and Execution

After Award and prior to Execution, the Contractor shall provide the additional information described below. Failure to comply shall result in the forfeiture of the Bidder's Proposal bond or deposit.

INFORMATIONAL COPY ONLY - NOT FOR BIDDING

1. A UDBE Bid Item Breakdown is required which shall contain the following information for all UDBEs as shown on the UDBE Utilization Certification:

   a. Correct business name, federal employee identification number (if available), and mailing address.

   b. List of all Bid items assigned to each UDBE with a clear description of Work to be performed for each Bid item and the dollar value of the Work to be performed by the UDBE.

   c. Description of partial items (if any) to be sublet to each UDBE specifying the Work committed under each item to be performed and including the dollar value of the UDBE portion.

   d. Total amounts shown for each UDBE shall match the amount shown on the UDBE Utilization Certification. A UDBE Bid Item Breakdown that does not conform to the UDBE Utilization Certification or that demonstrates a different amount of UDBE participation than that included in the UDBE Utilization Certification will be returned for correction.

2. A list of all firms who submitted a bid or quote in attempt to participate in this project whether they were successful or not. Include the business name and mailing address.

Note: The firms identified by the Contractor may be contacted by the Contracting Agency to solicit general information as follows: age of the firm and average of its gross annual receipts over the past three-years.

Procedures after Execution

Commercially Useful Function (CUF)

The Contractor may only take credit for the payments made for Work performed by a DBE that is determined to be performing a CUF. Payment must be commensurate with the work actually performed by the DBE. This applies to all DBEs performing Work on a project, whether or not the DBEs are COA, if the Contractor wants to receive credit for their participation. The Engineer will conduct CUF reviews to ascertain whether DBEs are performing a CUF. A DBE performs a CUF when it is carrying out its responsibilities of its contract by actually performing, managing, and supervising the Work involved. The DBE must be responsible for negotiating price; determining quality and quantity; ordering the material, installing (where applicable); and paying for the material itself. If a DBE does not perform "all" of these functions on a furnish-and-install contract, it has not performed a CUF and the cost of materials cannot be counted toward UDBE COA Goal. Leasing of equipment from a leasing company is allowed. However, leasing/purchasing equipment from the Contractor is not allowed. Lease agreements shall be readily available for review by the Engineer.

In order for a DBE traffic control company to be considered to be performing a CUF, the DBE must be in control of its work inclusive of supervision. The DBE shall employ a Traffic Control Supervisor who is directly involved in the management and supervision of the traffic control employees and services.

INFORMATIONAL COPY ONLY - NOT FOR BIDDING

The DBE does not perform a CUF if its role is limited to that of an extra participant in a transaction, contract, or project through which the funds are passed in order to obtain the appearance of DBE participation.

The following are some of the factors that the Engineer will use in determining whether a DBE trucking company is performing a CUF:

- The DBE shall be responsible for the management and supervision of the entire trucking operation for which it is responsible on the contract. The owner demonstrates business related knowledge, shows up on site and is determined to be actively running the business.

- The DBE shall with its own workforce, operate at least one fully licensed, insured, and operational truck used on the Contract. The drivers of the trucks owned and leased by the DBE must be exclusively employed by the DBE and reflected on the DBE's payroll.

- Lease agreements for trucks shall indicate that the DBE has exclusive use of and control over the truck(s). This does not preclude the leased truck from working for others provided it is with the consent of the DBE and the lease provides the DBE absolute priority for use of the leased truck.

- Leased trucks shall display the name and identification number of the DBE.

UDBE Utilization Plan

The UDBE Bid Item Breakdown is the initial plan for Bid Item work committed to UDBE firms. At any time between Execution and Physical Completion, if the Contractor identifies a change in the plan, an update to the Bid Item Breakdown shall be submitted to the Engineer within 7 calendar days of the proposed change for review and acceptance. Plan updates shall not make changes to the Commitment or the UDBE Utilization Certification.

Joint Checking

A joint check is a check between a Subcontractor and the Contractor to the supplier of materials/supplies. The check is issued by the Contractor as payer to the Subcontractor and the material supplier jointly for items to be incorporated into the project. The DBE must release the check to the supplier, while the Contractor acts solely as the guarantor.

A joint check agreement must be approved by the Engineer and requested by the DBE involved using the DBE Joint Check Request Form (form # 272-053) prior to its use. The form must accompany the DBE Joint Check Agreement between the parties involved, including the conditions of the arrangement and expected use of the joint checks.

The approval to use joint checks and the use will be closely monitored by the Engineer. To receive DBE credit for performing a CUF with respect to obtaining materials and supplies, a DBE must "be responsible for negotiating price, determining quality and quantity, ordering the material, installing and paying for the material itself." The Contractor shall submit DBE Joint Check Request Form for the Engineer approval prior to using a joint check.

INFORMATIONAL COPY ONLY - NOT FOR BIDDING

Material costs paid by the Contractor directly to the material supplier are not allowed. If proper procedures are not followed or the Engineer determines that the arrangement results in lack of independence for the DBE involved, no DBE credit will be given for the DBE's participation as it relates to the material cost.

Prompt Payment

Prompt payment to all subcontractors shall be in accordance with Section 1-08.1. Prompt payment requirements apply to progress payments as well as return of retainage.

Reporting

The Contractor and all subcontractors/suppliers/service providers that utilize DBEs to perform work on the project, shall maintain appropriate records that will enable the Engineer to verify DBE participation throughout the life of the project.

Refer to Section 1-08.1 for additional reporting requirements associated with this contract.

Changes in COA Work Committed to UDBE

The Contractor shall utilize the COA UDBEs to perform the work and supply the materials for which each is committed unless approved by the Engineer. The Contractor shall not be entitled to any payment for work or material completed by the Contractor or subcontractors that was committed to be completed by the COA UDBEs.

Owner Initiated Changes

Where the Engineer makes changes that result in changes to Work that was committed to a COA UDBE. The Contractor may be directed to substitute for the Work in such instances.

Contractor Initiated Changes

The Contractor cannot reduce the amount of work committed to a COA UDBE without good cause. Reducing UDBE Commitment is viewed as partial UDBE termination, and therefore subject to the termination procedures below.

Original Quantity Underruns

In the event that Work committed to a UDBE firm as part of the COA underruns the original planned quantities the Contractor may be required to substitute other remaining Work to another UDBE.

Contractor Proposed DBE Substitutions

Requests to substitute a COA UDBE must be for good cause (see UDBE termination process below), and requires prior written approval of the Engineer. After receiving a termination with good cause approval, the Contractor may only replace a UDBE with another certified UDBE. When any changes between Contract Award and Execution result in a substitution of COA UDBE, the substitute UDBE shall be certified prior to the bid opening on the Contract.

UDBE Termination

Termination of a COA UDBE (or an approved substitute UDBE) is only allowed in whole or in part with prior written approval of the Engineer. If the Contractor terminates a COA UDBE without the written approval of the Engineer, the Contractor shall not be entitled to credit towards the UDBE COA Goal for any payment for work or material performed/supplied by the COA UDBE. In addition, sanctions may apply as described elsewhere in this specification.

INFORMATIONAL COPY ONLY - NOT FOR BIDDING

The Contractor must have good cause to terminate a COA UDBE.

Good cause typically includes situations where the UDBE Subcontractor is unable or unwilling to perform the work of its subcontract. Good cause may exist if:

- The UDBE fails or refuses to execute a written contract.
- The UDBE fails or refuses to perform the Work of its subcontract in a way consistent with normal industry standards.
- The UDBE fails or refuses to meet the Contractor's reasonable nondiscriminatory bond requirements.
- The UDBE becomes bankrupt, insolvent, or exhibits credit unworthiness.
- The UDBE is ineligible to work on public works projects because of suspension and debarment proceedings pursuant to federal law or applicable State law.
- The UDBE voluntarily withdraws from the project, and provides written notice of its withdrawal.
- The UDBE's work is deemed unsatisfactory by the Engineer and not in compliance with the Contract.
- The UDBE's owner dies or becomes disabled with the result that the UDBE is unable to complete its Work on the Contract.

Good cause does not exist if:

- The Contractor seeks to terminate a COA UDBE so that the Contractor can self-perform the Work.
- The Contractor seeks to terminate a COA UDBE so the Contractor can substitute another DBE contractor or non-DBE contractor after Contract Award.
- The failure or refusal of the COA UDBE to perform its Work on the subcontract results from the bad faith or discriminatory action of the Contractor (e.g., the failure of the Contractor to make timely payments or the unnecessary placing of obstacles in the path of the UDBE's Work).

Prior to requesting termination, the Contractor shall give notice in writing to the UDBE with a copy to the Engineer of its intent to request to terminate UDBE Work and the reasons for doing so. The UDBE shall have five (5) days to respond to the Contractor's notice. The UDBE's response shall either support the termination or advise the Engineer and the Contractor of the reasons it objects to the termination of its subcontract.

When a COA UDBE is terminated, or fails to complete its work on the Contract for any reason, the Contractor shall substitute with another UDBE or provide documentation of GFE. A plan to achieve the COA UDBE Commitment shall be

INFORMATIONAL COPY ONLY - NOT FOR BIDDING

submitted to the Engineer within 2 days of the approval of termination or the Contract shall be suspended until such time the substitution plan is submitted.

Decertification

When a DBE is "decertified" from the DBE program during the course of the Contract, the participation of that DBE shall continue to count as DBE participation as long as the subcontract with the DBE was executed prior to the decertification notice. The Contractor is obligated to substitute when a DBE does not have an executed subcontract agreement at the time of decertification.

Consequences of Non-Compliance

Breach of Contract

Each contract with a Contractor (and each subcontract the Contractor signs with a Subcontractor) must include the following assurance clause:

The Contractor, subrecipient, or Subcontractor shall not discriminate on the basis of race, color, national origin, or sex in the performance of this contract. The Contractor shall carry out applicable requirements of 49 CFR Part 26 in the award and administration of DOT-assisted contracts. Failure by the Contractor to carry out these requirements is a material breach of this Contract, which may result in the termination of this Contract or such other remedy as the recipient deems appropriate, which may include, but is not limited to:

(1) Withholding monthly progress payments;

(2) Assessing sanctions;

(3) Liquidated damages; and/or

(4) Disqualifying the Contractor from future bidding as non-responsible.

Notice

If the Contractor or any Subcontractor, Consultant, Regular Dealer, or service provider is deemed to be in non-compliance, the Contractor will be informed in writing, by certified mail by the Engineer that sanctions will be imposed for failure to meet the UDBE COA Commitment and/or submit documentation of good faith efforts. The notice will state the specific sanctions to be imposed which may include impacting a Contractor or other entity's ability to participate in future contracts.

Sanctions

If it is determined that the Contractor's failure to meet all or part of the UDBE COA Commitment is due to the Contractor's inadequate good faith efforts throughout the life of the Contract, including failure to submit timely, required Good Faith Efforts information and documentation, the Contractor may be required to pay DBE penalty equal to the amount of the unmet Commitment, in addition to the sanctions outlined in Section 1-07.11(5).

Payment

Compensation for all costs involved with complying with the conditions of this Specification and any other associated DBE requirements is included in payment for the associated Contract items of Work, except otherwise provided in the Specifications.

INFORMATIONAL COPY ONLY - NOT FOR BIDDING

Federal Agency Inspection

Section 1-07.12 is supplemented with the following:

(January 25, 2016)
Required Federal Aid Provisions

The Required Contract Provisions Federal Aid Construction Contracts (FHWA 1273) Revised May 1, 2012 and the amendments thereto supersede any conflicting provisions of the Standard Specifications and are made a part of this Contract; provided, however, that if any of the provisions of FHWA 1273, as amended, are less restrictive than Washington State Law, then the Washington State Law shall prevail.

The provisions of FHWA 1273, as amended, included in this Contract require that the Contractor insert the FHWA 1273 and amendments thereto in each Subcontract, together with the wage rates which are part of the FHWA 1273, as amended. Also, a clause shall be included in each Subcontract requiring the Subcontractors to insert the FHWA 1273 and amendments thereto in any lower tier Subcontracts, together with the wage rates. The Contractor shall also ensure that this section, REQUIRED FEDERAL AID PROVISIONS, is inserted in each Subcontract for Subcontractors and lower tier Subcontractors. For this purpose, upon request to the Project Engineer, the Contractor will be provided with extra copies of the FHWA 1273, the amendments thereto, the applicable wage rates, and this Special Provision.

1-07.13 Contractor's Responsibility for Work

1-07.13(4) Repair of Damage

Section 1-07.13(4) is revised to read:

(August 6, 2001)
The Contractor shall promptly repair all damage to either temporary or permanent work as directed by the Engineer. For damage qualifying for relief under Sections 1-07.13(1), 1-07.13(2), or 1-07.13(3), payment will be made in accordance with Section 1-04.4. Payment will be limited to repair of damaged work only. No payment will be made for delay or disruption of work.

Protection and Restoration of Property

Section 1-07.16 is supplemented with the following:

(******)
Notification

The Contractor shall distribute a special notice to each project resident before beginning work. Project resident means any person, company, or public agency having a driveway inside the project limits, within one mile of the project limits, or having a driveway or access on a dead-end road within the project limits. The special notice shall contain the following information and statements:

INFORMATIONAL COPY ONLY - NOT FOR BIDDING

- Date of the notice.
- Project name, termini, and a description of the major phases of the work.
- Name of Contractor, Contractor's representative and 24 hour phone number. The Contractor shall reply to the project resident within 72 hours of notification
- Scheduled project start and completion dates.
- Available detour routes.
- One-way traffic will be maintained during each working day.
- Two-way traffic will be restored at the end of each working day.
- All plants, trees, shrubs, gardens, sprinklers or structures within the limits of construction will be removed. Residents are to be advised to remove such property before work begins.
- Driveways will be restored to useable conditions at the end of each working day, without exception.
- Mail service interruptions or relocations. Statement that the Contractor will remove, temporarily relocate, and eventually reinstall mail receptacles. Statement that mailboxes, posts, etc., damaged by the Contractor will be replaced and installed at no charge to the resident.
- Possible problems with power, telephone, potable water, sewer, irrigation supply relocations and/or interruptions, if any.
- Temporary fencing requirements for livestock, if any.
- Residents are responsible for driveway culvert maintenance.
- Request to irrigators to eliminate water on the roadway and in the borrow ditches per Grant County Ordinance.

The Contractor must notify all affected Grant County agencies of the date and anticipated length of all road closures, including school districts, fire districts, Multi-Agency Communications Center (509) 762-1901, Sheriff's Dept. (509) 754-2011, Emergency Management (509) 762-1462, and U.S. Postal Service offices.

The Contractor must place a "Notice of Road Construction" in the legal newspaper of Grant County (Columbia Basin Herald). All notices must be provided a minimum of three (3) working days prior to beginning work. The County will not allow any work to be performed until the required notices are made by the Contractor.

(******)

Payment

The lump sum contract price for "Notification" shall be full compensation for all labor, equipment, materials, and tools necessary to perform the work outlined in this supplemental section.

Utilities And Similar Facilities

Section 1-07.17 is supplemented with the following:

(******)

INFORMATIONAL COPY ONLY - NOT FOR BIDDING

Locations and dimensions shown in the Plans for existing facilities are in accordance with available information obtained without uncovering, measuring, or other verification.

Public and private utilities, or their Contractors, will furnish all work necessary to adjust, relocate, replace, or construct their facilities unless otherwise provided for in the Plans or these Special Provisions. Such adjustment, relocation, replacement, or construction will be done during the prosecution of the work for this project.

The Contractor is alerted to the existence of Chapter 19.122 RCW, a law relating to underground utilities and shall adhere to all requirements of this RCW. The telephone number for the One Call center for this project is 1-800-424-5555.

The Contractor can go to the following web site to find any changes to the Washington dig law that took effect in 2013.
http://www.utc.wa.gov/publicSafety/pipelineSafety/Pages/CallBeforeYouDig-DigLaw.aspx

The following addresses and telephone numbers of utility companies and other agencies known or suspected of having facilities within the project limits are supplied for the Contractor's convenience:

- ***Grant County PUD
  30 C Street SW,
  Ephrata, WA 98823, (509) 754-3451***

Public Liability and Property Damage Insurance

Delete this section in its entirety, and replace it with the following:

1-07.18 Insurance
(January 4, 2016 APWA GSP)

1-07.18(1) General Requirements

A. The Contractor shall procure and maintain the insurance described in all subsections of section 1-07.18 of these Special Provisions, from insurers with a current A. M. Best rating of not less than A-: VII and licensed to do business in the State of Washington. The Contracting Agency reserves the right to approve or reject the insurance provided, based on the insurer's financial condition.

B. The Contractor shall keep this insurance in force without interruption from the commencement of the Contractor's Work through the term of the Contract and for thirty (30) days after the Physical Completion date, unless otherwise indicated below.

C. If any insurance policy is written on a claims made form, its retroactive date, and that of all subsequent renewals, shall be no later than the effective date of this Contract. The policy shall state that coverage is claims made, and state the retroactive date. Claims-made form coverage shall be maintained by the Contractor for a minimum of 36 months following the Completion Date or earlier termination of this Contract, and the Contractor shall annually provide the Contracting Agency with proof of renewal. If renewal of the claims made form of

INFORMATIONAL COPY ONLY - NOT FOR BIDDING

coverage becomes unavailable, or economically prohibitive, the Contractor shall purchase an extended reporting period ("tail") or execute another form of guarantee acceptable to the Contracting Agency to assure financial responsibility for liability for services performed.

D. The Contractor's Automobile Liability, Commercial General Liability and Excess or Umbrella Liability insurance policies shall be primary and non-contributory insurance as respects the Contracting Agency's insurance, self-insurance, or self-insured pool coverage. Any insurance, self-insurance, or self-insured pool coverage maintained by the Contracting Agency shall be excess of the Contractor's insurance and shall not contribute with it.

E. The Contractor shall provide the Contracting Agency and all additional insureds with written notice of any policy cancellation, within two business days of their receipt of such notice.

F. The Contractor shall not begin work under the Contract until the required insurance has been obtained and approved by the Contracting Agency

G. Failure on the part of the Contractor to maintain the insurance as required shall constitute a material breach of contract, upon which the Contracting Agency may, after giving five business days' notice to the Contractor to correct the breach, immediately terminate the Contract or, at its discretion, procure or renew such insurance and pay any and all premiums in connection therewith, with any sums so expended to be repaid to the Contracting Agency on demand, or at the sole discretion of the Contracting Agency, offset against funds due the Contractor from the Contracting Agency.

H. All costs for insurance shall be incidental to and included in the unit or lump sum prices of the Contract and no additional payment will be made.

1-07.18(2) Additional Insured

All insurance policies, with the exception of Workers Compensation, and of Professional Liability and Builder's Risk (if required by this Contract) shall name the following listed entities as additional insured(s) using the forms or endorsements required herein:

- the Contracting Agency and its officers, elected officials, employees, agents, and volunteers

The above-listed entities shall be additional insured(s) for the full available limits of liability maintained by the Contractor, irrespective of whether such limits maintained by the Contractor are greater than those required by this Contract, and irrespective of whether the Certificate of Insurance provided by the Contractor pursuant to 1-07.18(4) describes limits lower than those maintained by the Contractor.

For Commercial General Liability insurance coverage, the required additional insured endorsements shall be at least as broad as ISO forms CG 20 10 10 01 for ongoing operations and CG 20 37 10 01 for completed operations.

1-07.18(3) Subcontractors

The Contractor shall cause each Subcontractor of every tier to provide insurance coverage that complies with all applicable requirements of the Contractor-provided insurance as set forth herein, except the Contractor shall have sole responsibility for determining the limits of coverage required to be obtained by Subcontractors.

INFORMATIONAL COPY ONLY - NOT FOR BIDDING

The Contractor shall ensure that all Subcontractors of every tier add all entities listed in 1-07.18(2) as additional insureds, and provide proof of such on the policies as required by that section as detailed in 1-07.18(2) using an endorsement as least as broad as ISO CG 20 10 10 01 for ongoing operations and CG 20 37 10 01 for completed operations.

Upon request by the Contracting Agency, the Contractor shall forward to the Contracting Agency evidence of insurance and copies of the additional insured endorsements of each Subcontractor of every tier as required in 1-07.18(4) Verification of Coverage.

1-07.18(4) Verification of Coverage

The Contractor shall deliver to the Contracting Agency a Certificate(s) of Insurance and endorsements for each policy of insurance meeting the requirements set forth herein when the Contractor delivers the signed Contract for the work. Failure of Contracting Agency to demand such verification of coverage with these insurance requirements or failure of Contracting Agency to identify a deficiency from the insurance documentation provided shall not be construed as a waiver of Contractor's obligation to maintain such insurance.

Verification of coverage shall include:

1. An ACORD certificate or a form determined by the Contracting Agency to be equivalent.
2. Copies of all endorsements naming Contracting Agency and all other entities listed in 1-07.18(2) as additional insured(s), showing the policy number. The Contractor may submit a copy of any blanket additional insured clause from its policies instead of a separate endorsement.
3. Any other amendatory endorsements to show the coverage required herein.
4. A notation of coverage enhancements on the Certificate of Insurance shall <u>not</u> satisfy these requirements – actual endorsements must be submitted.

Upon request by the Contracting Agency, the Contractor shall forward to the Contracting Agency a full and certified copy of the insurance policy(s). If Builders Risk insurance is required on this Project, a full and certified copy of that policy is required when the Contractor delivers the signed Contract for the work.

1-07.18(5) Coverages and Limits

The insurance shall provide the minimum coverages and limits set forth below. Contractor's maintenance of insurance, its scope of coverage, and limits as required herein shall not be construed to limit the liability of the Contractor to the coverage provided by such insurance, or otherwise limit the Contracting Agency's recourse to any remedy available at law or in equity.

All deductibles and self-insured retentions must be disclosed and are subject to approval by the Contracting Agency. The cost of any claim payments falling within the deductible or self-insured retention shall be the responsibility of the Contractor. In the event an additional insured incurs a liability subject to any policy's deductibles or self-insured retention, said deductibles or self-insured retention shall be the responsibility of the Contractor.

1-07.18(5)A Commercial General Liability

Commercial General Liability insurance shall be written on coverage forms at least as broad as ISO occurrence form CG 00 01, including but not limited to liability arising from premises, operations, stop gap liability, independent contractors, products-completed operations, personal

INFORMATIONAL COPY ONLY - NOT FOR BIDDING

and advertising injury, and liability assumed under an insured contract. There shall be no exclusion for liability arising from explosion, collapse or underground property damage.

The Commercial General Liability insurance shall be endorsed to provide a per project general aggregate limit, using ISO form CG 25 03 05 09 or an equivalent endorsement.

Contractor shall maintain Commercial General Liability Insurance arising out of the Contractor's completed operations for at least three years following Substantial Completion of the Work.

Such policy must provide the following minimum limits:

$1,000,000 Each Occurrence
$2,000,000 General Aggregate
$2,000,000 Products & Completed Operations Aggregate
$1,000,000 Personal & Advertising Injury each offence
$1,000,000 Stop Gap / Employers' Liability each accident

1-07.18(5)B Automobile Liability

Automobile Liability shall cover owned, non-owned, hired, and leased vehicles; and shall be written on a coverage form at least as broad as ISO form CA 00 01. If the work involves the transport of pollutants, the automobile liability policy shall include MCS 90 and CA 99 48 endorsements.

Such policy must provide the following minimum limit:

$1,000,000 Combined single limit each accident

1-07.18(5)C Workers' Compensation

The Contractor shall comply with Workers' Compensation coverage as required by the Industrial Insurance laws of the State of Washington.

1-07.23 Public Convenience and Safety

Construction Under Traffic

Section 1-07.23(1) is supplemented with the following:

(January 2, 2012)
Work Zone Clear Zone

The Work Zone Clear Zone (WZCZ) applies during working and nonworking hours. The WZCZ applies only to temporary roadside objects introduced by the Contractor's operations and does not apply to preexisting conditions or permanent Work. Those work operations that are actively in progress shall be in accordance with adopted and approved Traffic Control Plans, and other contract requirements.

During nonworking hours equipment or materials shall not be within the WZCZ unless they are protected by permanent guardrail or temporary concrete barrier.

INFORMATIONAL COPY ONLY - NOT FOR BIDDING

The use of temporary concrete barrier shall be permitted only if the Engineer approves the installation and location.

During actual hours of work, unless protected as described above, only materials absolutely necessary to construction shall be within the WZCZ and only construction vehicles absolutely necessary to construction shall be allowed within the WZCZ or allowed to stop or park on the shoulder of the roadway.

The Contractor's nonessential vehicles and employees private vehicles shall not be permitted to park within the WZCZ at any time unless protected as described above.

Deviation from the above requirements shall not occur unless the Contractor has requested the deviation in writing and the Engineer has provided written approval.

Minimum WZCZ distances are measured from the edge of traveled way and will be determined as follows:

Regulatory Posted Speed	Distance from Traveled Way (Feet)
35 mph or less	10 *
40 mph	15
45 to 55 mph	20
60 mph or greater	30

* or 2-feet beyond the outside edge of sidewalk

Minimum Work Zone Clear Zone Distance

(******)

Payment

No additional compensation will be paid to the Contractor for any cost or expense incurred as a result of the requirements of this provision and all costs shall be considered incidental to and included in other applicable contract items.

1-08 Prosecution And Progress

Add the following new section:

1-08.0 Preliminary Matters

(May 25, 2006 APWA GSP)

Add the following new section:

1-08.0(1) Preconstruction Conference

INFORMATIONAL COPY ONLY - NOT FOR BIDDING

(October 10, 2008 APWA GSP)

Prior to the Contractor beginning the work, a preconstruction conference will be held between the Contractor, the Engineer and such other interested parties as may be invited. The purpose of the preconstruction conference will be:

1. To review the initial progress schedule;
2. To establish a working understanding among the various parties associated or affected by the work;
3. To establish and review procedures for progress payment, notifications, approvals, submittals, etc.;
4. To establish normal working hours for the work;
5. To review safety standards and traffic control; and
6. To discuss such other related items as may be pertinent to the work.

The Contractor shall prepare and submit at the preconstruction conference the following:

1. A breakdown of all lump sum items;
2. A preliminary schedule of working drawing submittals; and
3. A list of material sources for approval if applicable.

Add the following new section:

1-08.0(2) Hours of Work
(December 8, 2014 APWA GSP)

Except in the case of emergency or unless otherwise approved by the Engineer, the normal working hours for the Contract shall be any consecutive 8-hour period between 7:00 a.m. and 6:00 p.m. Monday through Friday, exclusive of a lunch break. If the Contractor desires different than the normal working hours stated above, the request must be submitted in writing prior to the preconstruction conference, subject to the provisions below. The working hours for the Contract shall be established at or prior to the preconstruction conference.

All working hours and days are also subject to local permit and ordinance conditions (such as noise ordinances).

If the Contractor wishes to deviate from the established working hours, the Contractor shall submit a written request to the Engineer for consideration. This request shall state what hours are being requested, and why. Requests shall be submitted for review no later than 3 Working Days prior to the day(s) the Contractor is requesting to change the hours.

If the Contracting Agency approves such a deviation, such approval may be subject to certain other conditions, which will be detailed in writing. For example:

1. On non-Federal aid projects, requiring the Contractor to reimburse the Contracting Agency for the costs in excess of straight-time costs for Contracting Agency representatives who worked during such times. (The Engineer may require designated representatives to be present during the work. Representatives who may be deemed necessary by the Engineer include, but are not limited to: survey crews; personnel from the Contracting Agency's material testing lab; inspectors; and other Contracting Agency employees or third party consultants when, in the opinion of the Engineer, such work necessitates their presence.)

INFORMATIONAL COPY ONLY - NOT FOR BIDDING

2. Considering the work performed on Saturdays, Sundays, and holidays as working days with regard to the contract time.
3. Considering multiple work shifts as multiple working days with respect to contract time even though the multiple shifts occur in a single 24-hour period.
4. If a 4-10 work schedule is requested and approved the non working day for the week will be charged as a working day.
5. If Davis Bacon wage rates apply to this Contract, all requirements must be met and recorded properly on certified payroll

1-08.1 Subcontracting

(November 30, 2018 APWA GSP, Option A)

The eighth paragraph is revised to read:

The Contractor shall certify to the actual amount received from the Contracting Agency and amounts paid to all firms that were used as Subcontractors, lower tier subcontractors, manufacturers, regular dealers, or service providers on the Contract. This includes all Disadvantaged, Minority, Small, Veteran or Women's Business Enterprise firms. This Certification shall be submitted to the Engineer on a monthly basis each month between Execution of the Contract and Physical Completion of the Contract using the application available at: https://wsdot.diversitycompliance.com. A monthly report shall be submitted for every month between Execution of the Contract and Physical Completion regardless of whether payments were made or work occurred.

Section 1-08.1 is supplemented with the following:

(October 12, 1998)
Prior to any subcontractor or agent beginning work, the Contractor shall submit to the Engineer a certification (WSDOT Form 420-004) that a written agreement between the Contractor and the subcontractor or between the subcontractor and any lower tier subcontractor has been executed. This certification shall also guarantee that these subcontract agreements include all the documents required by the Special Provision Federal Agency Inspection.

A subcontractor or lower tier subcontractor will not be permitted to perform any work under the contract until the following documents have been completed and submitted to the Engineer:

1. Request to Sublet Work (Form 421-012), and
2. Contractor and Subcontractor or Lower Tier Subcontractor Certification for Federal-aid Projects (Form 420-004).

The Contractor's records pertaining to the requirements of this Special Provision shall be open to inspection or audit by representatives of the Contracting Agency during the life of the contract and for a period of not less than three years after the date of acceptance of the contract. The Contractor shall retain these records for that period. The Contractor shall also guarantee that these records of all subcontractors and lower tier subcontractors shall be available and open to similar inspection or audit for the same time period.

1-08.4 Prosecution Of Work

INFORMATIONAL COPY ONLY - NOT FOR BIDDING

The first sentence of Section 1-08.4 is revised to read:

(******)
The Contractor shall begin work on April 29, 2019, unless otherwise approved by the Engineer.

1-08.5 Time For Completion

The third paragraph of Section 1-08.5 is revised to read:

(******)
Contract time shall begin on the first working day. The first working day shall be *** April 29, 2019 ***, unless otherwise approved by the Engineer.

Section 1-08.5 is supplemented with the following:

(March 13, 1995)
This project shall be physically completed within *** **60 *** working days.**

1-08.9 Liquidated Damages
(August 14, 2013 APWA GSP)

Revise the fourth paragraph to read:

When the Contract Work has progressed to Substantial Completion as defined in the Contract, the Engineer may determine that the work is Substantially Complete. The Engineer will notify the Contractor in writing of the Substantial Completion Date. For overruns in Contract time occurring after the date so established, the formula for liquidated damages shown above will not apply. For overruns in Contract time occurring after the Substantial Completion Date, liquidated damages shall be assessed on the basis of direct engineering and related costs assignable to the project until the actual Physical Completion Date of all the Contract Work. The Contractor shall complete the remaining Work as promptly as possible. Upon request by the Project Engineer, the Contractor shall furnish a written schedule for completing the physical Work on the Contract.

1-09 Measurement And Payment

1-09.6 Force Account

(October 10, 2008 APWA GSP)
Supplement this section with the following:

The Contracting Agency has estimated and included in the Proposal, dollar amounts for all items to be paid per force account, only to provide a common proposal for Bidders. All such dollar amounts are to become a part of Contractor's total bid. However, the Contracting Agency does not warrant expressly or by implication, that the actual amount of work will correspond with those estimates. Payment will be made on the basis of the amount of work actually authorized by Engineer.

INFORMATIONAL COPY ONLY - NOT FOR BIDDING

1-09.9 Payments
(March 13, 2012 APWA GSP)

Supplement this section with the following:

Lump sum item breakdowns are not required when the bid price for the lump sum item is less than $20,000.

Retainage

Section 1-09.9(1) content and title is deleted and replaced with the following:

(June 27, 2011)
Vacant

Disputes and Claims

1-09.11(3) Time Limitation and Jurisdiction
(November 30, 2018 APWA GSP)

Revise this section to read:

For the convenience of the parties to the Contract it is mutually agreed by the parties that any claims or causes of action which the Contractor has against the Contracting Agency arising from the Contract shall be brought within 180 calendar days from the date of final acceptance (Section 1-05.12) of the Contract by the Contracting Agency; and it is further agreed that any such claims or causes of action shall be brought only in the Superior Court of the county where the Contracting Agency headquarters is located, provided that where an action is asserted against a county, RCW 36.01.050 shall control venue and jurisdiction. The parties understand and agree that the Contractor's failure to bring suit within the time period provided, shall be a complete bar to any such claims or causes of action. It is further mutually agreed by the parties that when any claims or causes of action which the Contractor asserts against the Contracting Agency arising from the Contract are filed with the Contracting Agency or initiated in court, the Contractor shall permit the Contracting Agency to have timely access to any records deemed necessary by the Contracting Agency to assist in evaluating the claims or action.

1-09.13 Claims Resolution

1-09.13(3) Claims $250,000 or Less
(October 1, 2005 APWA GSP)

Delete this Section and replace it with the following:

The Contractor and the Contracting Agency mutually agree that those claims that total $250,000 or less, submitted in accordance with Section 1-09.11 and not resolved by nonbinding ADR processes, shall be resolved through litigation unless the parties mutually agree in writing to resolve the claim through binding arbitration.

INFORMATIONAL COPY ONLY - NOT FOR BIDDING

1-09.13(3)A Administration of Arbitration
(November 30, 2018 APWA GSP)

Revise the third paragraph to read:

The Contracting Agency and the Contractor mutually agree to be bound by the decision of the arbitrator, and judgment upon the award rendered by the arbitrator may be entered in the Superior Court of the county in which the Contracting Agency's headquarters is located, provided that where claims subject to arbitration are asserted against a county, RCW 36.01.050 shall control venue and jurisdiction of the Superior Court. The decision of the arbitrator and the specific basis for the decision shall be in writing. The arbitrator shall use the Contract as a basis for decisions.

1-10 Temporary Traffic Control

1-10.2 Traffic Control Management
General

Section 1-10.2(1) is supplemented with the following:
(January 3, 2017)
Only training with WSDOT TCS card and WSDOT training curriculum is recognized in the State of Washington. The Traffic Control Supervisor shall be certified by one of the following:

The Northwest Laborers-Employers Training Trust
27055 Ohio Ave.
Kingston, WA 98346
(360) 297-3035

Evergreen Safety Council
12545 135th Ave. NE
Kirkland, WA 98034-8709
1-800-521-0778

The American Traffic Safety Services Association
15 Riverside Parkway, Suite 100
Fredericksburg, Virginia 22406-1022
Training Dept. Toll Free (877) 642-4637
Phone: (540) 368-1701

1-10.2(2) Traffic Control Plans

Section 1-10.2(2) is supplemented with the following:

(******)
The County has provided the Traffic Control Plan(s) for this project and said plan(s) are included in these specifications and is made part of this contract.

The work contemplated in this contract will require the Contractor to take special precautions in implementing safe traffic control procedures in accordance with

INFORMATIONAL COPY ONLY - NOT FOR BIDDING

the MUTCD. The Contractor's attention is directed to WAC 296-155-305 as it relates to signing, signaling and flaggers. All questions concerning new standards should be directed to the Contracting Agency.

One-way traffic must be kept open during work hours and two-way traffic restored at the end of each working day for local traffic. Access to County road intersections, local farms and residences shall be kept open at all times.

Traffic Control Labor, Procedures and Devices

1-10.3(3) Traffic Control Devices

1-10.3(3)D Barricades

Section 1-10.3(3)D is supplemented with the following:

(******)
The barricades, provided by the contractor, shall be Type III and constructed in accordance with the details shown in the MUTCD and the Standard Plans. The barricade width shall be eight (8) feet.

As may be indicated in the Construction Sign Plan, Traffic Control Plan(s), or the Contract Provisions, the Contractor may be required to install signs, warning lights, or both, on barricades.

Any signs and/or lights that are added to a barricade shall meet NCHRP 350, MASH, or current standards, the Contractor shall provide verification of certification that these standards have been met.

1-10.4 Measurement

1-10.4(1) Lump Sum Bid for Project (No Unit Items)

Section 1-10.4(1) is supplemented with the following:

(August 2, 2004)
The proposal contains the item "Project Temporary Traffic Control", lump sum. The provisions of Section 1-10.4(1) shall apply.

DIVISION 8
MISCELLANEOUS CONSTRUCTION

8-21 Permanent Signing

INFORMATIONAL COPY ONLY - NOT FOR BIDDING

8-21.2 Material

Section 8-21.2 is supplemented with the following:

(******)
All signs shall have High-intensity prismatic retroreflective sheeting.

8-21.3(2) Construction Requirements

Section 8-21.3(2) is supplemented with the following:

(******)
Where detailed in the plans and staked by the Engineer, sign posts shall be installed in accordance with the applicable WSDOT Standard Plans. The Contractor shall verify ground conditions for each new sign location as staked by the Engineer.

The Contractor shall call in locates in advance of any excavation work per applicable State Laws; at least 2 business days in advance. 1-800-424-5555. Any delay(s) to the project stemming from failure to properly arrange locates shall be the responsibility of the Contractor.

All existing signs and hardware removed during the project shall be salvaged in the best condition possible and delivered to the Grant County Sign Shop, 124 Enterprise St. SE, Ephrata, WA, Monday through Friday, between the hours of 7:00AM and 3:00PM.

Existing posts removed during the project shall become the property of the Contractor.

All sign post lengths shall be determined by the Contractor and approved by the Engineer prior to installation.

8-21.4 Measurement

Section 8-21.4 is supplemented with the following:

(******)
Removal and installation of permanent signs will be measured by the unit per each.

8-21.5 Payment

Section 8-21.5 is supplemented with the following:

(******)
Payment will be made in accordance with Section 1-04.1, for each of the following bid items that are included in the Proposal:

"Remove Existing Warning Sign & Post", per each.
"36"x42" I7-701 Primitive Road No Warning Sign with Steel Sign Support Type ST-2", per each.
"30" Warning Sign with Steel Sign Support Type ST-2", per each.
"W1-6, Large Arrow 48"x24" with Steel Sign Support Type ST-2", per each.
"W1-7, Double Large Arrow 48"x24" with Steel Sign Support Type ST-2", per each.

INFORMATIONAL COPY ONLY - NOT FOR BIDDING

"W1-8, Chevron 18"x24" with Steel Sign Support Type ST-2 ", per each.
"W13-1P Speed Plaque", per each.

The unit contract price per each shall be full pay to complete the work as specified by the contract and as staked by the Engineer.

STANDARD PLANS
(August 1, 2016)

The State of Washington Standard Plans for Road, Bridge and Municipal Construction M21-01 transmitted under Publications Transmittal No. PT 16-048, effective August 1, 2016 is made a part of this contract.

INFORMATIONAL COPY ONLY - NOT FOR BIDDING

1

INFORMATIONAL COPY ONLY- NOT FOR BIDDING

PROPOSAL

To: Board of County Commissioners
Grant County, Washington

Date:_____, 2019

This certifies that the undersigned has examined the location of **Horizontal Curve Signs, Phase 3, CRP 18-06, in Grant County, Washington,** and that the plans, specifications and contract governing the work embraced in the improvement, and the method by which payment will be made for said work is understood. The undersigned hereby proposes to undertake and complete the work embraced in this improvement, or as much thereof as can be completed with the money available in accordance with said plans, specifications and contract and at the following schedule of rates and prices.

Horizontal Curve Signs, Phase 3

Note: Unit prices for all items, all extensions, and total amount must be shown. Please type or use ink. Please initial all changes.

Item No.	Plan Quantity	Item Description	Price per Unit* Dollars . Cents	Total Amount Dollars . Cents
PREPARATION				
1	1 Lump Sum	Mobilization	At ////////./////// Per Lump Sum	.
2	1 Lump Sum	Notification	At ////////./////// Per Lump Sum	.
TRAFFIC				
3	53 Each	Remove Existing Warning Sign & Post	At . Per Each	.
4	11 Each	36"x42" I7-701 Primitive Road No Warning Sign with Steel Sign Support Type ST-2	At . Per Each	.
5	151 Each	30" Warning Sign with Steel Sign Support Type ST-2	At . Per Each	.
6	10 Each	W1-6, Large Arrow 48" x 24" with Steel Sign Support Type ST-2	At . Per Each	.
7	1 Each	W1-7,Double Large Arrow 48" x 24" with Steel Sign Support Type ST-2	At . Per Each	.

READ ONLY INFORMATIONAL COPY NOT FOR BIDDING

Item No.	Plan Quantity	Item Description	Price per Unit* Dollars . Cents	Total Amount Dollars . Cents
8	1,124 Each	W1-8, Chevron 18" x 24" with Steel Sign Support Type ST-2	At . Per Each	.
9	144 Each	W13-1P Speed Plaque	At . Per Each	.
10	1 Lump Sum	Project Temporary Traffic Control	At ////////.///// Per Lump Sum	.
OTHER ITEMS				
11	1 Lump Sum	Spill Prevention, Control, and Countermeasure (SPCC) Plan	At ////////.///// Per Lump Sum	.
12	Calculated	Minor Changes	At -$1.00 Calculated	-$1.00

Contract Total	.

READ ONLY INFORMATION ONLY NOT FOR BIDDING

Certification of Compliance with Wage Payment Statutes

The bidder hereby certifies that, within the three-year period immediately preceding the bid solicitation date (7/3/2018), the bidder is not a "willful" violator, as defined in RCW 49.48.082, of any provision of chapters 49.46, 49.48, or 49.52 RCW, as determined by a final and binding citation and notice of assessment issued by the Department of Labor and Industries or through a civil judgment entered by a court of limited or general jurisdiction.

I certify under penalty of perjury under the laws of the State of Washington that the foregoing is true and correct.

_____
Bidder's Business Name

_____
Signature of Authorized Official*

_____
Printed Name

_____
Title

_____ _____ _____
Date City State

Check One:

Sole Proprietorship ☐ Partnership ☐ Joint Venture ☐ Corporation ☐

State of Incorporation, or if not a corporation, State where business entity was formed:

_____

If a co-partnership, give firm name under which business is transacted:

_____

**** If a corporation, proposal must be executed in the corporate name by the president or vice-president (or any other corporate officer accompanied by evidence of authority to sign). If a co-partnership, proposal must be executed by a partner.***

READ ONLY INFORMATION AND COPY NOT FOR BIDDING

Failure to return this Declaration as part of the bid proposal package will make the bid nonresponsive and ineligible for award.

NON-COLLUSION DECLARATION

I, by signing the proposal, hereby declare, under penalty of perjury under the laws of the United States that the following statements are true and correct:

1. That the undersigned person(s), firm, association, or corporation has (have) not, either directly or indirectly, entered into any agreement, participated in any collusion, or otherwise taken any action in restraint of free competitive bidding in connection with the project for which this proposal is submitted.

2. **That by signing the signature page of this proposal, I am deemed to have signed and to have agreed to the provisions of this declaration.**

Notice to All Bidders

To report rigging activities call:

1-800-424-9071

The U.S. Department of Transportation (USDOT) operates the above toll-free "hotline" Monday through Friday, 8:00 a.m. to 5:00 p.m., Eastern Time. Anyone with knowledge of possible bid rigging, bidder collusion, or other fraudulent activities should use the "hotline" to report such activities.

The "hotline" is part of USDOT's continuing effort to identify and investigate highway construction contract fraud and abuse and is operated under the direction of the USDOT Inspector General. All information will be treated confidentially and caller anonymity will be respected.

READ FOR INFORMATION ONLY - NOT FOR BIDDING

Proposal – Signature Page

The bidder is hereby advised that by signature of this proposal he/she is deemed to have acknowledged all requirements and signed all certificates contained herein.

A proposal guaranty in an amount of five percent (5%) of the total bid, based upon the approximate estimate of quantities at the above prices and in the form as indicated below, is attached hereto:

Cash	☐	In the Amount of _____
Cashier's Check	☐	_____ Dollars
Certified Check	☐	($_____) Payable to the Grant County Treasurer
Proposal Bond	☐	In the Amount of 5% of the Bid

Receipt is hereby acknowledged of addendum(s) No.(s) ____, ____ & ____.

Signature of Authorized Official(s)

Proposal Must Be Signed →

_____

_____

Please Print Name of Authorized Official

Firm Name _____

Address _____

_____

_____

State of Washington Contractor's License No. _____

Federal ID No. _____

Note:

(1) This proposal form is not transferable and any alteration entered hereon without prior permission from the County Engineer will be cause for considering the proposal irregular and subsequent rejection of bid.

(2) Please refer to section 1-02.6 of the standard specifications, re:"Preparation of Proposal" or "Article 4" of the instructions to bidders for building construction jobs.

(3) Should it be necessary to modify this proposal either in writing or by electronic means, please make reference to the following proposal number in your communication: _____

_____

Revised 8/95

READ ONLY INFORMATIONAL COPY NOT FOR BIDDING

Statement of Contractor Qualifications

To: Board of County Commissioners
Grant County, Washington

Date: _____, 2019

RE: **Horizontal Curve Signs, Phase 3, CRP 18-06**

I hereby maintain that I am a responsible bidder as contemplated by the policies of the State of Washington and Chapter 36.77 of the Revised Code of Washington.

1. My permanent business name and address is _____ which I have maintained for ____ years. My phone is (____)_____ Fax (____)_____
2. I have adequate plant equipment to expeditiously and properly perform the work contemplated for Grant County, Washington. **Description of work:** This contract provides for the installation of Traffic Control Devices, County Wide, on two lane county roads in Grant County, WA, and includes removing existing signs, installation of signs, project temporary traffic control and other work, all in accordance with the attached Contract Plans, these Contract Provisions and the Standard Specifications. (Please list equipment to be used on this project. Attach list if necessary.)
   _____
   _____
   _____
3. I have adequate funds to promptly meet obligations incident to this work. (Provide bank, contact & phone.) a) _____
   b) _____ c) _____
4. I have adequate experience in this class of work and I am thoroughly familiar with the specifications used in this project. I have constructed the following similar improvements: (Provide project name, contact & phone.)
   a) _____
   b) _____
   c) _____
5. I have submitted and maintain annually a "Standard Questionnaire and Financial Statement" to the Washington State Department of Transportation (WSDOT): Yes ☐ No ☐ Region: _____
   WSDOT has determined: a) I am prequalified to _____ _____ in the amount of _____.__
   b) I have failed to be prequalified for the following reasons: ___ _____.

   The Contracting Agency may determine a prospective Bidder who is not prequalified to perform certain types of work within the financial and experience constraints determined by WSDOT to be not responsible and refuse to award a contract.
   The Board of County Commissioners shall proceed to award the contract to the lowest and best bidder but may reject any or all bids if in its opinion good cause exists therefor. (RCW 36.77.040)

I hereby certify that the above statements are true and accurate.

Very truly yours,

By: _____
(Print Name) _____
Company Name: _____
Address: _____
City, State, Zip: _____
Washington State Contractor's License No.: _____

Revised 4/02

READ FOR INFORMATION ONLY - DO NOT COPY OR BIDDING

Bid Bond

KNOW ALL MEN BY THESE PRESENTS:

That we, _____, as Principal, and _____, as Surety, are held and firmly bound unto Grant County, Washington, as Obligee, in the penal sum of _____ Dollars ($_____) for the payment of which the Principal and Surety bind themselves, their heirs, executors, administrators, successors and assigns, jointly and severally, by these presents.

The condition of the obligation is such that if the Obligee shall make any award to the Principal for **Horizontal Curve Signs, Phase 3, CRP 18-06,** located in Grant County, Washington, according to the terms of the proposal or bid made by the Principal therefor, and the Principal shall duly make and enter into a contract with the Obligee in accordance with the terms of said proposal or bid and award and shall give bond for the faithful performance thereof, with the Surety or Sureties approved by the Obligee; or if the principal shall, in case of failure so to do, pay and forfeit to the Obligee the penal amount of the deposit specified in the call for bids, then this obligation shall be null and void; otherwise it shall be and remain in full force and effect and the Surety shall forthwith pay and forfeit to the Obligee, as penalty and liquidated damages, the amount of this bond.

SIGNED, SEALED AND DATED THIS ____ DAY OF _____ , 2019

Principal _____

Surety _____

Attorney-in-Fact _____

READ ONLY INFORMATIONAL COPY NOT FOR BIDDING

READ ONLY INFORMATION AND NOT FOR BIDDING

CONTRACT

THIS AGREEMENT, between the Board of County Commissioners of Grant County, State of Washington, acting under and by virtue of Chapter 36.77 of the Revised Code of Washington, as amended, hereinafter called the County, and _____, for itself, its heirs, executors, administrators, successors and assigns, hereinafter called the Contractor.

WITNESSETH:

That in consideration of the payments, covenants, and agreements, hereinafter mentioned, and attached and made a part of this agreement, to be made and performed by the parties hereto, and the parties hereto covenant and agree as follows:

DESCRIPTION OF WORK:

1. The Contractor shall do all work and furnish all tools, materials, and equipment necessary to improve and complete **Horizontal Curve Signs, Phase 3, CRP 18-06,** located in Grant County, Washington, as proposed in a bid opened **1:30 P.M., Tuesday, February 19, 2019** in accordance with and as described in the herein attached plans and standard specifications, and in full compliance with the terms, conditions, and stipulations herein set forth and attached, now referred to any by such reference incorporated herein and made part hereof as fully for all purposes as if here set forth at length, and shall perform any alterations in or additions to the work covered by this contract and every part thereof and any force account work may be ordered as provided in this contract and every part thereof.

2. The Contractor shall provide and be at the expense of all materials, labor, carriage, tools, implements and conveniences and things of every description that may be requisite for the transfer of materials and for constructing and completing the work provided for in this contract and every part thereof.

3. The County hereby promises and agrees with the Contractor to employ, and does employ the Contractor to provide the materials and to do and cause to be done the above described work and to complete and finish the same according to the attached plans and specifications and the terms and conditions herein contained, and hereby contracts to pay for the same according to the attached specifications and the schedule of unit or itemized prices hereto attached, at the time and in the manner and upon the conditions provided for in this contract and every part thereof. The County further agrees to employ the Contractor to perform any alterations in or additions to the work covered by this contract and every part thereof and any force account work that may be ordered and pay for same under the terms of this contract and the attached plans and specifications.

4. The Contractor for himself, and for his heirs, executors, administrators and assigns, and successors and assigns, does hereby agree to the full performance of all the covenants herein contained upon the part of the Contractor.

5. It is further provided that no liability shall attach to the County by reason of entering into this contract, except as expressly provided herein.

READ ONLY INFORMATION AND NOT FOR BIDDING

IN WITNESS WHEREOF, the said Contractor has executed this instrument, and the said Board of County Commissioners of Grant County has caused this instrument to be executed by and in the name of said Board by its Members, duly attested by its Clerk, the day and year below written, and the seal of said Board to be hereunto affixed on said date.

____day of _____, 2019

_____
Signature

_____
Print Name

_____
Firm Name

_____
Address

_____
City State Zip

(____)_____
Phone

ATTEST:

_____
Clerk of the Board

APPROVED AS TO FORM:

____day of _____, 2019

_____
Deputy Prosecuting Attorney

BOARD OF COUNTY COMMISSIONERS
OF GRANT COUNTY, WASHINGTON

Done this ____ day of _____, 2019

_____
Chair

_____
Member

_____
Member

READ ONLY INFORMATIONAL COPY NOT FOR BIDDING

CONTRACT BOND

KNOW ALL MEN BY THESE PRESENTS:

That we, the undersigned, _____, as principal, and _____, a corporation organized and existing under the laws of the State of _____, as surety corporation, and qualified under the laws of the State of Washington to become surety upon bonds of contractors with municipal corporations, as surety, are jointly and severally held and firmly bound to Grant County, Washington, in the penal sum of _____ ($_____) for the payment of which sum on demand we bind ourselves and our successors, heirs, administrators or personal representatives, as the case may be.

This obligation is entered into in pursuance of the statutes of the State of Washington, the Ordinances of Grant County, Washington.

Dated at _____, Washington, this ____ day of _____, 2019.

The conditions of the above obligation are such that:

WHEREAS, on **February 19, 2019**, the Board of County Commissioners of said Grant County has let or is about to let to the Principal, a certain contract, the said contract providing for the improvement of **Horizontal Curve Signs, Phase 3, CRP 18-06**, located in Grant County, Washington, (which contract is referred to herein and is made a part hereof as though attached hereto), and

WHEREAS, the said Principal has accepted, or is about to accept, the said contract, and undertake to perform the work therein provided for in the manner and within the time set forth;

NOW, THEREFORE, if the said Principal shall faithfully perform all of the provisions of said contract in the manner and within the time therein set forth or within such extensions of time as may be granted under said contract, and shall pay all laborers, mechanics, subcontractors and material men, and all persons who shall supply said Principal or subcontractors with provisions and supplies for the carrying on of said work, and shall hold said Grant County harmless from any loss or damage occasioned to any person or property by reason of any carelessness or negligence on the part of said Principal, or any subcontractor in the performance of said work and shall indemnify and hold Grant County harmless from any damage or expense by reason of failure of performance as specified in said contract or from defects appearing or developing in the material or workmanship provided or performed under said contract, and until the same is accepted, then and in that event this obligation shall be void but otherwise it shall be and remain in full force and effect.

Countersigned:

_____ _____

Licensed Agent/Surety Co. Principal

_____ _____

Attorney-in-Fact, Surety

_____ Approved as to form:

(_____)_____ _____, 2019

Firm, Street Address (No P.O. Box), Phone of Local Office of Agent Deputy Prosecuting Attorney

_____

Deputy Prosecuting Attorney

READ FOR MANEUVER CONDITIONS OR BINDING

READ ONLY INFORMATION AND NOT FOR BIDDING

Washington State Department of Transportation

Underutilized Disadvantaged Business Enterprise (UDBE) Written Confirmation Document

See Contract Provisions: UDBE Document Submittal Requirements
Disadvantaged Business Enterprise Participation

THIS FORM SHALL ONLY BE SUBMITTED TO A UDBE THAT IS LISTED ON THE CONTRACTOR'S UNDERUTILIZED DISADVANTAGED BUSINESS ENTERPRISE UTILIZATION CERTIFICATION.

THE CONTRACTOR SHALL COMPLETE PART A PRIOR TO SENDING TO THE UDBE.

PART A: To be completed by the bidder

The entries below shall be consistent with what is shown on the Bidder's Underutilized Disadvantaged Business Enterprise Utilization Certification. Failure to do so will result in Bid rejection.

Contract Title: _____

Bidder's Business Name: _____

UDBE's Business Name: _____

Description of UDBE's Work: _____

Dollar Amount to be Applied Towards UDBE Goal: _____

Dollar Amount to be Subcontracted to UDBE*: _____
*Optional Field

PART B: To be completed by the Underutilized Disadvantaged Business Enterprise

As an authorized representative of the Underutilized Disadvantaged Business Enterprise, I confirm that we have been contacted by the Bidder with regard to the referenced project for the purpose of performing the Work described above. If the Bidder is awarded the Contract, we will enter into an agreement with the Bidder to participate in the project consistent with the information provided in Part A of this form.

Name (printed): _____

Signature: _____

Title: _____

Address: _____ Date: _____

_____

INFORMATIONAL COPY ONLY - NOT FOR BIDDING

Washington State Department of Transportation

Underutilized Disadvantaged Business Enterprise Utilization Certification

To be eligible for Award of this Contract the Bidder shall fill out and submit, as a supplement to its sealed Bid Proposal, an Underutilized Disadvantaged Business Enterprise (UDBE) Utilization Certification. The Contracting Agency shall consider as non-responsive and shall reject any Bid Proposal that does not contain a UDBE Utilization Certification which properly demonstrates that the Bidder will meet the UDBE participation requirements in one of the manners provided for in the proposed Contract. **Refer to the instructions on Page 2 when filling out this form or the Bid may be rejected. An example form has been provided on Page 3.** The successful Bidder's UDBE Utilization Certification shall be deemed a part of the resulting Contract.

Box 1: _____ certifies that the UDBE firms listed below have been contacted regarding participation on this project. If this Bidder is successful on this project and is awarded the Contract, it shall assure that subcontracts or supply agreements are executed with named UDBEs. (If necessary, use additional sheets.)

Box 2: _____

Column 1 **Name of UDBE** (See instructions)	Column 2 **Project Role** (See instructions)	Column 3 **Description of Work** (See instructions)	Column 4 **Dollar Amount Subcontracted to UDBE** (See instructions)	Column 5 **Dollar Amount to be Applied Towards Goal** (See instructions)

Underutilized Disadvantaged Business Enterprise Condition of Award Contract Goal _____ Box 3

Total UDBE Commitment Dollar Amount _____ Box 4

5 ☐ By checking Box 5 the Bidder is stating that their attempts to solicit sufficient UDBE participation to meet the COA Contract goal has been unsuccessful and good faith effort will be submitted in accordance with Section 1-02.9 of the Contract

INFORMATIONAL COPY ONLY - NOT FOR BIDDING

Instructions for Underutilized Disadvantaged Business Enterprise Utilization Certification Form

Box 1: Name of Bidder (Proposal holder) submitting Bid.

Box 2: Name of the Project.

Column 1: Name of the Underutilized Disadvantaged Business Enterprise (UDBE). UDBE Firms can be found using the search tools under the Firm Certification section of the Diversity Management and Compliance System web page https://wsdot.diversitycompliance.com Repeat the name of the UDBE for each Project Role that will be performed.

Column 2: The Project Role that the UDBE will be performing as follows;

- Prime Contractor
- Subcontractor
- Subcontractor (Force Account)
  - Work sublet as Force Account must be listed separately.
- Manufacturer
- Regular Dealer
  - Work sublet to a Regular Dealer must be listed separately.
  - Regular Dealer status must be approved prior to Bid submittal by the Office of Equal Opportunity, Washington State Department of Transportation, on each Contract.
- Broker
  - Work sublet to a Broker must be listed separately.

List each project role to be performed by a single UDBE individually on a separate row(s). The role is used to determine what portion of the amount to be subcontracted (Column 4) may be applied toward meeting the goal (column 5).

Column 3: Provide a description of the work to be performed by the UDBE. The work to be performed must be consistent with the Certified Business Description of the UDBE provided at the Diversity Management and Compliance System web page https://wsdot.diversitycompliance.com

- A Bidder subletting a portion of a bid item shall state **"Partial"** and describe the Work that is included.
  - For example; "Electrical (Partial) – Trenching".
- "Mobilization" will not be accepted as a description of Work.

Column 4: List the total amount to be subcontracted to each UDBE for each Project Role they are performing.

Column 5: This is the dollar amount for each line listed in the certification that the prime intends to apply towards meeting the COA Contract goal. It may be that only a portion of the amount subcontracted to a UDBE in Column 4 is eligible to be credited toward meeting the goal **See Note 1, Note 2, Note 3.** The Contracting Agency will utilize the sum of this column (Box 4) to determine whether or not the bidder has met the goal. In the event of an arithmetic error in summing column 5 or an error in making appropriate reductions in the amounts in column four, **See Note 1, Note 2, Note 3**, then the mathematics will be corrected and the total (Box 4) will be revised accordingly.

Note 1: For Work sublet as Force Account the bidder **may only claim 50%** of the amount subcontracted (Column 4) towards meeting the goal (Column 5). This information will be used to demonstrate that the UDBE contract goal is met at the time that the bidder submits their bid. For example; amount sublet as force account = $100,000 (Column 4) equates to ($100,000 X 50%) = $50,000 (Column 5) to be applied towards the goal.

Note 2: For Work sublet to a Regular Dealer the bidder **may only claim 60%** of the cost of the materials or supplies (Column 4) towards meeting the goal (Column 5). For example; Material cost = $100,000 (Column 4) equates to ($100,000 X 60%) = $60,000 (Column 5) to be applied towards the goal

Note 3: For Work sublet to a Broker the bidder **may only claim the fees** paid to a Broker towards meeting the goal (Column 4). For example; amount sublet to a broker = $100,000 (Column 4) equates to ($100,000 X reasonable fee %) = $ (Column 5) to be applied towards the goal.

Box 3: Box 3 is the COA Contract goal which is the minimum required UDBE participation. The goal stated in the Contract will be in terms of a dollar amount or a percentage in the Contract. When expressed as a percentage you must multiply the percentage times the sum total of all bid items as submitted in the Bidder's Proposal to determine the dollar goal and write it in Box 3. In the event of an error in this box, the Contracting Agency will revise the amount accordingly.

Box 4: Box 4 is the sum of the values in column 5. **This value must equal or exceed the COA Contract goal amount written in Box 3 or;**

Box 5: Check Box 5 if insufficient UDBE Participation has been achieved and a good faith effort is required. Refer to the subsection titled, *Selection of Successful Bidder/Good Faith Efforts (GFE)* in the Contract.

See the *Disadvantaged Business Enterprise Participation* specification in the Contract for more information.

INFORMATIONAL COPY ONLY - NOT FOR BIDDING

REQUIRED CONTRACT PROVISIONS FEDERAL-AID CONSTRUCTION CONTRACTS
FHWA-1273 -- Revised May 1, 2012

I. General
II. Nondiscrimination
III. Nonsegregated Facilities
IV. Davis-Bacon and Related Act Provisions
V. Contract Work Hours and Safety Standards Act Provisions
VI. Subletting or Assigning the Contract
VII. Safety: Accident Prevention
VIII. False Statements Concerning Highway Projects
IX. Implementation of Clean Air Act and Federal Water Pollution Control Act
X. Compliance with Governmentwide Suspension and Debarment Requirements
XI. Certification Regarding Use of Contract Funds for Lobbying

ATTACHMENTS

A. Employment and Materials Preference for Appalachian Development Highway System or Appalachian Local Access Road Contracts (included in Appalachian contracts only)

INFORMATIONAL COPY ONLY - NOT FOR BIDDING

I. GENERAL

1. Form FHWA-1273 must be physically incorporated in each construction contract funded under Title 23 (excluding emergency contracts solely intended for debris removal). The contractor (or subcontractor) must insert this form in each subcontract and further require its inclusion in all lower tier subcontracts (excluding purchase orders, rental agreements and other agreements for supplies or services).

The applicable requirements of Form FHWA-1273 are incorporated by reference for work done under any purchase order, rental agreement or agreement for other services. The prime contractor shall be responsible for compliance by any subcontractor, lower-tier subcontractor or service provider.

Form FHWA-1273 must be included in all Federal-aid design-build contracts, in all subcontracts and in lower tier subcontracts (excluding subcontracts for design services, purchase orders, rental agreements and other agreements for supplies or services). The design-builder shall be responsible for compliance by any subcontractor, lower-tier subcontractor or service provider.

Contracting agencies may reference Form FHWA-1273 in bid proposal or request for proposal documents, however, the Form FHWA-1273 must be physically incorporated (not referenced) in all contracts, subcontracts and lower-tier subcontracts (excluding purchase orders, rental agreements and other agreements for supplies or services related to a construction contract).

2. Subject to the applicability criteria noted in the following sections, these contract provisions shall apply to all work performed on the contract by the contractor's own organization and with

the assistance of workers under the contractor's immediate superintendence and to all work performed on the contract by piecework, station work, or by subcontract.

3. A breach of any of the stipulations contained in these Required Contract Provisions may be sufficient grounds for withholding of progress payments, withholding of final payment, termination of the contract, suspension / debarment or any other action determined to be appropriate by the contracting agency and FHWA.

4. Selection of Labor: During the performance of this contract, the contractor shall not use convict labor for any purpose within the limits of a construction project on a Federal-aid highway unless it is labor performed by convicts who are on parole, supervised release, or probation. The term Federal-aid highway does not include roadways functionally classified as local roads or rural minor collectors.

II. NONDISCRIMINATION

The provisions of this section related to 23 CFR Part 230 are applicable to all Federal-aid construction contracts and to all related construction subcontracts of $10,000 or more. The provisions of 23 CFR Part 230 are not applicable to material supply, engineering, or architectural service contracts.

In addition, the contractor and all subcontractors must comply with the following policies: Executive Order 11246, 41 CFR 60, 29 CFR 1625-1627, Title 23 USC Section 140, the Rehabilitation Act of 1973, as amended (29 USC 794), Title VI of the Civil Rights Act of 1964, as amended, and related regulations including 49 CFR Parts 21, 26 and 27; and 23 CFR Parts 200, 230, and 633.

The contractor and all subcontractors must comply with: the requirements of the Equal Opportunity Clause in 41 CFR 60-1.4(b) and, for all construction contracts exceeding $10,000, the Standard Federal Equal Employment Opportunity Construction Contract Specifications in 41 CFR 60-4.3.

Note: The U.S. Department of Labor has exclusive authority to determine compliance with Executive Order 11246 and the policies of the Secretary of Labor including 41 CFR 60, and 29 CFR 1625-1627. The contracting agency and the FHWA have the authority and the responsibility to ensure compliance with Title 23 USC Section 140, the Rehabilitation Act of 1973, as amended (29 USC 794), and Title VI of the Civil Rights Act of 1964, as amended, and related regulations including 49 CFR Parts 21, 26 and 27; and 23 CFR Parts 200, 230, and 633.

The following provision is adopted from 23 CFR 230, Appendix A, with appropriate revisions to conform to the U.S. Department of Labor (US DOL) and FHWA requirements.

1. Equal Employment Opportunity: Equal employment opportunity (EEO) requirements not to discriminate and to take affirmative action to assure equal opportunity as set forth under laws, executive orders, rules, regulations (28 CFR 35, 29 CFR 1630, 29 CFR 1625-1627, 41 CFR 60 and 49 CFR 27) and orders of the Secretary of Labor as modified by the provisions prescribed herein, and imposed pursuant to 23 U.S.C. 140 shall constitute the EEO and specific affirmative action standards for the contractor's project activities under this contract. The provisions of the Americans with Disabilities Act of 1990 (42 U.S.C. 12101 et seq.) set forth under 28 CFR 35 and 29 CFR 1630 are incorporated by reference in this contract. In the execution of this

INFORMATIONAL COPY ONLY - NOT FOR BIDDING

contract, the contractor agrees to comply with the following minimum specific requirement activities of EEO:

a. The contractor will work with the contracting agency and the Federal Government to ensure that it has made every good faith effort to provide equal opportunity with respect to all of its terms and conditions of employment and in their review of activities under the contract.

b. The contractor will accept as its operating policy the following statement:

"It is the policy of this Company to assure that applicants are employed, and that employees are treated during employment, without regard to their race, religion, sex, color, national origin, age or disability. Such action shall include: employment, upgrading, demotion, or transfer; recruitment or recruitment advertising; layoff or termination; rates of pay or other forms of compensation; and selection for training, including apprenticeship, pre-apprenticeship, and/or on-the-job training."

2. EEO Officer: The contractor will designate and make known to the contracting officers an EEO Officer who will have the responsibility for and must be capable of effectively administering and promoting an active EEO program and who must be assigned adequate authority and responsibility to do so.

3. Dissemination of Policy: All members of the contractor's staff who are authorized to hire, supervise, promote, and discharge employees, or who recommend such action, or who are substantially involved in such action, will be made fully cognizant of, and will implement, the contractor's EEO policy and contractual responsibilities to provide EEO in each grade and classification of employment. To ensure that the above agreement will be met, the following actions will be taken as a minimum:

a. Periodic meetings of supervisory and personnel office employees will be conducted before the start of work and then not less often than once every six months, at which time the contractor's EEO policy and its implementation will be reviewed and explained. The meetings will be conducted by the EEO Officer.

b. All new supervisory or personnel office employees will be given a thorough indoctrination by the EEO Officer, covering all major aspects of the contractor's EEO obligations within thirty days following their reporting for duty with the contractor.

c. All personnel who are engaged in direct recruitment for the project will be instructed by the EEO Officer in the contractor's procedures for locating and hiring minorities and women.

d. Notices and posters setting forth the contractor's EEO policy will be placed in areas readily accessible to employees, applicants for employment and potential employees.

e. The contractor's EEO policy and the procedures to implement such policy will be brought to the attention of employees by means of meetings, employee handbooks, or other appropriate means.

4. Recruitment: When advertising for employees, the contractor will include in all advertisements for employees the notation: "An Equal Opportunity Employer." All such advertisements will be placed in publications having a large circulation among minorities and women in the area from which the project work force would normally be derived.

INFORMATIONAL COPY ONLY - NOT FOR BIDDING

a. The contractor will, unless precluded by a valid bargaining agreement, conduct systematic and direct recruitment through public and private employee referral sources likely to yield qualified minorities and women. To meet this requirement, the contractor will identify sources of potential minority group employees, and establish with such identified sources procedures whereby minority and women applicants may be referred to the contractor for employment consideration.

b. In the event the contractor has a valid bargaining agreement providing for exclusive hiring hall referrals, the contractor is expected to observe the provisions of that agreement to the extent that the system meets the contractor's compliance with EEO contract provisions. Where implementation of such an agreement has the effect of discriminating against minorities or women, or obligates the contractor to do the same, such implementation violates Federal nondiscrimination provisions.

c. The contractor will encourage its present employees to refer minorities and women as applicants for employment. Information and procedures with regard to referring such applicants will be discussed with employees.

5. Personnel Actions: Wages, working conditions, and employee benefits shall be established and administered, and personnel actions of every type, including hiring, upgrading, promotion, transfer, demotion, layoff, and termination, shall be taken without regard to race, color, religion, sex, national origin, age or disability. The following procedures shall be followed:

a. The contractor will conduct periodic inspections of project sites to insure that working conditions and employee facilities do not indicate discriminatory treatment of project site personnel.

b. The contractor will periodically evaluate the spread of wages paid within each classification to determine any evidence of discriminatory wage practices.

c. The contractor will periodically review selected personnel actions in depth to determine whether there is evidence of discrimination. Where evidence is found, the contractor will promptly take corrective action. If the review indicates that the discrimination may extend beyond the actions reviewed, such corrective action shall include all affected persons.

d. The contractor will promptly investigate all complaints of alleged discrimination made to the contractor in connection with its obligations under this contract, will attempt to resolve such complaints, and will take appropriate corrective action within a reasonable time. If the investigation indicates that the discrimination may affect persons other than the complainant, such corrective action shall include such other persons. Upon completion of each investigation, the contractor will inform every complainant of all of their avenues of appeal.

6. Training and Promotion:

a. The contractor will assist in locating, qualifying, and increasing the skills of minorities and women who are applicants for employment or current employees. Such efforts should be aimed at developing full journey level status employees in the type of trade or job classification involved.

INFORMATIONAL COPY ONLY - NOT FOR BIDDING

b. Consistent with the contractor's work force requirements and as permissible under Federal and State regulations, the contractor shall make full use of training programs, i.e., apprenticeship, and on-the-job training programs for the geographical area of contract performance. In the event a special provision for training is provided under this contract, this subparagraph will be superseded as indicated in the special provision. The contracting agency may reserve training positions for persons who receive welfare assistance in accordance with 23 U.S.C. 140(a).

c. The contractor will advise employees and applicants for employment of available training programs and entrance requirements for each.

d. The contractor will periodically review the training and promotion potential of employees who are minorities and women and will encourage eligible employees to apply for such training and promotion.

7. Unions: If the contractor relies in whole or in part upon unions as a source of employees, the contractor will use good faith efforts to obtain the cooperation of such unions to increase opportunities for minorities and women. Actions by the contractor, either directly or through a contractor's association acting as agent, will include the procedures set forth below:

a. The contractor will use good faith efforts to develop, in cooperation with the unions, joint training programs aimed toward qualifying more minorities and women for membership in the unions and increasing the skills of minorities and women so that they may qualify for higher paying employment.

b. The contractor will use good faith efforts to incorporate an EEO clause into each union agreement to the end that such union will be contractually bound to refer applicants without regard to their race, color, religion, sex, national origin, age or disability.

c. The contractor is to obtain information as to the referral practices and policies of the labor union except that to the extent such information is within the exclusive possession of the labor union and such labor union refuses to furnish such information to the contractor, the contractor shall so certify to the contracting agency and shall set forth what efforts have been made to obtain such information.

d. In the event the union is unable to provide the contractor with a reasonable flow of referrals within the time limit set forth in the collective bargaining agreement, the contractor will, through independent recruitment efforts, fill the employment vacancies without regard to race, color, religion, sex, national origin, age or disability; making full efforts to obtain qualified and/or qualifiable minorities and women. The failure of a union to provide sufficient referrals (even though it is obligated to provide exclusive referrals under the terms of a collective bargaining agreement) does not relieve the contractor from the requirements of this paragraph. In the event the union referral practice prevents the contractor from meeting the obligations pursuant to Executive Order 11246, as amended, and these special provisions, such contractor shall immediately notify the contracting agency.

8. Reasonable Accommodation for Applicants / Employees with Disabilities: The contractor must be familiar with the requirements for and comply with the Americans with Disabilities Act and all rules and regulations established there under. Employers must provide reasonable accommodation in all employment activities unless to do so would cause an undue hardship.

INFORMATIONAL COPY ONLY - NOT FOR BIDDING

9. Selection of Subcontractors, Procurement of Materials and Leasing of Equipment: The contractor shall not discriminate on the grounds of race, color, religion, sex, national origin, age or disability in the selection and retention of subcontractors, including procurement of materials and leases of equipment. The contractor shall take all necessary and reasonable steps to ensure nondiscrimination in the administration of this contract.

a. The contractor shall notify all potential subcontractors and suppliers and lessors of their EEO obligations under this contract.

b. The contractor will use good faith efforts to ensure subcontractor compliance with their EEO obligations.

10. Assurance Required by 49 CFR 26.13(b):

a. The requirements of 49 CFR Part 26 and the State DOT's U.S. DOT-approved DBE program are incorporated by reference.

b. The contractor or subcontractor shall not discriminate on the basis of race, color, national origin, or sex in the performance of this contract. The contractor shall carry out applicable requirements of 49 CFR Part 26 in the award and administration of DOT-assisted contracts. Failure by the contractor to carry out these requirements is a material breach of this contract, which may result in the termination of this contract or such other remedy as the contracting agency deems appropriate.

11. Records and Reports: The contractor shall keep such records as necessary to document compliance with the EEO requirements. Such records shall be retained for a period of three years following the date of the final payment to the contractor for all contract work and shall be available at reasonable times and places for inspection by authorized representatives of the contracting agency and the FHWA

a. The records kept by the contractor shall document the following:

(1) The number and work hours of minority and non-minority group members and women employed in each work classification on the project;

(2) The progress and efforts being made in cooperation with unions, when applicable, to increase employment opportunities for minorities and women; and

(3) The progress and efforts being made in locating, hiring, training, qualifying, and upgrading minorities and women;

b. The contractors and subcontractors will submit an annual report to the contracting agency each July for the duration of the project, indicating the number of minority, women, and non-minority group employees currently engaged in each work classification required by the contract work. This information is to be reported on Form FHWA-1391. The staffing data should represent the project work force on board in all or any part of the last payroll period preceding the end of July. If on-the-job training is being required by special provision, the contractor will be required to collect and report training data. The employment data should reflect the work force on board during all or any part of the last payroll period preceding the end of July.

INFORMATIONAL COPY ONLY - NOT FOR BIDDING

III. NONSEGREGATED FACILITIES

This provision is applicable to all Federal-aid construction contracts and to all related construction subcontracts of $10,000 or more.

The contractor must ensure that facilities provided for employees are provided in such a manner that segregation on the basis of race, color, religion, sex, or national origin cannot result. The contractor may neither require such segregated use by written or oral policies nor tolerate such use by employee custom. The contractor's obligation extends further to ensure that its employees are not assigned to perform their services at any location, under the contractor's control, where the facilities are segregated. The term "facilities" includes waiting rooms, work areas, restaurants and other eating areas, time clocks, restrooms, washrooms, locker rooms, and other storage or dressing areas, parking lots, drinking fountains, recreation or entertainment areas, transportation, and housing provided for employees. The contractor shall provide separate or single-user restrooms and necessary dressing or sleeping areas to assure privacy between sexes.

IV. DAVIS-BACON AND RELATED ACT PROVISIONS

This section is applicable to all Federal-aid construction projects exceeding $2,000 and to all related subcontracts and lower-tier subcontracts (regardless of subcontract size). The requirements apply to all projects located within the right-of-way of a roadway that is functionally classified as Federal-aid highway. This excludes roadways functionally classified as local roads or rural minor collectors, which are exempt. Contracting agencies may elect to apply these requirements to other projects.

The following provisions are from the U.S. Department of Labor regulations in 29 CFR 5.5 "Contract provisions and related matters" with minor revisions to conform to the FHWA-1273 format and FHWA program requirements.

1. Minimum wages

a. All laborers and mechanics employed or working upon the site of the work, will be paid unconditionally and not less often than once a week, and without subsequent deduction or rebate on any account (except such payroll deductions as are permitted by regulations issued by the Secretary of Labor under the Copeland Act (29 CFR part 3)), the full amount of wages and bona fide fringe benefits (or cash equivalents thereof) due at time of payment computed at rates not less than those contained in the wage determination of the Secretary of Labor which is attached hereto and made a part hereof, regardless of any contractual relationship which may be alleged to exist between the contractor and such laborers and mechanics.

Contributions made or costs reasonably anticipated for bona fide fringe benefits under section 1(b)(2) of the Davis-Bacon Act on behalf of laborers or mechanics are considered wages paid to such laborers or mechanics, subject to the provisions of paragraph 1.d. of this section; also, regular contributions made or costs incurred for more than a weekly period (but not less often than quarterly) under plans, funds, or programs which cover the particular weekly period, are deemed to be constructively made or incurred during such weekly period. Such laborers and

INFORMATIONAL COPY ONLY - NOT FOR BIDDING

mechanics shall be paid the appropriate wage rate and fringe benefits on the wage determination for the classification of work actually performed, without regard to skill, except as provided in 29 CFR 5.5(a)(4). Laborers or mechanics performing work in more than one classification may be compensated at the rate specified for each classification for the time actually worked therein: Provided, That the employer's payroll records accurately set forth the time spent in each classification in which work is performed. The wage determination (including any additional classification and wage rates conformed under paragraph 1.b. of this section) and the Davis-Bacon poster (WH–1321) shall be posted at all times by the contractor and its subcontractors at the site of the work in a prominent and accessible place where it can be easily seen by the workers.

b. (1) The contracting officer shall require that any class of laborers or mechanics, including helpers, which is not listed in the wage determination and which is to be employed under the contract shall be classified in conformance with the wage determination. The contracting officer shall approve an additional classification and wage rate and fringe benefits therefore only when the following criteria have been met:

(i) The work to be performed by the classification requested is not performed by a classification in the wage determination; and

(ii) The classification is utilized in the area by the construction industry; and

(iii) The proposed wage rate, including any bona fide fringe benefits, bears a reasonable relationship to the wage rates contained in the wage determination.

(2) If the contractor and the laborers and mechanics to be employed in the classification (if known), or their representatives, and the contracting officer agree on the classification and wage rate (including the amount designated for fringe benefits where appropriate), a report of the action taken shall be sent by the contracting officer to the Administrator of the Wage and Hour Division, Employment Standards Administration, U.S. Department of Labor, Washington, DC 20210. The Administrator, or an authorized representative, will approve, modify, or disapprove every additional classification action within 30 days of receipt and so advise the contracting officer or will notify the contracting officer within the 30-day period that additional time is necessary.

(3) In the event the contractor, the laborers or mechanics to be employed in the classification or their representatives, and the contracting officer do not agree on the proposed classification and wage rate (including the amount designated for fringe benefits, where appropriate), the contracting officer shall refer the questions, including the views of all interested parties and the recommendation of the contracting officer, to the Wage and Hour Administrator for determination. The Wage and Hour Administrator, or an authorized representative, will issue a determination within 30 days of receipt and so advise the contracting officer or will notify the contracting officer within the 30-day period that additional time is necessary.

(4) The wage rate (including fringe benefits where appropriate) determined pursuant to paragraphs 1.b.(2) or 1.b.(3) of this section, shall be paid to all workers performing work in the classification under this contract from the first day on which work is performed in the classification.

INFORMATIONAL COPY ONLY - NOT FOR BIDDING

c. Whenever the minimum wage rate prescribed in the contract for a class of laborers or mechanics includes a fringe benefit which is not expressed as an hourly rate, the contractor shall either pay the benefit as stated in the wage determination or shall pay another bona fide fringe benefit or an hourly cash equivalent thereof.

d. If the contractor does not make payments to a trustee or other third person, the contractor may consider as part of the wages of any laborer or mechanic the amount of any costs reasonably anticipated in providing bona fide fringe benefits under a plan or program, Provided, That the Secretary of Labor has found, upon the written request of the contractor, that the applicable standards of the Davis-Bacon Act have been met. The Secretary of Labor may require the contractor to set aside in a separate account assets for the meeting of obligations under the plan or program.

2. Withholding

The contracting agency shall upon its own action or upon written request of an authorized representative of the Department of Labor, withhold or cause to be withheld from the contractor under this contract, or any other Federal contract with the same prime contractor, or any other federally-assisted contract subject to Davis-Bacon prevailing wage requirements, which is held by the same prime contractor, so much of the accrued payments or advances as may be considered necessary to pay laborers and mechanics, including apprentices, trainees, and helpers, employed by the contractor or any subcontractor the full amount of wages required by the contract. In the event of failure to pay any laborer or mechanic, including any apprentice, trainee, or helper, employed or working on the site of the work, all or part of the wages required by the contract, the contracting agency may, after written notice to the contractor, take such action as may be necessary to cause the suspension of any further payment, advance, or guarantee of funds until such violations have ceased.

3. Payrolls and basic records

a. Payrolls and basic records relating thereto shall be maintained by the contractor during the course of the work and preserved for a period of three years thereafter for all laborers and mechanics working at the site of the work. Such records shall contain the name, address, and social security number of each such worker, his or her correct classification, hourly rates of wages paid (including rates of contributions or costs anticipated for bona fide fringe benefits or cash equivalents thereof of the types described in section 1(b)(2)(B) of the Davis-Bacon Act), daily and weekly number of hours worked, deductions made and actual wages paid. Whenever the Secretary of Labor has found under 29 CFR 5.5(a)(1)(iv) that the wages of any laborer or mechanic include the amount of any costs reasonably anticipated in providing benefits under a plan or program described in section 1(b)(2)(B) of the Davis-Bacon Act, the contractor shall maintain records which show that the commitment to provide such benefits is enforceable, that the plan or program is financially responsible, and that the plan or program has been communicated in writing to the laborers or mechanics affected, and records which show the costs anticipated or the actual cost incurred in providing such benefits. Contractors employing apprentices or trainees under approved programs shall maintain written evidence of the registration of apprenticeship programs and certification of trainee programs, the registration of the apprentices and trainees, and the ratios and wage rates prescribed in the applicable programs.

INFORMATIONAL COPY ONLY - NOT FOR BIDDING

b. (1) The contractor shall submit weekly for each week in which any contract work is performed a copy of all payrolls to the contracting agency. The payrolls submitted shall set out accurately and completely all of the information required to be maintained under 29 CFR 5.5(a)(3)(i), except that full social security numbers and home addresses shall not be included on weekly transmittals. Instead the payrolls shall only need to include an individually identifying number for each employee (e.g. , the last four digits of the employee's social security number). The required weekly payroll information may be submitted in any form desired. Optional Form WH–347 is available for this purpose from the Wage and Hour Division Web site at http://www.dol.gov/esa/whd/forms/wh347instr.htm or its successor site. The prime contractor is responsible for the submission of copies of payrolls by all subcontractors. Contractors and subcontractors shall maintain the full social security number and current address of each covered worker, and shall provide them upon request to the contracting agency for transmission to the State DOT, the FHWA or the Wage and Hour Division of the Department of Labor for purposes of an investigation or audit of compliance with prevailing wage requirements. It is not a violation of this section for a prime contractor to require a subcontractor to provide addresses and social security numbers to the prime contractor for its own records, without weekly submission to the contracting agency..

(2) Each payroll submitted shall be accompanied by a "Statement of Compliance," signed by the contractor or subcontractor or his or her agent who pays or supervises the payment of the persons employed under the contract and shall certify the following:

(i) That the payroll for the payroll period contains the information required to be provided under §5.5 (a)(3)(ii) of Regulations, 29 CFR part 5, the appropriate information is being maintained under §5.5 (a)(3)(i) of Regulations, 29 CFR part 5, and that such information is correct and complete;

(ii) That each laborer or mechanic (including each helper, apprentice, and trainee) employed on the contract during the payroll period has been paid the full weekly wages earned, without rebate, either directly or indirectly, and that no deductions have been made either directly or indirectly from the full wages earned, other than permissible deductions as set forth in Regulations, 29 CFR part 3;

(iii) That each laborer or mechanic has been paid not less than the applicable wage rates and fringe benefits or cash equivalents for the classification of work performed, as specified in the applicable wage determination incorporated into the contract.

(3) The weekly submission of a properly executed certification set forth on the reverse side of Optional Form WH–347 shall satisfy the requirement for submission of the "Statement of Compliance" required by paragraph 3.b.(2) of this section.

(4) The falsification of any of the above certifications may subject the contractor or subcontractor to civil or criminal prosecution under section 1001 of title 18 and section 231 of title 31 of the United States Code.

c. The contractor or subcontractor shall make the records required under paragraph 3.a. of this section available for inspection, copying, or transcription by authorized representatives of the contracting agency, the State DOT, the FHWA, or the Department of Labor, and shall permit such representatives to interview employees during working hours on the job. If the contractor or subcontractor fails to submit the required records or to make them available, the FHWA may,

INFORMATIONAL COPY ONLY - NOT FOR BIDDING

after written notice to the contractor, the contracting agency or the State DOT, take such action as may be necessary to cause the suspension of any further payment, advance, or guarantee of funds. Furthermore, failure to submit the required records upon request or to make such records available may be grounds for debarment action pursuant to 29 CFR 5.12.

4. Apprentices and trainees

a. Apprentices (programs of the USDOL).

Apprentices will be permitted to work at less than the predetermined rate for the work they performed when they are employed pursuant to and individually registered in a bona fide apprenticeship program registered with the U.S. Department of Labor, Employment and Training Administration, Office of Apprenticeship Training, Employer and Labor Services, or with a State Apprenticeship Agency recognized by the Office, or if a person is employed in his or her first 90 days of probationary employment as an apprentice in such an apprenticeship program, who is not individually registered in the program, but who has been certified by the Office of Apprenticeship Training, Employer and Labor Services or a State Apprenticeship Agency (where appropriate) to be eligible for probationary employment as an apprentice.

The allowable ratio of apprentices to journeymen on the job site in any craft classification shall not be greater than the ratio permitted to the contractor as to the entire work force under the registered program. Any worker listed on a payroll at an apprentice wage rate, who is not registered or otherwise employed as stated above, shall be paid not less than the applicable wage rate on the wage determination for the classification of work actually performed. In addition, any apprentice performing work on the job site in excess of the ratio permitted under the registered program shall be paid not less than the applicable wage rate on the wage determination for the work actually performed. Where a contractor is performing construction on a project in a locality other than that in which its program is registered, the ratios and wage rates (expressed in percentages of the journeyman's hourly rate) specified in the contractor's or subcontractor's registered program shall be observed.

Every apprentice must be paid at not less than the rate specified in the registered program for the apprentice's level of progress, expressed as a percentage of the journeymen hourly rate specified in the applicable wage determination. Apprentices shall be paid fringe benefits in accordance with the provisions of the apprenticeship program. If the apprenticeship program does not specify fringe benefits, apprentices must be paid the full amount of fringe benefits listed on the wage determination for the applicable classification. If the Administrator determines that a different practice prevails for the applicable apprentice classification, fringes shall be paid in accordance with that determination.

In the event the Office of Apprenticeship Training, Employer and Labor Services, or a State Apprenticeship Agency recognized by the Office, withdraws approval of an apprenticeship program, the contractor will no longer be permitted to utilize apprentices at less than the applicable predetermined rate for the work performed until an acceptable program is approved.

b. Trainees (programs of the USDOL).

Except as provided in 29 CFR 5.16, trainees will not be permitted to work at less than the predetermined rate for the work performed unless they are employed pursuant to and

INFORMATIONAL COPY ONLY - NOT FOR BIDDING

individually registered in a program which has received prior approval, evidenced by formal certification by the U.S. Department of Labor, Employment and Training Administration.

The ratio of trainees to journeymen on the job site shall not be greater than permitted under the plan approved by the Employment and Training Administration.

Every trainee must be paid at not less than the rate specified in the approved program for the trainee's level of progress, expressed as a percentage of the journeyman hourly rate specified in the applicable wage determination. Trainees shall be paid fringe benefits in accordance with the provisions of the trainee program. If the trainee program does not mention fringe benefits, trainees shall be paid the full amount of fringe benefits listed on the wage determination unless the Administrator of the Wage and Hour Division determines that there is an apprenticeship program associated with the corresponding journeyman wage rate on the wage determination which provides for less than full fringe benefits for apprentices. Any employee listed on the payroll at a trainee rate who is not registered and participating in a training plan approved by the Employment and Training Administration shall be paid not less than the applicable wage rate on the wage determination for the classification of work actually performed. In addition, any trainee performing work on the job site in excess of the ratio permitted under the registered program shall be paid not less than the applicable wage rate on the wage determination for the work actually performed.

In the event the Employment and Training Administration withdraws approval of a training program, the contractor will no longer be permitted to utilize trainees at less than the applicable predetermined rate for the work performed until an acceptable program is approved.

c. Equal employment opportunity. The utilization of apprentices, trainees and journeymen under this part shall be in conformity with the equal employment opportunity requirements of Executive Order 11246, as amended, and 29 CFR part 30.

d. Apprentices and Trainees (programs of the U.S. DOT).

Apprentices and trainees working under apprenticeship and skill training programs which have been certified by the Secretary of Transportation as promoting EEO in connection with Federal-aid highway construction programs are not subject to the requirements of paragraph 4 of this Section IV. The straight time hourly wage rates for apprentices and trainees under such programs will be established by the particular programs. The ratio of apprentices and trainees to journeymen shall not be greater than permitted by the terms of the particular program.

5. Compliance with Copeland Act requirements. The contractor shall comply with the requirements of 29 CFR part 3, which are incorporated by reference in this contract.

6. Subcontracts. The contractor or subcontractor shall insert Form FHWA-1273 in any subcontracts and also require the subcontractors to include Form FHWA-1273 in any lower tier subcontracts. The prime contractor shall be responsible for the compliance by any subcontractor or lower tier subcontractor with all the contract clauses in 29 CFR 5.5.

7. Contract termination: debarment. A breach of the contract clauses in 29 CFR 5.5 may be grounds for termination of the contract, and for debarment as a contractor and a subcontractor as provided in 29 CFR 5.12.

INFORMATIONAL COPY ONLY - NOT FOR BIDDING

8. Compliance with Davis-Bacon and Related Act requirements. All rulings and interpretations of the Davis-Bacon and Related Acts contained in 29 CFR parts 1, 3, and 5 are herein incorporated by reference in this contract.

9. Disputes concerning labor standards. Disputes arising out of the labor standards provisions of this contract shall not be subject to the general disputes clause of this contract. Such disputes shall be resolved in accordance with the procedures of the Department of Labor set forth in 29 CFR parts 5, 6, and 7. Disputes within the meaning of this clause include disputes between the contractor (or any of its subcontractors) and the contracting agency, the U.S. Department of Labor, or the employees or their representatives.

10. Certification of eligibility.

a. By entering into this contract, the contractor certifies that neither it (nor he or she) nor any person or firm who has an interest in the contractor's firm is a person or firm ineligible to be awarded Government contracts by virtue of section 3(a) of the Davis-Bacon Act or 29 CFR 5.12(a)(1).

b. No part of this contract shall be subcontracted to any person or firm ineligible for award of a Government contract by virtue of section 3(a) of the Davis-Bacon Act or 29 CFR 5.12(a)(1).

c. The penalty for making false statements is prescribed in the U.S. Criminal Code, 18 U.S.C. 1001.

V. CONTRACT WORK HOURS AND SAFETY STANDARDS ACT

The following clauses apply to any Federal-aid construction contract in an amount in excess of $100,000 and subject to the overtime provisions of the Contract Work Hours and Safety Standards Act. These clauses shall be inserted in addition to the clauses required by 29 CFR 5.5(a) or 29 CFR 4.6. As used in this paragraph, the terms laborers and mechanics include watchmen and guards.

1. Overtime requirements. No contractor or subcontractor contracting for any part of the contract work which may require or involve the employment of laborers or mechanics shall require or permit any such laborer or mechanic in any workweek in which he or she is employed on such work to work in excess of forty hours in such workweek unless such laborer or mechanic receives compensation at a rate not less than one and one-half times the basic rate of pay for all hours worked in excess of forty hours in such workweek.

2. Violation; liability for unpaid wages; liquidated damages. In the event of any violation of the clause set forth in paragraph (1.) of this section, the contractor and any subcontractor responsible therefor shall be liable for the unpaid wages. In addition, such contractor and subcontractor shall be liable to the United States (in the case of work done under contract for the District of Columbia or a territory, to such District or to such territory), for liquidated damages. Such liquidated damages shall be computed with respect to each individual laborer or mechanic, including watchmen and guards, employed in violation of the clause set forth in paragraph (1.) of this section, in the sum of $10 for each calendar day on which such individual

INFORMATIONAL COPY ONLY - NOT FOR BIDDING

was required or permitted to work in excess of the standard workweek of forty hours without payment of the overtime wages required by the clause set forth in paragraph (1.) of this section.

3. Withholding for unpaid wages and liquidated damages. The FHWA or the contacting agency shall upon its own action or upon written request of an authorized representative of the Department of Labor withhold or cause to be withheld, from any moneys payable on account of work performed by the contractor or subcontractor under any such contract or any other Federal contract with the same prime contractor, or any other federally-assisted contract subject to the Contract Work Hours and Safety Standards Act, which is held by the same prime contractor, such sums as may be determined to be necessary to satisfy any liabilities of such contractor or subcontractor for unpaid wages and liquidated damages as provided in the clause set forth in paragraph (2.) of this section.

4. Subcontracts. The contractor or subcontractor shall insert in any subcontracts the clauses set forth in paragraph (1.) through (4.) of this section and also a clause requiring the subcontractors to include these clauses in any lower tier subcontracts. The prime contractor shall be responsible for compliance by any subcontractor or lower tier subcontractor with the clauses set forth in paragraphs (1.) through (4.) of this section.

VI. SUBLETTING OR ASSIGNING THE CONTRACT

This provision is applicable to all Federal-aid construction contracts on the National Highway System.

1. The contractor shall perform with its own organization contract work amounting to not less than 30 percent (or a greater percentage if specified elsewhere in the contract) of the total original contract price, excluding any specialty items designated by the contracting agency. Specialty items may be performed by subcontract and the amount of any such specialty items performed may be deducted from the total original contract price before computing the amount of work required to be performed by the contractor's own organization (23 CFR 635.116).

a. The term "perform work with its own organization" refers to workers employed or leased by the prime contractor, and equipment owned or rented by the prime contractor, with or without operators. Such term does not include employees or equipment of a subcontractor or lower tier subcontractor, agents of the prime contractor, or any other assignees. The term may include payments for the costs of hiring leased employees from an employee leasing firm meeting all relevant Federal and State regulatory requirements. Leased employees may only be included in this term if the prime contractor meets all of the following conditions:

(1) the prime contractor maintains control over the supervision of the day-to-day activities of the leased employees;

(2) the prime contractor remains responsible for the quality of the work of the leased employees;

(3) the prime contractor retains all power to accept or exclude individual employees from work on the project; and

INFORMATIONAL COPY ONLY - NOT FOR BIDDING

(4) the prime contractor remains ultimately responsible for the payment of predetermined minimum wages, the submission of payrolls, statements of compliance and all other Federal regulatory requirements.

b. "Specialty Items" shall be construed to be limited to work that requires highly specialized knowledge, abilities, or equipment not ordinarily available in the type of contracting organizations qualified and expected to bid or propose on the contract as a whole and in general are to be limited to minor components of the overall contract.

2. The contract amount upon which the requirements set forth in paragraph (1) of Section VI is computed includes the cost of material and manufactured products which are to be purchased or produced by the contractor under the contract provisions.

3. The contractor shall furnish (a) a competent superintendent or supervisor who is employed by the firm, has full authority to direct performance of the work in accordance with the contract requirements, and is in charge of all construction operations (regardless of who performs the work) and (b) such other of its own organizational resources (supervision, management, and engineering services) as the contracting officer determines is necessary to assure the performance of the contract.

4. No portion of the contract shall be sublet, assigned or otherwise disposed of except with the written consent of the contracting officer, or authorized representative, and such consent when given shall not be construed to relieve the contractor of any responsibility for the fulfillment of the contract. Written consent will be given only after the contracting agency has assured that each subcontract is evidenced in writing and that it contains all pertinent provisions and requirements of the prime contract.

5. The 30% self-performance requirement of paragraph (1) is not applicable to design-build contracts; however, contracting agencies may establish their own self-performance requirements.

VII. SAFETY: ACCIDENT PREVENTION

This provision is applicable to all Federal-aid construction contracts and to all related subcontracts.

1. In the performance of this contract the contractor shall comply with all applicable Federal, State, and local laws governing safety, health, and sanitation (23 CFR 635). The contractor shall provide all safeguards, safety devices and protective equipment and take any other needed actions as it determines, or as the contracting officer may determine, to be reasonably necessary to protect the life and health of employees on the job and the safety of the public and to protect property in connection with the performance of the work covered by the contract.

2. It is a condition of this contract, and shall be made a condition of each subcontract, which the contractor enters into pursuant to this contract, that the contractor and any subcontractor shall not permit any employee, in performance of the contract, to work in surroundings or under conditions which are unsanitary, hazardous or dangerous to his/her health or safety, as determined under construction safety and health standards (29 CFR 1926) promulgated by the Secretary of Labor, in accordance with Section 107 of the Contract Work Hours and Safety Standards Act (40 U.S.C. 3704).

INFORMATIONAL COPY ONLY - NOT FOR BIDDING

3. Pursuant to 29 CFR 1926.3, it is a condition of this contract that the Secretary of Labor or authorized representative thereof, shall have right of entry to any site of contract performance to inspect or investigate the matter of compliance with the construction safety and health standards and to carry out the duties of the Secretary under Section 107 of the Contract Work Hours and Safety Standards Act (40 U.S.C.3704).

VIII. FALSE STATEMENTS CONCERNING HIGHWAY PROJECTS

This provision is applicable to all Federal-aid construction contracts and to all related subcontracts.

In order to assure high quality and durable construction in conformity with approved plans and specifications and a high degree of reliability on statements and representations made by engineers, contractors, suppliers, and workers on Federal-aid highway projects, it is essential that all persons concerned with the project perform their functions as carefully, thoroughly, and honestly as possible. Willful falsification, distortion, or misrepresentation with respect to any facts related to the project is a violation of Federal law. To prevent any misunderstanding regarding the seriousness of these and similar acts, Form FHWA-1022 shall be posted on each Federal-aid highway project (23 CFR 635) in one or more places where it is readily available to all persons concerned with the project:

18 U.S.C. 1020 reads as follows:

"Whoever, being an officer, agent, or employee of the United States, or of any State or Territory, or whoever, whether a person, association, firm, or corporation, knowingly makes any false statement, false representation, or false report as to the character, quality, quantity, or cost of the material used or to be used, or the quantity or quality of the work performed or to be performed, or the cost thereof in connection with the submission of plans, maps, specifications, contracts, or costs of construction on any highway or related project submitted for approval to the Secretary of Transportation; or

Whoever knowingly makes any false statement, false representation, false report or false claim with respect to the character, quality, quantity, or cost of any work performed or to be performed, or materials furnished or to be furnished, in connection with the construction of any highway or related project approved by the Secretary of Transportation; or

Whoever knowingly makes any false statement or false representation as to material fact in any statement, certificate, or report submitted pursuant to provisions of the Federal-aid Roads Act approved July 1, 1916, (39 Stat. 355), as amended and supplemented;

Shall be fined under this title or imprisoned not more than 5 years or both."

IX. IMPLEMENTATION OF CLEAN AIR ACT AND FEDERAL WATER POLLUTION CONTROL ACT

This provision is applicable to all Federal-aid construction contracts and to all related subcontracts.

INFORMATIONAL COPY ONLY - NOT FOR BIDDING

By submission of this bid/proposal or the execution of this contract, or subcontract, as appropriate, the bidder, proposer, Federal-aid construction contractor, or subcontractor, as appropriate, will be deemed to have stipulated as follows:

1. That any person who is or will be utilized in the performance of this contract is not prohibited from receiving an award due to a violation of Section 508 of the Clean Water Act or Section 306 of the Clean Air Act.
2. That the contractor agrees to include or cause to be included the requirements of paragraph (1) of this Section X in every subcontract, and further agrees to take such action as the contracting agency may direct as a means of enforcing such requirements.

X. CERTIFICATION REGARDING DEBARMENT, SUSPENSION, INELIGIBILITY AND VOLUNTARY EXCLUSION

This provision is applicable to all Federal-aid construction contracts, design-build contracts, subcontracts, lower-tier subcontracts, purchase orders, lease agreements, consultant contracts or any other covered transaction requiring FHWA approval or that is estimated to cost $25,000 or more – as defined in 2 CFR Parts 180 and 1200.

1. **Instructions for Certification – First Tier Participants:**

a. By signing and submitting this proposal, the prospective first tier participant is providing the certification set out below.

b. The inability of a person to provide the certification set out below will not necessarily result in denial of participation in this covered transaction. The prospective first tier participant shall submit an explanation of why it cannot provide the certification set out below. The certification or explanation will be considered in connection with the department or agency's determination whether to enter into this transaction. However, failure of the prospective first tier participant to furnish a certification or an explanation shall disqualify such a person from participation in this transaction.

c. The certification in this clause is a material representation of fact upon which reliance was placed when the contracting agency determined to enter into this transaction. If it is later determined that the prospective participant knowingly rendered an erroneous certification, in addition to other remedies available to the Federal Government, the contracting agency may terminate this transaction for cause of default.

d. The prospective first tier participant shall provide immediate written notice to the contracting agency to whom this proposal is submitted if any time the prospective first tier participant learns that its certification was erroneous when submitted or has become erroneous by reason of changed circumstances.

e. The terms "covered transaction," "debarred," "suspended," "ineligible," "participant," "person," "principal," and "voluntarily excluded," as used in this clause, are defined in 2 CFR Parts 180 and 1200. "First Tier Covered Transactions" refers to any covered transaction between a grantee or subgrantee of Federal funds and a participant (such as the prime or

INFORMATIONAL COPY ONLY - NOT FOR BIDDING

general contract). "Lower Tier Covered Transactions" refers to any covered transaction under a First Tier Covered Transaction (such as subcontracts). "First Tier Participant" refers to the participant who has entered into a covered transaction with a grantee or subgrantee of Federal funds (such as the prime or general contractor). "Lower Tier Participant" refers any participant who has entered into a covered transaction with a First Tier Participant or other Lower Tier Participants (such as subcontractors and suppliers).

f. The prospective first tier participant agrees by submitting this proposal that, should the proposed covered transaction be entered into, it shall not knowingly enter into any lower tier covered transaction with a person who is debarred, suspended, declared ineligible, or voluntarily excluded from participation in this covered transaction, unless authorized by the department or agency entering into this transaction.

g. The prospective first tier participant further agrees by submitting this proposal that it will include the clause titled "Certification Regarding Debarment, Suspension, Ineligibility and Voluntary Exclusion-Lower Tier Covered Transactions," provided by the department or contracting agency, entering into this covered transaction, without modification, in all lower tier covered transactions and in all solicitations for lower tier covered transactions exceeding the $25,000 threshold.

h. A participant in a covered transaction may rely upon a certification of a prospective participant in a lower tier covered transaction that is not debarred, suspended, ineligible, or voluntarily excluded from the covered transaction, unless it knows that the certification is erroneous. A participant is responsible for ensuring that its principals are not suspended, debarred, or otherwise ineligible to participate in covered transactions. To verify the eligibility of its principals, as well as the eligibility of any lower tier prospective participants, each participant may, but is not required to, check the Excluded Parties List System website (https://www.epls.gov/), which is compiled by the General Services Administration.

i. Nothing contained in the foregoing shall be construed to require the establishment of a system of records in order to render in good faith the certification required by this clause. The knowledge and information of the prospective participant is not required to exceed that which is normally possessed by a prudent person in the ordinary course of business dealings.

j. Except for transactions authorized under paragraph (f) of these instructions, if a participant in a covered transaction knowingly enters into a lower tier covered transaction with a person who is suspended, debarred, ineligible, or voluntarily excluded from participation in this transaction, in addition to other remedies available to the Federal Government, the department or agency may terminate this transaction for cause or default.

* * * * *

2. Certification Regarding Debarment, Suspension, Ineligibility and Voluntary Exclusion – First Tier Participants:

a. The prospective first tier participant certifies to the best of its knowledge and belief, that it and its principals:

(1) Are not presently debarred, suspended, proposed for debarment, declared ineligible, or voluntarily excluded from participating in covered transactions by any Federal department or agency;

INFORMATIONAL COPY ONLY - NOT FOR BIDDING

(2) Have not within a three-year period preceding this proposal been convicted of or had a civil judgment rendered against them for commission of fraud or a criminal offense in connection with obtaining, attempting to obtain, or performing a public (Federal, State or local) transaction or contract under a public transaction; violation of Federal or State antitrust statutes or commission of embezzlement, theft, forgery, bribery, falsification or destruction of records, making false statements, or receiving stolen property;

(3) Are not presently indicted for or otherwise criminally or civilly charged by a governmental entity (Federal, State or local) with commission of any of the offenses enumerated in paragraph (a)(2) of this certification; and

(4) Have not within a three-year period preceding this application/proposal had one or more public transactions (Federal, State or local) terminated for cause or default.

b. Where the prospective participant is unable to certify to any of the statements in this certification, such prospective participant shall attach an explanation to this proposal.

2. **Instructions for Certification - Lower Tier Participants:**

(Applicable to all subcontracts, purchase orders and other lower tier transactions requiring prior FHWA approval or estimated to cost $25,000 or more - 2 CFR Parts 180 and 1200)

a. By signing and submitting this proposal, the prospective lower tier is providing the certification set out below.

b. The certification in this clause is a material representation of fact upon which reliance was placed when this transaction was entered into. If it is later determined that the prospective lower tier participant knowingly rendered an erroneous certification, in addition to other remedies available to the Federal Government, the department, or agency with which this transaction originated may pursue available remedies, including suspension and/or debarment.

c. The prospective lower tier participant shall provide immediate written notice to the person to which this proposal is submitted if at any time the prospective lower tier participant learns that its certification was erroneous by reason of changed circumstances.

d. The terms "covered transaction," "debarred," "suspended," "ineligible," "participant," "person," "principal," and "voluntarily excluded," as used in this clause, are defined in 2 CFR Parts 180 and 1200. You may contact the person to which this proposal is submitted for assistance in obtaining a copy of those regulations. "First Tier Covered Transactions" refers to any covered transaction between a grantee or subgrantee of Federal funds and a participant (such as the prime or general contract). "Lower Tier Covered Transactions" refers to any covered transaction under a First Tier Covered Transaction (such as subcontracts). "First Tier Participant" refers to the participant who has entered into a covered transaction with a grantee or subgrantee of Federal funds (such as the prime or general contractor). "Lower Tier Participant" refers any participant who has entered into a covered transaction with a First Tier Participant or other Lower Tier Participants (such as subcontractors and suppliers).

e. The prospective lower tier participant agrees by submitting this proposal that, should the proposed covered transaction be entered into, it shall not knowingly enter into any lower tier covered transaction with a person who is debarred, suspended, declared ineligible, or

INFORMATIONAL COPY ONLY - NOT FOR BIDDING

voluntarily excluded from participation in this covered transaction, unless authorized by the department or agency with which this transaction originated.

f. The prospective lower tier participant further agrees by submitting this proposal that it will include this clause titled "Certification Regarding Debarment, Suspension, Ineligibility and Voluntary Exclusion-Lower Tier Covered Transaction," without modification, in all lower tier covered transactions and in all solicitations for lower tier covered transactions exceeding the $25,000 threshold.

g. A participant in a covered transaction may rely upon a certification of a prospective participant in a lower tier covered transaction that is not debarred, suspended, ineligible, or voluntarily excluded from the covered transaction, unless it knows that the certification is erroneous. A participant is responsible for ensuring that its principals are not suspended, debarred, or otherwise ineligible to participate in covered transactions. To verify the eligibility of its principals, as well as the eligibility of any lower tier prospective participants, each participant may, but is not required to, check the Excluded Parties List System website (https://www.epls.gov/), which is compiled by the General Services Administration.

h. Nothing contained in the foregoing shall be construed to require establishment of a system of records in order to render in good faith the certification required by this clause. The knowledge and information of participant is not required to exceed that which is normally possessed by a prudent person in the ordinary course of business dealings.

i. Except for transactions authorized under paragraph e of these instructions, if a participant in a covered transaction knowingly enters into a lower tier covered transaction with a person who is suspended, debarred, ineligible, or voluntarily excluded from participation in this transaction, in addition to other remedies available to the Federal Government, the department or agency with which this transaction originated may pursue available remedies, including suspension and/or debarment.

* * * * *

Certification Regarding Debarment, Suspension, Ineligibility and Voluntary Exclusion--Lower Tier Participants:

1. The prospective lower tier participant certifies, by submission of this proposal, that neither it nor its principals is presently debarred, suspended, proposed for debarment, declared ineligible, or voluntarily excluded from participating in covered transactions by any Federal department or agency.

2. Where the prospective lower tier participant is unable to certify to any of the statements in this certification, such prospective participant shall attach an explanation to this proposal.

* * * * *

INFORMATIONAL COPY ONLY - NOT FOR BIDDING

XI. CERTIFICATION REGARDING USE OF CONTRACT FUNDS FOR LOBBYING

This provision is applicable to all Federal-aid construction contracts and to all related subcontracts which exceed $100,000 (49 CFR 20).

1. The prospective participant certifies, by signing and submitting this bid or proposal, to the best of his or her knowledge and belief, that:

a. No Federal appropriated funds have been paid or will be paid, by or on behalf of the undersigned, to any person for influencing or attempting to influence an officer or employee of any Federal agency, a Member of Congress, an officer or employee of Congress, or an employee of a Member of Congress in connection with the awarding of any Federal contract, the making of any Federal grant, the making of any Federal loan, the entering into of any cooperative agreement, and the extension, continuation, renewal, amendment, or modification of any Federal contract, grant, loan, or cooperative agreement.

b. If any funds other than Federal appropriated funds have been paid or will be paid to any person for influencing or attempting to influence an officer or employee of any Federal agency, a Member of Congress, an officer or employee of Congress, or an employee of a Member of Congress in connection with this Federal contract, grant, loan, or cooperative agreement, the undersigned shall complete and submit Standard Form-LLL, "Disclosure Form to Report Lobbying," in accordance with its instructions.

2. This certification is a material representation of fact upon which reliance was placed when this transaction was made or entered into. Submission of this certification is a prerequisite for making or entering into this transaction imposed by 31 U.S.C. 1352. Any person who fails to file the required certification shall be subject to a civil penalty of not less than $10,000 and not more than $100,000 for each such failure.

3. The prospective participant also agrees by submitting its bid or proposal that the participant shall require that the language of this certification be included in all lower tier subcontracts, which exceed $100,000 and that all such recipients shall certify and disclose accordingly.

INFORMATIONAL COPY ONLY - NOT FOR BIDDING

ATTACHMENT A - EMPLOYMENT AND MATERIALS PREFERENCE FOR APPALACHIAN DEVELOPMENT HIGHWAY SYSTEM OR APPALACHIAN LOCAL ACCESS ROAD CONTRACTS

This provision is applicable to all Federal-aid projects funded under the Appalachian Regional Development Act of 1965.

1. During the performance of this contract, the contractor undertaking to do work which is, or reasonably may be, done as on-site work, shall give preference to qualified persons who regularly reside in the labor area as designated by the DOL wherein the contract work is situated, or the subregion, or the Appalachian counties of the State wherein the contract work is situated, except:

a. To the extent that qualified persons regularly residing in the area are not available.

b. For the reasonable needs of the contractor to employ supervisory or specially experienced personnel necessary to assure an efficient execution of the contract work.

c. For the obligation of the contractor to offer employment to present or former employees as the result of a lawful collective bargaining contract, provided that the number of nonresident persons employed under this subparagraph (1c) shall not exceed 20 percent of the total number of employees employed by the contractor on the contract work, except as provided in subparagraph (4) below.

2. The contractor shall place a job order with the State Employment Service indicating (a) the classifications of the laborers, mechanics and other employees required to perform the contract work, (b) the number of employees required in each classification, (c) the date on which the participant estimates such employees will be required, and (d) any other pertinent information required by the State Employment Service to complete the job order form. The job order may be placed with the State Employment Service in writing or by telephone. If during the course of the contract work, the information submitted by the contractor in the original job order is substantially modified, the participant shall promptly notify the State Employment Service.

3. The contractor shall give full consideration to all qualified job applicants referred to him by the State Employment Service. The contractor is not required to grant employment to any job applicants who, in his opinion, are not qualified to perform the classification of work required.

4. If, within one week following the placing of a job order by the contractor with the State Employment Service, the State Employment Service is unable to refer any qualified job applicants to the contractor, or less than the number requested, the State Employment Service will forward a certificate to the contractor indicating the unavailability of applicants. Such certificate shall be made a part of the contractor's permanent project records. Upon receipt of this certificate, the contractor may employ persons who do not normally reside in the labor area to fill positions covered by the certificate, notwithstanding the provisions of subparagraph (1c) above.

5.The provisions of 23 CFR 633.207(e) allow the contracting agency to provide a contractual preference for the use of mineral resource materials native to the Appalachian region.

6. The contractor shall include the provisions of Sections 1 through 4 of this Attachment A in every subcontract for work which is, or reasonably may be, done as on-site work.

INFORMATIONAL COPY ONLY - NOT FOR BIDDING

AMENDMENT
REQUIRED CONTRACT PROVISIONS
(Exclusive of Appalachian Contracts)

FEDERAL-AID CONSTRUCTION CONTRACTS

The Federal–Aid provisions are supplemented with the following:

XII. Cargo Preference Act

1. U.S. Department of Transportation Federal Highway Administration memorandum dated December 11, 2015 requires that all federal-aid highway programs awarded after February 15, 2016 must comply with the Cargo Preference Act and its regulation of 46 CFR 381.7 (a)-(b).

INFORMATIONAL COPY ONLY- NOT FOR BIDDING

General Decision Number: WA190001 01/18/2019 WA1

Superseded General Decision Number: WA20180001

State: Washington

Construction Type: Highway

Counties: Washington Statewide.

HIGHWAY (Excludes D.O.E. Hanford Site in Benton and Franklin Counties)

Note: Under Executive Order (EO) 13658, an hourly minimum wage of $10.60 for calendar year 2019 applies to all contracts subject to the Davis-Bacon Act for which the contract is awarded (and any solicitation was issued) on or after January 1, 2015. If this contract is covered by the EO, the contractor must pay all workers in any classification listed on this wage determination at least $10.60 per hour (or the applicable wage rate listed on this wage determination, if it is higher) for all hours spent performing on the contract in calendar year 2019. If this contract is covered by the EO and a classification considered necessary for performance of work on the contract does not appear on this wage determination, the contractor must pay workers in that classification at least the wage rate determined through the conformance process set forth in 29 CFR 5.5(a)(1)(ii) (or the EO minimum wage rate,if it is higher than the conformed wage rate). The EO minimum wage rate will be adjusted annually. Please note that this EO applies to the above-mentioned types of contracts entered into by the federal government that are subject to the Davis-Bacon Act itself, but it does not apply to contracts subject only to the Davis-Bacon Related Acts, including those set forth at 29 CFR 5.1(a)(2)-(60). Additional information on contractor requirements and worker protections under the EO is available at www.dol.gov/whd/govcontracts.

Modification Number	Publication Date
0	01/04/2019
1	**01/18/2019**

INFORMATIONAL COPY ONLY - NOT FOR BIDDING

CARP0001-008 06/01/2018

ADAMS, ASOTIN, BENTON, CHELAN, COLUMBIA, DOUGLAS, FERRY, FRANKLIN, GARFIELD, GRANT, KITTITAS, LINCOLN, OKANOGAN, PEND OREILLE, SPOKANE, STEVENS, WALLA WALLA, WHITMAN, and YAKIMA Counties

	Rates	Fringes
CARPENTER		
GROUP 1	$ 33.40	16.40
GROUP 2	$ 45.42	18.83
GROUP 3	$ 34.52	16.40
GROUP 4	$ 34.52	16.40
GROUP 5	$ 77.52	16.40
GROUP 6	$ 37.76	16.40
GROUP 7	$ 38.76	16.40
GROUP 8	$ 35.52	16.40
GROUP 9	$ 41.76	16.40

CARPENTER & DIVER CLASSIFICATIONS:

GROUP 1: Carpenter

GROUP 2: Millwright, Machine Erector

GROUP 3: Piledriver - includes driving, pulling, cutting, placing collars, setting, welding, or creosote treated material, on all piling

GROUP 4: Bridge, Dock, and Wharf carpenters

GROUP 5: Diver Wet

GROUP 6: Diver Tender, Manifold Operator, ROV Operator

GROUP 7: Diver Standby

GROUP 8: Assistant Diver Tender, ROV Tender/Technician

GROUP 9: Manifold Operator-Mixed Gas

ZONE PAY:

ZONE 1	0-60 MILES	FREE
ZONE 2	61-100	$4.00/PER HOUR
ZONE 3	OVER 100 MILES	$6.00/PER HOUR

DISPATCH POINTS:

CARPENTERS/MILLWRIGHTS: PASCO (515 N Neel Street) or Main Post Office of established residence of employee (Whichever is closest to the worksite).

CARPENTERS/PILEDRIVER: SPOKANE (127 E. AUGUSTA AVE.) or Main Post Office of established residence of employee (Whichever is closest to the worksite).

INFORMATIONAL COPY ONLY - NOT FOR BIDDING

CARPENTERS: WENATCHEE (27 N. CHELAN) or Main Post Office of established residence of employee (Whichever is closest to the worksite).

CARPENTERS: COEUR D' ALENE (1839 N. GOVERNMENT WAY) or Main Post Office of established residence of employee (Whichever is closest to the worksite).

CARPENTERS: MOSCOW (306 N. JACKSON) or Main Post Office of established residence of employee (Whichever is closest to the worksite).

DEPTH PAY FOR DIVERS BELOW WATER SURFACE:
50-100 feet $2.00 per foot
101-150 feet $3.00 per foot
151-220 feet $4.00 per foot
221 feet and deeper $5.00 per foot

PREMIUM PAY FOR DIVING IN ENCLOSURES WITH NO VERTICAL ASCENT:
0-25 feet Free
26-300 feet $1.00 per Foot

SATURATION DIVING:
The standby rate applies until saturation starts. The saturation diving rate applies when divers are under pressure continuously until work task and decompression are complete. the diver rate shall be paid for all saturation hours.

WORK IN COMBINATION OF CLASSIFICATIONS:
Employees working in any combination of classifications within the diving crew (except dive supervisor) in a shift are paid in the classification with the highest rate for that shift.

HAZMAT PROJECTS:

Anyone working on a HAZMAT job (task), where HAZMAT certification is required, shall be compensated at a premium, in addition to the classification working in as follows:

LEVEL D + $.25 per hour - This is the lowest level of protection. No respirator is used and skin protection is minimal.

LEVEL C + $.50 per hour - This level uses an air purifying respirator or additional protective clothing.

LEVEL B + $.75 per hour - Uses same respirator protection as Level A. Supplied air line is provided in conjunction with a chemical "splash suit".

LEVEL A +$1.00 per hour - This level utilizes a fully encapsulated suit with a self-contained breathing apparatus or a supplied air line.

INFORMATIONAL COPY ONLY - NOT FOR BIDDING

CARP0003-006 06/01/2018

SOUTHWEST WASHINGTON: CLARK, COWLITZ, KLICKITAT, LEWIS(Piledriver only), PACIFIC (South of a straight line made by extending the north boundary line of Wahkiakum County west to Willapa Bay to the Pacific Ocean), SKAMANIA, and WAHKIAKUM Counties.

	Rates	Fringes
Carpenters:		
CARPENTERS	$ 37.64	16.83
DIVERS TENDERS	$ 43.73	16.83
DIVERS	$ 87.73	16.83
DRYWALL	$ 37.64	16.83
MILLWRIGHTS	$ 38.17	16.83
PILEDRIVERS	$ 38.71	16.83

DEPTH PAY:
50 TO 100 FEET $1.00 PER FOOT OVER 50 FEET
101 TO 150 FEET $1.50 PER FOOT OVER 101 FEET
151 TO 200 FEET $2.00 PER FOOT OVER 151 FEET

Zone Differential (Add up Zone 1 rates):
Zone 2 - $0.85
Zone 3 - 1.25
Zone 4 - 1.70
Zone 5 - 2.00
Zone 6 - 3.00

BASEPOINTS: ASTORIA, LONGVIEW, PORTLAND, THE DALLES, AND VANCOUVER, (NOTE: All dispatches for Washington State Counties: Cowlitz, Wahkiakum and Pacific shall be from Longview Local #1707 and mileage shall be computed from that point.)

ZONE 1: Projects located within 30 miles of the respective city hall of the above mentioned cities
ZONE 2: Projects located more than 30 miles and less than 40 miles of the respective city of the above mentioned cities
ZONE 3: Projects located more than 40 miles and less than 50 miles of the respective city of the above mentioned cities
ZONE 4: Projects located more than 50 miles and less than 60 miles of the respective city of the above mentioned cities.
ZONE 5: Projects located more than 60 miles and less than 70 miles of the respective city of the above mentioned cities
ZONE 6: Projects located more than 70 miles of the respected city of the above mentioned cities

---

INFORMATIONAL COPY ONLY- NOT FOR BIDDING

CARP0770-003 06/01/2018

	Rates	Fringes
CARPENTER		
CENTRAL WASHINGTON: CHELAN, DOUGLAS (WEST OF THE 120TH MERIDIAN), KITTITAS, OKANOGAN (WEST OF THE 120TH MERIDIAN) AND YAKIMA COUNTIES		
CARPENTERS ON CREOSOTE MATERIAL	$ 29.15	13.93
CARPENTERS	$ 29.05	13.93
DIVERS TENDER	$ 48.59	16.12
DIVERS	$ 97.43	16.12
MILLWRIGHT AND MACHINE ERECTORS	$ 45.42	16.12
PILEDRIVER, DRIVING, PULLING, CUTTING, PLACING COLLARS, SETTING, WELDING OR CRESOTE TREATED MATERIAL, ALL PILING	$ 44.17	13.93

(HOURLY ZONE PAY: WESTERN AND CENTRAL WASHINGTON - ALL CLASSIFICATIONS EXCEPT MILLWRIGHTS AND PILEDRIVERS

Hourly Zone Pay shall be paid on jobs located outside of the free zone computed from the city center of the following listed cities:

Seattle	Olympia	Bellingham
Auburn	Bremerton	Anacortes
Renton	Shelton	Yakima
Aberdeen-Hoquiam	Tacoma	Wenatchee
Ellensburg	Everett	Port Angeles
Centralia	Mount Vernon	Sunnyside
Chelan	Pt. Townsend	

Zone Pay:

0 -25 radius miles	Free
26-35 radius miles	$1.00/hour
36-45 radius miles	$1.15/hour
46-55 radius miles	$1.35/hour
Over 55 radius miles	$1.55/hour

(HOURLY ZONE PAY: WESTERN AND CENTRAL WASHINGTON - MILLWRIGHT AND PILEDRIVER ONLY)

Hourly Zone Pay shall be computed from Seattle Union Hall, Tacoma City center, and Everett City center

Zone Pay:

0 -25 radius miles	Free
26-45 radius miles	$ .70/hour
Over 45 radius miles	$1.50/hour

INFORMATIONAL COPY ONLY - NOT FOR BIDDING

CARP0770-006 06/01/2018

	Rates	Fringes
CARPENTER		
WESTERN WASHINGTON: CLALLAM, GRAYS HARBOR, ISLAND, JEFFERSON, KING, KITSAP, LEWIS (excludes piledrivers only), MASON, PACIFIC (North of a straight line made by extending the north boundary line of Wahkiakum County west to the Pacific Ocean), PIERCE, SAN JUAN, SKAGIT, SNOHOMISH, THURSTON AND WHATCOM COUNTIES		
BRIDGE CARPENTERS.....	$ 43.92	16.12
CARPENTERS ON CREOSOTE MATERIAL.....	$ 44.02	16.12
CARPENTERS.....	$ 43.92	16.12
DIVERS TENDER.....	$ 48.59	16.12
DIVERS.....	$ 97.48	16.12
MILLWRIGHT AND MACHINE ERECTORS.....	$ 45.42	16.12
PILEDRIVER, DRIVING, PULLING, CUTTING, PLACING COLLARS, SETTING, WELDING OR CRESOTE TREATED MATERIAL, ALL PILING.....	$ 44.17	16.12

(HOURLY ZONE PAY: WESTERN AND CENTRAL WASHINGTON - ALL CLASSIFICATIONS EXCEPT MILLWRIGHTS AND PILEDRIVERS

Hourly Zone Pay shall be paid on jobs located outside of the free zone computed from the city center of the following listed cities:

Seattle	Olympia	Bellingham
Auburn	Bremerton	Anacortes
Renton	Shelton	Yakima
Aberdeen-Hoquiam	Tacoma	Wenatchee
Ellensburg	Everett	Port Angeles
Centralia	Mount Vernon	Sunnyside
Chelan	Pt. Townsend	

Zone Pay:

0 -25 radius miles	Free
26-35 radius miles	$1.00/hour
36-45 radius miles	$1.15/hour
46-55 radius miles	$1.35/hour
Over 55 radius miles	$1.55/hour

(HOURLY ZONE PAY: WESTERN AND CENTRAL WASHINGTON - MILLWRIGHT AND PILEDRIVER ONLY)

Hourly Zone Pay shall be computed from Seattle Union Hall, Tacoma City center, and Everett City center

Zone Pay:

0 -25 radius miles	Free
26-45 radius miles	$ .70/hour
Over 45 radius miles	$1.50/hour

INFORMATIONAL COPY ONLY - NOT FOR BIDDING

ELEC0046-001 08/06/2018

CALLAM, JEFFERSON, KING AND KITSAP COUNTIES

	Rates	Fringes
CABLE SPLICER	$ 55.627	3%+20.21
ELECTRICIAN	$ 50.57	3%+20.21

---

* ELEC0048-003 01/01/2018

CLARK, KLICKITAT AND SKAMANIA COUNTIES

	Rates	Fringes
CABLE SPLICER	$ 44.22	21.50
ELECTRICIAN	$ 42.60	22.75

HOURLY ZONE PAY:

Hourly Zone Pay shall be paid on jobs located outside of the free zone computed from the city center of the following listed cities:

Portland, The Dalles, Hood River, Tillamook, Seaside and Astoria

Zone Pay:
Zone 1: 31-50 miles $1.50/hour
Zone 2: 51-70 miles $3.50/hour
Zone 3: 71-90 miles $5.50/hour
Zone 4: Beyond 90 miles $9.00/hour

*These are not miles driven. Zones are based on Delorrne Street Atlas USA 2006 Plus.

ELEC0048-029 01/01/2018

COWLITZ AND WAHKIAKUM COUNTY

	Rates	Fringes
CABLE SPLICER	$ 44.22	21.50
ELECTRICIAN	$ 42.60	22.75

---

* ELEC0073-001 01/01/2019

ADAMS, FERRY, LINCOLN, PEND OREILLE, SPOKANE, STEVENS, WHITMAN COUNTIES

	Rates	Fringes
CABLE SPLICER	$ 34.10	16.68
ELECTRICIAN	**$ 34.30**	**18.88**

INFORMATIONAL COPY ONLY - NOT FOR BIDDING

ELEC0076-002 08/31/2018

GRAYS HARBOR, LEWIS, MASON, PACIFIC, PIERCE, AND THURSTON COUNTIES

	Rates	Fringes
CABLE SPLICER	$ 48.06	23.23
ELECTRICIAN	$ 43.69	23.10

ELEC0112-005 06/01/2018

ASOTIN, BENTON, COLUMBIA, FRANKLIN, GARFIELD, KITTITAS, WALLA WALLA, YAKIMA COUNTIES

	Rates	Fringes
CABLE SPLICER	$ 45.68	20.60
ELECTRICIAN	$ 43.50	20.54

ELEC0191-003 06/01/2018

ISLAND, SAN JUAN, SNOHOMISH, SKAGIT AND WHATCOM COUNTIES

	Rates	Fringes
CABLE SPLICER	$ 44.23	17.73
ELECTRICIAN	$ 44.95	21.42

ELEC0191-004 06/01/2018

CHELAN, DOUGLAS, GRANT AND OKANOGAN COUNTIES

	Rates	Fringes
CABLE SPLICER	$ 40.82	17.63
ELECTRICIAN	$ 42.45	21.34

INFORMATIONAL COPY ONLY - NOT FOR BIDDING

ENGI0302-003 06/01/2018

CHELAN (WEST OF THE 120TH MERIDIAN), CLALLAM, DOUGLAS (WEST OF THE 120TH MERIDIAN), GRAYS HARBOR, ISLAND, JEFFERSON, KING, KITSAP, KITTITAS, MASON, OKANOGAN (WEST OF THE 120TH MERIDIAN), SAN JUNA, SKAGIT, SNOHOMISH, WHATCOM AND YAKIMA (WEST OF THE 120TH MERIDIAN) COUNTIES

Zone 1 (0-25 radius miles):

	Rates	Fringes
POWER EQUIPMENT OPERATOR		
Group 1A	$ 44.44	19.97
Group 1AA	$ 45.09	19.97
Group 1AAA	$ 45.73	19.97
Group 1	$ 43.79	19.97
Group 2	$ 43.23	19.97
Group 3	$ 42.74	19.97
Group 4	$ 40.01	19.97

Zone Differential (Add to Zone 1 rates):
Zone 2 (26-45 radius miles) - $1.00
Zone 3 (Over 45 radius miles) - $1.30

BASEPOINTS: Aberdeen, Bellingham, Bremerton, Everett, Kent, Mount Vernon, Port Angeles, Port Townsend, Seattle, Shelton, Wenatchee, Yakima

POWER EQUIPMENT OPERATORS CLASSIFICATIONS

GROUP 1AAA - Cranes-over 300 tons, or 300 ft of boom (including jib with attachments)

GROUP 1AA - Cranes 200 to 300 tons, or 250 ft of boom (including jib with attachments); Tower crane over 175 ft in height, base to boom

GROUP 1A - Cranes, 100 tons thru 199 tons, or 150 ft of boom (including jib with attachments); Crane-overhead, bridge type, 100 tons and over; Tower crane up to 175 ft in height base to boom; Loaders-overhead, 8 yards and over; Shovels, excavator, backhoes-6 yards and over with attachments

GROUP 1 - Cableway; Cranes 45 tons thru 99 tons, under 150 ft of boom (including jib with attachments); Crane-overhead, bridge type, 45 tons thru 99 tons; Derricks on building work; Excavator, shovel, backhoes over 3 yards and under 6 yards; Hard tail end dump articulating off-road equipment 45 yards and over; Loader- overhead 6 yards to, but not including 8 yards; Mucking machine, mole, tunnel, drill and/or shield; Quad 9, HD 41, D-10; Remote control operator on rubber tired earth moving equipment; Rollagon; Scrapers-self propelled 45 yards and over; Slipform pavers; Transporters, all truck or track type

INFORMATIONAL COPY ONLY- NOT FOR BIDDING

GROUP 2 - Barrier machine (zipper); Batch Plant Operaor-Concrete; Bump Cutter; Cranes, 20 tons thru 44 tons with attachments; Crane-overhead, bridge type-20 tons through 44 tons; Chipper; Concrete Pump-truck mount with boom attachment; Crusher; Deck Engineer/Deck Winches (power); Drilling machine; Excavator, shovel, backhoe-3yards and under; Finishing Machine, Bidwell, Gamaco and similar equipment; Guardrail punch; Horizontal/directional drill operator; Loaders-overhead under 6 yards; Loaders-plant feed; Locomotives-all; Mechanics-all; Mixers-asphalt plant; Motor patrol graders-finishing; Piledriver (other than crane mount); Roto-mill,roto-grinder; Screedman, spreader, topside operator-Blaw Knox, Cedar Rapids, Jaeger, Caterpillar, Barbar Green; Scraper-self propelled, hard tail end dump, articulating off-road equipment-under 45 yards; Subgrade trimmer; Tractors, backhoes-over 75 hp; Transfer material service machine-shuttle buggy, blaw knox-roadtec; Truck crane oiler/driver-100 tons and over; Truck Mount portable conveyor; Yo Yo Pay dozer

GROUP 3 - Conveyors; Cranes-thru 19 tons with attachments; A-frame crane over 10 tons; Drill oilers-auger type, truck or crane mount; Dozers-D-9 and under; Forklift-3000 lbs. and over with attachments; Horizontal/directional drill locator; Outside hoists-(elevators and manlifts), air tuggers, strato tower bucket elevators; Hydralifts/boom trucks over 10 tons; Loader-elevating type, belt; Motor patrol grader-nonfinishing; Plant oiler- asphalt, crusher; Pumps-concrete; Roller, plant mix or multi-lift materials; Saws-concrete; Scrpers-concrete and carry-all; Service engineer-equipment; Trenching machines; Truck Crane Oiler/Driver under 100 tons; Tractors, backhoe 75 hp and under

GROUP 4 - Assistant Engineer; Bobcat; Brooms; Compressor; Concrete finish mahine laser screed; Cranes-A frame-10 tons and under; Elevator and Manlift-permanent or shaft type; Gradechecker, Stakehop; Forklifts under 3000 lbs. with attachments; Hydralifts/boom trucks, 10 tons and under; Oil distributors, blower distribution and mulch seeding operator; Pavement breaker; Posthole digger, mechanical; Power plant; Pumps, water; Rigger and Bellman; Roller-other than plant mix; Wheel Tractors, farmall type; Shotcrete/gunite equipment operator

INFORMATIONAL COPY ONLY - NOT FOR BIDDING

HANDLING OF HAZARDOUS WASTE MATERIALS:

Personnel in all craft classifications subject to working inside a federally designated hazardous perimeter shall be elgible for compensation in accordance with the following group schedule relative to the level of hazardous waste as outlined in the specific hazardous waste project site safety plan.

H-1 Base wage rate when on a hazardous waste site when not outfitted with protective clothing

H-2 Class "C" Suit - Base wage rate plus $ .25 per hour.

H-3 Class "B" Suit - Base wage rate plus $ .50 per hour.

H-4 Class "A" Suit - Base wage rate plus $ .75 per hour.

ENGI0370-002 06/01/2018

ADAMS, ASOTIN, BENTON, CHELAN (EAST OF THE 120TH MERIDIAN), COLUMBIA, DOUGLAS (EAST OF THE 120TH MERIDIAN), FERRY, FRANKLIN, GARFIELD, GRANT, LINCOLN, OKANOGAN (EAST OF THE 120TH MERIDIAN), PEND OREILLE, SPOKANE, STEVENS, WALLA WALLA, WHITMAN AND YAKIMA (EAST OF THE 120TH MERIDIAN) COUNTIES

ZONE 1:

	Rates	Fringes
POWER EQUIPMENT OPERATOR		
GROUP 1	$ 27.51	15.95
GROUP 2	$ 27.83	15.95
GROUP 3	$ 28.44	15.95
GROUP 4	$ 28.60	15.95
GROUP 5	$ 28.76	15.95
GROUP 6	$ 29.04	15.95
GROUP 7	$ 29.31	15.95
GROUP 8	$ 30.41	15.95

ZONE DIFFERENTIAL (Add to Zone 1 rate): Zone 2 - $2.00

Zone 1: Within 45 mile radius of Spokane, Pasco, Washington; Lewiston, Idaho

Zone 2: Outside 45 mile radius of Spokane, Pasco, Washington; Lewiston, Idaho

INFORMATIONAL COPY ONLY - NOT FOR BIDDING

POWER EQUIPMENT OPERATORS CLASSIFICATIONS

GROUP 1: Bit Grinders; Bolt Threading Machine; Compressors (under 2000 CFM, gas, diesel, or electric power); Deck Hand; Fireman & Heater Tender; Hydro-seeder, Mulcher, Nozzleman; Oiler Driver, & Cable Tender, Mucking Machine; Pumpman; Rollers, all types on subgrade, including seal and chip coatings (farm type, Case, John Deere & similar, or Compacting Vibrator), except when pulled by Dozer with operable blade; Welding Machine; Crane Oiler-Driver (CLD required) & Cable Tender, Mucking Machine

GROUP 2: A-frame Truck (single drum); Assistant Refrigeration Plant (under 1000 ton); Assistant Plant Operator, Fireman or Pugmixer (asphalt); Bagley or Stationary Scraper; Belt Finishing Machine; Blower Operator (cement); Cement Hog; Compressor (2000 CFM or over, 2 or more, gas diesel or electric power); Concrete Saw (multiple cut); Distributor Leverman; Ditch Witch or similar; Elevator Hoisting Materials; Dope Pots (power agitated); Fork Lift or Lumber Stacker, hydra-lift & similar; Gin Trucks (pipeline); Hoist, single drum; Loaders (bucket elevators and conveyors); Longitudinal Float; Mixer (portable-concrete); Pavement Breaker, Hydra-Hammer & similar; Power Broom; Railroad Ballast Regulation Operator (self-propelled); Railroad Power Tamper Operator (self-propelled); Railroad Tamper Jack Operator (self-propelled; Spray Curing Machine (concrete); Spreader Box (self-propelled); Straddle Buggy (Ross & similar on construction job only); Tractor (Farm type R/T with attachment, except Backhoe); Tugger Operator

GROUP 3: A-frame Truck (2 or more drums); Assistant Refrigeration Plant & Chiller Operator (over 1000 ton); Backfillers (Cleveland & similar); Batch Plant & Wet Mix Operator, single unit (concrete); Belt-Crete Conveyors with power pack or similar; Belt Loader (Kocal or similar); Bending Machine; Bob Cat (Skid Steer); Boring Machine (earth); Boring Machine (rock under 8 inch bit) (Quarry Master, Joy or similar); Bump Cutter (Wayne, Saginau or similar); Canal Lining Machine (concrete); Chipper (without crane); Cleaning & Doping Machine (pipeline); Deck Engineer; Elevating Belt-type Loader (Euclid, Barber Green & similar); Elevating Grader-type Loader (Dumor, Adams or similar); Generator Plant Engineers (diesel or electric); Gunnite Combination Mixer & Compressor; Locomotive Engineer; Mixermobile; Mucking Machine; Posthole Auger or Punch; Pump (grout or jet); Soil Stabilizer (P & H or similar); Spreader Machine; Dozer/Tractor (up to D-6 or equivalent) and Traxcavator; Traverse Finish Machine; Turnhead Operator

INFORMATIONAL COPY ONLY - NOT FOR BIDDING

GROUP 4: Concrete Pumps (squeeze-crete, flow-crete, pump-crete, Whitman & similar); Curb Extruder (asphalt or concrete); Drills (churn, core, calyx or diamond); Equipment Serviceman; Greaser & Oiler; Hoist (2 or more drums or Tower Hoist); Loaders (overhead & front-end, under 4 yds. R/T); Refrigeration Plant Engineer (under 1000 ton); Rubber-tired Skidders (R/T with or without attachments); Surface Heater & Plant Machine; Trenching Machines (under 7 ft. depth capacity); Turnhead (with re-screening); Vacuum Drill (reverse circulation drill under 8 inch bit)

GROUP 5: Backhoe (under 45,000 gw); Backhoe & Hoe Ram (under 3/4 yd.); Carrydeck & Boom Truck (under 25 tons); Cranes (25 tons & under), all attachments including clamshell, dragline; Derricks & Stifflegs (under 65 tons); Drilling Equipment(8 inch bit & over) (Robbins, reverse circulation & similar); Hoe Ram; Piledriving Engineers; Paving (dual drum); Railroad Track Liner Operaotr (self-propelled); Refrigeration Plant Engineer (1000 tons & over); Signalman (Whirleys, Highline Hammerheads or similar); Grade Checker

GROUP 6: Asphalt Plant Operator; Automatic Subgrader (Ditches & Trimmers)(Autograde, ABC, R.A. Hansen & similar on grade wire); Backhoe (45,000 gw and over to 110,000 gw); Backhoes & Hoe Ram (3/4 yd. to 3 yd.); Batch Plant (over 4 units); Batch & Wet Mix Operator (multiple units, 2 & incl. 4); Blade Operator (motor patrol & attachments); Cable Controller (dispatcher); Compactor (self-propelled with blade); Concrete Pump Boom Truck; Concrete Slip Form Paver; Cranes (over 25 tons, to and including 45 tons), all attachments including clamshell, dragline; Crusher, Grizzle & Screening Plant Operator; Dozer, 834 R/T & similar; Drill Doctor; Loader Operator (front-end & overhead, 4 yds. incl. 8 yds.); Multiple Dozer Units with single blade; Paving Machine (asphalt and concrete); Quad-Track or similar equipment; Rollerman (finishing asphalt pavement); Roto Mill (pavement grinder); Scrapers, all, rubber-tired; Screed Operator; Shovel(under 3 yds.); Trenching Machines (7 ft. depth & over); Tug Boat Operator Vactor guzzler, super sucker; Lime Batch Tank Operator (REcycle Train); Lime Brain Operator (Recycle Train); Mobile Crusher Operator (Recycle Train)

INFORMATIONAL COPY ONLY, NOT FOR BIDDING

GROUP 7: Backhoe (over 110,000 gw); Backhoes & Hoe Ram (3 yds & over); Blade (finish & bluetop) Automatic, CMI, ABC, Finish Athey & Huber & similar when used as automatic; Cableway Operators; Concrete Cleaning/Decontamination machine operator; Cranes (over 45 tons to but not including 85 tons), all attachments including clamshell and dragine; Derricks & Stiffleys (65 tons & over); Elevating Belt (Holland type); Heavy equipment robotics operator; Loader (360 degrees revolving Koehring Scooper or similar); Loaders (overhead & front-end, over 8 yds. to 10 yds.); Rubber-tired Scrapers (multiple engine with three or more scrapers); Shovels (3 yds. & over); Whirleys & Hammerheads, ALL; H.D. Mechanic; H.D. Welder; Hydraulic Platform Trailers (Goldhofer, Shaurerly andSimilar); Ultra High Pressure Wateriet Cutting Tool System Operator (30,000 psi); Vacuum Blasting Machine Operator

GROUP 8: Cranes (85 tons and over, and all climbing, overhead,rail and tower), all attachments including clamshell, dragline; Loaders (overhead and front-end, 10 yards and over); Helicopter Pilot

BOOM PAY: (All Cranes, Including Tower)
180 ft to 250 ft $ .50 over scale
Over 250 ft $ .80 over scale

NOTE:
In computing the length of the boom on Tower Cranes, they shall be measured from the base of the Tower to the point of the boom.

HAZMAT:
Anyone working on HAZMAT jobs, working with supplied air shall receive $1.00 an hour above classification.

ENGI0612-001 09/28/2018

PIERCE County

ON PROJECTS DESCRIBED IN FOOTNOTE A BELOW, THE RATE FOR EACH GROUP SHALL BE 90% OF THE BASE RATE PLUS FULL FRINGE BENEFITS. ON ALL OTHER WORK, THE FOLLOWING RATES APPLY.

Zone 1 (0-25 radius miles):

	Rates	Fringes
POWER EQUIPMENT OPERATOR		
GROUP 1A	$ 44.44	19.97
GROUP 1AA	$ 45.09	19.97
GROUP 1AAA	$ 45.73	19.97
GROUP 1	$ 43.79	19.97
GROUP 2	$ 43.23	19.97
GROUP 3	$ 42.74	19.97
GROUP 4	$ 40.01	19.97

INFORMATIONAL COPY ONLY- NOT FOR BIDDING

Zone Differential (Add to Zone 1 rates):
Zone 2 (26-45 radius miles) = $1.00
Zone 3 (Over 45 radius miles) - $1.30

BASEPOINTS: CENTRALIA, OLYMPIA, TACOMA

POWER EQUIPMENT OPERATORS CLASSIFICATIONS

GROUP 1 AAA - Cranes-over 300 tons or 300 ft of boom (including jib with attachments)

GROUP 1AA - Cranes- 200 tonsto 300 tons, or 250 ft of boom (including jib with attachments; Tower crane over 175 ft in height, bas to boom

GROUP 1A - Cranes, 100 tons thru 199 tons, or 150 ft of boom (including jib with attachments); Crane-overhead, bridge type, 100 tons and over; Tower crane up to 175 ft in height base to boom; Loaders-overhead, 8 yards and over; Shovels, excavator, backhoes-6 yards and over with attachments

GROUP 1 - Cableway; Cranes 45 tons thru 99 tons under 150 ft of boom (including jib with attachments); Crane-overhead, bridge type, 45 tons thru 99 tons; Derricks on building work; Excavator, shovel, backhoes over 3 yards and under 6 yards; Hard tail end dump articulating off-road equipment 45 yards and over; Loader- overhead, 6 yards to, but not including, 8 yards; Mucking machine, mole, tunnel, drill and/or shield; Quad 9 HD 41, D-10; Remote control operator on rubber tired earth moving equipment; Rollagon; Scrapers-self-propelled 45 yards and over; Slipform pavers; Transporters, all track or truck type

GROUP 2 - Barrier machine (zipper); Batch Plant Operator-concrete; Bump Cutter; Cranes, 20 tons thru 44 tons with attachments; Crane-Overhead, bridge type, 20 tons through 44 tons; Chipper; Concrete pump-truck mount with boom attachment; Crusher; Deck engineer/deck winches (power); Drilling machine; Excavator, shovel, backhoe-3 yards and under; Finishing machine, Bidwell, Gamaco and similar equipment; Guardrail punch; Loaders, overhead under 6 yards; Loaders-plant feed; Locomotives-all; Mechanics- all; Mixers, asphalt plant; Motor patrol graders, finishing; Piledriver (other than crane mount); Roto-mill, roto-grinder; Screedman, spreader, topside operator-Blaw Knox, Cedar Rapids, Jaeger, Caterpillar, Barbar Green; Scraper-self- propelled, hard tail end dump, articulating off-road equipment- under 45 yards; Subgrader trimmer; Tractors, backhoe over 75 hp; Transfer material service machine-shuttle buggy, Blaw Knox- Roadtec; Truck Crane oiler/driver-100 tons and over; Truck Mount Portable Conveyor; Yo Yo pay

INFORMATIONAL COPY ONLY-NOT FOR BIDDING

GROUP 3 - Conveyors; Cranes through 19 tons with attachments; Crane-A-frame over 10 tons; Drill oilers-auger type, truck or crane mount; Dozer-D-9 and under; Forklift-3000 lbs. and over with attachments; Horizontal/directional drill locator; Outside Hoists-(elevators and manlifts), air tuggers, strato tower bucket elevators; Hydralifts/boom trucks over 10 tons; Loaders-elevating type, belt; Motor patrol grader-nonfinishing; Plant oiler- asphalt, crusher; Pump-Concrete; Roller, plant mix or multi-lfit materials; Saws-concrete; Scrapers, concrete and carry all; Service engineers-equipment; Trenching machines; Truck crane oiler/driver under 100 tons; Tractors, backhoe under 75 hp

GROUP 4 - Assistant Engineer; Bobcat; Brooms; Compressor; Concrete Finish Machine-laser screed; Cranes A-frame 10 tons and under; Elevator and manlift (permanent and shaft type); Forklifts-under 3000 lbs. with attachments; Gradechecker, stakehop; Hydralifts/boom trucks, 10 tons and under; Oil distributors, blower distribution and mulch seeding operator; Pavement breaker; Posthole digger-mechanical; Power plant; Pumps-water; Rigger and Bellman; Roller-other than plant mix; Wheel Tractors, farmall type; Shotcrete/gunite equipment operator

FOOTNOTE A- Reduced rates may be paid on the following:

1. Projects involving work on structures such as buildings and bridges whose total value is less than $1.5 million excluding mechanical, electrical, and utility portions of the contract.

2. Projects of less than $1 million where no building is involved. Surfacing and paving included, but utilities excluded.

3. Marine projects (docks, wharfs, etc.) less than $150,000.

HANDLING OF HAZARDOUS WASTE MATERIALS: Personnel in all craft classifications subject to working inside a federally designated hazardous perimeter shall be elgible for compensation in accordance with the following group schedule relative to the level of hazardous waste as outlined in the specific hazardous waste project site safety plan.

H-1 Base wage rate when on a hazardous waste site when not outfitted with protective clothing, Class "D" Suit - Base wage rate plus $ .50 per hour.
H-2 Class "C" Suit - Base wage rate plus $1.00 per hour.
H-3 Class "B" Suit - Base wage rate plus $1.50 per hour.
H-4 Class "A" Suit - Base wage rate plus $2.00 per hour.

INFORMATIONAL COPY ONLY - NOT FOR BIDDING

ENGI0612-012 09/28/2018

LEWIS, PACIFIC (portion lying north of a parallel line extending west from the northern boundary of Wahkaikum County to the sea) AND THURSTON COUNTIES

ON PROJECTS DESCRIBED IN FOOTNOTE A BELOW, THE RATE FOR EACH GROUP SHALL BE 90% OF THE BASE RATE PLUS FULL FRINGE BENEFITS. ON ALL OTHER WORK, THE FOLLOWING RATES APPLY.

Zone 1 (0-25 radius miles):

	Rates	Fringes
POWER EQUIPMENT OPERATOR		
GROUP 1A	$ 44.44	19.97
GROUP 1AA	$ 45.09	19.97
GROUP 1AAA	$ 45.73	19.97
GROUP 1	$ 43.79	19.97
GROUP 2	$ 43.23	19.97
GROUP 3	$ 42.74	19.97
GROUP 4	$ 40.01	19.97

Zone Differential (Add to Zone 1 rates):
Zone 2 (26-45 radius miles) = $1.00
Zone 3 (Over 45 radius miles) - $1.30

BASEPOINTS: CENTRALIA, OLYMPIA, TACOMA

POWER EQUIPMENT OPERATORS CLASSIFICATIONS

GROUP 1 AAA - Cranes-over 300 tons or 300 ft of boom (including jib with attachments)

GROUP 1AA - Cranes- 200 tonsto 300 tons, or 250 ft of boom (including jib with attachments; Tower crane over 175 ft in height, bas to boom

GROUP 1A - Cranes- 100 tons thru 199 tons, or 150 ft of boom (including jib with attachments); Crane-overhead, bridge type, 100 tons and over; Tower crane up to 175 ft in height base to boom; Loaders-overhead, 8 yards and over; Shovels, excavators, backhoes-6 yards and over with attachments

GROUP 1 - Cableway; Cranes 45 tons thru 99 tons under 150 ft of boom (including jib with attachments); Crane-overhead, bridge type, 45 tons thru 99 tons; Derricks on building work; Excavator, shovel, backhoes over 3 yards and under 6 yards; Hard tail end dump articulating off-road equipment 45 yards and over; Loader- overhead, 6 yards to, but not including, 8 yards; Mucking machine, mole, tunnel, drill and/or shield; Quad 9 HD 41, D-10; Remote control operator on rubber tired earth moving equipment; Rollagon; Scrapers-self-propelled 45 yards and over; Slipform pavers; Transporters, all track or truck type

INFORMATIONAL COPY ONLY- NOT FOR BIDDING

GROUP 2 - Barrier machine (zipper); Batch Plant Operator-concrete; Bump Cutter; Cranes, 20 tons thru 44 tons with attachments; Crane-Overhead, bridge type, 20 tons through 44 tons; Chipper; Concrete pump-truck mount with boom attachment; Crusher; Deck engineer/deck winches (power); Drilling machine; Excavator, shovel, backhoe-3 yards and under; Finishing machine, Bidwell, Gamaco and similar equipment; Guardrail punch; Loaders, overhead under 6 yards; Loaders-plant feed; Locomotives-all; Mechanics- all; Mixers, asphalt plant; Motor patrol graders, finishing; Piledriver (other than crane mount); Roto-mill, roto-grinder; Screedman, spreader, topside operator-Blaw Knox, Cedar Rapids, Jaeger, Caterpillar, Barbar Green; Scraper-self- propelled, hard tail end dump, articulating off-road equipment- under 45 yards; Subgrader trimmer; Tractors, backhoe over 75 hp; Transfer material service machine-shuttle buggy, Blaw Knox- Roadtec; Truck Crane oiler/driver-100 tons and over; Truck Mount Portable Conveyor; Yo Yo pay

GROUP 3 - Conveyors; Cranes through 19 tons with attachments; Crane-A-frame over 10 tons; Drill oilers-auger type, truck or crane mount; Dozer-D-9 and under; Forklift-3000 lbs. and over with attachments; Horizontal/directional drill locator; Outside Hoists-(elevators and manlifts), air tuggers, strato tower bucket elevators; Hydralifts/boom trucks over 10 tons; Loaders-elevating type, belt; Motor patrol grader-nonfinishing; Plant oiler- asphalt, crusher; Pump-Concrete; Roller, plant mix or multi-lfit materials; Saws-concrete; Scrapers, concrete and carry all; Service engineers-equipment; Trenching machines; Truck crane oiler/driver under 100 tons; Tractors, backhoe under 75 hp

GROUP 4 - Assistant Engineer, Bobcat; Brooms; Compressor; Concrete Finish Machine-laser screed; Cranes A-frame 10 tons and under; Elevator and manlift (permanent and shaft type); Forklifts-under 3000 lbs. with attachments; Gradechecker, stakehop; Hydralifts/boom trucks, 10 tons and under; Oil distributors, blower distribution and mulch seeding operator; Pavement breaker; Posthole digger-mechanical; Power plant; Pumps-water; Rigger and Bellman; Roller-other than plant mix; Wheel Tractors, farmall type; Shotcrete/gunite equipment operator

FOOTNOTE A- Reduced rates may be paid on the following:

1. Projects involving work on structures such as buildings and bridges whose total value is less than $1.5 million excluding mechanical, electrical, and utility portions of the contract.

2. Projects of less than $1 million where no building is involved. Surfacing and paving included, but utilities excluded.

3. Marine projects (docks, wharfs, etc.) less than $150,000.

INFORMATIONAL COPY ONLY-NOT FOR BIDDING

HANDLING OF HAZARDOUS WASTE MATERIALS: Personnel in all craft classifications subject to working inside a federally designated hazardous perimeter shall be elgible for compensation in accordance with the following group schedule relative to the level of hazardous waste as outlined in the specific hazardous waste project site safety plan.

H-1 Base wage rate when on a hazardous waste site when not outfitted with protective clothing, Class "D" Suit - Base wage rate plus $ .50 per hour.
H-2 Class "C" Suit - Base wage rate plus $1.00 per hour.
H-3 Class "B" Suit - Base wage rate plus $1.50 per hour.
H-4 Class "A" Suit - Base wage rate plus $2.00 per hour.

ENGI0701-002 01/01/2018

CLARK, COWLITZ, KLICKKITAT, PACIFIC (SOUTH), SKAMANIA, AND WAHKIAKUM COUNTIES

POWER RQUIPMENT OPERATORS: ZONE 1

	Rates	Fringes
POWER EQUIPMENT OPERATOR		
GROUP 1	$ 41.65	14.35
GROUP 1A	$ 43.73	14.35
GROUP 1B	$ 45.82	14.35
GROUP 2	$ 39.74	14.35
GROUP 3	$ 38.59	14.35
GROUP 4	$ 37.51	14.35
GROUP 5	$ 36.27	14.35
GROUP 6	$ 33.05	14.35

Zone Differential (add to Zone 1 rates):
Zone 2 - $3.00
Zone 3 - $6.00

For the following metropolitan counties: MULTNOMAH; CLACKAMAS; MARION; WASHINGTON; YAMHILL; AND COLUMBIA; CLARK; AND COWLITZ COUNTY, WASHINGTON WITH MODIFICATIONS AS INDICATED.

All jobs or projects located in Multnomah, Clackamas and Marion Counties, West of the western boundary of Mt. Hood National Forest and West of Mile Post 30 on Interstate 84 and West of Mile Post 30 on State Highway 26 and West of Mile Post 30 on Highway 22 and all jobs or projects located in Yamhill County, Washington County and Columbia County and all jobs or porjects located in Clark & Cowlitz County, Washington except that portion of Cowlitz County in the Mt. St. Helens "Blast Zone" shall receive Zone I pay for all classifications.

INFORMATIONAL COPY ONLY - NOT FOR BIDDING

All jobs or projects located in the area outside the identified boundary above, but less than 50 miles from the Portland City Hall shall receive Zone II pay for all classifications.

All jobs or projects located more than 50 miles from the Portland City Hall, but outside the identified border above, shall receive Zone III pay for all classifications.

For the following cities: ALBANY; BEND; COOS BAY; EUGENE; GRANTS PASS; KLAMATH FALLS; MEDFORD; ROSEBURG

All jobs or projects located within 30 miles of the respective city hall of the above mentioned cities shall receive Zone I pay for all classifications.

All jobs or projects located more than 30 miles and less than 50 miles from the respective city hall of the above mentioned cities shall receive Zone II pay for all classifications.

All jobs or projects located more than 50 miles from the respective city hall of the above mentioned cities shall receive Zone III pay for all classifications.

POWER EQUIPMENT OPERATORS CLASSIFICATIONS

Group 1
Concrete Batch Plan and or Wet mix three (3) units or more; Crane, Floating one hundred and fifty (150) ton but less than two hundred and fifty (250) ton; Crane, two hundred (200) ton through two hundred ninety nine (299) ton with two hundred foot (200') boom or less (including jib, inserts and/or attachments); Crane, ninety (90) ton through one hundred ninety nine (199) ton with over two hundred (200') boom Including jib, inserts and/or attachments); Crane, Tower Crane with one hundred seventy five foot (175') tower or less and with less than two hundred foot (200') jib; Crane, Whirley ninety (90) ton and over; Helicopter when used in erecting work

Group 1A
Crane, floating two hundred fifty (250) ton and over; Crane, two hundred (200) ton through two hundred ninety nine (299) ton, with over two hundred foot (200') boom (including jib, inserts and/or attachments); Crane, three hundred (300) ton through three hundred ninety nine (399) ton; Crane, Tower Crane with over one hundred seventy five foot (175') tower or over two hundred foot (200') jib; Crane, tower Crane on rail system or 2nd tower or more in work radius

INFORMATIONAL COPY ONLY- NOT FOR BIDDING

Group 1B

Crane, three hundred (300) ton through three hundred ninety nine (399) ton, with over two hundred foot (200') boom (including jib, inserts and/or attachments); Floating crane, three hundred fifty (350) ton and over; Crane, four hundred (400) ton and over

Group 2

Asphalt Plant (any type); Asphalt Roto-Mill, pavement profiler eight foot (8') lateral cut and over; Auto Grader or "Trimmer"; Blade, Robotic; Bulldozer, Robotic Equipment (any type); Bulldozer, over one hundred twenty thousand (120,000) lbs. and above; Concrete Batch Plant and/or Wet Mix one (1) and two (2) drum; Concrete Diamond Head Profiler; Canal Trimmer; Concrete, Automatic Slip Form Paver (Assistant to the Operator required); Crane, Boom Truck fifty (50) ton and with over one hundred fifty foot (150') boom and over; Crane, Floating (derrick barge) thirty (30) ton but less than one hundred fifty (150) ton; Crane, Cableway twenty-five (25) ton and over; Crane, Floating Clamshell three (3) cu. Yds. And over; Crane, ninety (90) ton through one hundred ninety nine (199) ton up to and including two hundred foot (200') of boom (including jib inserts and/or attachments); Crane, fifty (50) ton through eighty nine (89) ton with over one hundred fifty foot (150') boom (including jib inserts and/or attachments); Crane, Whirley under ninety (90) ton; Crusher Plant; Excavator over one hundred thirty thousand (130,000) lbs.; Loader one hundred twenty thousand (120,000) lbs. and above; Remote Controlled Earth Moving Equipment; Shovel, Dragline, Clamshell, five (5) cu. Yds. And over; Underwater Equipment remote or otherwise, when used in construction work; Wheel Excavator any size

Group 3

Bulldozer, over seventy thousand (70,000) lbs. up to and including one hundred twenty thousand (120,000) lbs.; Crane, Boom Truck fifty (50) ton and over with less than one hundred fifty foot (150') boom; Crane, fifty (50) ton through eighty nine (89) ton with one hundred fifty foot (150') boom or less (including jib inserts and/or attachments); Crane, Shovel, Dragline or Clamshell three (3) cu. Yds. but less than five (5) cu. Yds.; Excavator over eighty thousand (80,000) lbs. through one hundred thirty thousand (130,000) lbs.; Loader sixty thousand (60,000) lbs. and less than one hundred twenty thousand (120,000) lbs.

INFORMATIONAL COPY ONLY - NOT FOR BIDDING

Group 4

Asphalt, Screed; Asphalt Paver; Asphalt Roto-Mill, pavement profiler, under eight foot (8') lateral cut; Asphalt, Material Transfer Vehicle Operator; Back Filling Machine; Backhoe, Robotic, track and wheel type up to and including twenty thousand (20,000) lbs. with any attachments; Blade (any type); Boatman; Boring Machine; Bulldozer over twenty thousand (20,000) lbs. and more than one hundred (100) horse up to seventy thousand (70,000) lbs.; Cable-Plow (any type); Cableway up to twenty five (25) ton; Cat Drill (John Henry); Chippers; Compactor, multi-engine; Compactor, Robotic; Compactor with blade self-propelled; Concrete, Breaker; Concrete, Grout Plant; Concrete, Mixer Mobile; Concrete, Paving Road Mixer; Concrete, Reinforced Tank Banding Machine; Crane, Boom Truck twenty (20) ton and under fifty (50) ton; Crane, Bridge Locomotive, Gantry and Overhead; Crane, Carry Deck; Crane, Chicago Boom and similar types; Crane, Derrick Operator, under one hundred (100) ton; Crane, Floating Clamshell, Dragline, etc. Operator, under three (3) cu. yds. Or less than thirty (30) ton; Crane, under fifty (50) ton; Crane, Quick Tower under one hundred foot (100') in height and less than one hundred fifty foot (150') jib (on rail included); Diesel-Electric Engineer (Plant or Floating); Directional Drill over twenty thousand (20,000) lbs. pullback; Drill Cat Operator; Drill Doctor and/or Bit Grinder; Driller, Percussion, Diamond, Core, Cable, Rotary and similar type; Excavator Operator over twenty thousand (20,000) lbs. through eighty thousand (80,000) lbs.; Generator Operator; Grade-all; Guardrail Machines, i.e. punch, auger, etc.; Hammer Operator (Piledriver); Hoist, stiff leg, guy derrick or similar type, fifty (50) ton and over; Hoist, two (2) drums or more; Hydro Axe (loader mounted or similar type); Jack Operator, Elevating Barges; Barge Operator, self-unloading; Loader Operator, front end and overhead, twenty five thousand (25,000) lbs. and less than sixty thousand (60,000) lbs.; Log Skidders; Piledriver Operator (not crane type); Pipe, Bending, Cleaning, Doping and Wrapping Machines; Rail, Ballast Tamper Multi-Purpose; Rubber-tired Dozers and Pushers; Scraper, all types; Side-Boom; Skip Loader, Drag Box; Strump Grinder (loader mounted or similar type); Surface Heater and Planer; Tractor, rubber-tired, over fifty (50) HP Flywheel; Trenching Machine three foot (3') depth and deeper; Tub Grinder (used for wood debris); Tunnel Boring Machine Mechanic; Tunnel, Mucking Machine; Ultra High Pressure Water Jet Cutting Tool System Operator; Vacuum Blasting Machine Operator; Water pulls, Water wagons

INFORMATIONAL COPY ONLY NOT FOR BIDDING

Group 5

Asphalt, Extrusion Machine; Asphalt, Roller (any asphalt mix); Asphalt, Roto-Mill pavement profiler ground man; Bulldozer, twenty thousand (20,000) lbs. or less, or one hundred (100) horse or less; Cement Pump; Chip Spreading Machine; Churn Drill and Earth Boring Machine; Compactor, self-propelled without blade; Compressor, (any power) one thousand two hundred fifty (1,250) cu. ft. and over, total capacity; Concrete, Batch Plant Quality control; Concrete, Combination Mixer and compressor operator, gunite work; Concrete, Curb Machine, Mechanical Berm, Curb and/or Curb and Gutter; Concrete, Finishing Machine; Concrete, Grouting Machine; Concrete, Internal Full Slab Vibrator Operator; Concrete, Joint Machine; Concrete, Mixer single drum, any capacity; Concrete, Paving Machine eight foot (8') or less; Concrete, Planer; Concrete, Pump; Concrete, Pump Truck; Concrete, Pumpcrete Operator (any type); Concrete, Slip Form Pumps, power driven hydraulic lifting device for concrete forms; Conveyored Material Hauler; Crane, Boom Truck under twenty (20) tons; Crane, Boom Type lifting device, five (5) ton capacity or less; Drill, Directional type less than twenty thousand (20,000) lbs. pullback; Fork Lift, over ten (10) ton or Robotic; Helicopter Hoist; Hoist Operator, single drum; Hydraulic Backhoe track type up to and including twenty thousand (20,000) lbs.; Hydraulic Backhoe wheel type (any make); Laser Screed; Loaders, rubber-tired type, less than twenty five thousand (25,000) lbs.; Pavement Grinder and/or Grooving Machine (riding type); Pipe, cast in place Pipe Laying Machine; Pulva-Mixer or similar types; Pump Operator, more than five (5) pumps (any size); Rail, Ballast Compactor, Regulator, or Tamper machines; Service Oiler (Greaser); Sweeper Self-Propelled; Tractor, Rubber-Tired, fifty (50) HP flywheel and under; Trenching Machine Operator, maximum digging capacity three foot (3') depth; Tunnel Locomotive, Dinkey; Tunnel, Power Jumbo setting slip forms, etc.

Group 6

Asphalt, Pugmill (any type); Asphalt, Raker; Asphalt, Truck Mounted Asphalt Spreader, with Screed; Auger Oiler; Boatman; Bobcat, skid steed (less than one (1) yard); Broom, self-propelled; Compressor Operator (any power) under 1,250 cu. ft. total capacity; Concrete Curing Machine (riding type); Concrete Saw; Conveyor Operator or Assistant; Crane, Tugger; Crusher Feederman; Crusher Oiler; Deckhand; Drill, Directional Locator; Fork Lift; Grade Checker; Guardrail Punch Oiler; Hydrographic Seeder Machine, straw, pulp or seed; Hydrostatic Pump Operator; Mixer Box (CTB, dry batch, etc.); Oiler; Plant Oiler; Pump (any power); Rail, Brakeman, Switchman, Motorman; Rail, Tamping Machine, mechanical, self-propelled; Rigger; Roller grading (not asphalt); Truck, Crane Oiler-Driver

---

INFORMATIONAL COPY ONLY - NOT FOR BIDDING

IRON0014-005 07/01/2018

ADAMS, ASOTIN, BENTON, COLUMBIA, DOUGLAS, FERRY, FRANKLIN, GARFIELD, GRANT, LINCOLN, OKANOGAN, PEND ORIELLE, SPOKANE, STEVENS, WALLA WALLA AND WHITMAN COUNTIES

	Rates	Fringes
IRONWORKER	$ 33.18	27.82

IRON0029-002 05/01/2018

CLARK, COWLITZ, KLICKITAT, PACIFIC, SKAMANIA, AND WAHKAIKUM COUNTIES

	Rates	Fringes
IRONWORKER	$ 37.00	27.87

IRON0086-002 07/01/2018

YAKIMA, KITTITAS AND CHELAN COUNTIES

	Rates	Fringes
IRONWORKER	$ 33.18	27.82

IRON0086-004 07/01/2018

CLALLAM, GRAYS HARBOR, ISLAND, JEFFERSON, KING, KITSAP, LEWIS, MASON, PIERCE, SKAGIT, SNOHOMISH, THURSTON, AND WHATCOM COUNTIES

	Rates	Fringes
IRONWORKER	$ 40.81	28.22

INFORMATIONAL COPY ONLY - NOT FOR BIDDING

LABO0238-004 06/01/2018

PASCO AREA: ADAMS, BENTON, COLUMBIA,DOUGLAS (East of 120th Meridian), FERRY, FRANKLIN, GRANT, OKANOGAN, WALLA WALLA

SPOKANE AREA: ASOTIN, GARFIELD, LINCOLN, PEND OREILLE, SPOKANE, STEVENS & WHITMAN COUNTIES

	Rates	Fringes
LABORER (PASCO)		
GROUP 1	$ 24.84	12.35
GROUP 2	$ 26.94	12.35
GROUP 3	$ 27.21	12.35
GROUP 4	$ 27.48	12.35
GROUP 5	$ 27.76	12.35
LABORER (SPOKANE)		
GROUP 1	$ 24.74	12.45
GROUP 2	$ 26.84	12.45
GROUP 3	$ 27.11	12.45
GROUP 4	$ 27.38	12.45
GROUP 5	$ 27.66	12.45

Zone Differential (Add to Zone 1 rate): $2.00

BASE POINTS: Spokane, Pasco, Lewiston

Zone 1: 0-45 radius miles from the main post office.
Zone 2: 45 radius miles and over from the main post office.

LABORERS CLASSIFICATIONS

GROUP 1: Flagman; Landscape Laborer; Scaleman; Traffic Control Maintenance Laborer (to include erection and maintenance of barricades, signs and relief of flagperson); Window Washer/Cleaner (detail cleanup, such as, but not limited to cleaning floors, ceilings, walls, windows, etc. prior to final acceptance by the owner)

GROUP 2: Asbestos Abatement Worker; Brush Hog Feeder; Carpenter Tender; Cement Handler; Clean-up Laborer; Concrete Crewman (to include stripping of forms, hand operating jacks on slip form construction, application of concrete curing compounds, pumpcrete machine, signaling, handling the nozzle of squeezcrete or similar machine,6 inches and smaller); Confined Space Attendant; Concrete Signalman; Crusher Feeder; Demolition (to include clean-up, burning, loading, wrecking and salvage of all material); Dumpman; Fence Erector; Firewatch; Form Cleaning Machine Feeder, Stacker; General Laborer; Grout Machine Header Tender; Guard Rail (to include guard rails, guide and reference posts, sign posts, and right-of-way markers); Hazardous Waste Worker, Level D (no respirator is used and skin protection is minimal); Miner, Class "A" (to include all bull gang, concrete crewman, dumpman and pumpcrete

INFORMATIONAL COPY ONLY - NOT FOR BIDDING

crewman, including distributing pipe, assembly & dismantle, and nipper); Nipper; Riprap Man; Sandblast Tailhoseman; Scaffold Erector (wood or steel); Stake Jumper; Structural Mover (to include separating foundation, preparation, cribbing, shoring, jacking and unloading of structures); Tailhoseman (water nozzle); Timber Bucker and Faller (by hand); Track Laborer (RR); Truck Loader; Well-Point Man; All Other Work Classifications Not Specially Listed Shall Be Classified As General Laborer

GROUP 3: Asphalt Roller, walking; Cement Finisher Tender; Concrete Saw, walking; Demolition Torch; Dope Pot Firemen, non-mechanical; Driller Tender (when required to move and position machine); Form Setter, Paving; Grade Checker using level; Hazardous Waste Worker, Level C (uses a chemical "splash suit" and air purifying respirator); Jackhammer Operator; Miner, Class "B" (to include brakeman, finisher, vibrator, form setter); Nozzleman (to include squeeze and flo-crete nozzle); Nozzleman, water, air or steam; Pavement Breaker (under 90 lbs.); Pipelayer, corrugated metal culvert; Pipelayer, multi- plate; Pot Tender; Power Buggy Operator; Power Tool Operator, gas, electric, pneumatic; Railroad Equipment, power driven, except dual mobile power spiker or puller; Railroad Power Spiker or Puller, dual mobile; Rodder and Spreader; Tamper (to include operation of Barco, Essex and similar tampers); Trencher, Shawnee; Tugger Operator; Wagon Drills; Water Pipe Liner; Wheelbarrow (power driven)

GROUP 4: Air and Hydraulic Track Drill; Aspahlt Raker;Brush Machine (to include horizontal construction joint cleanup brush machine, power propelled); Caisson Worker, free air; Chain Saw Operator and Faller; Concrete Stack (to include laborers when laborers working on free standing concrete stacks for smoke or fume control above 40 feet high); Gunite (to include operation of machine and nozzle); Hazardous Waste Worker, Level B (uses same respirator protection as Level A. A supplied air line is provided in conjunction with a chemical "splash suit"); High Scaler; Laser Beam Operator (to include grade checker and elevation control); Miner, Class C (to include miner, nozzleman for concrete, laser beam operator and rigger on tunnels); Monitor Operator (air track or similar mounting); Mortar Mixer; Nozzleman (to include jet blasting nozzleman, over 1,200 lbs., jet blast machine power propelled, sandblast nozzle); Pavement Breaker (90 lbs. and over); Pipelayer (to include working topman, caulker, collarman, jointer, mortarman, rigger, jacker, shorer, valve or meter installer); Pipewrapper; Plasterer Tender; Vibrators (all)

GROUP 5 - Drills with Dual Masts; Hazardous Waste Worker, Level A (utilizes a fully encapsulated suit with a self-contained breathing apparatus or a supplied air line); Miner Class "D", (to include raise and shaft miner, laser beam operator on riases and shafts)

INFORMATIONAL COPY ONLY, NOT FOR BIDDING

LABO0238-006 06/01/2018

COUNTIES EAST OF THE 120TH MERIDIAN: ADAMS, ASOTIN, BENTON, CHELAN, COLUMBIA, DOUGLAS, FERRY, FRANKLIN, GARFIELD, GRANT, LINCOLN, OKANOGAN, PEND OREILLE, STEVENS, SPOKANE, WALLA WALLA, WHITMAN

	Rates	Fringes
Hod Carrier	$ 27.75	12.25

LABO0242-003 06/01/2018

KING COUNTY

	Rates	Fringes
LABORER		
GROUP 1	$ 26.05	11.49
GROUP 2	$ 29.83	11.49
GROUP 3	$ 37.27	11.49
GROUP 4	$ 38.19	11.49
GROUP 5	$ 38.80	11.49

BASE POINTS: BELLINGHAM, MT. VERNON, EVERETT, SEATTLE, KENT, TACOMA, OLYMPIA, CENTRALIA, ABERDEEN, SHELTON, PT. TOWNSEND, PT. ANGELES, AND BREMERTON

ZONE 1 - Projects within 25 radius miles of the respective city hall
ZONE 2 - More than 25 but less than 45 radius miles from the respective city hall
ZONE 3 - More than 45 radius miles from the respective city hall

ZONE DIFFERENTIAL (ADD TO ZONE 1 RATES):
ZONE 2 - $1.00
ZONE 3 - $1.30

BASE POINTS: CHELAN, SUNNYSIDE, WENATCHEE, AND YAKIMA

ZONE 1 - Projects within 25 radius miles of the respective city hall
ZONE 2 - More than 25 radius miles from the respective city hall

ZONE DIFFERENTIAL (ADD TO ZONE 1 RATES):
ZONE 2 - $2.25

INFORMATIONAL COPY ONLY - NOT FOR BIDDING

LABORERS CLASSIFICATIONS

GROUP 1: Landscaping and Planting; Watchman; Window Washer/Cleaner (detail clean-up, such as but not limited to cleaning floors, ceilings, walls, windows, etc., prior to final acceptance by the owner)

GROUP 2: Batch Weighman; Crusher Feeder; Fence Laborer; Flagman; Pilot Car

GROUP 3: General Laborer; Air, Gas, or Electric Vibrating Screed; Asbestos Abatement Laborer; Ballast Regulator Machine; Brush Cutter; Brush Hog Feeder; Burner; Carpenter Tender; Cement Finisher Tender; Change House or Dry Shack; Chipping Gun (under 30 lbs.); Choker Setter; Chuck Tender; Clean-up Laborer; Concrete Form Stripper; Curing Laborer; Demolition (wrecking and moving including charred material); Ditch Digger; Dump Person; Fine Graders; Firewatch; Form Setter; Gabian Basket Builders; Grout Machine Tender; Grinders; Guardrail Erector; Hazardous Waste Worker (Level C: uses a chemical "splash suit" and air purifying respirator); Maintenance Person; Material Yard Person; Pot Tender; Rip Rap Person; Riggers; Scale Person; Sloper Sprayer; Signal Person; Stock Piler; Stake Hopper; Toolroom Man (at job site); Topper-Tailer; Track Laborer; Truck Spotter; Vinyl Seamer

GROUP 4: Cement Dumper-Paving; Chipping Gun (over 30 lbs.); Clary Power Spreader; Concrete Dumper/Chute Operator; Concrete Saw Operator; Drill Operator (hydraulic, diamond, aiartrac); Faller and Bucker Chain Saw; Grade Checker and Transit Person; Groutmen (pressure) including post tension beams; Hazardous Waste Worker (Level B: uses same respirator protection as Level A. A supplied air line is provided in conjunction with a chemical "splash suit"); High Scaler; Jackhammer; Laserbeam Operator; Manhole Builder-Mudman; Nozzleman (concrete pump, green cutter when using combination of high pressure air and water on concrete and rock, sandblast, gunite, shotcrete, water blaster, vacuum blaster); Pavement Breaker; Pipe Layer and Caulker; Pipe Pot Tender; Pipe Reliner (not insert type); Pipe Wrapper; Power Jacks; Railroad Spike Puller-Power; Raker-Asphalt; Rivet Buster; Rodder; Sloper (over 20 ft); Spreader (concrete); Tamper and Similar electric, air and glas operated tool; Timber Person-sewer (lagger shorer and cribber); Track Liner Power; Tugger Operator; Vibrator; Well Point Laborer

GROUP 5: Caisson Worker; Miner; Mortarman and Hodcarrier; Powderman; Re-Timberman; Hazardous Waste Worker (Level A: utilizes a fully encapsulated suit with a self-contained breathing apparatus or a supplied air line).

INFORMATIONAL COPY ONLY NOT FOR BIDDING

LABO0252-010 06/01/2018

CLALLAM, GRAYS HARBOR, JEFFERSON, KITSAP, LEWIS, MASON, PACIFIC (EXCLUDING SOUTHWEST), PIERCE, AND THURSTON COUNTIES

	Rates	Fringes
LABORER		
GROUP 1	$ 26.05	11.49
GROUP 2	$ 29.83	11.49
GROUP 3	$ 37.27	11.49
GROUP 4	$ 38.19	11.49
GROUP 5	$ 38.80	11.49

BASE POINTS: BELLINGHAM, MT. VERNON, EVERETT, SEATTLE, KENT, TACOMA, OLYMPIA, CENTRALIA, ABERDEEN, SHELTON, PT. TOWNSEND, PT. ANGELES, AND BREMERTON

ZONE 1 - Projects within 25 radius miles of the respective city hall
ZONE 2 - More than 25 but less than 45 radius miles from the respective city hall
ZONE 3 - More than 45 radius miles from the respective city hall

ZONE DIFFERENTIAL (ADD TO ZONE 1 RATES):
ZONE 2 - $1.00
ZONE 3 - $1.30

BASE POINTS: CHELAN, SUNNYSIDE, WENATCHEE, AND YAKIMA

ZONE 1 - Projects within 25 radius miles of the respective city hall
ZONE 2 - More than 25 radius miles from the respective city hall

ZONE DIFFERENTIAL (ADD TO ZONE 1 RATES):
ZONE 2 - $2.25

LABORERS CLASSIFICATIONS

GROUP 1: Landscaping and Planting; Watchman; Window Washer/Cleaner (detail clean-up, such as but not limited to cleaning floors, ceilings, walls, windows, etc., prior to final acceptance by the owner)

GROUP 2: Batch Weighman; Crusher Feeder; Fence Laborer; Flagman; Pilot Car

INFORMATIONAL COPY ONLY-NOT FOR BIDDING

GROUP 3: General Laborer; Air, Gas, or Electric Vibrating Screed; Asbestos Abatement Laborer; Ballast Regulator Machine; Brush Cutter; Brush Hog Feeder; Burner; Carpenter Tender; Cement Finisher Tender; Change House or Dry Shack; Chipping Gun (under 30 lbs.); Choker Setter; Chuck Tender; Clean-up Laborer; Concrete Form Stripper; Curing Laborer; Demolition (wrecking and moving including charred material); Ditch Digger; Dump Person; Fine Graders; Firewatch; Form Setter; Gabian Basket Builders; Grout Machine Tender; Grinders; Guardrail Erector; Hazardous Waste Worker (Level C: uses a chemical "splash suit" and air purifying respirator); Maintenance Person; Material Yard Person; Pot Tender; Rip Rap Person; Riggers; Scale Person; Sloper Sprayer; Signal Person; Stock Piler; Stake Hopper; Toolroom Man (at job site); Topper-Tailer; Track Laborer; Truck Spotter; Vinyl Seamer

GROUP 4: Cement Dumper-Paving; Chipping Gun (over 30 lbs.); Clary Power Spreader; Concrete Dumper/Chute Operator; Concrete Saw Operator; Drill Operator (hydraulic, diamond, aiartrac); Faller and Bucker Chain Saw; Grade Checker and Transit Person; Groutmen (pressure) including post tension beams; Hazardous Waste Worker (Level B: uses same respirator protection as Level A. A supplied air line is provided in conjunction with a chemical "splash suit"); High Scaler; Jackhammer; Laserbeam Operator; Manhole Builder-Mudman; Nozzleman (concrete pump, green cutter when using combination of high pressure air and water on concrete and rock, sandblast, gunite, shotcrete, water blaster, vacuum blaster); Pavement Breaker; Pipe Layer and Caulker; Pipe Pot Tender; Pipe Reliner (not insert type); Pipe Wrapper; Power Jacks; Railroad Spike Puller-Power; Raker-Asphalt; Rivet Buster, Rodder; Sloper (over 20 ft); Spreader (concrete); Tamper and Similar electric, air and glas operated tool; Timber Person-sewer (lagger shorer and cribber); Track Liner Power; Tugger Operator; Vibrator; Well Point Laborer

GROUP 5: Caisson Worker; Miner; Mortarman and Hodcarrier; Powderman; Re-Timberman; Hazardous Waste Worker (Level A: utilizes a fully encapsulated suit with a self-contained breathing apparatus or a supplied air line).

INFORMATIONAL COPY ONLY - NOT FOR BIDDING

LABO0292-008 06/01/2018

ISLAND, SAN JUAN, SKAGIT, SNOHOMISH, AND WHATCOM COUNTIES

	Rates	Fringes
LABORER		
GROUP 1	$ 26.05	11.49
GROUP 2	$ 29.83	11.49
GROUP 3	$ 37.27	11.49
GROUP 4	$ 38.19	11.49
GROUP 5	$ 38.80	11.49

BASE POINTS: BELLINGHAM, MT. VERNON, EVERETT, SEATTLE, KENT, TACOMA, OLYMPIA, CENTRALIA, ABERDEEN, SHELTON, PT. TOWNSEND, PT. ANGELES, AND BREMERTON

ZONE 1 - Projects within 25 radius miles of the respective city hall
ZONE 2 - More than 25 but less than 45 radius miles from the respective city hall
ZONE 3 - More than 45 radius miles from the respective city hall

ZONE DIFFERENTIAL (ADD TO ZONE 1 RATES):
ZONE 2 - $1.00
ZONE 3 - $1.30

BASE POINTS: CHELAN, SUNNYSIDE, WENATCHEE, AND YAKIMA

ZONE 1 - Projects within 25 radius miles of the respective city hall
ZONE 2 - More than 25 radius miles from the respective city hall

ZONE DIFFERENTIAL (ADD TO ZONE 1 RATES):
ZONE 2 - $2.25

LABORERS CLASSIFICATIONS

GROUP 1: Landscaping and Planting; Watchman; Window Washer/Cleaner (detail clean-up, such as but not limited to cleaning floors, ceilings, walls, windows, etc., prior to final acceptance by the owner)

GROUP 2: Batch Weighman; Crusher Feeder; Fence Laborer; Flagman; Pilot Car

INFORMATIONAL COPY ONLY - NOT FOR BIDDING

GROUP 3: General Laborer; Air, Gas, or Electric Vibrating Screed; Asbestos Abatement Laborer; Ballast Regulator Machine; Brush Cutter; Brush Hog Feeder; Burner; Carpenter Tender; Cement Finisher Tender; Change House or Dry Shack; Chipping Gun (under 30 lbs.); Choker Setter; Chuck Tender; Clean-up Laborer; Concrete Form Stripper; Curing Laborer; Demolition (wrecking and moving including charred material); Ditch Digger; Dump Person; Fine Graders; Firewatch; Form Setter; Gabian Basket Builders; Grout Machine Tender; Grinders; Guardrail Erector; Hazardous Waste Worker (Level C: uses a chemical "splash suit" and air purifying respirator); Maintenance Person; Material Yard Person; Pot Tender; Rip Rap Person; Riggers; Scale Person; Sloper Sprayer; Signal Person; Stock Piler; Stake Hopper; Toolroom Man (at job site); Topper-Tailer; Track Laborer; Truck Spotter; Vinyl Seamer

GROUP 4: Cement Dumper-Paving; Chipping Gun (over 30 lbs.) Clary Power Spreader; Concrete Dumper/Chute Operator; Concrete Saw Operator; Drill Operator (hydraulic, diamond, aiartrac); Faller and Bucker Chain Saw; Grade Checker and Transit Person; Groutmen (pressure) including post tension beams; Hazardous Waste Worker (Level B: uses same respirator protection as Level A. A supplied air line is provided in conjunction with a chemical "splash suit"); High Scaler; Jackhammer; Laserbeam Operator; Manhole Builder-Mudman; Nozzleman (concrete pump, green cutter when using combination of high pressure air and water on concrete and rock, sandblast, gunite, shotcrete, water blaster, vacuum blaster); Pavement Breaker; Pipe Layer and Caulker; Pipe Pot Tender; Pipe Reliner (not insert type); Pipe Wrapper; Power Jacks; Railroad Spike Puller-Power; Raker-Asphalt; Rivet Buster; Rodder; Sloper (over 20 ft); Spreader (concrete); Tamper and Similar electric, air and glas operated tool; Timber Person-sewer (lagger shorer and cribber); Track Liner Power; Tugger Operator; Vibrator; Well Point Laborer

GROUP 5: Caisson Worker; Miner; Mortarman and Hodcarrier; Powderman; Re-Timberman; Hazardous Waste Worker (Level A: utilizes a fully encapsulated suit with a self-contained breathing apparatus or a supplied air line).

INFORMATIONAL COPY ONLY - NOT FOR BIDDING

LABO0335-001 06/01/2018

CLARK, COWLITZ, KLICKITAT, PACIFIC (SOUTH OF A STRAIGHT LINE MADE BY EXTENDING THE NORTH BOUNDARY LINE OF WAHKIAKUM COUNTY WEST TO THE PACIFIC OCEAN), SKAMANIA AND WAHKIAKUM COUNTIES

	Rates	Fringes
Laborers:		
ZONE 1:		
GROUP 1	$ 31.72	11.49
GROUP 2	$ 32.38	11.49
GROUP 3	$ 32.87	11.49
GROUP 4	$ 33.29	11.49
GROUP 5	$ 28.98	11.49
GROUP 6	$ 26.31	11.49
GROUP 7	$ 22.78	11.49

Zone Differential (Add to Zone 1 rates):
Zone 2 $ 0.65
Zone 3 - 1.15
Zone 4 - 1.70
Zone 5 - 2.75

BASE POINTS: LONGVIEW AND VANCOUVER

ZONE 1: Projects within 30 miles of the respective city all.
ZONE 2: More than 30 miles but less than 40 miles from the respective city hall.
ZONE 3: More than 40 miles but less than 50 miles from the respective city hall.
ZONE 4: More than 50 miles but less than 80 miles from the respective city hall.
ZONE 5: More than 80 miles from the respective city hall.

LABORERS CLASSIFICATIONS

GROUP 1: Asphalt Plant Laborers; Asphalt Spreaders; Batch Weighman; Brooms; Brush Burners and Cutters; Car and Truck Loaders; Carpenter Tender; Change-House Man or Dry Shack Man; Choker Setter; Clean-up Laborers; Curing, Concrete; Demolition, Wrecking and Moving Laborers; Dumpers, road oiling crew; Dumpmen (for grading crew); Elevator Feeders; Median Rail Reference Post, Guide Post, Right of Way Marker; Fine Graders; Fire Watch; Form Strippers (not swinging stages); General Laborers; Hazardous Waste Worker; Leverman or Aggregate Spreader (Flaherty and similar types); Loading Spotters; Material Yard Man (including electrical); Pittsburgh Chipper Operator or Similar Types; Railroad Track Laborers; Ribbon Setters (including steel forms); Rip Rap Man (hand placed); Road Pump Tender; Sewer Labor; Signalman; Skipman; Slopers; Spraymen; Stake Chaser; Stockpiler; Tie Back Shoring; Timber Faller and Bucker (hand labor); Toolroom Man (at job site); Tunnel Bullgang (above ground); Weight-Man- Crusher (aggregate when used)

INFORMATIONAL COPY ONLY- NOT FOR BIDDING

GROUP 2: Applicator (including pot power tender for same), applying protective material by hand or nozzle on utility lines or storage tanks on project; Brush Cutters (power saw); Burners; Choker Splicer; Clary Power Spreader and similar types; Clean- up Nozzleman-Green Cutter (concrete, rock, etc.); Concrete Power Buggyman; Concrete Laborer; Crusher Feeder; Demolition and Wrecking Charred Materials; Gunite Nozzleman Tender; Gunite or Sand Blasting Pot Tender; Handlers or Mixers of all Materials of an irritating nature (including cement and lime); Tool Operators (includes but not limited to: Dry Pack Machine; Jackhammer; Chipping Guns; Paving Breakers); Pipe Doping and Wrapping; Post Hole Digger, air, gas or electric; Vibrating Screed; Tampers; Sand Blasting (Wet); Stake-Setter; Tunnel-Muckers, Brakemen, Concrete Crew, Bullgang (underground)

GROUP 3: Asbestos Removal; Bit Grinder; Drill Doctor; Drill Operators, air tracks, cat drills, wagon drills, rubber-mounted drills, and other similar types including at crusher plants; Gunite Nozzleman; High Scalers, Strippers and Drillers (covers work in swinging stages, chairs or belts, under extreme conditions unusual to normal drilling, blasting, barring-down, or sloping and stripping); Manhole Builder; Powdermen; Concrete Saw Operator; Powdermen; Power Saw Operators (Bucking and Falling); Pumpcrete Nozzlemen; Sand Blasting (Dry); Sewer Timberman; Track Liners, Anchor Machines, Ballast Regulators, Multiple Tampers, Power Jacks, Tugger Operator; Tunnel-Chuck Tenders, Nippers and Timbermen; Vibrator; Water Blaster

GROUP 4: Asphalt Raker; Concrete Saw Operator (walls); Concrete Nozzelman; Grade Checker; Pipelayer; Laser Beam (pipelaying)-applicable when employee assigned to move, set up, align; Laser Beam; Tunnel Miners; Motorman-Dinky Locomotive-Tunnel; Powderman-Tunnel; Shield Operator-Tunnel

GROUP 5: Traffic Flaggers

GROUP 6: Fence Builders

GROUP 7: Landscaping or Planting Laborers

LABO0335-019 06/01/2018

	Rates	Fringes
Hod Carrier.....	$ 31.72	11.49

INFORMATIONAL COPY ONLY - NOT FOR BIDDING

LABO0348-003 06/01/2018

CHELAN, DOUGLAS (W OF 12TH MERIDIAN), KITTITAS, AND YAKIMA COUNTIES

	Rates	Fringes
LABORER		
GROUP 1	$ 22.23	11.49
GROUP 2	$ 25.48	11.49
GROUP 3	$ 27.89	11.49
GROUP 4	$ 28.56	11.49
GROUP 5	$ 29.04	11.49

BASE POINTS: BELLINGHAM, MT. VERNON, EVERETT, SEATTLE, KENT, TACOMA, OLYMPIA, CENTRALIA, ABERDEEN, SHELTON, PT. TOWNSEND, PT. ANGELES, AND BREMERTON

ZONE 1 - Projects within 25 radius miles of the respective city hall
ZONE 2 - More than 25 but less than 45 radius miles from the respective city hall
ZONE 3 - More than 45 radius miles from the respective city hall

ZONE DIFFERENTIAL (ADD TO ZONE 1 RATES):
ZONE 2 - $1.00
ZONE 3 - $1.30

BASE POINTS: CHELAN, SUNNYSIDE, WENATCHEE, AND YAKIMA

ZONE 1 - Projects within 25 radius miles of the respective city hall
ZONE 2 - More than 25 radius miles from the respective city hall

ZONE DIFFERENTIAL (ADD TO ZONE 1 RATES):
ZONE 2 - $2.25

LABORERS CLASSIFICATIONS

GROUP 1: Landscaping and Planting; Watchman; Window Washer/Cleaner (detail clean-up, such as but not limited to cleaning floors, ceilings, walls, windows, etc., prior to final acceptance by the owner)

GROUP 2: Batch Weighman; Crusher Feeder; Fence Laborer; Flagman; Pilot Car

INFORMATIONAL COPY ONLY-NOT FOR BIDDING

GROUP 3: General Laborer; Air, Gas, or Electric Vibrating Screed; Asbestos Abatement Laborer; Ballast Regulator Machine; Brush Cutter; Brush Hog Feeder; Burner; Carpenter Tender; Cement Finisher Tender; Change House or Dry Shack; Chipping Gun (under 30 lbs.); Choker Setter; Chuck Tender; Clean-up Laborer; Concrete Form Stripper; Curing Laborer; Demolition (wrecking and moving including charred material); Ditch Digger; Dump Person; Fine Graders; Firewatch; Form Setter; Gabian Basket Builders; Grout Machine Tender; Grinders; Guardrail Erector; Hazardous Waste Worker (Level C: uses a chemical "splash suit" and air purifying respirator); Maintenance Person; Material Yard Person; Pot Tender; Rip Rap Person; Riggers; Scale Person; Sloper Sprayer; Signal Person; Stock Piler; Stake Hopper; Toolroom Man (at job site); Topper-Tailer; Track Laborer; Truck Spotter; Vinyl Seamer

GROUP 4: Cement Dumper-Paving; Chipping Gun (over 30 lbs.); Clary Power Spreader; Concrete Dumper/Chute Operator; Concrete Saw Operator; Drill Operator (hydraulic, diamond, aiartrac); Faller and Bucker Chain Saw; Grade Checker and Transit Person; Groutmen (pressure) including post tension beams; Hazardous Waste Worker (Level B: uses same respirator protection as Level A. A supplied air line is provided in conjunction with a chemical "splash suit"); High Scaler; Jackhammer; Laserbeam Operator; Manhole Builder-Mudman; Nozzleman (concrete pump, green cutter when using combination of high pressure air and water on concrete and rock, sandblast, gunite, shotcrete, water blaster, vacuum blaster); Pavement Breaker; Pipe Layer and Caulker; Pipe Pot Tender; Pipe Reliner (not insert type); Pipe Wrapper; Power Jacks; Railroad Spike Puller-Power; Raker-Asphalt; Rivet Buster, Rodder; Sloper (over 20 ft); Spreader (concrete); Tamper and Similar electric, air and glas operated tool; Timber Person-sewer (lagger shorer and cribber); Track Liner Power; Tugger Operator; Vibrator; Well Point Laborer

GROUP 5: Caisson Worker; Miner; Mortarman and Hodcarrier; Powderman; Re-Timberman; Hazardous Waste Worker (Level A: utilizes a fully encapsulated suit with a self-contained breathing apparatus or a supplied air line).

INFORMATIONAL COPY ONLY - NOT FOR BIDDING

PAIN0005-002 07/01/2018

STATEWIDE EXCEPT CLARK, COWLITZ, KLICKITAT, PACIFIC (SOUTH), SKAMANIA, AND WAHKIAKUM COUNTIES

	Rates	Fringes
Painters:		
STRIPERS	$ 30.50	15.73

PAIN0005-004 03/01/2009

CLALLAM, GRAYS HARBOR, ISLAND, JEFFERSON, KING, KITSAP, LEWIS, MASON, PIERCE, SAN JUAN, SKAGIT, SNOHOMISH, THURSTON AND WHATCOM COUNTIES

	Rates	Fringes
PAINTER	$ 20.82	7.44

---

* PAIN0005-006 07/01/2018

ADAMS, ASOTIN; BENTON AND FRANKLIN (EXCEPT HANFORD SITE); CHELAN, COLUMBIA, DOUGLAS, FERRY, GARFIELD, GRANT, KITTITAS, LINCOLN, OKANOGAN, PEND OREILLE, SPOKANE, STEVENS, WALLA WALLA, WHITMAN AND YAKIMA COUNTIES

	Rates	Fringes
PAINTER		
Application of Cold Tar Products, Epoxies, Polyurethanes, Acids, Radiation Resistant Material, Water and Sandblasting	$ 30.19	11.71
Over 30'/Swing Stage Work	$ 22.20	7.98
Brush, Roller, Striping, Steam-cleaning and Spray	$ 22.94	11.61
Lead Abatement, Asbestos Abatement	$ 21.50	7.98

*$.70 shall be paid over and above the basic wage rates listed for work on swing stages and high work of over 30 feet

---

INFORMATIONAL COPY ONLY - NOT FOR BIDDING

PAIN0055-003 07/01/2018

CLARK, COWLITZ, KLICKITAT, PACIFIC, SKAMANIA, AND WAHKIAKUM COUNTIES

	Rates	Fringes
PAINTER		
Brush & Roller	$ 23.51	11.94
High work - All work 60 ft. or higher	$ 24.26	11.94
Spray and Sandblasting	$ 23.51	11.94

PAIN0055-006 07/01/2018

CLARK, COWLITZ, KLICKITAT, SKAMANIA and WAHKIAKUM COUNTIES

	Rates	Fringes
Painters:		
HIGHWAY & PARKING LOT STRIPER	$ 35.02	12.06

PLAS0072-004 06/01/2018

ADAMS, ASOTIN, BENTON, CHELAN, COLUMBIA, DOUGLAS, FERRY, FRANKLIN, GARFIELD, GRANT, KITTITAS, LINCOLN, OKANOGAN, PEND OREILLE, SPOKANE, STEVENS, WALLA WALLA, WHITMAN, AND YAKIMA COUNTIES

	Rates	Fringes
CEMENT MASON/CONCRETE FINISHER		
ZONE 1	$ 29.07	14.13

Zone Differential (Add to Zone 1 rate): Zone 2 - $2.00

BASE POINTS: Spokane, Pasco, Lewiston; Wenatchee
Zone 1: 0 - 45 radius miles from the main post office
Zone 2: Over 45 radius miles from the main post office

INFORMATIONAL COPY ONLY - NOT FOR BIDDING

PLAS0528-001 06/01/2018

CLALLAM, COWLITZ, GRAYS HARBOR, ISLAND, JEFFERSON, KING, KITSAP, LEWIS, MASON, PACIFIC, PIERCE, SAN JUAN, SKAGIT, SNOHOMISH, THURSTON, WAHKIAKUM AND WHATCOM COUNTIES

	Rates	Fringes
CEMENT MASON		
CEMENT MASON	$ 42.63	17.44
COMPOSITION, TROWEL MACHINE, GRINDER, POWER TOOLS, GUNNITE NOZZLE	$ 43.13	17.44
TROWLING MACHINE OPERATOR ON COMPOSITION	$ 43.13	17.44

PLAS0555-002 06/01/2017

CLARK, KLICKITAT AND SKAMANIA COUNTIES

ZONE 1:

	Rates	Fringes
CEMENT MASON		
CEMENT MASONS DOING BOTH COMPOSITION/POWER MACHINERY AND SUSPENDED/HANGING SCAFFOLD	$ 32.87	17.62
CEMENT MASONS ON SUSPENDED, SWINGING AND/OR HANGING SCAFFOLD	$ 32.87	17.62
CEMENT MASONS	$ 31.50	17.62
COMPOSITION WORKERS AND POWER MACHINERY OPERATORS	$ 32.19	17.62

Zone Differential (Add To Zone 1 Rates):
Zone 2 - $0.65
Zone 3 - 1.15
Zone 4 - 1.70
Zone 5 - 3.00

BASE POINTS: BEND, CORVALLIS, EUGENE, MEDFORD, PORTLAND, SALEM, THE DALLES, VANCOUVER

ZONE 1: Projects within 30 miles of the respective city hall
ZONE 2: More than 30 miles but less than 40 miles from the respective city hall.
ZONE 3: More than 40 miles but less than 50 miles from the respective city hall.
ZONE 4: More than 50 miles but less than 80 miles from the respective city hall.
ZONE 5: More than 80 miles from the respective city hall

INFORMATIONAL COPY ONLY - NOT FOR BIDDING

TEAM0037-002 06/01/2018

CLARK, COWLITZ, KLICKITAT, PACIFIC (South of a straight line made by extending the north boundary line of Wahkiakum County west to the Pacific Ocean), SKAMANIA, AND WAHKIAKUM COUNTIES

	Rates	Fringes
Truck drivers:		
ZONE 1		
GROUP 1	$ 28.52	14.62
GROUP 2	$ 28.64	14.62
GROUP 3	$ 28.78	14.62
GROUP 4	$ 29.05	14.62
GROUP 5	$ 29.27	14.62
GROUP 6	$ 29.45	14.62
GROUP 7	$ 29.65	14.62

Zone Differential (Add to Zone 1 Rates):
Zone 2 - $0.65
Zone 3 - 1.15
Zone 4 - 1.70
Zone 5 - 2.75

BASE POINTS: ASTORIA, THE DALLES, LONGVIEW AND VANCOUVER

ZONE 1: Projects within 30 miles of the respective city hall.

ZONE 2: More than 30 miles but less than 40 miles from the respective city hall.

ZONE 3: More than 40 miles but less than 50 miles from the respective city hall.

ZONE 4: More than 50 miles but less than 80 miles from the respective city hall.

ZONE 5: More than 80 miles from the respective city hall.

TRUCK DRIVERS CLASSIFICATIONS

GROUP 1: A Frame or Hydra lifrt truck w/load bearing surface; Articulated Dump Truck; Battery Rebuilders; Bus or Manhaul Driver; Concrete Buggies (power operated); Concrete Pump Truck; Dump Trucks, side, end and bottom dumps, including Semi Trucks and Trains or combinations there of: up to and including 10 cu. yds.; Lift Jitneys, Fork Lifts (all sizes in loading, unloading and transporting material on job site); Loader and/or Leverman on Concrete Dry Batch Plant (manually operated); Pilot Car; Pickup Truck; Solo Flat Bed and misc. Body Trucks, 0-10 tons; Truck Tender; Truck Mechanic Tender; Water Wagons (rated capacity) up to 3,000 gallons; Transit Mix and Wet or Dry Mix - 5 cu. yds. and under; Lubrication Man, Fuel Truck Driver, Tireman, Wash Rack, Steam Cleaner or combinations; Team Driver; Slurry Truck Driver or Leverman; Tireman

INFORMATIONAL COPY ONLY - NOT FOR BIDDING

GROUP 2: Boom Truck/Hydra-lift or Retracting Crane; Challenger; Dumpsters or similar equipment all sizes; Dump Trucks/Articulated Dumps 6 cu to 10 cu.; Flaherty Spreader Driver or Leverman; Lowbed Equipment, Flat Bed Semi-trailer or doubles transporting equipment or wet or dry materials; Lumber Carrier, Driver-Straddle Carrier (used in loading, unloading and transporting of materials on job site); Oil Distributor Driver or Leverman; Transit mix and wet or dry mix trcuks: over 5 cu. yds. and including 7 cu. yds.; Vacuum Trucks; Water truck/Wagons (rated capacity) over 3,000 to 5,000 gallons

GROUP 3: Ammonia Nitrate Distributor Driver; Dump trucks, side, end and bottom dumps, including Semi Trucks and Trains or combinations thereof: over 10 cu. yds. and including 30 cu. yds. includes Articulated Dump Trucks; Self-Propelled Street Sweeper; Transit mix and wet or dry mix truck: over 7 cu yds. and including 11 cu yds.; Truck Mechanic-Welder-Body Repairman; Utility and Clean-up Truck; Water Wagons (rated capacity) over 5,000 to 10,000 gallons

GROUP 4: Asphalt Burner; Dump Trucks, side, end and bottom cumps, including Semi-Trucks and Trains or combinations thereof: over 30 cu. yds. and including 50 cu. yds. includes Articulated Dump Trucks; Fire Guard; Transit Mix and Wet or Dry Mix Trucks, over 11 cu. yds. and including 15 cu. yds.; Water Wagon (rated capacity) over 10,000 gallons to 15,000 gallons

GROUP 5: Composite Crewman; Dump Trucks, side, end and bottom dumps, including Semi Trucks and Trains or combinations thereof: over 50 cu. yds. and including 60 cu. yds. includes Articulated Dump Trucks

GROUP 6: Bulk Cement Spreader w/o Auger; Dry Pre-Batch concrete Mix Trucks; Dump trucks, side, end and bottom dumps, including Semi Trucks and Trains of combinations thereof: over 60 cu. yds. and including 80 cu. yds., and includes Articulated Dump Trucks; Skid Truck

GROUP 7: Dump Trucks, side, end and bottom dumps, including Semi Trucks and Trains or combinations thereof: over 80 cu. yds. and including 100 cu. yds., includes Articulated Dump Trucks; Industrial Lift Truck (mechanical tailgate)

INFORMATIONAL COPY ONLY - NOT FOR BIDDING

* TEAM0174-001 01/01/2018

CLALLAM, GRAYS HARBOR, ISLAND, JEFFERSON, KING, KITSAP, LEWIS, MASON, PACIFIC (North of a straight line made by extending the north boundary line of Wahkiakum County west to the Pacific Ocean), PIERCE, SAN JUAN, SKAGIT, SNOHOMISH, THURSTON AND WHATCOM COUNTIES

	Rates	Fringes
Truck drivers:		
ZONE A:		
GROUP 1:.....	$ 35.63	18.67
GROUP 2:.....	$ 34.79	18.67
GROUP 3:.....	$ 31.98	18.67
GROUP 4:.....	$ 27.01	18.67
GROUP 5:.....	$ 35.18	18.67

ZONE B (25-45 miles from center of listed cities*): Add $.70 per hour to Zone A rates.
ZONE C (over 45 miles from centr of listed cities*): Add $1.00 per hour to Zone A rates.

*Zone pay will be calculated from the city center of the following listed cities:

BELLINGHAM	CENTRALIA	RAYMOND	OLYMPIA
EVERETT	SHELTON	ANACORTES	BELLEVUE
SEATTLE	PORT ANGELES	MT. VERNON	KENT
TACOMA	PORT TOWNSEND	ABERDEEN	BREMERTON

TRUCK DRIVERS CLASSIFICATIONS

GROUP 1 - "A-frame or Hydralift" trucks and Boom trucks or similar equipment when "A" frame or "Hydralift" and Boom truck or similar equipment is used; Buggymobile; Bulk Cement Tanker; Dumpsters and similar equipment, Tournorockers, Tournowagon, Tournotrailer, Cat DW series, Terra Cobra, Le Tourneau, Westinghouse, Athye Wagon, Euclid Two and Four Wheeled power tractor with trailer and similar top-loaded equipment transporting material: Dump Trucks, side, end and bottom dump, including semi-trucks and trains or combinations thereof with 16 yards to 30 yards capacity: Over 30 yards $.15 per hour additional for each 10 yard increment; Explosive Truck (field mix) and similar equipment; Hyster Operators (handling bulk loose aggregates); Lowbed and Heavy Duty Trailer; Road Oil Distributor Driver; Spreader, Flaherty Transit mix used exclusively in heavy construction; Water Wagon and Tank Truck-3,000 gallons and over capacity

INFORMATIONAL COPY ONLY - NOT FOR BIDDING

GROUP 2 - Bulllifts, or similar equipment used in loading or unloading trucks, transporting materials on job site; Dumpsters, and similar equipment, Tournorockers, Tournowagon, Turnotrailer, Cat. D.W. Series, Terra Cobra, Le Tourneau, Westinghouse, Athye wagon, Euclid two and four-wheeled power tractor with trailer and similar top-loaded equipment transporting material: Dump trucks, side, end and bottom dump, including semi-trucks and trains or combinations thereof with less than 16 yards capacity; Flatbed (Dual Rear Axle); Grease Truck, Fuel Truck, Greaser, Battery Service Man and/or Tire Service Man; Leverman and loader at bunkers and batch plants; Oil tank transport; Scissor truck; Slurry Truck; Sno-Go and similar equipment; Swampers; Straddler Carrier (Ross, Hyster) and similar equipment; Team Driver; Tractor (small, rubber-tired)(when used within Teamster jurisdiction); Vacuum truck; Water Wagon and Tank trucks-less than 3,000 gallons capacity; Winch Truck; Wrecker, Tow truck and similar equipment

GROUP 3 - Flatbed (single rear axle); Pickup Sweeper; Pickup Truck. (Adjust Group 3 upward by $2.00 per hour for onsite work only)

GROUP 4 - Escort or Pilot Car

GROUP 5 - Mechanic

HAZMAT PROJECTS

Anyone working on a HAZMAT job, where HAZMAT certification is required, shall be compensated as a premium, in addition to the classification working in as follows:
LEVEL C: +$.25 per hour - This level uses an air purifying respirator or additional protective clothing.
LEVEL B: +$.50 per hour - Uses same respirator protection as Level A. Supplied air line is provided in conjunction with a chemical "splash suit."
LEVEL A: +$.75 per hour - This level utilizes a fully-encapsulated suit with a self-contained breathing apparatus or a supplied air line.

INFORMATIONAL COPY ONLY- NOT FOR BIDDING

TEAM0690-004 06/01/2018

ADAMS, ASOTIN, BENTON, CHELAN, COLUMBIA, DOUGLAS, FERRY, FRANKLIN, GARFIELD, GRANT KITTITAS, LINCOLN, OKANOGAN, PEND OREILLE, SPOKANE, STEVENS, WALLA WALLA, WHITMAN AND YAKIMA COUNTIES

	Rates	Fringes
Truck drivers: (AREA 1:		
SPOKANE ZONE CENTER: Adams, Chelan, Douglas, Ferry, rant, Kittitas, Lincoln, Okanogan, Pen Oreille, Spokane, Stevens, and Whitman Counties		
AREA 1: LEWISTON ZONE CENTER: Asotin, Columbia, and Garfield Counties		
AREA 2: PASCO ZONE CENTER: Benton, Franklin, Walla Walla and Yakima Counties)		
AREA 1:		
GROUP 1	$ 24.32	17.30
GROUP 2	$ 26.86	17.30
GROUP 3	$ 26.97	17.30
GROUP 4	$ 27.30	17.30
GROUP 5	$ 27.41	17.30
GROUP 6	$ 29.57	17.30
GROUP 7	$ 28.11	17.30
GROUP 8	$ 28.43	17.30
AREA 2:		
GROUP 1	$ 26.32	17.30
GROUP 2	$ 28.86	17.30
GROUP 3	$ 28.97	17.30
GROUP 4	$ 29.30	17.30
GROUP 5	$ 29.41	17.30
GROUP 6	$ 29.57	17.30
GROUP 7	$ 28.05	17.30
GROUP 8	$ 30.43	17.30

Zone Differential (Add to Zone 1 rate: Zone 1 + $2.00)

BASE POINTS: Spokane, Pasco, Lewiston
Zone 1: 0-45 radius miles from the main post office.
Zone 2: Outside 45 radius miles from the main post office

TRUCK DRIVERS CLASSIFICATIONS

GROUP 1: Escort Driver or Pilot Car; Employee Haul; Power Boat Hauling Employees or Material

GROUP 2: Fish Truck; Flat Bed Truck; Fork Lift (3000 lbs. and under); Leverperson (loading trucks at bunkers); Trailer Mounted Hydro Seeder and Mulcher; Seeder & Mulcher; Stationary Fuel Operator; Tractor (small, rubber-tired, pulling trailer or similar equipment)

INFORMATIONAL COPY ONLY - NOT FOR BIDDING

GROUP 3: Auto Crane (2000 lbs. capacity); Buggy Mobile & Similar; Bulk Cement Tanks & Spreader; Dumptor (6 yds. & under); Flat Bed Truck with Hydraullic System; Fork Lift (3001-16,000 lbs.); Fuel Truck Driver, Steamcleaner & Washer; Power Operated Sweeper; Rubber-tired Tunnel Jumbo; Scissors Truck; Slurry Truck Driver; Straddle Carrier (Ross, Hyster, & similar); Tireperson; Transit Mixers & Truck Hauling Concrete (3 yd. to & including 6 yds.); Trucks, side, end, bottom & articulated end dump (3 yards to and including 6 yds.); Warehouseperson (to include shipping & receiving); Wrecker & Tow Truck

GROUP 4: A-Frame; Burner, Cutter, & Welder; Service Greaser; Trucks, side, end, bottom & articulated end dump (over 6 yards to and including 12 yds.); Truck Mounted Hydro Seeder; Warehouseperson; Water Tank truck (0-8,000 gallons)

GROUP 5: Dumptor (over 6 yds.); Lowboy (50 tons & under); Self- loading Roll Off; Semi-Truck & Trailer; Tractor with Steer Trailer; Transit Mixers and Trucks Hauling Concrete (over 6 yds. to and including 10 yds.); Trucks, side, end, bottom and end dump (over 12 yds. to & including 20 yds.); Truck-Mounted Crane (with load bearing surface either mounted or pulled, up to 14 ton); Vacuum Truck (super sucker, guzzler, etc.)

GROUP 6: Flaherty Spreader Box Driver; Flowboys; Fork Lift (over 16,000 lbs.); Dumps (Semi-end); Mechanic (Field); Semi- end Dumps; Transfer Truck & Trailer; Transit Mixers & Trucks Hauling Concrete (over 10 yds. to & including 20 yds.); Trucks, side, end, bottom and articulated end dump (over 20 yds. to & including 40 yds.); Truck and Pup; Tournarocker, DWs & similar with 2 or more 4 wheel-power tractor with trailer, gallonage or yardage scale, whichever is greater Water Tank Truck (8,001- 14,000 gallons); Lowboy(over 50 tons)

GROUP 7: Oil Distributor Driver; Stringer Truck (cable oeprated trailer); Transit Mixers & Trucks Hauling Concrete (over 20 yds.); Truck, side, end, bottom end dump (over 40 yds. to & including 100 yds.); Truck Mounted Crane (with load bearing surface either mounted or pulled (16 through 25 tons);

GROUP 8: Prime Movers and Stinger Truck; Trucks, side, end, bottom and articulated end dump (over 100 yds.); Helicopter Pilot Hauling Employees or Materials

Footnote A - Anyone working on a HAZMAT job, where HAZMAT certification is required, shall be compensated as a premium, in additon to the classification working in as follows:

LEVEL C-D: - $.50 PER HOUR (This is the lowest level of protection. This level may use an air purifying respirator or additional protective clothing.

INFORMATIONAL COPY ONLY- NOT FOR BIDDING

LEVEL A-B: - $1.00 PER HOUR (Uses supplied air is conjunction with a chemical spash suit or fully encapsulated suit with a self-contained breathing apparatus.

Employees shall be paid Hazmat pay in increments of four(4) and eight(8) hours.

NOTE:
Trucks Pulling Equipment Trailers: shall receive $.15/hour over applicable truck rate

---

WELDERS - Receive rate prescribed for craft performing operation to which welding is incidental.

==========

Note: Executive Order (EO) 13706, Establishing Paid Sick Leave for Federal Contractors applies to all contracts subject to the Davis-Bacon Act for which the contract is awarded (and any solicitation was issued) on or after January 1, 2017. If this contract is covered by the EO, the contractor must provide employees with 1 hour of paid sick leave for every 30 hours they work, up to 56 hours of paid sick leave each year. Employees must be permitted to use paid sick leave for their own illness, injury or other health-related needs, including preventive care; to assist a family member (or person who is like family to the employee) who is ill, injured, or has other health-related needs, including preventive care; or for reasons resulting from, or to assist a family member (or person who is like family to the employee) who is a victim of, domestic violence, sexual assault, or stalking. Additional information on contractor requirements and worker protections under the EO is available at www.dol.gov/whd/govcontracts.

Unlisted classifications needed for work not included within the scope of the classifications listed may be added after award only as provided in the labor standards contract clauses (29CFR 5.5 (a) (1) (ii)).

INFORMATIONAL COPY ONLY - NOT FOR BIDDING

The body of each wage determination lists the classification and wage rates that have been found to be prevailing for the cited type(s) of construction in the area covered by the wage determination. The classifications are listed in alphabetical order of "identifiers" that indicate whether the particular rate is a union rate (current union negotiated rate for local), a survey rate (weighted average rate) or a union average rate (weighted union average rate).

Union Rate Identifiers

A four letter classification abbreviation identifier enclosed in dotted lines beginning with characters other than "SU" or "UAVG" denotes that the union classification and rate were prevailing for that classification in the survey. Example: PLUM0198-005 07/01/2014. PLUM is an abbreviation identifier of the union which prevailed in the survey for this classification, which in this example would be Plumbers. 0198 indicates the local union number or district council number where applicable, i.e., Plumbers Local 0198. The next number, 005 in the example, is an internal number used in processing the wage determination. 07/01/2014 is the effective date of the most current negotiated rate, which in this example is July 1, 2014.

Union prevailing wage rates are updated to reflect all rate changes in the collective bargaining agreement (CBA) governing this classification and rate.

Survey Rate Identifiers

Classifications listed under the "SU" identifier indicate that no one rate prevailed for this classification in the survey and the published rate is derived by computing a weighted average rate based on all the rates reported in the survey for that classification. As this weighted average rate includes all rates reported in the survey, it may include both union and non-union rates. Example: SULA2012-007 5/13/2014. SU indicates the rates are survey rates based on a weighted average calculation of rates and are not majority rates. LA indicates the State of Louisiana. 2012 is the year of survey on which these classifications and rates are based. The next number, 007 in the example, is an internal number used in producing the wage determination. 5/13/2014 indicates the survey completion date for the classifications and rates under that identifier.

Survey wage rates are not updated and remain in effect until a new survey is conducted.

Union Average Rate Identifiers

INFORMATIONAL COPY ONLY - NOT FOR BIDDING

Classification(s) listed under the UAVG identifier indicate that no single majority rate prevailed for those classifications; however, 100% of the data reported for the classifications was union data. EXAMPLE: UAVG-OH-0010 08/29/2014. UAVG indicates that the rate is a weighted union average rate. OH indicates the state. The next number, 0010 in the example, is an internal number used in producing the wage determination. 08/29/2014 indicates the survey completion date for the classifications and rates under that identifier.

A UAVG rate will be updated once a year, usually in January of each year, to reflect a weighted average of the current negotiated/CBA rate of the union locals from which the rate is based.

WAGE DETERMINATION APPEALS PROCESS

1.) Has there been an initial decision in the matter? This can be:

* an existing published wage determination
* a survey underlying a wage determination
* a Wage and Hour Division letter setting forth a position on a wage determination matter
* a conformance (additional classification and rate) ruling

On survey related matters, initial contact, including requests for summaries of surveys, should be with the Wage and Hour Regional Office for the area in which the survey was conducted because those Regional Offices have responsibility for the Davis-Bacon survey program. If the response from this initial contact is not satisfactory, then the process described in 2.) and 3.) should be followed.

With regard to any other matter not yet ripe for the formal process described here, initial contact should be with the Branch of Construction Wage Determinations. Write to:

Branch of Construction Wage Determinations
Wage and Hour Division
U.S. Department of Labor
200 Constitution Avenue, N.W.
Washington, DC 20210

2.) If the answer to the question in 1.) is yes, then an interested party (those affected by the action) can request review and reconsideration from the Wage and Hour Administrator (See 29 CFR Part 1.8 and 29 CFR Part 7). Write to:

INFORMATIONAL COPY ONLY - NOT FOR BIDDING

Wage and Hour Administrator
U.S. Department of Labor
200 Constitution Avenue, N.W.
Washington, DC 20210

The request should be accompanied by a full statement of the interested party's position and by any information (wage payment data, project description, area practice material, etc.) that the requestor considers relevant to the issue.

3.) If the decision of the Administrator is not favorable, an interested party may appeal directly to the Administrative Review Board (formerly the Wage Appeals Board). Write to:

Administrative Review Board
U.S. Department of Labor
200 Constitution Avenue, N.W.
Washington, DC 20210

4.) All decisions by the Administrative Review Board are final.

==========

END OF GENERAL DECISION

INFORMATIONAL COPY ONLY- NOT FOR BIDDING

State of Washington
Department of Labor & Industries

Prevailing Wage Section - Telephone 360-902-5335
PO Box 44540, Olympia, WA 98504-4540

Washington State Prevailing Wage

The PREVAILING WAGES listed here include both the hourly wage rate and the hourly rate of fringe benefits. On public works projects, worker's wage and benefit rates must add to not less than this total. A brief description of overtime calculation requirements are provided on the Benefit Code Key.

Journey Level Prevailing Wage Rates for the Effective Date: 1/22/2019

INFORMATIONAL COPY ONLY - NOT FOR BIDDING

County	Trade	Job Classification	Wage	Holiday	Overtime	Note
Grant	Flaggers	Journey Level	$37.19	7B	1M	
Grant	Laborers	Air And Hydraulic Track Drill	$39.83	7B	1M	
Grant	Laborers	Asphalt Raker	$39.83	7B	1M	
Grant	Laborers	Asphalt Roller, Walking	$39.56	7B	1M	
Grant	Laborers	Brick Pavers	$39.29	7B	1M	
Grant	Laborers	Brush Hog Feeder	$39.29	7B	1M	
Grant	Laborers	Brush Machine	$39.83	7B	1M	
Grant	Laborers	Caisson Worker, Free Air	$39.83	7B	1M	
Grant	Laborers	Carpenter Tender	$39.29	7B	1M	
Grant	Laborers	Cement Finisher Tender	$39.56	7B	1M	
Grant	Laborers	Cement Handler	$39.29	7B	1M	
Grant	Laborers	Chain Saw Operator & Faller	$39.83	7B	1M	
Grant	Laborers	Clean-up Laborer	$39.29	7B	1M	
Grant	Laborers	Compaction Equipment	$39.56	7B	1M	
Grant	Laborers	Concrete Crewman	$39.29	7B	1M	
Grant	Laborers	Concrete Saw, Walking	$39.56	7B	1M	
Grant	Laborers	Concrete Signalman	$39.29	7B	1M	
Grant	Laborers	Concrete Stack	$39.83	7B	1M	
Grant	Laborers	Confined Space Attendant	$39.29	7B	1M	
Grant	Laborers	Crusher Feeder	$39.29	7B	1M	
Grant	Laborers	Demolition	$39.29	7B	1M	
Grant	Laborers	Demolition Torch	$39.56	7B	1M	
Grant	Laborers	Dope Pot Fireman, Non-mechanical	$39.56	7B	1M	
Grant	Laborers	Driller Helper (when Required To Move & Position Machine)	$39.56	7B	1M	
Grant	Laborers	Drills With Dual Masts	$40.11	7B	1M	
Grant	Laborers	Dry Stack Walls	$39.29	7B	1M	
Grant	Laborers	Dumpman	$39.29	7B	1M	
Grant	Laborers	Erosion Control Laborer	$39.29	7B	1M	

Grant	Laborers	Final Detail Cleanup (i.e., Dusting, Vacuuming, Window Cleaning; Not Construction Debris Cleanup)	$37.19	7B	1M	
Grant	Laborers	Firewatch	$39.29	7B	1M	
Grant	Laborers	Form Cleaning Machine Feeder, Stacker	$39.29	7B	1M	
Grant	Laborers	Form Setter, Paving	$39.56	7B	1M	
Grant	Laborers	General Laborer	$39.29	7B	1M	
Grant	Laborers	Grade Checker	$41.82	7B	1M	
Grant	Laborers	Grout Machine Header Tender	$39.29	7B	1M	
Grant	Laborers	Guard Rail	$39.29	7B	1M	
Grant	Laborers	Gunite	$39.83	7B	1M	
Grant	Laborers	Hazardous Waste Worker (level A)	$40.11	7B	1M	
Grant	Laborers	Hazardous Waste Worker (level B)	$39.83	7B	1M	
Grant	Laborers	Hazardous Waste Worker (level C)	$39.56	7B	1M	
Grant	Laborers	Hazardous Waste Worker (level D)	$39.29	7B	1M	
Grant	Laborers	Hdpe Or Similar Liner Installer	$39.29	7B	1M	
Grant	Laborers	High Scaler	$39.83	7B	1M	
Grant	Laborers	Jackhammer Operator Miner, Class "b"	$39.56	7B	1M	
Grant	Laborers	Laser Beam Operator	$39.83	7B	1M	
Grant	Laborers	Miner, Class "a"	$39.29	7B	1M	
Grant	Laborers	Miner, Class "c"	$39.83	7B	1M	
Grant	Laborers	Miner, Class "d"	$40.11	7B	1M	
Grant	Laborers	Monitor Operator, Air Track Or Similar Mounting	$39.83	7B	1M	
Grant	Laborers	Mortar Mixer	$39.83	7B	1M	
Grant	Laborers	Nipper	$39.29	7B	1M	
Grant	Laborers	Nozzleman	$39.83	7B	1M	
Grant	Laborers	Nozzleman, Water (to Include Fire Hose), Air Or Steam	$39.56	7B	1M	
Grant	Laborers	Pavement Breaker, 90 Lbs. & Over	$39.83	7B	1M	
Grant	Laborers	Pavement Breaker, Under 90 Lbs.	$39.56	7B	1M	
Grant	Laborers	Pipelayer	$39.83	7B	1M	
Grant	Laborers	Pipelayer, Corrugated Metal Culvert And Multi-plate	$39.56	7B	1M	
Grant	Laborers	Pipewrapper	$39.83	7B	1M	
Grant	Laborers	Plasterer Tenders	$39.83	7B	1M	
Grant	Laborers	Pot Tender	$39.56	7B	1M	
Grant	Laborers	Powderman	$41.48	7B	1M	
Grant	Laborers	Powderman Helper	$39.56	7B	1M	

INFORMATIONAL COPY ONLY - NOT FOR BIDDING

Grant	Laborers	Power Buggy Operator	$39.56	7B	1M	
Grant	Laborers	Power Tool Operator, Gas, Electric, Pneumatic	$39.56	7B	1M	
Grant	Laborers	Railroad Equipment, Power Driven, Except Dual Mobile	$39.56	7B	1M	
Grant	Laborers	Railroad Power Spiker Or Puller, Dual Mobile	$39.56	7B	1M	
Grant	Laborers	Remote Equipment Operator	$40.11	7B	1M	
Grant	Laborers	Remote Equipment Operator (i.e. Compaction And Demolition)	$39.56	7B	1M	
Grant	Laborers	Rigger/signal Person	$39.56	7B	1M	
Grant	Laborers	Riprap Person	$39.29	7B	1M	
Grant	Laborers	Rodder & Spreader	$39.56	7B	1M	
Grant	Laborers	Sandblast Tailhoseman	$39.29	7B	1M	
Grant	Laborers	Scaffold Erector, Wood Or Steel	$39.29	7B	1M	
Grant	Laborers	Stake Jumper	$39.29	7B	1M	
Grant	Laborers	Structural Mover	$39.29	7B	1M	
Grant	Laborers	Tailhoseman (water Nozzle)	$39.29	7B	1M	
Grant	Laborers	Timber Bucker & Faller (by Hand)	$39.29	7B	1M	
Grant	Laborers	Track Laborer (rr)	$39.29	7B	1M	
Grant	Laborers	Traffic Control Laborer	$37.19	7B	1M	8T
Grant	Laborers	Traffic Control Supervisor	$38.19	7B	1M	8S
Grant	Laborers	Trencher, Shawnee	$39.56	7B	1M	
Grant	Laborers	Trenchless Technology Technician	$39.83	7B	1M	
Grant	Laborers	Truck Loader	$39.29	7B	1M	
Grant	Laborers	Tugger Operator	$39.56	7B	1M	
Grant	Laborers	Vibrators, All	$39.83	7B	1M	
Grant	Laborers	Wagon Drills	$39.56	7B	1M	
Grant	Laborers	Water Pipe Liner	$39.56	7B	1M	
Grant	Laborers	Welder, Electric, Manual Or Automatic (hdpe Or Similar Pipe And Liner)	$40.11	7B	1M	
Grant	Laborers	Well-point Person	$39.29	7B	1M	
Grant	Laborers	Wheelbarrow, Power Driven	$39.56	7B	1M	
Grant	Power Equipment Operators	A-frame Truck (2 Or More Drums)	$44.39	7B	1M	8D
Grant	Power Equipment Operators	A-frame Truck (single Drum)	$43.78	7B	1M	8D
Grant	Power Equipment Operators	Asphalt Plant Operator	$44.99	7B	1M	8D
Grant	Power Equipment Operators	Assistant Plant Operator, Fireman Or Pugmixer (asphalt)	$43.78	7B	1M	8D
Grant	Power Equipment Operators	Assistant Refrigeration Plant & Chiller Operator (over 1000 Ton)	$44.39	7B	1M	8D
Grant	Power Equipment Operators	Assistant Refrigeration Plant (under 1000 Ton)	$43.78	7B	1M	8D

INFORMATIONAL COPY ONLY - NOT FOR BIDDING

Grant	Power Equipment Operators	Automatic Subgrader (ditches & Trimmers)	$44.99	7B	1M	8D
Grant	Power Equipment Operators	Backfillers (cleveland & Similar)	$44.39	7B	1M	8D
Grant	Power Equipment Operators	Backhoe & Hoe Ram (under 3/4 Yd.)	$44.71	7B	1M	8D
Grant	Power Equipment Operators	Backhoe (45,000 Gw & Under)	$44.71	7B	1M	8D
Grant	Power Equipment Operators	Backhoe (45,000 Gw To 110,000 Gw)	$44.99	7B	1M	8D
Grant	Power Equipment Operators	Backhoe (over 110,000 Gw)	$45.26	7B	1M	8D
Grant	Power Equipment Operators	Backhoes & Hoe Ram (3 Yds & Over)	$45.26	7B	1M	8D
Grant	Power Equipment Operators	Backhoes & Hoe Ram (3/4 Yd. To 3 Yd.)	$44.99	7B	1M	8D
Grant	Power Equipment Operators	Bagley Or Stationary Scraper	$43.78	7B	1M	8D
Grant	Power Equipment Operators	Batch & Wet Mix Operator (multiple Units, 2 & Incl. 4)	$44.99	7B	1M	8D
Grant	Power Equipment Operators	Batch Plant & Wet Mix Operator, Single Unit (concrete)	$44.39	7B	1M	8D
Grant	Power Equipment Operators	Batch Plant (over 4 Units)	$44.99	7B	1M	8D
Grant	Power Equipment Operators	Belt Finishing Machine	$43.78	7B	1M	8D
Grant	Power Equipment Operators	Belt Loader (kocal Or Similar)	$44.39	7B	1M	8D
Grant	Power Equipment Operators	Belt-crete Conveyors With Power Pack Or Similar	$44.39	7B	1M	8D
Grant	Power Equipment Operators	Bending Machine	$44.39	7B	1M	8D
Grant	Power Equipment Operators	Bit Grinders	$43.46	7B	1M	8D
Grant	Power Equipment Operators	Blade (finish & Bluetop), Automatic, Cmi, Abc, Finish Atney & Huber & Similar When Used As Automatic	$45.26	7B	1M	8D
Grant	Power Equipment Operators	Blade Operator (motor Patrol & Attachments)	$44.99	7B	1M	8D
Grant	Power Equipment Operators	Blower Operator (cement)	$43.78	7B	1M	8D
Grant	Power Equipment Operators	Boat Operator	$43.46	7B	1M	8D
Grant	Power Equipment Operators	Bob Cat (skid Steer)	$44.39	7B	1M	8D
Grant	Power Equipment Operators	Bolt Threading Machine	$43.46	7B	1M	8D
Grant	Power Equipment Operators	Boom Cats (side)	$44.99	7B	1M	8D
Grant	Power Equipment Operators	Boring Machine (earth)	$44.39	7B	1M	8D
Grant	Power Equipment Operators	Boring Machine (Rock Under 8 inch Bit - Quarry Master, Joy Or Similar)	$44.39	7B	1M	8D
Grant	Power Equipment Operators	Bump Cutter (wayne, Saginau Or Similar)	$44.39	7B	1M	8D
Grant	Power Equipment Operators	Cableway Controller (dispatcher)	$44.99	7B	1M	8D
Grant	Power Equipment Operators	Cableway Operators	$45.26	7B	1M	8D
Grant	Power Equipment Operators	Canal Lining Machine (concrete)	$44.39	7B	1M	8D

INFORMATIONAL COPY ONLY - NOT FOR BIDDING

Grant	Power Equipment Operators	Carrydeck & Boom Truck (under 25 Tons)	$44.71	7B	1M	8D
Grant	Power Equipment Operators	Cement Hog	$43.78	7B	1M	8D
Grant	Power Equipment Operators	Chipper (without Crane) Cleaning & Doping Machine (pipeline)	$44.39	7B	1M	8D
Grant	Power Equipment Operators	Clamshell, Dragline	$46.36	7B	1M	8D
Grant	Power Equipment Operators	Compactor (self-propelled With Blade)	$44.99	7B	1M	8D
Grant	Power Equipment Operators	Compressor (2000 Cfm Or Over, 2 Or More, Gas Diesel Or Electric Power)	$43.78	7B	1M	8D
Grant	Power Equipment Operators	Compressors (under 2000 Cfm, Gas, Diesel Or Electric Power)	$43.46	7B	1M	8D
Grant	Power Equipment Operators	Concrete Cleaning / Decontamination Machine Operator	$45.26	7B	1M	8D
Grant	Power Equipment Operators	Concrete Pump Boon Truck	$44.99	7B	1M	8D
Grant	Power Equipment Operators	Concrete Pumps (squeeze-crete, Flow-crete, Whitman & Similar)	$44.55	7B	1M	8D
Grant	Power Equipment Operators	Concrete Saw (multiple Cut)	$43.78	7B	1M	8D
Grant	Power Equipment Operators	Concrete Slip Form Paver	$44.99	7B	1M	8D
Grant	Power Equipment Operators	Conveyor Aggregate Delivery Systems (c.a.d.)	$44.99	7B	1M	8D
Grant	Power Equipment Operators	Crane Oiler-Driver (cdl Required) & Cable Tender, Mucking Machine	$43.46	7B	1M	8D
Grant	Power Equipment Operators	Cranes (25 Tons & Under), All Attachments Incl. Clamshell, Dragline	$44.71	7B	1M	8D
Grant	Power Equipment Operators	Cranes (25 Tons To And Including 45 Tons), All Attachments Incl. Clamshell, Dragline	$44.99	7B	1M	8D
Grant	Power Equipment Operators	Cranes (45 Tons To 85 Tons), All Attachments Incl. Clamshell And Dragline	$45.26	7B	1M	8D
Grant	Power Equipment Operators	Cranes (85 Tons & Over) And All Climbing, Overhead, Rail & Tower. All Attachments Incl.	$46.36	7B	1M	8D
Grant	Power Equipment Operators	Crusher Feeder	$43.46	7B	1M	8D
Grant	Power Equipment Operators	Crusher, Grizzle & Screening Plant Operator	$44.99	7B	1M	8D
Grant	Power Equipment Operators	Curb Extruder (asphalt Or Concrete)	$44.55	7B	1M	8D
Grant	Power Equipment Operators	Deck Engineer	$44.39	7B	1M	8D
Grant	Power Equipment Operators	Deck Hand	$43.46	7B	1M	8D
Grant	Power Equipment Operators	Derricks & Stifflegs (65 Tons & Over)	$45.26	7B	1M	8D
Grant	Power Equipment Operators		$44.71	7B	1M	8D

INFORMATIONAL COPY ONLY-NOT FOR BIDDING

		Derricks & Stifflegs (under 65 Tons)				
Grant	Power Equipment Operators	Distributor Leverman	$43.78	7B	1M	8D
Grant	Power Equipment Operators	Ditch Witch Or Similar	$43.78	7B	1M	8D
Grant	Power Equipment Operators	Dope Pots (power Agitated	$43.78	7B	1M	8D
Grant	Power Equipment Operators	Dozer / Tractor (up To D-6 Or Equivalent) And Traxcavator	$44.39	7B	1M	8D
Grant	Power Equipment Operators	Dozer / Tractors (d-6 & Equivalent & Over)	$44.99	7B	1M	8D
Grant	Power Equipment Operators	Dozer, 834 R/t & Similar	$44.99	7B	1M	8D
Grant	Power Equipment Operators	Drill Doctor	$44.99	7B	1M	8D
Grant	Power Equipment Operators	Driller Licensed	$46.36	7B	1M	8D
Grant	Power Equipment Operators	Drillers Helper	$43.46	7B	1M	8D
Grant	Power Equipment Operators	Drilling Equipment (8 inch Bit & Over - Robbins, Reverse Circulation & Similar)	$44.71	7B	1M	8D
Grant	Power Equipment Operators	Drills (churn, Core, Calyx Or Diamond)	$44.55	7B	1M	8D
Grant	Power Equipment Operators	Elevating Belt (holland Type)	$45.26	7B	1M	8D
Grant	Power Equipment Operators	Elevating Belt-type Loader (euclid, Barber Green & Similar)	$44.39	7B	1M	8D
Grant	Power Equipment Operators	Elevating Grader-type Loader (dumor, Adams Or Similar)	$44.39	7B	1M	8D
Grant	Power Equipment Operators	Elevator Hoisting Materials	$43.78	7B	1M	8D
Grant	Power Equipment Operators	Equipment Serviceman, Greaser & Oiler	$44.55	7B	1M	8D
Grant	Power Equipment Operators	Fireman & Heater Tender	$43.46	7B	1M	8D
Grant	Power Equipment Operators	Fork Lift Or Lumber Stacker, Hydra-life & Similar	$43.78	7B	1M	8D
Grant	Power Equipment Operators	Generator Plant Engineers (diesel Or Electric)	$44.39	7B	1M	8D
Grant	Power Equipment Operators	Gin Trucks (pipeline)	$43.78	7B	1M	8D
Grant	Power Equipment Operators	Grade Checker	$44.71	7B	1M	8D
Grant	Power Equipment Operators	Gunite Combination Mixer & Compressor	$44.39	7B	1M	8D
Grant	Power Equipment Operators	H.d. Mechanic	$45.26	7B	1M	8D
Grant	Power Equipment Operators	H.d. Welder	$45.26	7B	1M	8D
Grant	Power Equipment Operators	Heavy Equipment Robotics Operator	$45.26	7B	1M	8D
Grant	Power Equipment Operators	Helicopter Pilot	$46.36	7B	1M	8D
Grant	Power Equipment Operators	Helper, Mechanic Or Welder, H.D	$43.46	7B	1M	8D
Grant	Power Equipment Operators	Hoe Ram	$44.71	7B	1M	8D
Grant	Power Equipment Operators	Hoist (2 Or More Drums Or Tower Hoist)	$44.55	7B	1M	8D
Grant	Power Equipment Operators	Hoist, Single Drum	$43.78	7B	1M	8D
Grant	Power Equipment Operators		$45.26	7B	1M	8D

INFORMATIONAL COPY ONLY - NOT FOR BIDDING

		Hydraulic Platform Trailers (goldhofer, Shaurerly And Similar)				
Grant	Power Equipment Operators	Hydro-seeder, Mulcher, Nozzleman	$43.46	7B	1M	8D
Grant	Power Equipment Operators	Lime Batch Tank Operator (recycle Train)	$44.99	7B	1M	8D
Grant	Power Equipment Operators	Lime Brain Operator (recycle Train)	$44.99	7B	1M	8D
Grant	Power Equipment Operators	Loader (360 Degrees Revolving Koehring Scooper Or Similar)	$45.26	7B	1M	8D
Grant	Power Equipment Operators	Loader Operator (front-end & Overhead, 4 Yds. Incl. 8 Yds.)	$44.99	7B	1M	8D
Grant	Power Equipment Operators	Loaders (bucket Elevators And Conveyors)	$43.78	7B	1M	8D
Grant	Power Equipment Operators	Loaders (overhead & Front-end, Over 8 Yds. To 10 Yds.)	$45.26	7B	1M	8D
Grant	Power Equipment Operators	Loaders (overhead & Front-end, Under 4 Yds.. R/t)	$44.55	7B	1M	8D
Grant	Power Equipment Operators	Loaders (overhead And Front-end, 10 Yds. & Over)	$46.36	7B	1M	8D
Grant	Power Equipment Operators	Locomotive Engineer	$44.39	7B	1M	8D
Grant	Power Equipment Operators	Longitudinal Float	$43.78	7B	1M	8D
Grant	Power Equipment Operators	Master Environmental Maintenance Technician	$45.26	7B	1M	8D
Grant	Power Equipment Operators	Mixer (portable Concrete)	$43.78	7B	1M	8D
Grant	Power Equipment Operators	Mixermobile	$44.39	7B	1M	8D
Grant	Power Equipment Operators	Mobile Crusher Operator (recycle Train)	$44.99	7B	1M	8D
Grant	Power Equipment Operators	Mucking Machine	$44.39	7B	1M	8D
Grant	Power Equipment Operators	Multiple Dozer Units With Single Blade	$44.99	7B	1M	8D
Grant	Power Equipment Operators	Pavement Breaker, Hydra-hammer & Similar	$43.78	7B	1M	8D
Grant	Power Equipment Operators	Paving (dual Drum)	$44.71	7B	1M	8D
Grant	Power Equipment Operators	Paving Machine (asphalt And Concrete)	$44.99	7B	1M	8D
Grant	Power Equipment Operators	Piledriving Engineers	$44.71	7B	1M	8D
Grant	Power Equipment Operators	Plant Oiler	$43.46	7B	1M	8D
Grant	Power Equipment Operators	Posthole Auger Or Punch	$44.39	7B	1M	8D
Grant	Power Equipment Operators	Power Broom	$43.78	7B	1M	8D
Grant	Power Equipment Operators	Pump (grout Or Jet)	$44.39	7B	1M	8D
Grant	Power Equipment Operators	Pumpman	$43.46	7B	1M	8D
Grant	Power Equipment Operators	Quad-track Or Similar Equipment	$44.99	7B	1M	8D
Grant	Power Equipment Operators	Railroad Ballast Regulation Operator (self-propelled)	$43.78	7B	1M	8D
Grant	Power Equipment Operators	Railroad Power Tamper Operator (self-propelled)	$43.78	7B	1M	8D
Grant	Power Equipment Operators		$43.78	7B	1M	8D

INFORMATIONAL COPY ONLY - NOT FOR BIDDING

		Railroad Tamper Jack Operator (self-propelled)				
Grant	Power Equipment Operators	Railroad Track Liner Operator (self-propelled)	$44.71	7B	1M	8D
Grant	Power Equipment Operators	Refrigeration Plant Engineer (1000 Tons & Over)	$44.71	7B	1M	8D
Grant	Power Equipment Operators	Refrigeration Plant Engineer (under 1000 Ton)	$44.55	7B	1M	8D
Grant	Power Equipment Operators	Rollerman (finishing Asphalt Pavement)	$44.99	7B	1M	8D
Grant	Power Equipment Operators	Rollers, All Types On Subgrade, Including Seal And Chip Coating (farm Type, Case, John Deere And Similar,or Compacting Vibrator), Except When Pulled B	$43.46	7B	1M	8D
Grant	Power Equipment Operators	Roto Mill (pavement Grinder)	$44.99	7B	1M	8D
Grant	Power Equipment Operators	Rotomill Groundsman	$44.55	7B	1M	8D
Grant	Power Equipment Operators	Rubber-tired Scrapers (multiple Engine With Three Or More Scrapers)	$45.26	7B	1M	8D
Grant	Power Equipment Operators	Rubber-tired Skidders (r/t With Or Without Attachments)	$44.55	7B	1M	8D
Grant	Power Equipment Operators	Scrapers, All, Rubber-tired	$44.99	7B	1M	8D
Grant	Power Equipment Operators	Screed Operator	$44.99	7B	1M	8D
Grant	Power Equipment Operators	Shovels (3 Yds. & Over)	$45.26	7B	1M	8D
Grant	Power Equipment Operators	Shovels (under 3 Yds.)	$44.99	7B	1M	8D
Grant	Power Equipment Operators	Signalman (whirleys, Highline, Hammerheads Or Similar)	$44.71	7B	1M	8D
Grant	Power Equipment Operators	Soil Stabilizer (p & H Or Similar)	$44.39	7B	1M	8D
Grant	Power Equipment Operators	Spray Curing Machine (concrete)	$43.78	7B	1M	8D
Grant	Power Equipment Operators	Spreader Box (self-propelled)	$43.78	7B	1M	8D
Grant	Power Equipment Operators	Spreader Machine	$44.39	7B	1M	8D
Grant	Power Equipment Operators	Steam Cleaner	$43.46	7B	1M	8D
Grant	Power Equipment Operators	Straddle Buggy (ross & Similar On Construction Job Only)	$43.78	7B	1M	8D
Grant	Power Equipment Operators	Surface Heater & Planer Machine	$44.55	7B	1M	8D
Grant	Power Equipment Operators	Tractor (farm Type R/t With Attachments, Except Backhoe)	$43.78	7B	1M	8D
Grant	Power Equipment Operators	Traverse Finish Machine	$44.39	7B	1M	8D
Grant	Power Equipment Operators	Trenching Machines (7 Ft. Depth & Over)	$44.99	7B	1M	8D
Grant	Power Equipment Operators	Trenching Machines (under 7 Ft. Depth Capacity)	$44.55	7B	1M	8D
Grant	Power Equipment Operators	Tug Boat Operator	$44.99	7B	1M	8D
Grant	Power Equipment Operators	Tugger Operator	$43.78	7B	1M	8D

INFORMATIONAL COPY ONLY - NOT FOR BIDDING

Grant	Power Equipment Operators	Turnhead (with Re-screening)	$44.55	7B	1M	8D
Grant	Power Equipment Operators	Turnhead Operator	$44.39	7B	1M	8D
Grant	Power Equipment Operators	Ultra High Pressure Wateriet Cutting Tool System Operator, (30,000 Psi)	$45.26	7B	1M	8D
Grant	Power Equipment Operators	Vactor Guzzler, Super Sucker	$44.99	7B	1M	8D
Grant	Power Equipment Operators	Vacuum Blasting Machine Operator	$45.26	7B	1M	8D
Grant	Power Equipment Operators	Vacuum Drill (reverse Circulation Drill Under 8" Bit)	$44.55	7B	1M	8D
Grant	Power Equipment Operators	Welding Machine	$43.46	7B	1M	8D
Grant	Power Equipment Operators	Whirleys & Hammerheads, All	$45.26	7B	1M	8D
Grant	Sign Makers & Installers (Non-Electrical)	Journey Level	$14.65		1	
Grant	Truck Drivers	Asphalt Mix Over 20 Yards	$43.40	5D	1V	8M
Grant	Truck Drivers	Asphalt Mix To 20 Yards	$43.23	5D	1V	8M
Grant	Truck Drivers	Dump Truck	$43.23	5D	1V	8M
Grant	Truck Drivers	Dump Truck & Trailer	$43.40	5D	1V	8M
Grant	Truck Drivers	Other Trucks	$43.12	5D	1V	8M

INFORMATIONAL COPY ONLY - NOT FOR BIDDING

****

Overtime Codes

Overtime calculations are based on the hourly rate actually paid to the worker. On public works projects, the hourly rate must be not less than the prevailing rate of wage minus the hourly rate of the cost of fringe benefits actually provided for the worker.

1. ALL HOURS WORKED IN EXCESS OF EIGHT (8) HOURS PER DAY OR FORTY (40) HOURS PER WEEK SHALL BE PAID AT ONE AND ONE-HALF TIMES THE HOURLY RATE OF WAGE.

B. All hours worked on Saturdays shall be paid at one and one-half times the hourly rate of wage. All hours worked on Sundays and holidays shall be paid at double the hourly rate of wage.

C. The first two (2) hours after eight (8) regular hours Monday through Friday and the first ten (10) hours on Saturday shall be paid at one and one-half times the hourly rate of wage. All other overtime hours and all hours worked on Sundays and holidays shall be paid at double the hourly rate of wage.

D. The first two (2) hours before or after a five-eight (8) hour workweek day or a four-ten (10) hour workweek day and the first eight (8) hours worked the next day after either workweek shall be paid at one and one-half times the hourly rate of wage. All additional hours worked and all worked on Sundays and holidays shall be paid at double the hourly rate of wage.

E. The first two (2) hours after eight (8) regular hours Monday through Friday and the first eight (8) hours on Saturday shall be paid at one and one-half times the hourly rate of wage. All other hours worked Monday through Saturday, and all hours worked on Sundays and holidays shall be paid at double the hourly rate of wage.

F. The first two (2) hours after eight (8) regular hours Monday through Friday and the first ten (10) hours on Saturday shall be paid at one and one-half times the hourly rate of wage. All other overtime hours worked, except Labor Day, shall be paid at double the hourly rate of wage. All hours worked on Labor Day shall be paid at three times the hourly rate of wage.

G. The first ten (10) hours worked on Saturdays and the first ten (10) hours worked on a fifth calendar weekday in a four-ten hour schedule, shall be paid at one and one-half times the hourly rate of wage. All hours worked in excess of ten (10) hours per day Monday through Saturday and all hours worked on Sundays and holidays shall be paid at double the hourly rate of wage.

H. All hours worked on Saturdays (except makeup days if work is lost due to inclement weather conditions or equipment breakdown) shall be paid at one and one-half times the hourly rate of wage. All hours worked Monday through Saturday over twelve (12) hours and all hours worked on Sundays and holidays shall be paid at double the hourly rate of wage.

I. All hours worked on Sundays and holidays shall also be paid at double the hourly rate of wage.

J. The first two (2) hours after eight (8) regular hours Monday through Friday and the first ten (10) hours on Saturday shall be paid at one and one-half times the hourly rate of wage. All hours worked over ten (10) hours Monday through Saturday, Sundays and holidays shall be paid at double the hourly rate of wage.

K. All hours worked on Saturdays and Sundays shall be paid at one and one-half times the hourly rate of wage. All hours worked on holidays shall be paid at double the hourly rate of wage.

M. All hours worked on Saturdays (except makeup days if work is lost due to inclement weather conditions) shall be paid at one and one-half times the hourly rate of wage. All hours worked on Sundays and holidays shall be paid at double the hourly rate of wage.

N. All hours worked on Saturdays (except makeup days) shall be paid at one and one-half times the hourly rate of wage. All hours worked on Sundays and holidays shall be paid at double the hourly rate of wage.

INFORMATIONAL COPY ONLY - NOT FOR BIDDING

Overtime Codes Continued

1. O. The first ten (10) hours worked on Saturday shall be paid at one and one-half times the hourly rate of wage. All hours worked on Sundays, holidays and after twelve (12) hours, Monday through Friday and after ten (10) hours on Saturday shall be paid at double the hourly rate of wage.

P. All hours worked on Saturdays (except makeup days if circumstances warrant) and Sundays shall be paid at one and one-half times the hourly rate of wage. All hours worked on holidays shall be paid at double the hourly rate of wage.

Q. The first two (2) hours after eight (8) regular hours Monday through Friday and up to ten (10) hours worked on Saturdays shall be paid at one and one-half times the hourly rate of wage. All hours worked in excess of ten (10) hours per day Monday through Saturday and all hours worked on Sundays and holidays (except Christmas day) shall be paid at double the hourly rate of wage. All hours worked on Christmas day shall be paid at two and one-half times the hourly rate of wage.

R. All hours worked on Sundays and holidays shall be paid at two times the hourly rate of wage.

S. The first two (2) hours after eight (8) regular hours Monday through Friday and the first eight (8) hours on Saturday shall be paid at one and one-half times the hourly rate of wage. All hours worked on holidays and all other overtime hours worked, except Labor Day, shall be paid at double the hourly rate of wage. All hours worked on Labor Day shall be paid at three times the hourly rate of wage.

U. All hours worked on Saturdays shall be paid at one and one-half times the hourly rate of wage. All hours worked on Sundays and holidays (except Labor Day) shall be paid at two times the hourly rate of wage. All hours worked on Labor Day shall be paid at three times the hourly rate of wage.

V. All hours worked on Sundays and holidays (except Thanksgiving Day and Christmas day) shall be paid at one and one-half times the hourly rate of wage. All hours worked on Thanksgiving Day and Christmas day shall be paid at double the hourly rate of wage.

W. All hours worked on Saturdays and Sundays (except make-up days due to conditions beyond the control of the employer)) shall be paid at one and one-half times the hourly rate of wage. All hours worked on holidays shall be paid at double the hourly rate of wage.

X. The first four (4) hours after eight (8) regular hours Monday through Friday and the first twelve (12) hours on Saturday shall be paid at one and one-half times the hourly rate of wage. All hours worked over twelve (12) hours Monday through Saturday, Sundays and holidays shall be paid at double the hourly rate of wage. When holiday falls on Saturday or Sunday, the day before Saturday, Friday, and the day after Sunday, Monday, shall be considered the holiday and all work performed shall be paid at double the hourly rate of wage.

Y. All hours worked outside the hours of 5:00 am and 5:00 pm (or such other hours as may be agreed upon by any employer and the employee) and all hours worked in excess of eight (8) hours per day (10 hours per day for a 4 x 10 workweek) and on Saturdays and holidays (except labor day) shall be paid at one and one-half times the hourly rate of wage. (except for employees who are absent from work without prior approval on a scheduled workday during the workweek shall be paid at the straight-time rate until they have worked 8 hours in a day (10 in a 4 x 10 workweek) or 40 hours during that workweek.) All hours worked Monday through Saturday over twelve (12) hours and all hours worked on Sundays and Labor Day shall be paid at double the hourly rate of wage.

Z. All hours worked on Saturdays and Sundays shall be paid at one and one-half times the hourly rate of wage. All hours worked on holidays shall be paid the straight time rate of pay in addition to holiday pay.

INFORMATIONAL COPY ONLY - NOT FOR BIDDING

Overtime Codes Continued

2. ALL HOURS WORKED IN EXCESS OF EIGHT (8) HOURS PER DAY OR FORTY (40) HOURS PER WEEK SHALL BE PAID AT ONE AND ONE-HALF TIMES THE HOURLY RATE OF WAGE.

B. All hours worked on holidays shall be paid at one and one-half times the hourly rate of wage.

C. All hours worked on Sundays shall be paid at one and one-half times the hourly rate of wage. All hours worked on holidays shall be paid at two times the hourly rate of wage.

F. The first eight (8) hours worked on holidays shall be paid at the straight hourly rate of wage in addition to the holiday pay. All hours worked in excess of eight (8) hours on holidays shall be paid at double the hourly rate of wage.

G. All hours worked on Sunday shall be paid at two times the hourly rate of wage. All hours worked on paid holidays shall be paid at two and one-half times the hourly rate of wage including holiday pay.

H. All hours worked on Sunday shall be paid at two times the hourly rate of wage. All hours worked on holidays shall be paid at one and one-half times the hourly rate of wage.

O. All hours worked on Sundays and holidays shall be paid at one and one-half times the hourly rate of wage.

R. All hours worked on Sundays and holidays and all hours worked over sixty (60) in one week shall be paid at double the hourly rate of wage.

U. All hours worked on Saturdays shall be paid at one and one-half times the hourly rate of wage. All hours worked over 12 hours in a day or on Sundays and holidays shall be paid at double the hourly rate of wage.

W. The first two (2) hours after eight (8) regular hours Monday through Friday and the first eight (8) hours on Saturday shall be paid at one and one-half times the hourly rate of wage. All other hours worked Monday through Saturday, and all hours worked on Sundays and holidays shall be paid at double the hourly rate of wage. On a four-day, ten-hour weekly schedule, either Monday thru Thursday or Tuesday thru Friday schedule, all hours worked after ten shall be paid at double the hourly rate of wage. The first eight (8) hours worked on the fifth day shall be paid at one and one-half times the hourly rate of wage. All other hours worked on the fifth, sixth, and seventh days and on holidays shall be paid at double the hourly rate of wage.

3. ALL HOURS WORKED IN EXCESS OF EIGHT (8) HOURS PER DAY OR FORTY (40) HOURS PER WEEK SHALL BE PAID AT ONE AND ONE-HALF TIMES THE HOURLY RATE OF WAGE.

A. Work performed in excess of eight (8) hours of straight time per day, or ten (10) hours of straight time per day when four ten (10) hour shifts are established, or forty (40) hours of straight time per week, Monday through Friday, or outside the normal shift, and all work on Saturdays shall be paid at time and one-half the straight time rate. Hours worked over twelve hours (12) in a single shift and all work performed after 6:00 pm Saturday to 6:00 am Monday and holidays shall be paid at double the straight time rate of pay. Any shift starting between the hours of 6:00 pm and midnight shall receive an additional one dollar ($1.00) per hour for all hours worked that shift. The employer shall have the sole discretion to assign overtime work to employees. Primary consideration for overtime work shall be given to employees regularly assigned to the work to be performed on overtime situations. After an employee has worked eight (8) hours at an applicable overtime rate, all additional hours shall be at the applicable overtime rate until such time as the employee has had a break of eight (8) hours or more.

C. Work performed in excess of eight (8) hours of straight time per day, or ten (10) hours of straight time per day when four ten (10) hour shifts are established, or forty (40) hours of straight time per week, Monday through Friday, or outside the normal shift, and all work on Saturdays shall be paid at one and one-half times the hourly rate of wage. All work performed after 6:00 pm Saturday to 5:00 am Monday and Holidays shall be paid at double the hourly rate of wage. After an employee has worked eight (8) hours at an applicable overtime rate, all additional hours shall be at the applicable overtime rate until such time as the employee has had a break of eight (8) hours or more.

INFORMATIONAL COPY ONLY - NOT FOR BIDDING

Overtime Codes Continued

3. E. All hours worked Sundays and holidays shall be paid at double the hourly rate of wage. Each week, once 40 hours of straight time work is achieved, then any hours worked over 10 hours per day Monday through Saturday shall be paid at double the hourly wage rate.

F. All hours worked on Saturday shall be paid at one and one-half times the hourly rate of wage. All hours worked on Sunday shall be paid at two times the hourly rate of wage. All hours worked on paid holidays shall be paid at two and one-half times the hourly rate of wage including holiday pay.

H. All work performed on Sundays between March 16th and October 14th and all Holidays shall be compensated for at two (2) times the regular rate of pay. Work performed on Sundays between October 15th and March 15th shall be compensated at one and one half (1-1/2) times the regular rate of pay.

I. All hours worked on Saturdays shall be paid at one and one-half times the hourly rate of wage. In the event the job is down due to weather conditions during a five day work week (Monday through Friday,) or a four day-ten hour work week (Tuesday through Friday,) then Saturday may be worked as a voluntary make-up day at the straight time rate. However, Saturday shall not be utilized as a make-up day when a holiday falls on Friday. All hours worked Monday through Saturday over twelve (12) hours and all hours worked on Sundays and holidays shall be paid at double the hourly rate of wage.

J. All hours worked between the hours of 10:00 pm and 5:00 am, Monday through Friday, and all hours worked on Saturdays shall be paid at a one and one-half times the hourly rate of wage. All hours worked on Sundays and holidays shall be paid at double the hourly rate of wage.

4. ALL HOURS WORKED IN EXCESS OF EIGHT (8) HOURS PER DAY OR FORTY (40) HOURS PER WEEK SHALL BE PAID AT ONE AND ONE-HALF TIMES THE HOURLY RATE OF WAGE.

A. All hours worked in excess of eight (8) hours per day or forty (40) hours per week shall be paid at double the hourly rate of wage. All hours worked on Saturdays, Sundays and holidays shall be paid at double the hourly rate of wage.

B. All hours worked over twelve (12) hours per day and all hours worked on holidays shall be paid at double the hourly rate of wage.

C. On Monday through Friday, the first four (4) hours of overtime after eight (8) hours of straight time work shall be paid at one and one half (1-1/2) times the straight time rate of pay, unless a four (4) day ten (10) hour workweek has been established. On a four (4) day ten (10) hour workweek scheduled Monday through Thursday, or Tuesday through Friday, the first two (2) hours of overtime after ten (10) hours of straight time work shall be paid at one and one half (1-1/2) times the straight time rate of pay. On Saturday, the first twelve (12) hours of work shall be paid at one and one half (1-1/2) times the straight time rate of pay, except that if the job is down on Monday through Friday due to weather conditions or other conditions outside the control of the employer, the first ten (10) hours on Saturday may be worked at the straight time rate of pay. All hours worked over twelve (12) hours in a day and all hours worked on Sunday and Holidays shall be paid at two (2) times the straight time rate of pay.

INFORMATIONAL COPY ONLY - NOT FOR BIDDING

Overtime Codes Continued

4. D. All hours worked in excess of eight (8) hours per day or forty (40) hours per week shall be paid at double the hourly rate of wage. All hours worked on Saturday, Sundays and holidays shall be paid at double the hourly rate of pay. Rates include all members of the assigned crew.

EXCEPTION:
On all multipole structures and steel transmission lines, switching stations, regulating, capacitor stations, generating plants, industrial plants, associated installations and substations, except those substations whose primary function is to feed a distribution system, will be paid overtime under the following rates:

The first two (2) hours after eight (8) regular hours Monday through Friday of overtime on a regular workday, shall be paid at one and one-half times the hourly rate of wage. All hours in excess of ten (10) hours will be at two (2) times the hourly rate of wage. The first eight (8) hours worked on Saturday will be paid at one and one-half (1-1/2) times the hourly rate of wage. All hours worked in excess of eight (8) hours on Saturday, and all hours worked on Sundays and holidays will be at the double the hourly rate of wage.

All overtime eligible hours performed on the above described work that is energized, shall be paid at the double the hourly rate of wage.

E. The first two (2) hours after eight (8) regular hours Monday through Friday and the first eight (8) hours on Saturday shall be paid at one and one-half times the hourly rate of wage. All other hours worked Monday through Saturday, and all hours worked on Sundays and holidays shall be paid at double the hourly rate of wage.

On a four-day, ten-hour weekly schedule, either Monday thru Thursday or Tuesday thru Friday schedule, all hours worked after ten shall be paid at double the hourly rate of wage. The Monday or Friday not utilized in the normal four-day, ten hour work week, and Saturday shall be paid at one and one half (1½) times the regular shift rate for the first eight (8) hours. All other hours worked Monday through Saturday, and all hours worked on Sundays and holidays shall be paid at double the hourly rate of wage.

F. All hours worked between the hours of 6:00 pm and 6:00 am, Monday through Saturday, shall be paid at a premium rate of 20% over the hourly rate of wage. All hours worked on Sundays shall be paid at one and one-half times the hourly rate of wage. All hours worked on holidays shall be paid at double the hourly rate of wage.

G. All hours worked on Saturdays shall be paid at one and one-half times the hourly rate of wage. All hours worked Monday through Saturday over twelve (12) hours and all hours worked on Sundays and holidays shall be paid at double the hourly rate of wage.

H. The first two (2) hours after eight (8) regular hours Monday through Friday and the first eight (8) hours on Saturday shall be paid at one and one-half times the hourly rate of wage. All other overtime hours worked, except Labor Day, and all hours on Sunday shall be paid at double the hourly rate of wage. All hours worked on Labor Day shall be paid at three times the hourly rate of wage.

I. The first eight (8) hours worked on Saturdays shall be paid at one and one-half times the hourly rate of wage. All hours worked in excess of eight (8) per day on Saturdays shall be paid at double the hourly rate of wage. All hours worked on Sundays and holidays shall be paid at double the hourly rate of wage.

J. The first eight (8) hours worked on a Saturday shall be paid at one and one-half times the hourly rate of wage. All hours worked in excess of eight (8) hours on a Saturday shall be paid at double the hourly rate of wage. All hours worked over twelve (12) in a day, and all hours worked on Sundays and Holidays shall be paid at double the hourly rate of wage.

K. All hours worked on a Saturday shall be paid at one and one-half times the hourly rate of wage, so long as Saturday is the sixth consecutive day worked. All hours worked over twelve (12) in a day Monday through Saturday, and all hours worked on Sundays and Holidays shall be paid at double the hourly rate of wage.

INFORMATIONAL COPY ONLY - NOT FOR BIDDING

4. L. The first twelve (12) hours worked on a Saturday shall be paid at one and one-half times the hourly rate of wage. All hours worked on a Saturday in excess of twelve (12) hours shall be paid at double the hourly rate of pay. All hours worked over twelve (12) in a day Monday through Friday, and all hours worked on Sundays shall be paid at double the hourly rate of wage. All hours worked on a holiday shall be paid at one and one-half times the hourly rate of wage, except that all hours worked on Labor Day shall be paid at double the hourly rate of pay.

M. All hours worked on Sunday and Holidays shall be paid at double the hourly rate. Any employee reporting to work less than nine (9) hours from their previous quitting time shall be paid for such time at time and one-half times the hourly rate.

N. All hours worked on Saturdays shall be paid at one and one-half times the hourly rate of wage. All hours worked on Sundays and holidays, and all work performed between the hours of midnight (12:00 AM) and eight AM (8:00 AM) every day shall be paid at double the hourly rate of wage.

O. All hours worked between midnight Friday to midnight Sunday shall be paid at one and one half the hourly rate of wage. After an employee has worked in excess of eight (8) continuous hours in any one or more calendar days, all additional hours shall be at the applicable overtime rate until such time as the employee has had a break of six (6) hours or more. All hours worked on Holidays shall be paid at double the hourly rate of wage.

P. All hours worked on Holidays shall be paid at one and one-half times the hourly rate of wage.

Q. The first four (4) hours after eight (8) regular hours Monday through Friday and the first eight (8) hours on Saturday shall be paid at one and one-half times the hourly rate of wage. All hours worked over twelve (12) hours Monday through Saturday shall be paid at double the hourly rate. All hours worked on Sundays and holidays shall be paid at double the hourly rate of wage.

R. All hours worked on Saturdays shall be paid at one and one-half times the hourly rate of wage, so long as Saturday is the sixth consecutive day worked. All hours worked on Sundays and holidays shall be paid at double the hourly rate of wage.

R. Placeholder

INFORMATIONAL COPY ONLY - NOT FOR BIDDING

Holiday Codes

5. A. Holidays: New Year's Day, Memorial Day, Independence Day, Labor Day, Thanksgiving Day, Friday after Thanksgiving Day, and Christmas Day (7).

B. Holidays: New Year's Day, Memorial Day, Independence Day, Labor Day, Thanksgiving Day, Friday after Thanksgiving Day, the day before Christmas, and Christmas Day (8).

C. Holidays: New Year's Day, Presidents' Day, Memorial Day, Independence Day, Labor Day, Thanksgiving Day, the Friday after Thanksgiving Day, And Christmas Day (8).

Holiday Codes Continued

5. D. Holidays: New Year's Day, Memorial Day, Independence Day, Labor Day, Thanksgiving Day, the Friday and Saturday after Thanksgiving Day, And Christmas Day (8).

H. Holidays: New Year's Day, Memorial Day, Independence Day, Thanksgiving Day, the Day after Thanksgiving Day, And Christmas (6).

5. I. Holidays: New Year's Day, Memorial Day, Independence Day, Labor Day, Thanksgiving Day, and Christmas Day (6).

J. Holidays: New Year's Day, Memorial Day, Independence Day, Thanksgiving Day, Friday after Thanksgiving Day, Christmas Eve Day, And Christmas Day (7).

K. Holidays: New Year's Day, Presidents' Day, Memorial Day, Independence Day, Labor Day, Thanksgiving Day, Friday After Thanksgiving Day, The Day Before Christmas, And Christmas Day (9).

L. Holidays: New Year's Day, Martin Luther King Jr. Day, Memorial Day, Independence Day, Labor Day, Thanksgiving Day, Friday after Thanksgiving Day, And Christmas Day (8).

N. Holidays: New Year's Day, Presidents' Day, Memorial Day, Independence Day, Labor Day, Veterans' Day, Thanksgiving Day, The Friday After Thanksgiving Day, And Christmas Day (9).

P. Holidays: New Year's Day, Memorial Day, Independence Day, Labor Day, Thanksgiving Day, Friday And Saturday After Thanksgiving Day, The Day Before Christmas, And Christmas Day (9). If A Holiday Falls On Sunday, The Following Monday Shall Be Considered As A Holiday.

Q. Paid Holidays: New Year's Day, Memorial Day, Independence Day, Labor Day, Thanksgiving Day, and Christmas Day (6).

R. Paid Holidays: New Year's Day, Memorial Day, Independence Day, Labor Day, Thanksgiving Day, Day After Thanksgiving Day, One-Half Day Before Christmas Day, And Christmas Day. (7 1/2).

S. Paid Holidays: New Year's Day, Presidents' Day, Memorial Day, Independence Day, Labor Day, Thanksgiving Day, And Christmas Day (7).

T. Paid Holidays: New Year's Day, Washington's Birthday, Memorial Day, Independence Day, Labor Day, Thanksgiving Day, The Friday After Thanksgiving Day, Christmas Day, And The Day Before Or After Christmas (9).

Z. Holidays: New Year's Day, Memorial Day, Independence Day, Labor Day, Veterans Day, Thanksgiving Day, the Friday after Thanksgiving Day, And Christmas Day (8).

6. A. Paid Holidays: New Year's Day, Presidents' Day, Memorial Day, Independence Day, Labor Day, Thanksgiving Day, the Friday after Thanksgiving Day, And Christmas Day (8).

E. Paid Holidays: New Year's Day, Day Before Or After New Year's Day, Presidents Day, Memorial Day, Independence Day, Labor Day, Thanksgiving Day, the Friday after Thanksgiving Day, Christmas Day, and a Half-Day On Christmas Eve Day. (9 1/2).

G. Paid Holidays: New Year's Day, Martin Luther King Jr. Day, Presidents' Day, Memorial Day, Independence Day, Labor Day, Veterans' Day, Thanksgiving Day, the Friday after Thanksgiving Day, Christmas Day, and Christmas Eve Day (11).

H. Paid Holidays: New Year's Day, New Year's Eve Day, Memorial Day, Independence Day, Labor Day, Thanksgiving Day, Friday After Thanksgiving Day, Christmas Day, The Day After Christmas, And A Floating Holiday (10).

I. Paid Holidays: New Year's Day, Memorial Day, Independence Day, Labor Day, Thanksgiving Day, Friday After Thanksgiving Day, And Christmas Day (7).

INFORMATIONAL COPY ONLY - NOT FOR BIDDING

Holiday Codes Continued

6. T. Paid Holidays: New Year's Day, Presidents' Day, Memorial Day, Independence Day, Labor Day, Thanksgiving Day, The Friday After Thanksgiving Day, The Last Working Day Before Christmas Day, And Christmas Day (9).

Z. Holidays: New Year's Day, Memorial Day, Independence Day, Labor Day, Thanksgiving Day, Friday after Thanksgiving Day, And Christmas Day (7). If a holiday falls on Saturday, the preceding Friday shall be considered as the holiday. If a holiday falls on Sunday, the following Monday shall be considered as the holiday.

7. A. Holidays: New Year's Day, Memorial Day, Independence Day, Labor Day, Thanksgiving Day, the Friday and Saturday after Thanksgiving Day, And Christmas Day (8). Any Holiday Which Falls On A Sunday Shall Be Observed As A Holiday On The Following Monday. If any of the listed holidays falls on a Saturday, the preceding Friday shall be a regular work day.

B. Holidays: New Year's Day, Memorial Day, Independence Day, Labor Day, Thanksgiving Day, the Friday and Saturday after Thanksgiving Day, And Christmas Day (8). Any holiday which falls on a Sunday shall be observed as a holiday on the following Monday. Any holiday which falls on a Saturday shall be observed as a holiday on the preceding Friday.

C. Holidays: New Year's Day, Martin Luther King Jr. Day, Memorial Day, Independence Day, Labor Day, Thanksgiving Day, the Friday after Thanksgiving Day, And Christmas Day (8). Any holiday which falls on a Sunday shall be observed as a holiday on the following Monday. Any holiday which falls on a Saturday shall be observed as a holiday on the preceding Friday.

D. Paid Holidays: New Year's Day, Memorial Day, Independence Day, Labor Day, Veteran's Day, Thanksgiving Day, the Friday after Thanksgiving Day, And Christmas Day (8). Unpaid Holidays: President's Day. Any paid holiday which falls on a Sunday shall be observed as a holiday on the following Monday. Any paid holiday which falls on a Saturday shall be observed as a holiday on the preceding Friday.

E. Holidays: New Year's Day, Memorial Day, Independence Day, Labor Day, Thanksgiving Day, the Friday after Thanksgiving Day, And Christmas Day (7). Any holiday which falls on a Sunday shall be observed as a holiday on the following Monday. Any holiday which falls on a Saturday shall be observed as a holiday on the preceding Friday.

F. Holidays: New Year's Day, Memorial Day, Independence Day, Labor Day, Thanksgiving Day, the Friday after Thanksgiving Day, the last working day before Christmas day and Christmas day (8). Any holiday which falls on a Sunday shall be observed as a holiday on the following Monday. Any holiday which falls on a Saturday shall be observed as a holiday on the preceding Friday.

G. Holidays: New Year's Day, Memorial Day, Independence Day, Labor Day, Thanksgiving Day, and Christmas Day (6). Any holiday which falls on a Sunday shall be observed as a holiday on the following Monday.

H. Holidays: New Year's Day, Martin Luther King Jr. Day, Independence Day, Memorial Day, Labor Day, Thanksgiving Day, the Friday after Thanksgiving Day, the Last Working Day before Christmas Day and Christmas Day (9). Any holiday which falls on a Sunday shall be observed as a holiday on the following Monday. Any holiday which falls on a Saturday shall be observed as a holiday on the preceding Friday.

INFORMATIONAL COPY ONLY - NOT FOR BIDDING

Holiday Codes Continued

I. Holidays: New Year's Day, President's Day, Independence Day, Memorial Day, Labor Day, Thanksgiving Day, The Friday After Thanksgiving Day, The Day Before Christmas Day And Christmas Day (9). Any holiday which falls on a Sunday shall be observed as a holiday on the following Monday. Any holiday which falls on a Saturday shall be

observed as a holiday on the preceding Friday.

7. J. Holidays: New Year's Day, Independence Day, Memorial Day, Labor Day, Thanksgiving Day and Christmas Day (6). Any holiday which falls on a Sunday shall be observed as a holiday on the following Monday. Any holiday which falls on a Saturday shall be observed as a holiday on the preceding Friday.

K. Holidays: New Year's Day, Memorial Day, Independence Day, Thanksgiving Day, the Friday and Saturday after Thanksgiving Day, And Christmas Day (8). Any holiday which falls on a Sunday shall be observed as a holiday on the following Monday. Any holiday which falls on a Saturday shall be observed as a holiday on the preceding Friday.

L. Holidays: New Year's Day, Memorial Day, Labor Day, Independence Day, Thanksgiving Day, the Last Work Day before Christmas Day, And Christmas Day (7). Any holiday which falls on a Sunday shall be observed as a holiday on the following Monday. Any holiday which falls on a Saturday shall be observed as a holiday on the preceding Friday.

M. Paid Holidays: New Year's Day, The Day after or before New Year's Day, President's Day, Memorial Day, Independence Day, Labor Day, Thanksgiving Day, the Friday after Thanksgiving Day, Christmas Day, And the Day after or before Christmas Day (10). Any holiday which falls on a Sunday shall be observed as a holiday on the following Monday. Any holiday which falls on a Saturday shall be observed as a holiday on the preceding Friday.

N. Holidays: New Year's Day, Memorial Day, Independence Day, Labor Day, Thanksgiving Day, the Friday after Thanksgiving Day, And Christmas Day (7). Any holiday which falls on a Sunday shall be observed as a holiday on the following Monday. When Christmas falls on a Saturday, the preceding Friday shall be observed as a holiday.

P. Holidays: New Year's Day, Memorial Day, Independence Day, Labor Day, Thanksgiving Day, Friday after Thanksgiving Day, And Christmas Day (7). Any holiday which falls on a Sunday shall be observed as a holiday on the following Monday.

Q. Holidays: New Year's Day, Memorial Day, Independence Day, Labor Day, Thanksgiving Day, the Friday after Thanksgiving Day, the Last Working Day before Christmas Day and Christmas Day (8). Any holiday which falls on a Sunday shall be observed as a holiday on the following Monday. If any of the listed holidays falls on a Saturday, the preceding Friday shall be a regular work day.

R. Paid Holidays: New Year's Day, the day after or before New Year's Day, President's Day, Memorial Day, Independence Day, Labor Day, Thanksgiving Day, the Friday after Thanksgiving Day, Christmas Day, and the day after or before Christmas Day (10). If any of the listed holidays fall on Saturday, the preceding Friday shall be observed as the holiday. If any of the listed holidays falls on a Sunday, the day observed by the Nation shall be considered a holiday and compensated accordingly.

S. Paid Holidays: New Year's Day, Memorial Day, Independence Day, Labor Day, Thanksgiving Day, Friday after Thanksgiving Day, Christmas Day, the Day after Christmas, and A Floating Holiday (9). If any of the listed holidays falls on a Sunday, the day observed by the Nation shall be considered a holiday and compensated accordingly.

T. Paid Holidays: New Year's Day, the Day after or before New Year's Day, President's Day, Memorial Day, Independence Day, Labor Day, Thanksgiving Day, the Friday after Thanksgiving Day, Christmas Day, and The Day after or before Christmas Day. (10). If any of the listed holidays falls on a Sunday, the day observed by the Nation shall be considered a holiday and compensated accordingly. Any holiday which falls on a Saturday shall be observed as a holiday on the preceding Friday.

V. Holidays: New Year's Day, President's Birthday, Memorial Day, Independence Day, Labor Day, Thanksgiving Day, the Friday after Thanksgiving Day, Christmas Day, the day before or after Christmas, and the day before or after New Year's Day. If any of the above listed holidays falls on a Sunday, the day observed by the Nation shall be considered a holiday and compensated accordingly.

INFORMATIONAL COPY ONLY - NOT FOR BIDDING

Holiday Codes Continued

7. W. Holidays: New Year's Day, Day After New Year's, Memorial Day, Independence Day, Labor Day, Thanksgiving Day, the Friday after Thanksgiving Day, Christmas Eve Day, Christmas Day, the day after Christmas, the day before New Year's Day, and a Floating Holiday.

X. Holidays: New Year's Day, Day before or after New Year's Day, Presidents' Day, Memorial Day, Independence Day, Labor Day, Thanksgiving Day, the Friday after Thanksgiving Day, Christmas Day, and the day before or after Christmas day. If a holiday falls on a Saturday or on a Friday that is the normal day off, then the holiday will be taken on the last normal workday. If the holiday falls on a Monday that is the normal day off or on a Sunday, then the holiday will be taken on the next normal workday.

Y. Holidays: New Year's Day, Presidents' Day, Memorial Day, Independence Day, Labor Day, Thanksgiving Day, the Friday after Thanksgiving Day, and Christmas Day. (8) If the holiday falls on a Sunday, then the day observed by the federal government shall be considered a holiday and compensated accordingly.

Z. Holidays: New Year's Day, President's Day, Independence Day, Memorial Day, Labor Day, Thanksgiving Day, The Friday After Thanksgiving Day, And Christmas Day (8). Any holiday which falls on a Sunday shall be observed as a holiday on the following Monday. Any holiday which falls on a Saturday shall be observed as a holiday on the preceding Friday.

15. A. Holidays: New Year's Day, Memorial Day, Independence Day, Labor Day, Thanksgiving Day, the Friday after Thanksgiving Day, the day before Christmas Day and Christmas Day. (8) Any holiday which falls on a Sunday shall be observed as a holiday on the following Monday.

B. Holidays: New Year's Day, Martin Luther King Jr. Day, President's Day, Memorial Day, Independence Day, Labor Day, Veteran's Day, Thanksgiving Day, and Christmas Day. (9)

C. Holidays: New Year's Day, Memorial Day, Independence Day, Labor Day, Thanksgiving Day, the Friday after Thanksgiving Day, the day before Christmas Day and Christmas Day. (8)

D Holidays: New Year's Day, Presidents' Day, Memorial Day, Independence Day, Labor Day, Thanksgiving Day, Friday after Thanksgiving Day, Christmas Day, and the day after Christmas.

Note Codes

8. D. Workers working with supplied air on hazmat projects receive an additional $1.00 per hour.

L. Workers on hazmat projects receive additional hourly premiums as follows -Level A: $0.75, Level B: $0.50, And Level C: $0.25.

M. Workers on hazmat projects receive additional hourly premiums as follows: Levels A & B: $1.00, Levels C & D: $0.50.

N. Workers on hazmat projects receive additional hourly premiums as follows -Level A: $1.00, Level B: $0.75, Level C: $0.50, And Level D: $0.25.

INFORMATIONAL COPY ONLY - NOT FOR BIDDING

Note Codes Continued

8. P. Workers on hazmat projects receive additional hourly premiums as follows -Class A Suit: $2.00, Class B Suit: $1.50, Class C Suit: $1.00, And Class D Suit $0.50.

Q. The highest pressure registered on the gauge for an accumulated time of more than fifteen (15) minutes during the shift shall be used in determining the scale paid.

R. Effective August 31, 2012 – A Traffic Control Supervisor shall be present on the project whenever flagging or spotting or other traffic control labor is being utilized. A Traffic Control Laborer performs the setup, maintenance and removal of all temporary traffic control devices and construction signs necessary to control vehicular, bicycle, and pedestrian traffic during construction operations. Flaggers and Spotters shall be posted where shown on approved Traffic Control Plans or where directed by the Engineer. All flaggers and spotters shall possess a current flagging card issued by the State of Washington, Oregon, Montana, or Idaho. These classifications are only effective on or after August 31, 2012.

S. Effective August 31, 2012 – A Traffic Control Supervisor shall be present on the project whenever flagging or spotting or other traffic control labor is being utilized. Flaggers and Spotters shall be posted where shown on approved Traffic Control Plans or where directed by the Engineer. All flaggers and spotters shall possess a current flagging card issued by the State of Washington, Oregon, Montana, or Idaho. This classification is only effective on or after August 31, 2012.

T. Effective August 31, 2012 – A Traffic Control Laborer performs the setup, maintenance and removal of all temporary traffic control devices and construction signs necessary to control vehicular, bicycle, and pedestrian traffic during construction operations. Flaggers and Spotters shall be posted where shown on approved Traffic Control Plans or where directed by the Engineer. All flaggers and spotters shall possess a current flagging card issued by the State of Washington, Oregon, Montana, or Idaho. This classification is only effective on or after August 31, 2012.

U. Workers on hazmat projects receive additional hourly premiums as follows – Class A Suit: $2.00, Class B Suit: $1.50, And Class C Suit: $1.00. Workers performing underground work receive an additional $0.40 per hour for any and all work performed underground, including operating, servicing and repairing of equipment. The premium for underground work shall be paid for the entire shift worked. Workers who work suspended by a rope or cable receive an additional $0.50 per hour. The premium for work suspended shall be paid for the entire shift worked. Workers who do "pioneer" work (break open a cut, build road, etc.) more than one hundred fifty (150) feet above grade elevation receive an additional $0.50 per hour.

V. In addition to the hourly wage and fringe benefits, the following depth and enclosure premiums shall be paid. The premiums are to be calculated for the maximum depth and distance into an enclosure that a diver reaches in a day. The premiums are to be paid one time for the day and are not used in calculating overtime pay.

Depth premiums apply to depths of fifty feet or more. Over 50' to 100' - $2.00 per foot for each foot over 50 feet. Over 101' to 150' - $3.00 per foot for each foot over 101 feet. Over 151' to 220' - $4.00 per foot for each foot over 220 feet. Over 221' - $5.00 per foot for each foot over 221 feet.

Enclosure premiums apply when divers enter enclosures (such as pipes or tunnels) where there is no vertical ascent and is measured by the distance travelled from the entrance. 25' to 300' - $1.00 per foot from entrance. 300' to 600' - $1.50 per foot beginning at 300'. Over 600' - $2.00 per foot beginning at 600'.

W. Meter Installers work on single phase 120/240V self-contained residential meters. The Lineman/Groundmen rates would apply to meters not fitting this description.

INFORMATIONAL COPY ONLY - NOT FOR BIDDING

Washington State Department of Labor and Industries
Policy Statement
(Regarding the Production of "Standard" or "Non-standard" Items)

Below is the department's (State L&I's) list of criteria to be used in determining whether a prefabricated item is "standard" or "non-standard". For items not appearing on WSDOT's predetermined list, these criteria shall be used by the Contractor (and the Contractor's subcontractors, agents to subcontractors, suppliers, manufacturers, and fabricators) to determine coverage under RCW 39.12. The production, in the State of Washington, of non-standard items is covered by RCW 39.12, and the production of standard items is not. The production of any item outside the State of Washington is not covered by RCW 39.12.

1. Is the item fabricated for a public works project? If not, it is not subject to RCW 39.12. If it is, go to question 2.

2. Is the item fabricated on the public works jobsite? If it is, the work is covered under RCW 39.12. If not, go to question 3.

3. Is the item fabricated in an assembly/fabrication plant set up for, and dedicated primarily to, the public works project? If it is, the work is covered by RCW 39.12. If not, go to question 4.

4. Does the item require any assembly, cutting, modification or other fabrication by the supplier? If not, the work is not covered by RCW 39.12. If yes, go to question 5.

5. Is the prefabricated item intended for the public works project typically an inventory item which could reasonably be sold on the general market? If not, the work is covered by RCW 39.12. If yes, go to question 6.

6. Does the specific prefabricated item, generally defined as standard, have any unusual characteristics such as shape, type of material, strength requirements, finish, etc? If yes, the work is covered under RCW 39.12.

Any firm with questions regarding the policy, WSDOT's Predetermined List, or for determinations of covered and non-covered workers shall be directed to State L&I at (360) 902-5330.

INFORMATIONAL COPY ONLY - NOT FOR BIDDING

WSDOT's
Predetermined List for
Suppliers - Manufactures - Fabricator

Below is a list of potentially prefabricated items, originally furnished by WSDOT to Washington State Department of Labor and Industries, that may be considered non-standard and therefore covered by the prevailing wage law, RCW 39.12. Items marked with an X in the "YES" column should be considered to be non-standard and therefore covered by RCW 39.12. Items marked with an X in the "NO" column should be considered to be standard and therefore not covered. Of course, exceptions to this general list may occur, and in that case shall be evaluated according to the criteria described in State and L&I's policy statement.

	ITEM DESCRIPTION	YES	NO
1.	Metal rectangular frames, solid metal covers, herringbone grates, and bi-directional vaned grates for Catch Basin Types 1, 1L, 1P, and 2 and Concrete Inlets. See Std. Plans		X
2.	Metal circular frames (rings) and covers, circular grates, and prefabricated ladders for Manhole Types 1, 2, and 3, Drywell Types 1, 2, and 3 and Catch Basin Type 2. See Std. Plans		X
3.	Prefabricated steel grate supports and welded grates, metal frames and dual vaned grates, and Type 1, 2, and 3 structural tubing grates for Drop Inlets. See Std. Plans.		X
4.	Concrete Pipe - Plain Concrete pipe and reinforced concrete pipe Class 2 to 5 sizes smaller than 60 inch diameter.		X
5.	Concrete Pipe - Plain Concrete pipe and reinforced concrete pipe Class 2 to 5 sizes larger than 60 inch diameter.		X
6.	Corrugated Steel Pipe - Steel lock seam corrugated pipe for culverts and storm sewers, sizes 30 inch to 120 inches in diameter. May also be treated, 1 thru 5.		X
7.	Corrugated Aluminum Pipe - Aluminum lock seam corrugated pipe for culverts and storm sewers, sizes 30 inch to 120 inches in diameter. May also be treated, #5.		X

INFORMATIONAL COPY ONLY NOT FOR BIDDING

	ITEM DESCRIPTION	YES	NO
8.	Anchor Bolts & Nuts - Anchor Bolts and Nuts, for mounting sign structures, luminaries and other items, shall be made from commercial bolt stock. See Contract Plans and Std. Plans for size and material type.		X
9.	Aluminum Pedestrian Handrail - Pedestrian handrail conforming to the type and material specifications set forth in the contract plans. Welding of aluminum shall be in accordance with Section 9-28.14(3).	X	
10.	Major Structural Steel Fabrication - Fabrication of major steel items such as trusses, beams, girders, etc., for bridges.	X	
11.	Minor Structural Steel Fabrication - Fabrication of minor steel Items such as special hangers, brackets, access doors for structures, access ladders for irrigation boxes, bridge expansion joint systems, etc., involving welding, cutting, punching and/or boring of holes. See Contact Plans for item description and shop drawings.	X	
12.	Aluminum Bridge Railing Type BP - Metal bridge railing conforming to the type and material specifications set forth in the Contract Plans. Welding of aluminum shall be in accordance with Section 9-28.14(3).		X
13.	Concrete Piling--Precast-Prestressed concrete piling for use as 55 and 70 ton concrete piling. Concrete to conform to Section 9-19.1 of Std. Spec..	X	
14.	Precast Manhole Types 1, 2, and 3 with cones, adjustment sections and flat top slabs. See Std. Plans.		X
15.	Precast Drywell Types 1, 2, and with cones and adjustment Sections. See Std. Plans.		X
16.	Precast Catch Basin - Catch Basin type 1, 1L, 1P, and 2 With adjustment sections. See Std. Plans.		X

INFORMATIONAL COPY ONLY - NOT FOR BIDDING

ITEM DESCRIPTION	YES	NO
17. Precast Concrete Inlet - with adjustment sections, See Std. Plans		X
18. Precast Drop Inlet Type 1 and 2 with metal grate supports. See Std. Plans.		X
19. Precast Grate Inlet Type 2 with extension and top units. See Std. Plans		X
20. Metal frames, vaned grates, and hoods for Combination Inlets. See Std. Plans		X
21. Precast Concrete Utility Vaults - Precast Concrete utility vaults of various sizes. Used for in ground storage of utility facilities and controls. See Contract Plans for size and construction requirements. Shop drawings are to be provided for approval prior to casting		X
22. Vault Risers - For use with Valve Vaults and Utilities X Vaults.		X
23. Valve Vault - For use with underground utilities. See Contract Plans for details.		X
24. Precast Concrete Barrier - Precast Concrete Barrier for use as new barrier or may also be used as Temporary Concrete Barrier. Only new state approved barrier may be used as permanent barrier.		X
25. Reinforced Earth Wall Panels – Reinforced Earth Wall Panels in size and shape as shown in the Plans. Fabrication plant has annual approval for methods and materials to be used. See Shop Drawing. Fabrication at other locations may be approved, after facilities inspection, contact HQ. Lab.	X	
26. Precast Concrete Walls - Precast Concrete Walls - tilt-up wall panel in size and shape as shown in Plans. Fabrication plant has annual approval for methods and materials to be used	X	

INFORMATIONAL COPY ONLY-NOT FOR BIDDING

	ITEM DESCRIPTION	YES	NO
27.	Precast Railroad Crossings - Concrete Crossing Structure Slabs.	X	
28.	12, 18 and 26 inch Standard Precast Prestressed Girder – Standard Precast Prestressed Girder for use in structures. Fabricator plant has annual approval of methods and materials to be used. Shop Drawing to be provided for approval prior to casting girders. See Std. Spec. Section 6-02.3(25)A	X	
29.	Prestressed Concrete Girder Series 4-14 - Prestressed Concrete Girders for use in structures. Fabricator plant has annual approval of methods and materials to be used. Shop Drawing to be provided for approval prior to casting girders. See Std. Spec. Section 6-02.3(25)A .	X	
30.	Prestressed Tri-Beam Girder - Prestressed Tri-Beam Girders for use in structures. Fabricator plant has annual approval of methods and materials to be used. Shop Drawing to be provided for approval prior to casting girders. See Std. Spec. Section 6-02.3(25)A	X	
31.	Prestressed Precast Hollow-Core Slab – Precast Prestressed Hollow-core slab for use in structures. Fabricator plant has annual approval of methods and materials to be used. Shop Drawing to be provided for approval prior to casting girders. See Std. Spec. Section 6-02.3(25)A.	X	
32.	Prestressed-Bulb Tee Girder - Bulb Tee Prestressed Girder for use in structures. Fabricator plant has annual approval of methods and materials to be used. Shop Drawing to be provided for approval prior to casting girders. See Std. Spec. Section 6-02.3(25)A	X	
33.	Monument Case and Cover See Std. Plan.		X

INFORMATIONAL COPY ONLY - NOT FOR BIDDING

	ITEM DESCRIPTION	YES	NO
34.	Cantilever Sign Structure - Cantilever Sign Structure fabricated from steel tubing meeting AASHTO-M-183. See Std. Plans, and Contract Plans for details. The steel structure shall be galvanized after fabrication in accordance with AASHTO-M-111.	X	
35.	Mono-tube Sign Structures - Mono-tube Sign Bridge fabricated to details shown in the Plans. Shop drawings for approval are required prior to fabrication.	X	
36.	Steel Sign Bridges - Steel Sign Bridges fabricated from steel tubing meeting AASHTO-M-138 for Aluminum Alloys. See Std. Plans, and Contract Plans for details. The steel structure shall be galvanized after fabrication in accordance with AASHTO-M-111.	X	
37.	Steel Sign Post - Fabricated Steel Sign Posts as detailed in Std Plans. Shop drawings for approval are to be provided prior to fabrication		X
38.	Light Standard-Prestressed - Spun, prestressed, hollow concrete poles.	X	
39.	Light Standards - Lighting Standards for use on highway illumination systems, poles to be fabricated to conform with methods and materials as specified on Std. Plans. See Specia Provisions for pre-approved drawings.	X	
40.	Traffic Signal Standards - Traffic Signal Standards for use on highway and/or street signal systems. Standards to be fabricated to conform with methods and material as specified on Std. Plans. See Special Provisions for pre-approved drawings	X	
41.	Precast Concrete Sloped Mountable Curb (Single and DualFaced) See Std. Plans.		X

INFORMATIONAL COPY ONLY - NOT FOR BIDDING

ITEM DESCRIPTION	YES	NO
42. Traffic Signs - Prior to approval of a Fabricator of Traffic Signs, the sources of the following materials must be submitted and approved for reflective sheeting, legend material, and aluminum sheeting. **NOTE:** *** Fabrication inspection required. Only signs tagged "Fabrication Approved" by WSDOT Sign Fabrication Inspector to be installed	X	X
	Custom Message	Std Signing Message
43. Cutting & bending reinforcing steel		X
44. Guardrail components	X	X
	Custom End Sec	Standard Sec
45. Aggregates/Concrete mixes	Covered by WAC 296-127-018	
46. Asphalt	Covered by WAC 296-127-018	
47. Fiber fabrics		X
48. Electrical wiring/components		X
49. treated or untreated timber pile		X
50. Girder pads (elastomeric bearing)	X	
51. Standard Dimension lumber		X
52. Irrigation components		X

INFORMATIONAL COPY ONLY - NOT FOR BIDDING

ITEM DESCRIPTION	YES	NO
53. Fencing materials		X
54. Guide Posts		X
55. Traffic Buttons		X
56. Epoxy		X
57. Cribbing		X
58. Water distribution materials		X
59. Steel "H" piles		X
60. Steel pipe for concrete pile casings		X
61. Steel pile tips, standard		X
62. Steel pile tips, custom	X	

Prefabricated items specifically produced for public works projects that are prefabricated in a county other than the county wherein the public works project is to be completed, the wage for the offsite prefabrication shall be the applicable prevailing wage for the county in which the actual prefabrication takes place.

It is the manufacturer of the prefabricated product to verify that the correct county wage rates are applied to work they perform.

See RCW 39.12.010
(The definition of "locality" in RCW 39.12.010(2) contains the phrase "wherein the physical work is being performed." The department interprets this phrase to mean the actual work site.

INFORMATIONAL COPY ONLY - NOT FOR BIDDING

WSDOT's List of State Occupations not applicable to Heavy and Highway Construction Projects

This project is subject to the state hourly minimum rates for wages and fringe benefits in the contract provisions, as provided by the state Department of Labor and Industries.
The following list of occupations, is comprised of those occupations that are not normally used in the construction of heavy and highway projects.
When considering job classifications for use and / or payment when bidding on, or building heavy and highway construction projects for, or administered by WSDOT, these Occupations will be excepted from the included "Washington State Prevailing Wage Rates For Public Work Contracts" documents.

- Building Service Employees
- Electrical Fixture Maintenance Workers
- Electricians - Motor Shop
- Heating Equipment Mechanics
- Industrial Engine and Machine Mechanics
- Industrial Power Vacuum Cleaners
- Inspection, Cleaning, Sealing of Water Systems by Remote Control
- Laborers - Underground Sewer & Water
- Machinists (Hydroelectric Site Work)
- Modular Buildings
- Playground & Park Equipment Installers
- Power Equipment Operators - Underground Sewer & Water
- Residential *** ALL ASSOCIATED RATES ***
- Sign Makers and Installers (Non-Electrical)
- Sign Makers and Installers (Electrical)
- Stage Rigging Mechanics (Non Structural)

The following occupations may be used only as outlined in the preceding text concerning "WSDOT's list for Suppliers - Manufacturers - Fabricators"

- Fabricated Precast Concrete Products
- Metal Fabrication (In Shop)

Definitions for the Scope of Work for prevailing wages may be found at the Washington State Department of Labor and Industries web site and in WAC Chapter 296-127.

INFORMATIONAL COPY ONLY - NOT FOR BIDDING

Washington State Department of Labor and Industries
Policy Statements
(Regarding Production and Delivery of Gravel, Concrete, Asphalt, etc.)

WAC 296-127-018 Agency filings affecting this section

Coverage and exemptions of workers involved in the production and delivery of gravel, concrete, asphalt, or similar materials.

(1) The materials covered under this section include but are not limited to: Sand, gravel, crushed rock, concrete, asphalt, or other similar materials.

(2) All workers, regardless of by whom employed, are subject to the provisions of chapter 39.12 RCW when they perform any or all of the following functions:

(a) They deliver or discharge any of the above-listed materials to a public works project site:

(i) At one or more point(s) directly upon the location where the material will be incorporated into the project; or

(ii) At multiple points at the project; or

(iii) Adjacent to the location and coordinated with the incorporation of those materials.

(b) They wait at or near a public works project site to perform any tasks subject to this section of the rule.

(c) They remove any materials from a public works construction site pursuant to contract requirements or specifications (e.g., excavated materials, materials from demolished structures, clean-up materials, etc.).

(d) They work in a materials production facility (e.g., batch plant, borrow pit, rock quarry, etc.,) which is established for a public works project for the specific, but not necessarily exclusive, purpose of supplying materials for the project.

(e) They deliver concrete to a public works site regardless of the method of incorporation.

(f) They assist or participate in the incorporation of any materials into the public works project.

INFORMATIONAL COPY ONLY - NOT FOR BIDDING

(3) All travel time that relates to the work covered under subsection (2) of this section requires the payment of prevailing wages. Travel time includes time spent waiting to load, loading, transporting, waiting to unload, and delivering materials. Travel time would include all time spent in travel in support of a public works project whether the vehicle is empty or full. For example, travel time spent returning to a supply source to obtain another load of material for use on a public works site or returning to the public works site to obtain another load of excavated material is time spent in travel that is subject to prevailing wage. Travel to a supply source, including travel from a public works site, to obtain materials for use on a private project would not be travel subject to the prevailing wage.

(4) Workers are not subject to the provisions of chapter 39.12 RCW when they deliver materials to a stockpile.

(a) A "stockpile" is defined as materials delivered to a pile located away from the site of incorporation such that the stockpiled materials must be physically moved from the stockpile and transported to another location on the project site in order to be incorporated into the project.

(b) A stockpile does not include any of the functions described in subsection (2)(a) through (f) of this section; nor does a stockpile include materials delivered or distributed to multiple locations upon the project site; nor does a stockpile include materials dumped at the place of incorporation, or adjacent to the location and coordinated with the incorporation.

(5) The applicable prevailing wage rate shall be determined by the locality in which the work is performed. Workers subject to subsection (2)(d) of this section, who produce such materials at an off-site facility shall be paid the applicable prevailing wage rates for the county in which the off-site facility is located. Workers subject to subsection (2) of this section, who deliver such materials to a public works project site shall be paid the applicable prevailing wage rates for the county in which the public works project is located.

[Statutory Authority: Chapter 39.12 RCW, RCW 43.22.051 and 43.22.270. 08-24-101, § 296-127-018, filed 12/2/08, effective 1/2/09. Statutory Authority: Chapters 39.04 and 39.12 RCW and RCW 43.22.270. 92-01-104 and 92-08-101, § 296-127-018, filed 12/18/91 and 4/1/92, effective 8/31/92.]

INFORMATIONAL COPY ONLY-NOT FOR BIDDING

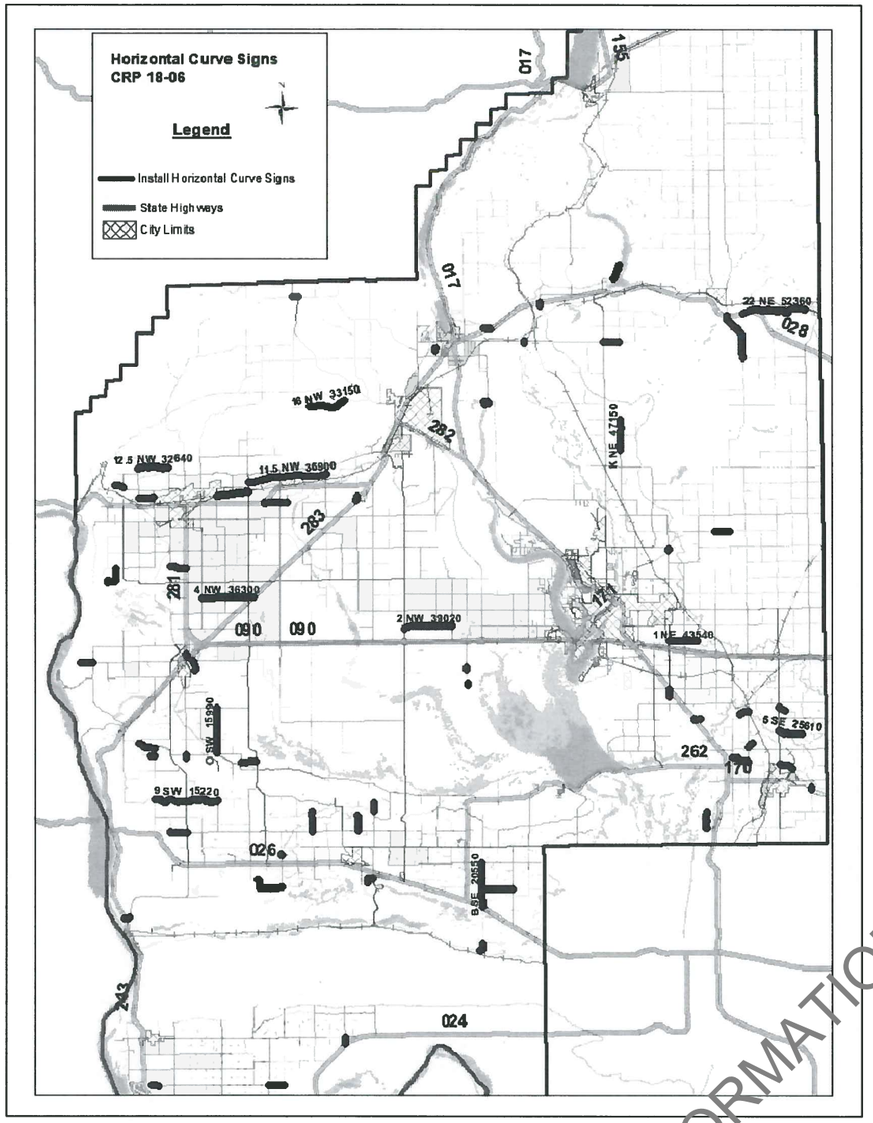

VICINITY MAP

CRP 18–06
HORIZONTAL CURVE SIGNS
PHASE 3

(Various County Roads)

Contract No. TA–6458

INFORMATIONAL COPY ONLY-NOT FOR BIDDING

INDEX

SHEET NO.	PLAN REFERENCE NO.	TITLE
1	IV1	INDEX, VICINITY MAP, LEGEND
2	SQ1	SUMMARY OF QUANTITIES
3–19	QT1–QT17	QUANTITY TAB./LOCATIONS – PAVED ROADS
20–23	QT18–QT21	QUANTITY TAB./LOCATIONS – GRAVEL ROADS
24	TCP	TRAFFIC CONTROL PLAN

Grant County
Board of Commissioners
Richard Stevens, District #1
Tom Taylor, District # 2 (Chair)
Cindy Carter, District #3

General Notes

1. Call 811 a minimum of two business days before you dig.

TIME					COUNTY NO. 13	STATE WASH	FED.AID PROJ.NO.	
DATE								
PLOTTED BY	S. Dart				PROGRAM NUMBER		HSIP–000S(502)	
DESIGNED BY	S. Dart							
ENTERED BY	S. Dart							
CHECKED BY	J. Tincher						ROAD LOG NUMBER	
PROJ. ENGR.	B. Bersanti							
COUNTY ENGINEER	J. Tincher	REVISION	DATE	BY			VARIOUS	

JEFFREY C. TINCHER, STATE OF WASHINGTON, 22336, REGISTERED PROFESSIONAL ENGINEER — 1/23/19 — DATE — P.E. STAMP BOX

Grant County
Public Works Department
124 Enterprise St. SE
Ephrata, WA 98823
(509) 754–6082

CRP 18–06
HORIZONTAL CURVE SIGNS
PHASE 3

INDEX, VICINITY MAP, LEGEND

PLAN REF NO IV1

SHEET 1 OF 24 SHEETS

SUMMARY OF QUANTITIES

ITEM No.	TOTAL QUANTITY	UNIT	ITEM	CRP 18-06 VARIOUS COUNTY ROAD LOCATIONS
			PREPARATION	
1	1	L.S.	Mobilization	L.S.
2	1	L.S.	Notification	L.S.
			TRAFFIC	
3	53	EA	Remove Existing Warning Sign & Post	53
4	11	EA	I7-701 Primitive Road No Warning Sign with Sign Support Type ST-2	11
5	151	EA	30" Warning Sign with Steel Sign Support Type ST-2	151
6	10	EA	W1-6, Large Arrow 48"x24" with Steel Sign Support Type ST-2	10
7	1	EA	W1-7, Double Large Arrow 48"x24" with Steel Sign Support Type ST-2	1
8	1124	EA	W1-8, Chevron 18"x24" with Steel Sign Support Type ST-2	1124
9	144	EA	W13-1P, Speed Plaque	144
10	1	L.S.	Project Temporary Traffic Control	L.S.
			OTHER ITEMS	
11	1	L.S.	Spill Prevention, Control, and Countermeasure (SPCC) Plan	L.S.
12	-1	CALC.	Minor Changes	-1

INFORMATIONAL COPY ONLY- NOT FOR BIDDING

TIME				
DATE				
PLOTTED BY	S. Dart			
DESIGNED BY	S. Dart			
ENTERED BY	S. Dart			
CHECKED BY	J. Tincher			
PROJ. ENGR.	B. Bersanti			
COUNTY ENGINEER	J. Tincher	REVISION	DATE	BY

COUNTY NO.	STATE	FED. AID PROJ. NO.
13	WASH	HSIP-000S(502)
PROGRAM NUMBER		ROAD LOG NUMBER: VARIOUS

JEFFREY C. TINCHER, STATE OF WASHINGTON, 22338, REGISTERED PROFESSIONAL ENGINEER

1/23/19 DATE

P.E. STAMP BOX

Grant County
Public Works Department
124 Enterprise St. SE
Ephrata, WA 98823
(509) 754-6082

CRP 18-06
HORIZONTAL CURVE SIGNS
PHASE 3
SUMMARY OF QUANTITIES

PLAN REF NO SQ1

SHEET 2 OF 24 SHEETS

CRP 18-06 Horizontal Curve Signs Phase 3 (Does Not Include Gravel Roads)

Road Name	Road Log #	Begin Mile Post	End Mile Post	Remove Existing Sign At Mile Post (Does Not Include Gravel Roads)	Item 3 Existing Sign Code	PC Mile Post	PT Mile Post	Proposed Advisory Speed	Advance Placement Distance	Chevron Spacing - Adjusted to Fit Curve	Proposed Sign Location - Increasing Mile Post	Proposed Sign Location - Decreasing Mile Post	Item 3 Remove Existing Signs & Post	Item 5 W1-1, Turn 30"x30"	W1-2L, Curve 30"x30"	W1-2R, Curve 30"x30"	W1-3L, Reverse Turn 30"x30"	Item 7 W1-7, Double Large Arrow 48"x24"	Item 8 W1-8, Chevron 18"x24"	Item 9 W13-1P,24"x24" 15 MPH	W13-1P,24"x24" 25 MPH	W13-1P,24"x24" 35 MPH	* Comments / Notes
G-SW	10510	0.000	0.460																				
						0.010	0.050	25	175	71	N/A	0.083		1					6		1		25 MPH, No increasing sign due to intersection
Beverly Burke WY	11400	0.000	0.360																				
						0.152	0.222	35	125	93	0.128	0.246			1	1			8			2	35 MPH
K-SW	12010	1.430	1.490																				
				1.295	W1-3L/W 13-1P								1										
				1.495	W1-7								1										
						1.495	1.540	15	200	N/A		1.578					1			1			15 MPH
											1.490							1					Arrow install North side of intersection
				1.661	W1-3L/W 13-1P								1										
											Total This Sheet		3	1	1	1	1	1	14	1	1	2	

INFORMATIONAL COPY ONLY - NOT FOR BIDDING

TIME			
DATE			
PLOTTED BY	S. Dart		
DESIGNED BY	S. Dart		
ENTERED BY	S. Dart		
CHECKED BY	J. Tincher		
PROJ. ENGR.	B. Bersanti		
COUNTY ENGINEER	J. Tincher	REVISION	DATE / BY

COUNTY NO.	STATE
13	WASH

PROGRAM NUMBER

FED.AID PROJ.NO.
HSIP-000S(502)

ROAD LOG NUMBER
VARIOUS

JEFFREY C. TINCHER, STATE OF WASHINGTON, 42538, REGISTERED PROFESSIONAL ENGINEER
1/23/19
DATE
P.E. STAMP BOX

Grant County
Public Works Department
124 Enterprise St. SE
Ephrata, WA 98823
(509) 754-6082

CRP 18-06
HORIZONTAL CURVE SIGNS
PHASE 3

QUANTITY TAB./LOCATIONS

PLAN REF NO
QT1

SHEET 3 OF 24 SHEETS

CRP 18-06 Horizontal Curve Signs Phase 3 (Does Not Include Gravel Roads)

Road Name	Road Log #	Begin Mile Post	End Mile Post	PC Mile Post	PT Mile Post	Proposed Advisory Speed	Advance Placement Distance	Chevron Spacing - Adjusted to Fit Curve	Proposed Sign Location - Increasing Mile Post	Proposed Sign Location - Decreasing Mile Post	Item 5 W1-1L, Turn 30"x30"	Item 5 W1-1R, Turn 30"x30"	Item 5 W1-2L, Curve 30"x30"	Item 5 W1-2R, Curve 30"x30"	Item 8 W1-8, Chevron 18"x24"	Item 9 W13-1P,24"x24" 30 MPH	Item 9 W13-1P,24"x24" 35 MPH	Item 9 W13-1P,24"x24" 40 MPH	* Comments / Notes
5.5-SW	15060	0.000	1.070																
				0.062	0.108	30	125	61	0.038	0.132	1	1			8	2			30 MPH
				0.520	0.590	35	125	93	0.496	0.614			1	1	8		2		35 MPH
				1.028	1.062	35	125	90	1.004	1.086			1		4		1		35 MPH
6-SW	15080	0.000	0.300																
				0.045	0.077	30	125	57	0.021	0.101	1	1			6	2			30 MPH
				0.235	0.275	40	100	106	0.216	0.294			1	1	4			2	40 MPH
									Total This Sheet		2	2	3	2	30	4	3	2	

INFORMATIONAL COPY ONLY - NOT FOR BIDDING

TIME			
DATE			
PLOTTED BY	S. Dart		
DESIGNED BY	S. Dart		
ENTERED BY	S. Dart		
CHECKED BY	J. Tincher		
PROJ. ENGR.	B. Bersanti		
COUNTY ENGINEER	J. Tincher	REVISION	DATE / BY

COUNTY NO. 13 | STATE WASH | PROGRAM NUMBER

FED.AID PROJ.NO. HSIP-000S(502)

ROAD LOG NUMBER VARIOUS

JEFFREY C. TINCHER, 42538, REGISTERED PROFESSIONAL ENGINEER — 1/23/19 — DATE — P.E. STAMP BOX

Grant County
Public Works Department
124 Enterprise St. SE
Ephrata, WA 98823
(509) 754-6082

CRP 18-06
HORIZONTAL CURVE SIGNS
PHASE 3

QUANTITY TAB./LOCATIONS

PLAN REF NO QT2

SHEET 4 OF 24 SHEETS

CRP 18-06 Horizontal Curve Signs Phase 3 (Does Not Include Gravel Roads)

Road Name	Road Log #	Begin Mile Post	End Mile Post	Remove Existing Sign At Mile Post (Does Not Include Gravel Roads)	Existing Sign Code	PC Mile Post	PT Mile Post	Proposed Advisory Speed	Advance Placement Distance	Chevron Spacing - Adjusted to Fit Curve	Proposed Sign Location - Increasing Mile Post	Proposed Sign Location - Decreasing Mile Post	Item 3 Remove Existing Signs & Post	Item 5 W1-1L, Turn 30"x30"	Item 5 W1-1R, Turn 30"x30"	Item 5 W1-2R, Curve 30"x30"	Item 6 W1-6, Large Arrow 48"x24"	Item 8 W1-8, Chevron 18"x24"	Item 9 W13-1P,24"x24" 15 MPH	Item 9 W13-1P,24"x24" 30 MPH	* Comments / Notes
6/M.5/6.5-SW	15990	0.000	1.000																		
				0.855	W1-1R/W13-1P								1								
						0.985	1.015	15	200	N/A	0.947	1.053		1	1				2		15 MPH
											1.000						2				Inspector field place arrows as needed
				1.141	W1-1L/W13-1P								1								
				1.388	W1-1L/W13-1P																
						1.485	1.513	15	200	N/A	1.447	1.551		1	1				2		15 MPH
											1.500						2				Inspector field place arrows as needed
				1.649	W1-1R/W13-1P								1								
				2.764	W1-2R/W13-1P								1								
						2.880	2.918	30	125	67	2.856	2.942		1	1			6		2	30 MPH
				2.971	W1-2L/W13-1P								1								
O-SW	15990	3.020	5.950																		
				3.091	W1-2R/W13-1P								1								
						3.025	3.058	30	125	59	N/A	3.082				1		6		1	Increasing MP sign install near PC speed limit on that sign
											Total This Sheet		6	3	3	1	4	12	4	3	

INFORMATIONAL COPY ONLY - NOT FOR BIDDING

TIME			
DATE			
PLOTTED BY	S. Dart		
DESIGNED BY	S. Dart		
ENTERED BY	S. Dart		
CHECKED BY	J. Tincher		
PROJ. ENGR.	B. Bersanti		
COUNTY ENGINEER	J. Tincher	REVISION	DATE / BY

COUNTY NO. 13 | STATE WASH | PROGRAM NUMBER

FED.AID PROJ.NO. HSIP-000S(502)

ROAD LOG NUMBER VARIOUS

JEFFREY C. TINCHER, STATE OF WASHINGTON, 42338, REGISTERED PROFESSIONAL ENGINEER — 1/23/19 DATE — P.E. STAMP BOX

Grant County Public Works Department
124 Enterprise St. SE
Ephrata, WA 98823
(509) 754-6082

CRP 18-06
HORIZONTAL CURVE SIGNS
PHASE 3

QUANTITY TAB./LOCATIONS

PLAN REF NO QT3

SHEET 5 OF 24 SHEETS

CRP 18-06 Horizontal Curve Signs Phase 3 (Does Not Include Gravel Roads)

Road Name	Road Log #	Begin Mile Post	End Mile Post	PC Mile Post	PT Mile Post	Proposed Advisory Speed	Advance Placement Distance	Chevron Spacing - Adjusted to Fit Curve	Proposed Sign Location - Increasing Mile Post	Proposed Sign Location - Decreasing Mile Post	Item 5 W1-1L, Turn 30"x30"	Item 5 W1-2L, Curve 30"x30"	Item 5 W1-2R, Curve 30"x30"	Item 5 W1-3L, Reverse Turn 30"x30"	Item 5 W1-3R, Reverse Turn 30"x30"	Item 8 W1-8, Chevron 18"x24"	Item 9 W13-1P,24"x24" 20 MPH	Item 9 W13-1P,24"x24" 30 MPH	Item 9 W13-1P,24"x24" 35 MPH	* Comments / Notes
P.5-SW	16610	0.000	0.770																	
				0.535	0.678	35	100	108	0.516	0.697		1	1			14			2	35 MPH
				0.725	0.770	30	125	80	0.701	N/A	1					6		1		30 MPH/No Decreasing
B-SE	20550	2.900	5.780																	
				2.911	2.931	20	N/A	53	N/A	N/A						4				No Advanced Sign due to Intersection
				2.945	2.971	20	175	70		3.004				1		4	1			20 MPH
4-SE	22300	0.000	0.420																	
				0.026	0.048			59								4				No warning signs only chevrons
				0.063	0.095	35	125	85	0.039			1				4			1	35 MPH
										0.119					1				1	35 MPH
									Total This Sheet		1	2	1	1	1	36	1	1	4	

INFORMATIONAL COPY ONLY - NOT FOR BIDDING

TIME				
DATE				
PLOTTED BY	S. Dart			
DESIGNED BY	S. Dart			
ENTERED BY	S. Dart			
CHECKED BY	J. Tincher			
PROJ. ENGR.	B. Bersanti			
COUNTY ENGINEER	J. Tincher	REVISION	DATE	BY

COUNTY NO.	STATE	FED. AID PROJ. NO.
13	WASH	HSIP-000S(502)
PROGRAM NUMBER		ROAD LOG NUMBER: VARIOUS

JEFFREY C. TINCHER, STATE OF WASHINGTON, 22538, REGISTERED PROFESSIONAL ENGINEER — 1/23/19 — DATE — P.E. STAMP BOX

Grant County
Public Works Department
124 Enterprise St. SE
Ephrata, WA 98823
(509) 754-6082

CRP 18-06
HORIZONTAL CURVE SIGNS
PHASE 3

QUANTITY TAB./LOCATIONS

PLAN REF NO QT4

SHEET 6 OF 24 SHEETS

CRP 18-06 Horizontal Curve Signs Phase 3 (Does Not Include Gravel Roads)

													Item 3	Item 5					Item 8	Item 9			
Road Name	Road Log #	Begin Mile Post	End Mile Post	Remove Existing Sign At Mile Post (Does Not Include Gravel Roads)	Existing Sign Code	PC Mile Post	PT Mile Post	Proposed Advisory Speed	Advance Placement Distance	Chevron Spacing - Adjusted to Fit Curve	Proposed Sign Location - Increasing Mile Post	Proposed Sign Location - Decreasing Mile Post	Remove Existing Signs & Post	W1-1L, Turn 30"x30"	W1-1R, Turn 30"x30"	W1-2L, Curve 30"x30"	W1-2R, Curve 30"x30"	W1-3R, Reverse Turn 30"x30"	W1-8, Chevron 18"x24"	W13-1P,24"x24" 25 MPH	W13-1P,24"x24" 30 MPH	W13-1P,24"x24" 35 MPH	* Comments / Notes
6.5-SE	22440	0.000	1.080																				
						0.263	0.326	30	125	67	0.239	0.350		1	1				10		2		30 MPH
						0.546	0.611	35	125	114	0.522	0.635				1	1		6			2	35 MPH
						0.975	1.023	30	125	63	0.896							1	8		1		30 MPH
						1.040	1.069			77									4				Chevrons only
3.5-SE	22600	0.000	0.530																				
						0.228	0.265	35	175	93	0.195	0.298				1	1		4			2	35 MPH
				0.442	W1-1L/W1 3-1p								1										
						0.504	0.564	25	175	68	0.467	0.597		1	1				8	2			25 MPH
											Total This Sheet		1	2	2	2	2	1	40	2	3	4	

INFORMATIONAL COPY ONLY - NOT FOR BIDDING

TIME				
DATE				
PLOTTED BY	S. Dart			
DESIGNED BY	S. Dart			
ENTERED BY	S. Dart			
CHECKED BY	J. Tincher			
PROJ. ENGR.	B. Bersanti			
COUNTY ENGINEER	J. Tincher	REVISION	DATE	BY

COUNTY NO.	STATE	FED. AID PROJ. NO.
13	WASH	HSIP-000S(502)
PROGRAM NUMBER		ROAD LOG NUMBER
		VARIOUS

JEFFREY C. TINCHER, STATE OF WASHINGTON, 42338, REGISTERED PROFESSIONAL ENGINEER
1/23/19
DATE
P.E. STAMP BOX

Grant County
Public Works Department
124 Enterprise St. SE
Ephrata, WA 98823
(509) 754-6082

CRP 18-06
HORIZONTAL CURVE SIGNS
PHASE 3

QUANTITY TAB./LOCATIONS

PLAN REF NO
QT5

SHEET 7 OF 24 SHEETS

CRP 18-06 Horizontal Curve Signs Phase 3 (Does Not Include Gravel Roads)

Road Name	Road Log #	Begin Mile Post	End Mile Post	Remove Existing Sign At Mile Post (Does Not Include Gravel Roads)	Existing Sign Code	PC Mile Post	PT Mile Post	Proposed Advisory Speed	Advance Placement Distance	Chevron Spacing - Adjusted to Fit Curve	Proposed Sign Location - Increasing Mile Post	Proposed Sign Location - Decreasing Mile Post	Item 3	Item 5						Item 8	Item 9	
													Remove Existing Signs & Post	W1-1AL, Turn 30"x30"	W1-1L, Turn 30"x30"	W1-1R, Turn 30"x30"	W1-2R, Curve 30"x30"	W1-5L, Winding Road 30"x30"	W1-5R, Winding Road 30"x30"	W1-8, Chevron 18"x24"	W13-1P,24"x24" 20 MPH	* Comments / Notes
P.5-SE	22600	9.980	11.000																			
				9.915	W1-5R/W13-1P								1									
						9.972	10.000	20	100	74	9.953								1	4	1	20 MPH
						10.055	10.084	20		77										4		
						10.099	10.140	20		73		10.159						1		6	1	20 MPH
						10.502	10.540	20	100	66	10.483	10.559			1	1				6	2	20 MPH
				10.837	W1-5L/W13-1P								1									
5.7-SE	22790	0.000	0.370																			
						0.013	0.038			72										4		Chevrons only
W-SE	24560	0.000	0.130																			
						0.008	0.031	20	175	61	0.008	0.064		1			1			4	1	20 MPH on W1-1A & 1 Plaque
											Total This Sheet		2	1	1	1	1	1	1	28	5	

INFORMATIONAL COPY ONLY - NOT FOR BIDDING

TIME			
DATE			
PLOTTED BY	S. Dart		
DESIGNED BY	S. Dart		
ENTERED BY	S. Dart		
CHECKED BY	J. Tincher		
PROJ. ENGR.	B. Bersanti		
COUNTY ENGINEER	J. Tincher	REVISION	DATE / BY

COUNTY NO.	STATE
13	WASH

PROGRAM NUMBER

FED.AID PROJ.NO.
HSIP-000S(502)

ROAD LOG NUMBER
VARIOUS

JEFFREY C. TINCHER, STATE OF WASHINGTON, 22536, REGISTERED PROFESSIONAL ENGINEER
1/23/19
DATE
P.E. STAMP BOX

Grant County
Public Works Department
124 Enterprise St. SE
Ephrata, WA 98823
(509) 754-6082

CRP 18-06
HORIZONTAL CURVE SIGNS
PHASE 3

QUANTITY TAB./LOCATIONS

PLAN REF NO
QT6

SHEET 8 OF 24 SHEETS

CRP 18-06 Horizontal Curve Signs Phase 3 (Does Not Include Gravel Roads)

Road Name	Road Log #	Begin Mile Post	End Mile Post	Remove Existing Sign At Mile Post (Does Not Include Gravel Roads)	Existing Sign Code	PC Mile Post	PT Mile Post	Proposed Advisory Speed	Advance Placement Distance	Chevron Spacing - Adjusted to Fit Curve	Proposed Sign Location - Increasing Mile Post	Proposed Sign Location - Decreasing Mile Post	Item 3	Item 5					Item 8	Item 9			* Comments / Notes
													Remove Existing Signs & Post	W1-1AR, Turn 30"x30"	W1-1L, Turn 30"x30"	W1-1R, Turn 30"x30"	W1-2L, Curve 30"x30"	W1-3R, Reverse Turn 30"x30"	W1-8, Chevron 18"x24"	W13-1P,24"x24" 20 MPH	W13-1P,24"x24" 30 MPH	W13-1P,24"x24" 35 MPH	
5-SE	25610	0.000	1.410																				
						0.012	0.023	20	175	29	0.012	0.056		1			1		4	1			20 MPH on W1-1A & 1 Plaque
				0.235	W1-2L/W13-1P								1										
						0.286	0.367	30	125	72	0.262	0.391			1	1			12		2		30 MPH
				0.432	W1-2R/W13-1P								1										
				0.478	W1-4R/W13-1P								1										
						0.518	0.581	35	125	111	0.494							1	6			1	35 MPH
						0.612	0.688	35	125	101		0.712						1	8			1	35 MPH
				0.737	W1-4R/W13-1P								1										
3.3-SE	26210	2.000	2.500																				
						1.920	1.961	30	125	73	1.896	1.985			1	1			6		2		30 MPH
						2.400	2.444	30	125	79	2.376	2.626			1	1			6		2		30 MPH
											Total This Sheet		4	1	3	3	1	2	42	1	6	2	

INFORMATIONAL COPY ONLY - NOT FOR BIDDING

TIME			
DATE			
PLOTTED BY	S. Dart		
DESIGNED BY	S. Dart		
ENTERED BY	S. Dart		
CHECKED BY	J. Tincher		
PROJ. ENGR.	B. Bersanti		
COUNTY ENGINEER	J. Tincher	REVISION	DATE / BY

COUNTY NO.	STATE	FED. AID PROJ. NO.
13	WASH	HSIP-000S(502)
PROGRAM NUMBER		ROAD LOG NUMBER
		VARIOUS

JEFFREY C. TINCHER, STATE OF WASHINGTON, 42336, REGISTERED PROFESSIONAL ENGINEER
1/23/19
DATE
P.E. STAMP BOX

Grant County
Public Works Department
124 Enterprise St. SE
Ephrata, WA 98823
(509) 754-6082

CRP 18-06
HORIZONTAL CURVE SIGNS
PHASE 3

QUANTITY TAB./LOCATIONS

PLAN REF NO QT7

SHEET 9 OF 24 SHEETS

CRP 18-06 Horizontal Curve Signs Phase 3 (Does Not Include Gravel Roads)

											Item 5				Item 6	Item 8	Item 9				
Road Name	Road Log #	Begin Mile Post	End Mile Post	PC Mile Post	PT Mile Post	Proposed Advisory Speed	Advance Placement Distance	Chevron Spacing - Adjusted to Fit Curve	Proposed Sign Location - Increasing Mile Post	Proposed Sign Location - Decreasing Mile Post	W1-1L, Turn 30"x30"	W1-1R, Turn 30"x30"	W1-2L, Curve 30"x30"	W1-2R, Curve 30"x30"	W1-6, Large Arrow 48"x24"	W1-8, Chevron 18"x24"	W13-1P,24"x24" 10 MPH	W13-1P,24"x24" 30 MPH	W13-1P,24"x24" 35 MPH	W13-1P,24"x24" 40 MPH	* Comments / Notes
Q-NW	31101	0.000	0.250																		
				0.014	0.034	15	200	N/A	N/A	0.054	1										15 MPH, No increasing sign
									0.014	0.016					2						Inspector field placement may be needed
6-NW	31500	0.000	1.060																		
				0.061	0.106	40	100	119	0.043	0.125			1	1		4				2	40 MPH
				0.505	0.545	35	125	106	0.481	0.569			1	1		4			2		35 MPH
				0.732	0.770	30	125	67	0.708	0.794	1	1				6		2			30 MPH
				1.033	1.061	10	200	N/A	0.995	1.099	1	1					2				10 MPH
									1.050						2						Inspector field place arrows
									Total This Sheet		3	2	2	2	4	14	2	2	2	2	

INFORMATIONAL COPY ONLY - NOT FOR BIDDING

TIME	
DATE	
PLOTTED BY	S. Dart
DESIGNED BY	S. Dart
ENTERED BY	S. Dart
CHECKED BY	J. Tincher
PROJ. ENGR.	B. Bersanti
COUNTY ENGINEER	J. Tincher

REVISION	DATE	BY

COUNTY NO.	STATE
13	WASH

PROGRAM NUMBER

FED.AID PROJ.NO.
HSIP-000S(502)

ROAD LOG NUMBER
VARIOUS

JEFFREY C. TINCHER, STATE OF WASHINGTON, 42338, REGISTERED PROFESSIONAL ENGINEER
1/23/19
DATE
P.E. STAMP BOX

Grant County
Public Works Department
124 Enterprise St. SE
Ephrata, WA 98823
(509) 754-6082

CRP 18-06
HORIZONTAL CURVE SIGNS
PHASE 3

QUANTITY TAB./LOCATIONS

PLAN REF NO
QT8

SHEET 10 OF 24 SHEETS

CRP 18-06 Horizontal Curve Signs Phase 3 (Does Not Include Gravel Roads)

Road Name	Road Log #	Begin Mile Post	End Mile Post	PC Mile Post	PT Mile Post	Proposed Advisory Speed	Advance Placement Distance	Chevron Spacing - Adjusted to Fit Curve	Proposed Sign Location - Increasing Mile Post	Proposed Sign Location - Decreasing Mile Post	Item 5								Item 8	Item 9					* Comments / Notes
											W1-1L, Turn 30"x30"	W1-1R, Turn 30"x30"	W1-2L, Curve 30"x30"	W1-2R, Curve 30"x30"	W1-3L, Reverse Turn 30"x30"	W1-3R, Reverse Turn 30"x30"	W1-5L, Winding Road 30"x30"	W1-5R, Winding Road 30"x30"	W1-8, Chevron 18"x24"	W13-1P,24"x24" 15 MPH	W13-1P,24"x24" 25 MPH	W13-1P,24"x24" 30 MPH	W13-1P,24"x24" 35 MPH	W13-1P,24"x24" 40 MPH	
U.5-NW	31610	0.000	1.450																						
				0.745	0.800	25	175	73	0.712									1	8		1				25 MPH
				0.820	0.845	25		66											4						
				0.860	0.910	25	175	66		0.943							1		8		1				25 MPH
				1.030	1.060	30	125	79	1.006	1.084	1	1							4			2			30 MPH
				1.235	1.270	15	200	37	1.197						1				10	1					15 MPH
				1.283	1.330	15	200	35		1.368						1			14	1					15 MPH
				1.375	1.423	25	175	63	1.342	1.456	1	1							8		2				25 MPH
11.2-NW	32200	0.000	0.540																						
				0.105	0.150	35	140	119	0.081	0.176			1	1					4				2		35 MPH
				0.265	0.295	40	100	79	0.246	0.314			1	1					4					2	40 MPH
									Total This Sheet		2	2	2	2	1	1	1	1	64	2	4	2	2	2	

INFORMATIONAL COPY ONLY - NOT FOR BIDDING

TIME					
DATE					
PLOTTED BY	S. Dart				
DESIGNED BY	S. Dart				
ENTERED BY	S. Dart				
CHECKED BY	J. Tincher				
PROJ. ENGR.	B. Bersanti				
COUNTY ENGINEER	J. Tincher	REVISION	DATE	BY	

COUNTY NO.	STATE
13	WASH

PROGRAM NUMBER

FED. AID PROJ. NO.
HSIP-000S(502)

ROAD LOG NUMBER
VARIOUS

JEFFREY C. TINCHER, STATE OF WASHINGTON, 42538, REGISTERED PROFESSIONAL ENGINEER
1/23/19
DATE
P.E. STAMP BOX

Grant County
Public Works Department
124 Enterprise St. SE
Ephrata, WA 98823
(509) 754-6082

CRP 18-06
HORIZONTAL CURVE SIGNS
PHASE 3

QUANTITY TAB./LOCATIONS

PLAN REF NO
QT9

SHEET 11 OF 24 SHEETS

CRP 18-06 Horizontal Curve Signs Phase 3 (Does Not Include Gravel Roads)

Road Name	Road Log #	Begin Mile Post	End Mile Post	Remove Existing Sign At Mile Post (Does Not Include Gravel Roads)	Existing Sign Code	PC Mile Post	PT Mile Post	Proposed Advisory Speed	Advance Placement Distance	Chevron Spacing - Adjusted to Fit Curve	Proposed Sign Location - Increasing Mile Post	Proposed Sign Location - Decreasing Mile Post	Item 3	Item 5						Item 6	Item 8	Item 9			* Comments / Notes
													Remove Existing Signs & Post	W1-1L, Turn 30"x30"	W1-1R, Turn 30"x30"	W1-3L, Reverse Turn 30"x30"	W1-3R, Reverse Turn 30"x30"	W1-5, Winding Road 30"x30"	W1-5R, Winding Road 30"x30"	W1-6, Large Arrow 48"x24"	W1-8, Chevron 18"x24"	W13-1P,24"x24" 10 MPH	W13-1P,24"x24" 30 MPH	W13-1P,24"x24" 35 MPH	
10.5-NW	32350	0.000	1.010																						
				0.028	W1-2L/W13-1P								1												
						0.066	0.102	30	125	64	0.042					1					6		1		30 MPH
						0.116	0.148	30	125	57		0.172				1					6		1		30 MPH
				0.285	W1-3L/W13-1P								1												
				0.895	W1-1L/W13-1p								1												
						0.998	1.020	10	200	N/A	0.960	1.058		1	1							2			10 MPH
											1.010	1.000								2					Arrows may require inspector field placement
				1.124	W1-1L/W13-1P								1												
12.5-NW	32640	0.000	2.030																						
						0.333	0.425	35	125	98	0.309								1		10			1	35 MPH
						0.484	0.520	35		96											4				
						0.536	0.595	35	125	104		0.619							1		6			1	35 MPH
						0.610	0.663	30	125	70	0.586						1				8		1		30 MPH
						0.695	0.735	30	125	71		0.759					1				6		1		30 MPH
						0.870	0.910	35	125	106	0.846								1		4			1	35 MPH
						0.961	0.996	35	125	93											4				
						1.052	1.080	35	125	74		1.104							1		4			1	35 MPH
						1.112	1.162	30	125	66	1.088								1		8		1		30 MPH
						1.177	1.225	30		64											8				
						1.255	1.300	30		80											6				
						1.35[illegible]	1.398	30	125	76		1.422						1			6		1		30 MPH
						1.561	1.626	30	125	68	1.537							1			10		1		30 MPH
						1.722	1.750	30		73											4				
						1.797	1.832	30		62											6				
						1.852	1.885	30		59											6				
						1.931	1.962	30	125	54		1.986							1		6		1		30 MPH
											Total This Sheet		4	1	1	2	2	2	6	2	118	2	8	4	

INFORMATIONAL COPY ONLY - NOT FOR BIDDING

TIME				
DATE				
PLOTTED BY	S. Dart			
DESIGNED BY	S. Dart			
ENTERED BY	S. Dart			
CHECKED BY	J. Tincher			
PROJ. ENGR.	B. Bersanti			
COUNTY ENGINEER	J. Tincher	REVISION	DATE	BY

COUNTY NO.	STATE
13	WASH

PROGRAM NUMBER

FED.AID PROJ.NO.

HSIP-000S(502)

ROAD LOG NUMBER

VARIOUS

JEFFREY C. TINCHER, STATE OF WASHINGTON, #23338, REGISTERED PROFESSIONAL ENGINEER

1/23/19

DATE

P.E. STAMP BOX

Grant County
Public Works Department
124 Enterprise St. SE
Ephrata, WA 98823
(509) 754-6082

CRP 18-06
HORIZONTAL CURVE SIGNS
PHASE 3

QUANTITY TAB./LOCATIONS

PLAN REF NO
QT10

SHEET 12 OF 24 SHEETS

CRP 18-06 Horizontal Curve Signs Phase 3 (Does Not Include Gravel Roads)

Road Name	Road Log #	Begin Mile Post	End Mile Post	Remove Existing Sign At Mile Post (Does Not Include Gravel Roads)	Existing Sign Code	PC Mile Post	PT Mile Post	Proposed Advisory Speed	Advance Placement Distance	Chevron Spacing - Adjusted to Fit Curve	Proposed Sign Location - Increasing Mile Post	Proposed Sign Location - Decreasing Mile Post	Item 3	Item 5						Item 8	Item 9				* Comments / Notes
													Remove Existing Signs & Post	W1-1L, Turn 30"x30"	W1-2L, Curve 30"x30"	W1-2R, Curve 30"x30"	W1-3L, Reverse Turn 30"x30"	W1-5L, Winding Road 30"x30"	W1-5R, Winding Road 30"x30"	W1-8, Chevron 18"x24"	W13-1P,24"x24" 20 MPH	W13-1P,24"x24" 30 MPH	W13-1P,24"x24" 35 MPH	W13-1P,24"x24" 45 MPH	
16-NW	33150	5.970	8.480																						
				5.948	W1-5R/W13-1P								1												
						6.058	6.103	30	125	79	6.035						1			6		1			30 MPH
						6.136	6.169	30	125	58		6.192					1			6		1			30 MPH
				6.222	W1-5L/W13-1P								1												
						6.363	6.381	45	100	N/A	6.353	6.391			1	1								2	45 MPH/No Chevrons
						6.813	6.881	35	125	120	6.790								1	6			1		35 MPH
						7.050	7.089			103										4					
						7.185	7.228			114										4					
				7.220	W1-5/W13-1P								1												
						7.283	7.337			95										6					
						7.363	7.407			117										4					
						7.430	7.485	30	125	73		7.508							1	8		1			30 MPH
						7.606	7.635	20	175	77	7.573							1		4	1				20 MPH
						7.667	7.689			59										4					
						7.699	7.728			77										4					
						7.773	7.817	20	175	77		7.850							1	6	1				20 MPH
						7.935	7.971	45	100	N/A	7.945								1					1	45 MPH/No Chevrons
						7.990	8.020																		No Chevrons
						8.098	8.131	45	100	N/A		8.141							1					1	45 MPH/No Chevrons
				8.249	W1-5L/W13-1P								1												
23-NW	33600	0.000	0.170																						
						0.015	0.045	20	175	80	N/A	0.078		1						4	1				20 MPH, No increasing sign due to intersection
												Total This Sheet	4	1	1	1	2	1	5	66	3	3	1	4	

INFORMATIONAL COPY ONLY - NOT FOR BIDDING

TIME				
DATE				
PLOTTED BY	S. Dart			
DESIGNED BY	S. Dart			
ENTERED BY	S. Dart			
CHECKED BY	J. Tincher			
PROJ. ENGR.	B. Bersanti			
COUNTY ENGINEER	J. Tincher	REVISION	DATE	BY

COUNTY NO.	STATE
13	WASH

PROGRAM NUMBER

FED.AID PROJ.NO.

HSIP-000S(502)

ROAD LOG NUMBER

VARIOUS

JEFFREY C. TINCHER STATE OF WASHINGTON 22338 REGISTERED PROFESSIONAL ENGINEER

1/23/19

DATE

P.E. STAMP BOX

Grant County
Public Works Department
124 Enterprise St. SE
Ephrata, WA 98823
(509) 754-6082

CRP 18-06
HORIZONTAL CURVE SIGNS
PHASE 3

QUANTITY TAB./LOCATIONS

PLAN REF NO
QT11

SHEET 13 OF 24 SHEETS

CRP 18-06 Horizontal Curve Signs Phase 3 (Does Not Include Gravel Roads)

Road Name	Road Log #	Begin Mile Post	End Mile Post	Remove Existing Sign At Mile Post (Does Not Include Gravel Roads)	Existing Sign Code	PC Mile Post	PT Mile Post	Proposed Advisory Speed	Advance Placement Distance	Chevron Spacing - Adjusted to Fit Curve	Proposed Sign Location - Increasing Mile Post	Proposed Sign Location - Decreasing Mile Post	Item 3	Item 5		Item 8	Item 9				* Comments / Notes
													Remove Existing Signs & Post	W1-1L, Turn 30"x30"	W1-1R, Turn 30"x30"	W1-8, Chevron 18"x24"	W13-1P,24"x24" 15 MPH	W13-1P,24"x24" 20 MPH	W13-1P,24"x24" 25 MPH	W13-1P,24"x24" 30 MPH	
4-NW	36300	0.000	3.300																		
						3.210	3.250	15	200	35	3.173			1		8	1				15 MPH
						3.260	3.280	15	N/A	35		N/A				6					Chevrons only
10-NW	37000	1.900	3.410																		
				1.829	W1-1R								1								
						1.865	1.943	25	175	69	1.787	2.021		1	1	12			2		25 MPH
						3.372	3.398	20	175	67	3.339				1	4		1			20 MPH, No decreasing mp sign due to intersection
F-NW	37454	0.000	0.280																		
						0.100	0.165	30	125	69	0.076	0.189		1	1	10				2	30 MPH
											Total This Page		1	3	3	40	1	1	2	2	

INFORMATIONAL COPY ONLY - NOT FOR BIDDING

TIME			
DATE			
PLOTTED BY	S. Dart		
DESIGNED BY	S. Dart		
ENTERED BY	S. Dart		
CHECKED BY	J. Tincher		
PROJ. ENGR.	B. Bersanti		
COUNTY ENGINEER	J. Tincher	REVISION	DATE / BY

COUNTY NO. 13 | STATE WASH | PROGRAM NUMBER

FED.AID PROJ.NO. HSIP-000S(502)

ROAD LOG NUMBER VARIOUS

JEFFREY C. TINCHER, STATE OF WASHINGTON, 23338, REGISTERED PROFESSIONAL ENGINEER — 1/23/19 — DATE — P.E. STAMP BOX

Grant County
Public Works Department
124 Enterprise St. SE
Ephrata, WA 98823
(509) 754-6082

CRP 18-06
HORIZONTAL CURVE SIGNS
PHASE 3

QUANTITY TAB./LOCATIONS

PLAN REF NO QT12

SHEET 14 OF 24 SHEETS

CRP 18-06 Horizontal Curve Signs Phase 3 (Does Not Include Gravel Roads)

Road Name	Road Log #	Begin Mile Post	End Mile Post	Remove Existing Sign At Mile Post (Does Not Include Gravel Roads)	Existing Sign Code	PC Mile Post	PT Mile Post	Proposed Advisory Speed	Advance Placement Distance	Chevron Spacing - Adjusted to Fit Curve	Proposed Sign Location - Increasing Mile Post	Proposed Sign Location - Decreasing Mile Post	Item 3	Item 5				Item 8	Item 9			* Comments / Notes
													Remove Existing Signs & Post	W1-2L, Curve 30"x30"	W1-2R, Curve 30"x30"	W1-5L, Winding Road 30"x30"	W1-5R, Winding Road 30"x30"	W1-8, Chevron 18"x24"	W13-1P,24"x24" 30 MPH	W13-1P,24"x24" 35 MPH	W13-1P,24"x24" 40 MPH	
11.5-NW	36900	0.000	5.250																			
				0.149	W1-2L								1									
						0.230	0.265	40	100	45	0.211			1				4			1	40 MPH
								40	100			0.284			1						1	40 MPH
				0.385	W1-2R								1									
				1.014	W1-5L								1									
						1.170	1.200	40	100	80	1.014			1				4			1	40 MPH
								40				1.219			1						1	40 MPH
						1.390	1.440	30	125		1.366					1			1			30 MPH
								30														
						1.467	1.552	30		75								12				
						1.572	1.602	30		80								4				
						1.627	1.717	30		80								12				
						1.738	1.774	30		20								4				
						1.797	1.845															
						1.876	1.905	30		77								4				
						1.934	1.967	30		58								4				
						2.034	2.069	30		61								6				
									125			2.093					1		1			30 MPH
				2.085	W1-5R								1									
				2.156	W1-5R								1									
						2.320	2.345	35	125	65	2.297						1	4		1		35 MPH
						2.880	2.917	35		65		2.940					1	6		1		35 MPH
				3.000	W1-5L								1									
				3.260	W1-5L								1									
						3.360	3.400	30	125	70	3.336						1	6	1			30 MPH
						3.420	3.448	30		37								4				
						3.474	3.510	30	125	63		3.534				1		6				
						3.682	3.725	30	125	76	3.658					1		6	1			30 MPH
						3.825	3.879	30		71								8				
						3.890	3.927	30		43								4				
				3.965	W1-5R								1									
						3.990	4.028															
						4.058	4.097	30		67								6				
						4.185	4.230	30		80								6				
						4.306	4.350	30		78								6				
						4.373	4.417	30	125	78		4.441				1		6	1			30 MPH
				4.750	W1-5L								1									
						4.475	4.512	40	100	60	4.456	4.531		1	1			4			2	40 MPH
						4.860	4.890	35	125	60	4.836					1		4		1		35 MPH
						4.908	4.944	35		60								4		1		35 MPH
						4.956	4.990	35	125	60		5.014					1	4				
				5.130	W1-5R								1									
											Total This Sheet		10	3	3	5	5	138	5	4	6	

INFORMATIONAL COPY ONLY - NOT FOR BIDDING

TIME				
DATE				
PLOTTED BY	S. Dart			
DESIGNED BY	S. Dart			
ENTERED BY	S. Dart			
CHECKED BY	J. Tincher			
PROJ. ENGR.	B. Bersanti			
COUNTY ENGINEER	J. Tincher	REVISION	DATE	BY

COUNTY NO.	STATE	FED. AID PROJ. NO.
13	WASH	HSIP-000S(502)
PROGRAM NUMBER		ROAD LOG NUMBER
		VARIOUS

JEFFREY C. TINCHER, STATE OF WASHINGTON, 22338, REGISTERED PROFESSIONAL ENGINEER
1/23/19
DATE
P.E. STAMP BOX

Grant County
Public Works Department
124 Enterprise St. SE
Ephrata, WA 98823
(509) 754-6082

CRP 18-06
HORIZONTAL CURVE SIGNS
PHASE 3

QUANTITY TAB./LOCATIONS

PLAN REF NO
QT13

SHEET 15 OF 24 SHEETS

CRP 18-06 Horizontal Curve Signs Phase 3 (Does Not Include Gravel Roads)

													Item 3	Item 5				Item 8	Item 9		
Road Name	Road Log #	Begin Mile Post	End Mile Post	Remove Existing Sign At Mile Post (Does Not Include Gravel Roads)	Existing Sign Code	PC Mile Post	PT Mile Post	Proposed Advisory Speed	Advance Placement Distance	Chevron Spacing - Adjusted to Fit Curve	Proposed Sign Location - Increasing Mile Post	Proposed Sign Location - Decreasing Mile Post	Remove Existing Signs & Post	W1-1R, Turn 30"x30"	W1-2L, Curve 30"x30"	W1-2R, Curve 30"x30"	W1-3R, Reverse Turn 30"x30"	W1-8, Chevron 18"x24"	W13-1P,24"x24" 20 MPH	W13-1P,24"x24" 40 MPH	* Comments / Notes
2-NW	39020	0.000	3.060																		
						0.010	0.046	N/a	125	64		0.070		1				6			No spped plaque, No increasing sign do to intersection
						0.204	0.311	40	100	118	0.181	0.330			1	1		10		2	40 MPH
1-NE	43540	0.000	1.900																		
				1.670	W1-1R/W13-1P								1								
						1.814	1.871	20	175	76	1.781						1	8	1		20 MPH
						1.919	1.994	20	175	80		2.027					1	8	1		20 MPH
				1.953	W1-1L/W13-1P								1								
6.7-NE	44790	0.000	0.090																		
						0.012	0.036	N/A	175	64	N/A	0.069		1				4			No advanced/speed plaque due to intersection
											Total This Sheet		2	2	1	1	2	36	2	2	

INFORMATIONAL COPY ONLY - NOT FOR BIDDING

TIME				
DATE				
PLOTTED BY	S. Dart			
DESIGNED BY	S. Dart			
ENTERED BY	S. Dart			
CHECKED BY	J. Tincher			
PROJ. ENGR.	B. Bersanti			
COUNTY ENGINEER	J. Tincher	REVISION	DATE	BY

COUNTY NO.	STATE
13	WASH
PROGRAM NUMBER	

FED.AID PROJ.NO.
HSIP-000S(502)

ROAD LOG NUMBER
VARIOUS

JEFFREY C. TINCHER, STATE OF WASHINGTON, 42338, REGISTERED PROFESSIONAL ENGINEER
1/23/19
DATE
P.E. STAMP BOX

Grant County
Public Works Department
124 Enterprise St. SE
Ephrata, WA 98823
(509) 754-6082

CRP 18-06
HORIZONTAL CURVE SIGNS
PHASE 3

QUANTITY TAB./LOCATIONS

PLAN REF NO
QT14

SHEET 16 OF 24 SHEETS

CRP 18-06 Horizontal Curve Signs Phase 3 (Does Not Include Gravel Roads)

													Item 3	Item 5					Item 8	Item 9				
Road Name	Road Log #	Begin Mile Post	End Mile Post	Remove Existing Sign At Mile Post (Does Not Include Gravel Roads)	Existing Sign Code	PC Mile Post	PT Mile Post	Proposed Advisory Speed	Advance Placement Distance	Chevron Spacing - Adjusted to Fit Curve	Proposed Sign Location - Increasing Mile Post	Proposed Sign Location - Decreasing Mile Post	Remove Existing Signs & Post	W1-1L, Turn 30"x30"	W1-1R, Turn 30"x30"	W13R, Reverse Turn 30"x30"	W1-5L, Winding Road 30"x30"	W1-5R, Winding Road 30"x30"	W1-8, Chevron 18"x24"	W13-1P,24"x24" 15 MPH	W13-1P,24"x24" 25 MPH	W13-1P,24"x24" 30 MPH	W13-1P,24"x24" 35 MPH	* Comments / Notes
B.5-NE	46450	5.620	6.260																					
				5.630	W1-1R/W13-1P								1											
						5.674	5.760	15	200	38	5.637					1			24	1				15 MPH
				5.730	W1-6								1											
						5.838	6.070	15	200	40		6.107				1			62	1				15 MPH
E-NE	46750	0.000	0.600																					
						0.008	0.024	35	175	43	0.008						1						1	No Chevs Bus Stop/35 MPH
						0.039	0.100	35	175	108									6					
						0.208	0.252	35	175	117		0.285					1		4				1	35 MPH
						0.277	0.315	30	125	67	0.253	0.339		1	1				6			1		30 MPH
				0.830	W1-4L/W13-1P								1											
				0.460	W1-4L/W13-1P								1											
20.8-NE	50521	0.010	0.450																					
						0.019	0.135	25	175	77	0.019						1		16		1			25 MPH
						0.161	0.216	25	175	73									8					
						0.298	0.320	25	175	55									4					
						0.345	0.372	25	175	72		0.339						1	4		1			25 MPH
J.8-NE	51050	1.800	2.890																					
				2.391	W1-5R/W13-1P								1											
						2.455	2.502	30	125	62	2.526							1	8			1		30 MPH
						2.528	2.569	30	125	72									6					
						2.593	2.669	30	125	67									12					
						2.815	2.855	30	125	70		2.855					1		6			1		30 MPH
				2.717	W1-5L/W13-1P								1											
											Total This Sheet		6	1	1	2	4	2	166	2	2	3	2	

INFORMATIONAL COPY ONLY- NOT FOR BIDDING

TIME	
DATE	
PLOTTED BY	S. Dart
DESIGNED BY	S. Dart
ENTERED BY	S. Dart
CHECKED BY	J. Tincher
PROJ. ENGR.	B. Bersanti
COUNTY ENGINEER	J. Tincher

REVISION | DATE | BY

COUNTY NO.	STATE
13	WASH

PROGRAM NUMBER

FED.AID PROJ.NO.
HSIP-000S(502)

ROAD LOG NUMBER
VARIOUS

JEFFREY C. TINCHER, STATE OF WASHINGTON, 42358, REGISTERED PROFESSIONAL ENGINEER
1/23/19
DATE
P.E. STAMP BOX

Grant County
Public Works Department
124 Enterprise St. SE
Ephrata, WA 98823
(509) 754-6082

CRP 18-06
HORIZONTAL CURVE SIGNS
PHASE 3

QUANTITY TAB./LOCATIONS

PLAN REF NO
QT15

SHEET 17 OF 24 SHEETS

CRP 18-06 Horizontal Curve Signs Phase 3 (Does Not Include Gravel Roads)

Road Name	Road Log #	Begin Mile Post	End Mile Post	Remove Existing Sign At Mile Post (Does Not Include Gravel Roads)	Existing Sign Code	PC Mile Post	PT Mile Post	Proposed Advisory Speed	Advance Placement Distance	Chevron Spacing - Adjusted to Fit Curve	Proposed Sign Location - Increasing Mile Post	Proposed Sign Location - Decreasing Mile Post	Item 3	Item 5					Item 8	Item 9				* Comments / Notes
													Remove Existing Signs & Post	W1-1L, Turn 30"x30"	W1-4L, Reverse Curve 30"x30"	W1-4R, Reverse Curve 30"x30"	W1-5L, Winding Road 30"x30"	W1-5R, Winding Road 30"x30"	W1-8, Chevron 18"x24"	W13-1P,24"x24" 20 MPH	W13-1P,24"x24" 25 MPH	W13-1P,24"x24" 30 MPH	W13-1P,24"x24" 40 MPH	
22-NE	52360	0.700	4.920																					
				1.473	W1-5								1											
						1.831	1.973	30	100	80	1.473						1					1		30 MPH
								25	100			2.361						1			1			25 MPH
				2.361	W1-5								1											
23-NW	93048	9.540	9.640																					
						9.608	9.635	20	175	72	9.641	N/A		1					4	1				20 MPH, Increasing sign only
Black Rock Rd	94015	0.000	3.100																					
				1.331	W1-2L								1											
						1.452	1.509	40	100	102					1				6				1	40 MPH
						1.606	1.658	40	100	92						1			6				1	40 MPH
				2.787	W1-2R								1											
											Total This Sheet		4	1	1	1	1	1	16	1	1	1	2	

INFORMATIONAL COPY ONLY - NOT FOR BIDDING

TIME				
DATE				
PLOTTED BY	S. Dart			
DESIGNED BY	S. Dart			
ENTERED BY	S. Dart			
CHECKED BY	J. Tincher			
PROJ. ENGR.	B. Bersanti			
COUNTY ENGINEER	J. Tincher	REVISION	DATE	BY

COUNTY NO.	STATE
13	WASH
PROGRAM NUMBER	

FED. AID PROJ. NO.
HSIP-000S(502)

ROAD LOG NUMBER
VARIOUS

JEREMY C. TINCHER, STATE OF WASHINGTON, 42338, REGISTERED PROFESSIONAL ENGINEER
1/23/19
DATE
P.E. STAMP BOX

Grant County
Public Works Department
124 Enterprise St. SE
Ephrata, WA 98823
(509) 754-6082

CRP 18-06
HORIZONTAL CURVE SIGNS
PHASE 3

QUANTITY TAB./LOCATIONS

PLAN REF NO
QT16

SHEET 18 OF 24 SHEETS

CRP 18-06 Horizontal Curve Signs Phase 3 (Does Not Include Gravel Roads)

	Item 3	Item 5														Item 6	Item 7	Item 8	Item 5						Item 9							
	Remove Existing Signs & Post	W1-1AL, Turn 30"x30"	W1-1AR, Turn 30"x30"	W1-1L, Turn 30"x30"	W1-1R, Turn 30"x30"	W1-2AL, Curve 30"x30" Speed on Sign	W1-2AR, Curve 30"x30" Speed on Sign	W1-2L, Curve 30"x30"	W1-2R, Curve 30"x30"	W1-3L, Reverse Turn 30"x30"	W1-3R, Reverse Turn 30"x30"	W1-4L, Reverse Curve 30"x30"	W1-4R, Reverse Curve 30"x30"	W1-5L, Winding Road 30"x30"	W1-5R, Winding Road 30"x30"	W1-6, Large Arrow 48"x24"	W1-7, Double Large Arrow 48"x24"	W1-8, Chevron 18"x24"	W1-10L, Curve with Intersection 30"x30"	W1-10R, Curve with Intersection 30"x30"	W1-10a-L, Curve with Intersection 30"x30"	W1-10a-R, Curve with Intersection 30"x30"	W1-10b-L, Curve with Intersection 30"x30"	W1-10c-R, Curve with Intersection 30"x30"	W13-1P,24"x24" 10 MPH	W13-1P,24"x24" 15 MPH	W13-1P,24"x24" 20 MPH	W13-1P,24"x24" 25 MPH	W13-1P,24"x24" 30 MPH	W13-1P,24"x24" 35 MPH	W13-1P,24"x24" 40 MPH	W13-1P,24"x24" 45 MPH
Totals for Non Gravel Roads	47	1	1	25	22	0	0	18	17	7	11	1	1	15	21	10	1	860	0	0	0	0	0	0	4	10	14	12	43	30	16	4

INFORMATIONAL COPY ONLY- NOT FOR BIDDING

TIME				
DATE				
PLOTTED BY	S. Dart			
DESIGNED BY	S. Dart			
ENTERED BY	S. Dart			
CHECKED BY	J. Tincher			
PROJ. ENGR.	J. Tincher			
COUNTY ENGINEER	J. Tincher	REVISION	DATE	BY

COUNTY NO.	STATE	FED.AID PROJ.NO.
13	WASH	HSIP-000S(502)
PROGRAM NUMBER		ROAD LOG NUMBER
		VARIOUS

JEFFREY C. TINCHER, STATE OF WASHINGTON, 42338, REGISTERED PROFESSIONAL ENGINEER

1/23/19

DATE

P.E. STAMP BOX

Grant County
Public Works Department
124 Enterprise St. SE
Ephrata, WA 98823
(509) 754-6082

CRP 18-06
HORIZONTAL CURVE SIGNS
PHASE 3

QUANTITY TAB. & LOCATION

PLAN REF NO
QT17

SHEET 19 OF 24 SHEETS

CRP 18-06 Horizontal Curve Signs Phase 3 (Gravel Roads)

Road Name	Road Log #	Begin Mile Post	End Mile Post	Existing Sign Mile Post	Existing Sign Code	PC Mile Post	PT Mile Post	Proposed Advisory Speed	Advance Placement Distance	Chevron Spacing - Adjusted to Fit Curve	Proposed Sign Location - Increasing Mile Post	Proposed Sign Location - Decreasing Mile Post	Item 3 Remove Existing Signs & Post	Item 4 I7-701 Primitive Road No Warning Signs 36"x42"	Item 5 W1-3L, Reverse Turn 30"x30"	Item 8 W1-8, Chevron 18"x24"	Item 9 W13-1P,24"x24" 25 MPH	* Comments / Notes
11-SW	11510	0.00	1.05	0.05	I7-701 Primitive Road								1					Remove I7-701 sign
L.5-SW	12280	3.28	3.84			3.744	3.784	25	175	70	3.817				1	6	1	25 MPH
						3.826	3.859	25		58		N/A				6		No Decrease Dead End
I-SW	12410	1.00	2.23	1.058	I7-701 Primitive Road								1					Remove I7-701 sign, Primitive Road Sign
E-SW	12990	2.33	2.88								2.374			1				Install I7-701 Primitive Road Sign
											Total This Sheet		2	1	1	12	1	

INFORMATIONAL COPY ONLY - NOT FOR BIDDING

TIME				
DATE				
PLOTTED BY	S. Dart			
DESIGNED BY	S. Dart			
ENTERED BY	S. Dart			
CHECKED BY	J. Tincher			
PROJ. ENGR.	B. Bersanti			
COUNTY ENGINEER	J. Tincher	REVISION	DATE	BY

COUNTY NO.	STATE	FED.AID PROJ.NO.
13	WASH	HSIP-000S(502)
PROGRAM NUMBER		ROAD LOG NUMBER: VARIOUS

JEFFREY C. TINCHER, STATE OF WASHINGTON, 18338, REGISTERED PROFESSIONAL ENGINEER
1/23/19
DATE
P.E. STAMP BOX

Grant County
Public Works Department
124 Enterprise St. SE
Ephrata, WA 98823
(509) 754-6082

CRP 18-06
HORIZONTAL CURVE SIGNS
PHASE 3

QUANTITY TAB./LOCATIONS

PLAN REF NO
QT18

SHEET 20 OF 24 SHEETS

CRP 18-06 Horizontal Curve Signs Phase 3 (Gravel Roads)

Road Name	Road Log #	Begin Mile Post	End Mile Post	Existing Sign Mile Post	Existing Sign Code	PC Mile Post	PT Mile Post	Proposed Advisory Speed	Advance Placement Distance	Chevron Spacing - Adjusted to Fit Curve	Proposed Sign Location - Increasing Mile Post	Proposed Sign Location - Decreasing Mile Post	Item 3	Item 5				Item 8	Item 9		* Comments / Notes
													Remove Existing Signs & Post	W1-1L, Turn 30"x30"	W1-1R, Turn 30"x30"	W1-5L, Winding Road 30"x30"	W1-5R, Winding Road 30"x30"	W1-8, Chevron 18"x24"	W13-1P,24"x24" 25 MPH	W13-1P,24"x24" 35 MPH	
9-SW	15220	2.110	6.610	4.346	I7-701 Primitive Road								1								
						2.143	2.171	35	125	82	2.116					1		4		1	35 MPH
						2.197	2.231	35		81								4			
						2.380	2.461	35		114								8			
						2.508	2.550	35		112								4		1	35 MPH
						2.572	2.611	35	125	102	2.635						1	4			
						2.760	2.890	35	125	114	2.727					1		12		1	35 MPH
						2.957	3.000	35		113								4			
						3.065	3.153	35		116								8			
						3.189	3.227	35		100								4			
						3.250	3.337	35		114								8			
						3.363	3.391	35		74								4			
						3.490	3.540	35	125	88		3.564				1		6		1	35 MPH
						3.667	3.740	35	125	96	3.643						1	8		1	35 MPH
						3.758	3.831	35		96								8			
						3.859	3.910	35	125	90		3.946				1		6		1	35 MPH
						4.500	4.540	25	175	70	4.476	4.564		1	1			6	2		25 MPH
						4.655	4.682	25	175	71	4.622					1		4	1		25 MPH
						4.781	4.811	25		79								4			
						4.949	5.000	25		67								8			
						5.017	5.064	25		62								8			
						5.094	5.182	25		77								12			
						5.226	5.249	25		61								4			
						5.261	5.300	25		69								6			
						5.315	5.348	25		58								6			
						5.350	5.380	25		79								4			
						5.480	5.510	25		79								4			
						5.522	5.[illegible]	25		73								12			
						5.665	[illegible].719	25		71								8			
						5.755	5.815	25		79								8			
						5.[illegible]	5.861	25		65								6			
						5.944	5.982	25		67								6			
						6.019	6.108	25		78								12			
						6.130	6.238	25		71								16			
						6.253	6.294	25		72								6			
						6.344	6.377	25		58								6			
						6.412	6.460	25		63								8			
						6.495	6.540	25		79		6.573				1		6	1		25 MPH
											Total This Sheet		1	1	1	6	2	252	4	6	

INFORMATIONAL COPY ONLY - NOT FOR BIDDING

TIME				
DATE				
PLOTTED BY	S. Dart			
DESIGNED BY	S. Dart			
ENTERED BY	S. Dart			
CHECKED BY	J. Tincher			
PROJ. ENGR.	B. Bersanti			
COUNTY ENGINEER	J. Tincher	REVISION	DATE	BY

COUNTY NO.	STATE
13	WASH
PROGRAM NUMBER	

FED.AID PROJ.NO.

HSIP-000S(502)

ROAD LOG NUMBER

VARIOUS

JEFFREY C. TINCHER, STATE OF WASHINGTON, 22338, REGISTERED PROFESSIONAL ENGINEER

1/23/19

DATE

P.E. STAMP BOX

Grant County
Public Works Department
124 Enterprise St. SE
Ephrata, WA 98823
(509) 754-6082

CRP 18-06
HORIZONTAL CURVE SIGNS
PHASE 3

QUANTITY TAB./LOCATIONS

PLAN REF NO
QT19

SHEET 21 OF 24 SHEETS

CRP 18-06 Horizontal Curve Signs Phase 3 (Gravel Roads)

Road Name	Road Log #	Begin Mile Post	End Mile Post	Existing Sign Mile Post	Existing Sign Code	Proposed Sign Location - Increasing Mile Post	Item 3 Remove Existing Signs & Post	Item 4 I7-701 Primitive Road No Warning Signs 36"x42"	* Comments / Notes
Q-SW	15550	0.000	0.250			0.018		1	Install I7-701 Sign
B-SE	20550	0.000	0.560			0.032		1	Install I7-701 Sign
14.7-SE	20740	0.000	2.020	0.061	I7-701 Primitive Road		1		Remove I7-701 sign
A-NE	21690	1.800	2.780			1.801		1	Install I7-701
N-SE	21850	0.000	0.440			0.038		1	Install I7-701
6.9-SE	25200	0.000	0.880	0.029	I7-701 Primitive Road		1		Remove I7-701
Baseline W	30000	0.000	0.750			0.033		1	Install I7-701
10.7-SW	36800	2.040	4.070			2.062		1	Install I7-701
8-NE	44670	1.000	2.000			1.078		1	Install I7-701
20-NE	46790	0.000	1.000			0.032		1	Install I7-701
K-NE	47150	3.180	5.140			3.181		1	Install I7-701
F-NE	50980	3.410	3.600			3.438		1	Install I7-701
27-SW	91042	0.000	0.990	0.952	I7-701 Primitive Road		1		Remove I7-701
					Total This Sheet		3	10	

INFORMATIONAL COPY ONLY- NOT FOR BIDDING

TIME			
DATE			
PLOTTED BY	S. Dart		
DESIGNED BY	S. Dart		
ENTERED BY	S. Dart		
CHECKED BY	J. Tincher		
PROJ. ENGR.	B. Bersanti		
COUNTY ENGINEER	J. Tincher	REVISION	DATE / BY

COUNTY NO.	STATE
13	WASH

PROGRAM NUMBER

FED.AID PROJ.NO.
HSIP-000S(502)

ROAD LOG NUMBER
VARIOUS

JEFFREY C. TINCHER, STATE OF WASHINGTON, 42338, REGISTERED PROFESSIONAL ENGINEER
1/23/14
DATE
P.E. STAMP BOX

Grant County
Public Works Department
124 Enterprise St. SE
Ephrata, WA 98823
(509) 754-6082

CRP 18-06
HORIZONTAL CURVE SIGNS
PHASE 3

QUANTITY TAB./LOCATIONS

PLAN REF NO
QT20

SHEET 22 OF 24 SHEETS

	CRP 18-06 Horizontal Curve Signs Phase 3 (Gravel Roads)																															
	Item 3	Item 4	Item 5														Item 6	Item 7	Item 8	Item 5						Item 9						
	Remove Existing Signs & Post	I7-701 Primitive Road No Warning Signs 36"x42"	W1-1AL, Turn 30"x30"	W1-1AR, Turn 30"x30"	W1-1L, Turn 30"x30"	W1-1R, Turn 30"x30"	W1-2AL, Curve 30"x30" Speed on Sign	W1-2AR, Curve 30"x30" Speed on Sign	W1-2L, Curve 30"x30"	W1-2R, Curve 30"x30"	W1-3L, Reverse Turn 30"x30"	W1-3R, Reverse Turn 30"x30"	W1-4L, Reverse Curve 30"x30"	W1-4R, Reverse Curve 30"x30"	W1-5L, Winding Road 30"x30"	W1-5R, Winding Road 30"x30"	W1-6, Large Arrow 48"x24"	W1-7, Double Large Arrow 48"x24"	W1-8, Chevron 18"x24"	W1-10L, Curve with Intersection 30"x30"	W1-10R, Curve with Intersection 30"x30"	W1-10a-L, Curve with Intersection 30"x30"	W1-10a-R, Curve with Intersection 30"x30"	W1-10b-L, Curve with Intersection 30"x30"	W1-10c-R, Curve with Intersection 30"x30"	W13-1P,24"x24" 10 MPH	W13-1P,24"x24" 15 MPH	W13-1P,24"x24" 20 MPH	W13-1P,24"x24" 25 MPH	W13-1P,24"x24" 30 MPH	W13-1P,24"x24" 35 MPH	W13-1P,24"x24" 40 MPH	W13-1P,24"x24" 45 MPH
Totals for Gravel Roads	6	11	0	0	1	1	0	0	0	0	1	0	0	0	6	2	0	0	264	0	0	0	0	0	0	0	0	0	5	0	6	0	0

INFORMATIONAL COPY ONLY- NOT FOR BIDDING

TIME				COUNTY NO. 13	STATE WASH	FED.AID PROJ.NO. HSIP-000S(502)	JEFFREY C. TINCHER STATE OF WASHINGTON 42338 REGISTERED PROFESSIONAL ENGINEER 1/23/19 DATE P.E. STAMP BOX	Grant County Public Works Department 124 Enterprise St. SE Ephrata, WA 98823 (509) 754-6082	CRP 18-06 HORIZONTAL CURVE SIGNS PHASE 3	PLAN REF NO QT21
DATE				PROGRAM NUMBER		ROAD LOG NUMBER VARIOUS			QUANTITY TAB. & LOCATION	SHEET 23 OF 24 SHEETS
PLOTTED BY	S. Dart									
DESIGNED BY	S. Dart									
ENTERED BY	S. Dart									
CHECKED BY	J. Tincher									
PROJ. ENGR.	J. Tincher									
COUNTY ENGINEER	J. Tincher	REVISION	DATE	BY						

BUFFER DATA (FEET)

LONGITUDINAL BUFFER SPACE = B

SPEED (MPH)	25	30	35	40	45	50	55	60	65	70
LENGTH (feet)	155	200	250	305	360	425	495	570	645	730

MINIMUM TAPER LENGTH = L (FEET)

LANE WIDTH (FEET)	POSTED SPEED LIMIT (MPH) 25	30	35	40	45	50	55	60	65	70
10	105	150	205	270	450	500	550	–	–	–
11	115	165	225	295	495	550	605	660	–	–
12	125	180	245	320	540	600	660	720	780	840

CHANNELIZING DEVICE SPACING (FEET)

MPH	TAPER	TANGENT
50/70	40	80
35/45	30	60
25/30	20	40

SIGN SPACING = X (FEET)

FREEWAYS/EXPRESSWAYS	55/70 MPH	1500±
RURAL HIGHWAYS	60/65 MPH	800±
RURAL ROADS	45/55 MPH	500±
RURAL ROADS & URBAN ARTERIALS	35/40 MPH	350±
RURAL ROADS, URBAN ARTERIALS, RESIDENTIAL & BUSINESS DISTRICTS BUSINESS DISTRICTS	25/30 MPH	200±
URBAN STREETS	25 MPH/LESS	100±

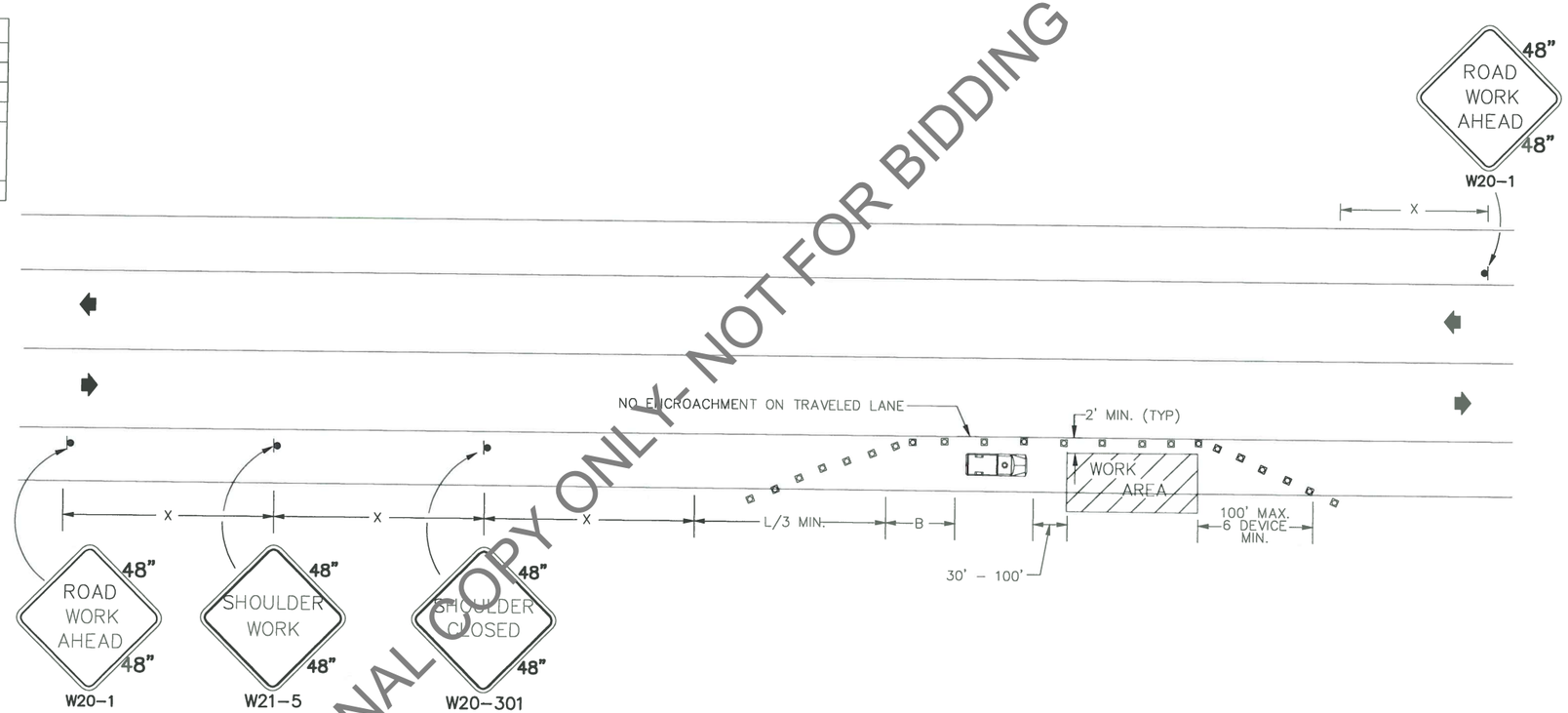

LEGEND

- TEMPORARY TRAFFIC CONTROL DEVICES
- SIGN
- WORK AREA CLOSED TO TRAFFIC
- PROTECTIVE VEHICLE W/ WARNING BEACON

TRAFFIC CONTROL PLAN

APPROVED FOR SHOULDER WORK.
APPROVED FOR CURVE SIGN INSTALLATIONS.

NOTES:

MAXIMUM 2 MILE SHOULDER CLOSURE LIMIT.

THIS TRAFFIC CONTROL PLAN NOT APPROVED FOR NIGHT WORK.

NO FLAGGERS OR SPOTTERS.

THIS TRAFFIC CONTROL PLAN SHALL BE USED IN TWO-LANE AND THREE-LANE SECTIONS.

INFORMATIONAL COPY ONLY - NOT FOR BIDDING

TIME				
DATE				
PLOTTED BY	S. Dart			
DESIGNED BY	S. Dart			
ENTERED BY	S. Dart			
CHECKED BY	J. Tincher			
PROJ. ENGR.	B. Bersanti			
COUNTY ENGINEER	J. Tincher	REVISION	DATE	BY

COUNTY NO.	STATE	FED. AID PROJ. NO.
13	WASH	HSIP-000S(502)
PROGRAM NUMBER		ROAD LOG NUMBER
		VARIOUS

JEFFREY C. TINCHER, STATE OF WASHINGTON, 42338, REGISTERED PROFESSIONAL ENGINEER
1/23/19
DATE
P.E. STAMP BOX

Grant County
Public Works Department
124 Enterprise St. SE
Ephrata, WA 98823
(509) 754-6082

CRP 18-06
HORIZONTAL CURVE SIGNS
PHASE 3

TRAFFIC CONTROL PLAN

PLAN REF NO
TCP1

SHEET 24 OF 24 SHEETS

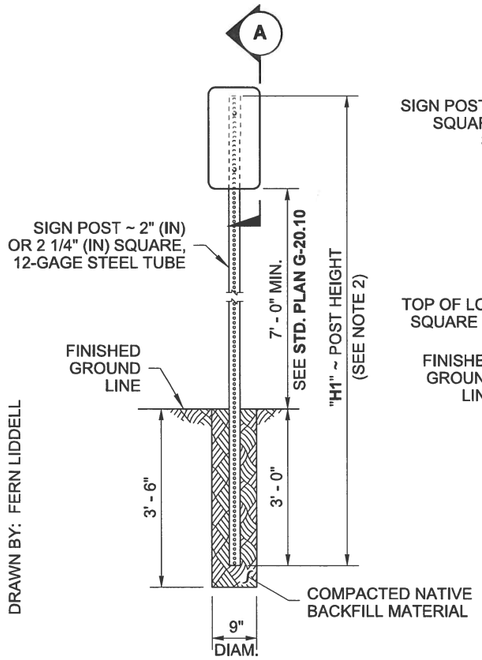

ELEVATION

TYPE ST-1 SIGN SUPPORT

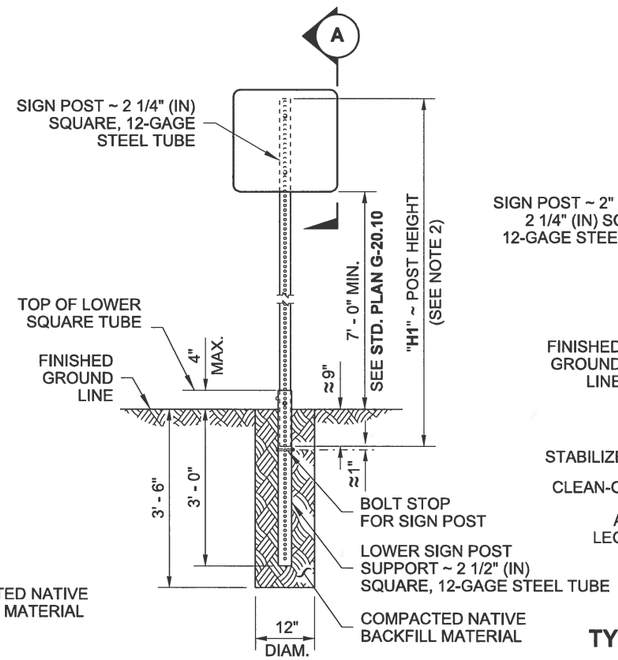

ELEVATION

TYPE ST-2 SIGN SUPPORT

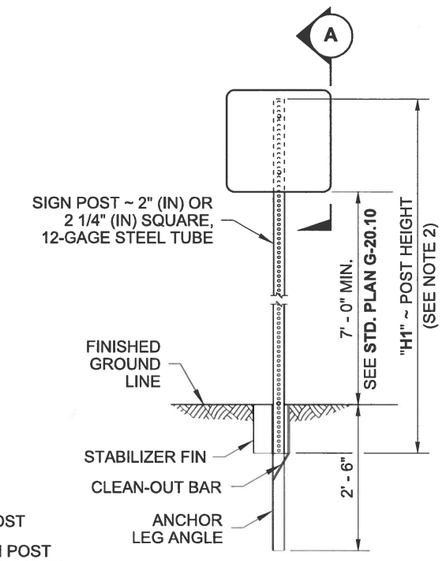

ELEVATION

TYPE ST-3 SIGN SUPPORT

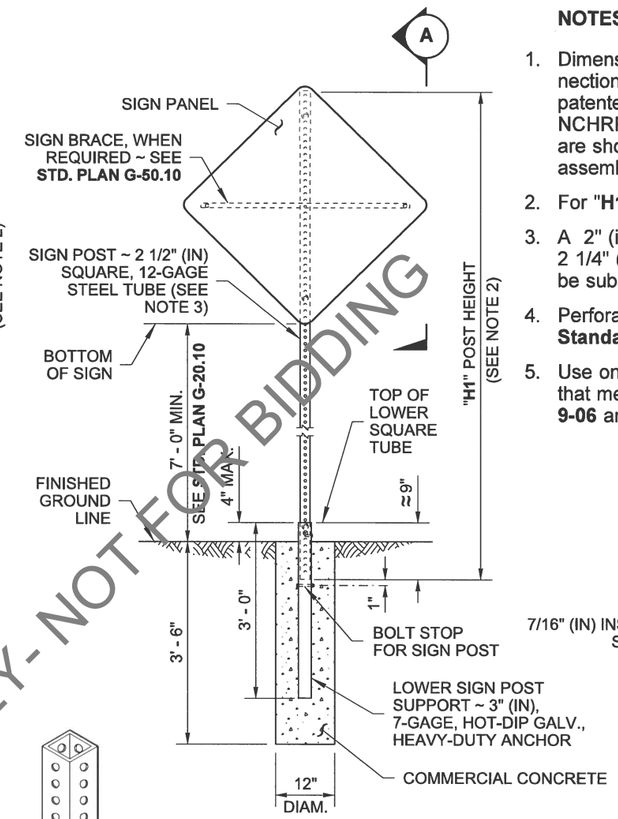

ELEVATION

TYPE ST-4 SIGN SUPPORT

NOTES

1. Dimensions for the parts used to assemble the base connections are intentionally not shown. Base connections are patented, manufactured products that are in compliance with NCHRP 350 crash test criteria. The base connection details are shown on this plan only to illustrate how the parts are assembled.
2. For "**H1**", refer to the Sign Specification Sheet in the Contract.
3. A 2" (in) post with a 2 1/4" (in) PSST anchor or a 2 1/4" (in) post with a 2 1/2" (in) PSST anchor may be substituted. See Contract Plans.
4. Perforated square steel post shall meet the requirements of **Standard Specification 9-06**.
5. Use only base connection manufacturer supplied hardware that meets the requirements of **Standard Specifications 9-06** and **9-28**.

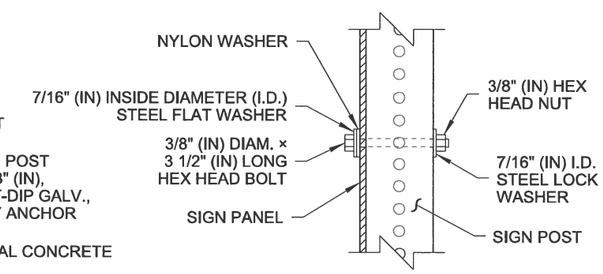

DETAIL (B)

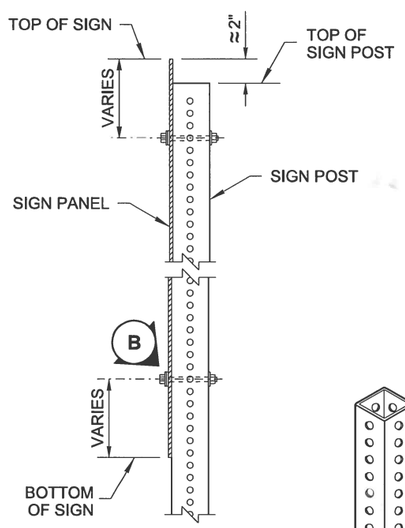

VIEW (A)

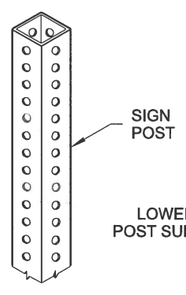

TYPE ST-1

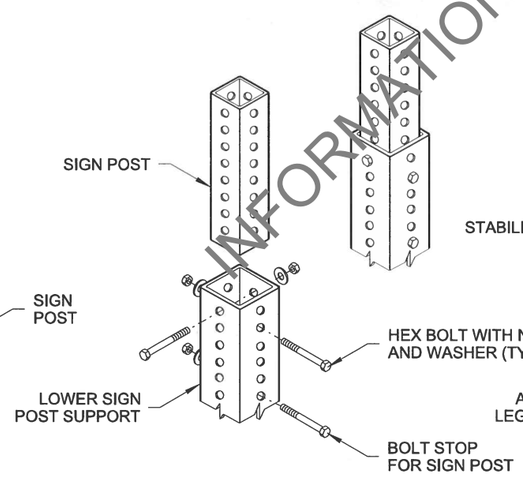

TYPE ST-2

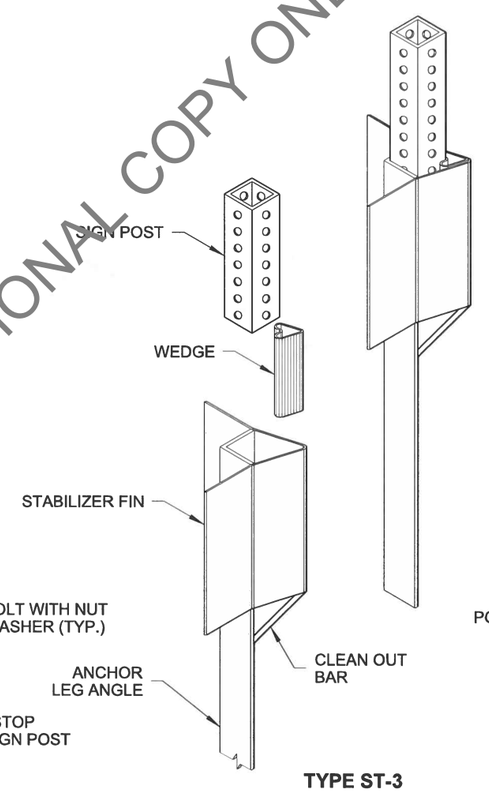

TYPE ST-3

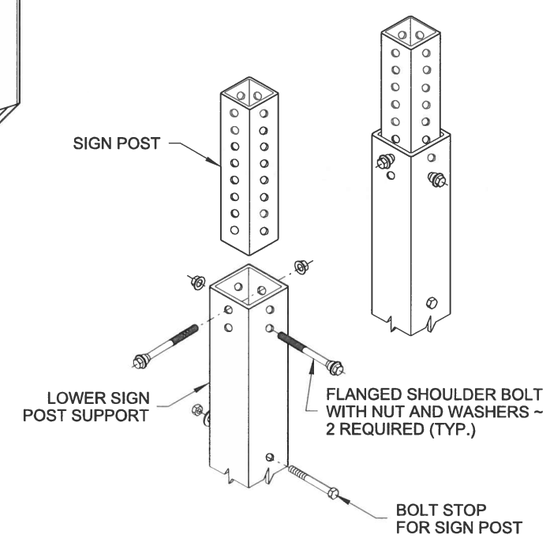

TYPE ST-4

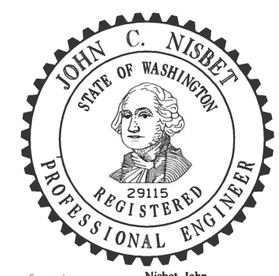

Nisbet, John
Jun 27 2017 3:24 PM

STEEL SIGN SUPPORT TYPES ST-1 - ST-4 INSTALLATION DETAILS

STANDARD PLAN G-24.50-04

SHEET 1 OF 1 SHEET

APPROVED FOR PUBLICATION

Carpenter, Jeff
Jul 11 2017 1:21 PM

STATE DESIGN ENGINEER

Washington State Department of Transportation

DRAWN BY: FERN LIDDELL

INFORMATIONAL COPY ONLY - NOT FOR BIDDING

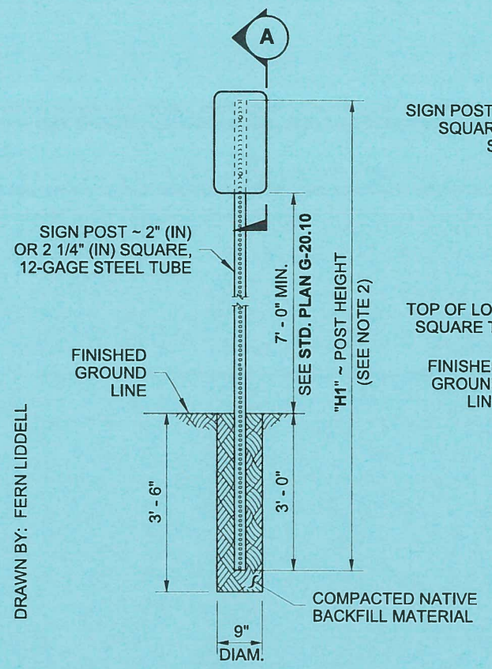

ELEVATION

TYPE ST-1 SIGN SUPPORT

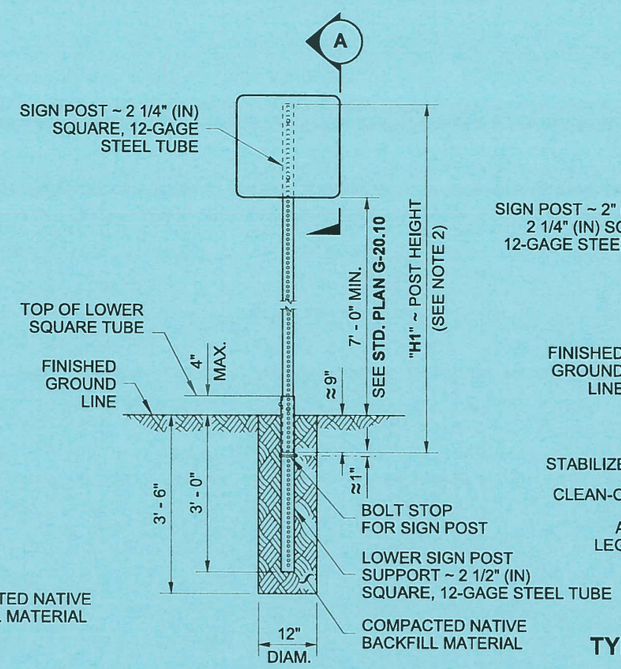

ELEVATION

TYPE ST-2 SIGN SUPPORT

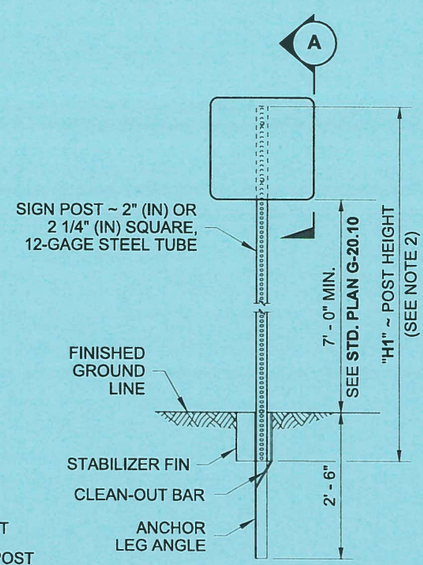

ELEVATION

TYPE ST-3 SIGN SUPPORT

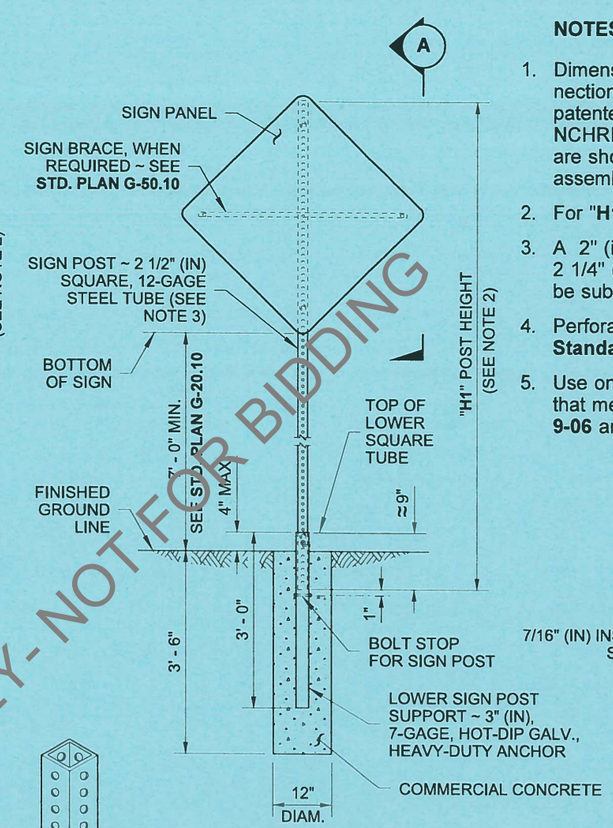

ELEVATION

TYPE ST-4 SIGN SUPPORT

NOTES

1. Dimensions for the parts used to assemble the base connections are intentionally not shown. Base connections are patented, manufactured products that are in compliance with NCHRP 350 crash test criteria. The base connection details are shown on this plan only to illustrate how the parts are assembled.
2. For "**H1**", refer to the Sign Specification Sheet in the Contract.
3. A 2" (in) post with a 2 1/4" (in) PSST anchor or a 2 1/4" (in) post with a 2 1/2" (in) PSST anchor may be substituted. See Contract Plans.
4. Perforated square steel post shall meet the requirements of **Standard Specification 9-06**.
5. Use only base connection manufacturer supplied hardware that meets the requirements of **Standard Specifications 9-06** and **9-28**.

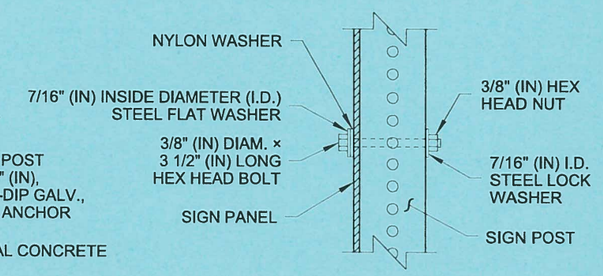

DETAIL (B)

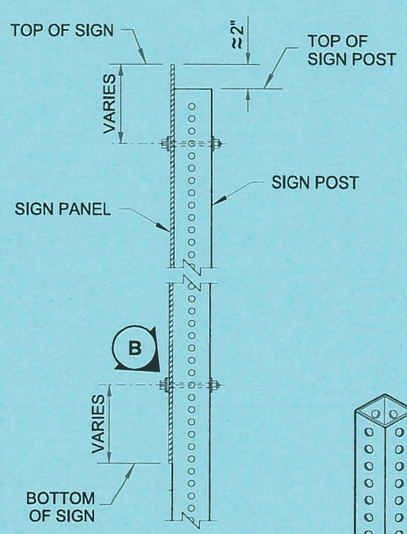

VIEW (A)

TYPE ST-1

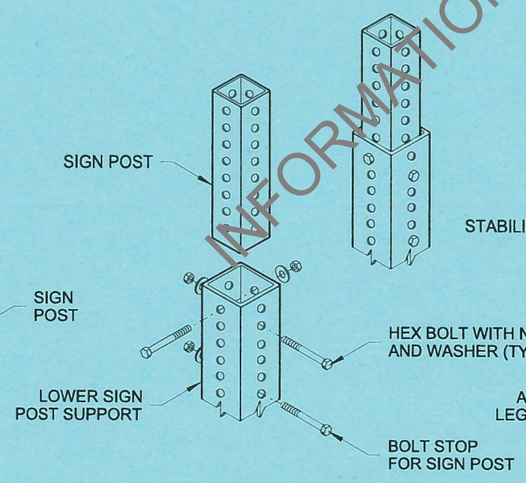

TYPE ST-2

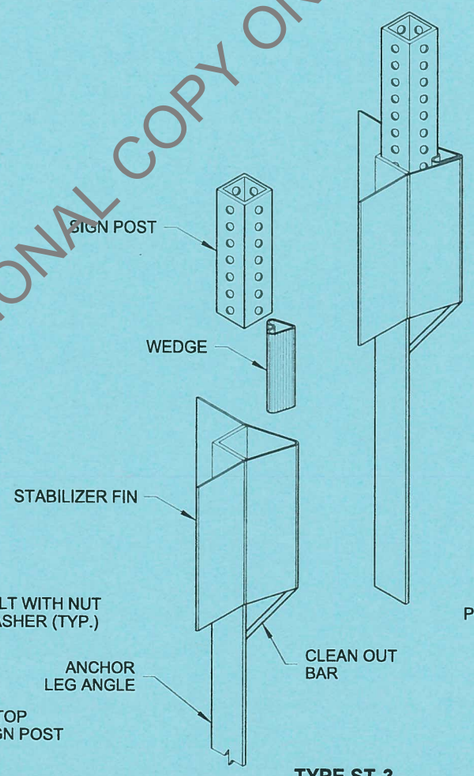

TYPE ST-3

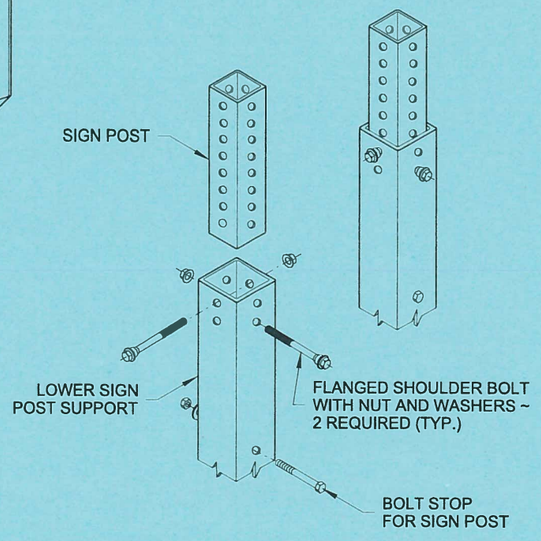

TYPE ST-4

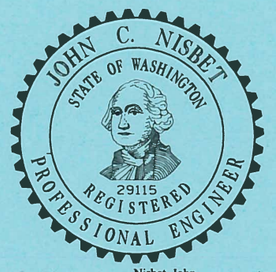

Nisbet, John
Jun 27 2017 3:24 PM

STEEL SIGN SUPPORT
TYPES ST-1 - ST-4
INSTALLATION DETAILS
STANDARD PLAN G-24.50-04

SHEET 1 OF 1 SHEET

APPROVED FOR PUBLICATION
Carpenter, Jeff
Jul 11 2017 1:21 PM
STATE DESIGN ENGINEER
Washington State Department of Transportation

DRAWN BY: FERN LIDDELL

INFORMATIONAL COPY ONLY - NOT FOR BIDDING

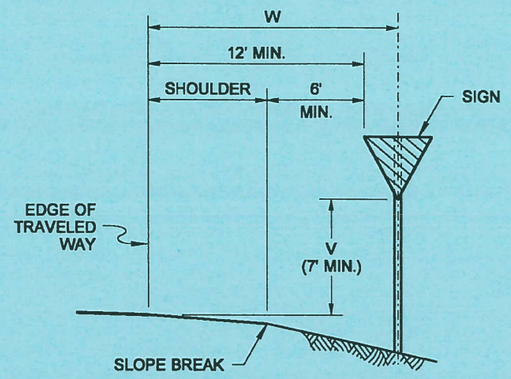

SIGN INSTALLATION IN FILL SECTION

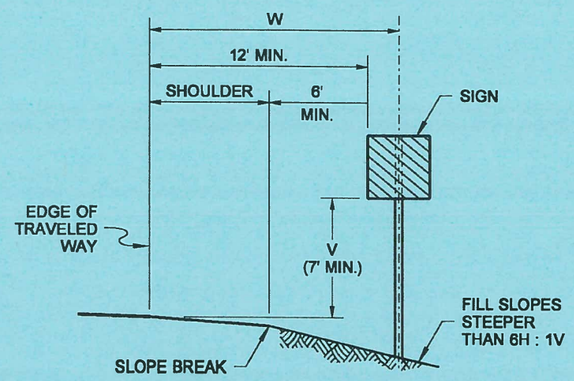

SIGN INSTALLATION ON STEEP FILL SLOPES

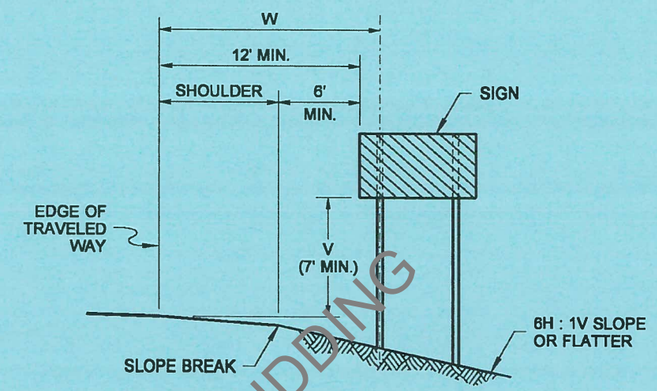

MULTIPLE SIGN POST INSTALLATION IN FILL SECTION

NOTES

1. Refer to the Sign Specification Sheet of the Contract for the 'V' and 'W' distances.
2. The minimum vertical distance from the bottom of the sign to the ground shall not be less than 7' (ft) for signs located within the Design Clear Zone.

DRAWN BY: FERN LIDDELL

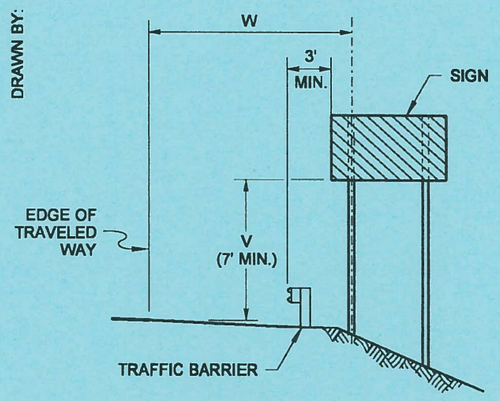

SIGN INSTALLATION BEHIND TRAFFIC BARRIER

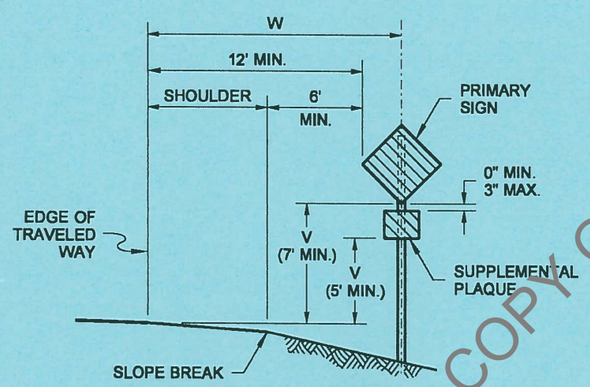

SIGN WITH SUPPLEMENTAL PLAQUE INSTALLATION IN FILL SECTION

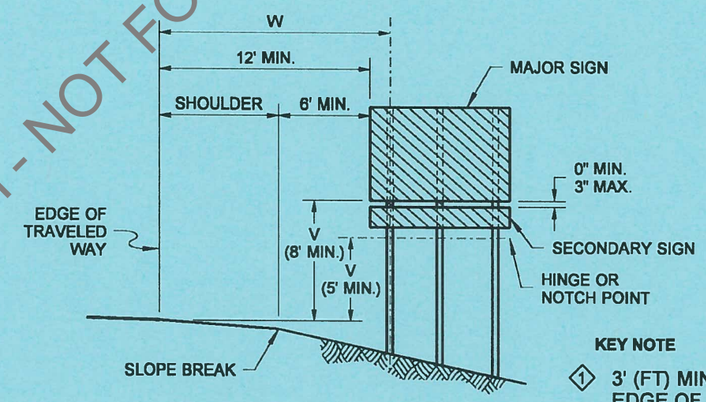

KEY NOTE

1. 3' (FT) MIN. FROM ANY POINT ALONG BOTTOM EDGE OF SIGN PANEL TO THE GROUND

GUIDE OR DIRECTIONAL SIGN WITH SECONDARY SIGN INSTALLATION ON EXPRESSWAYS AND FREEWAYS

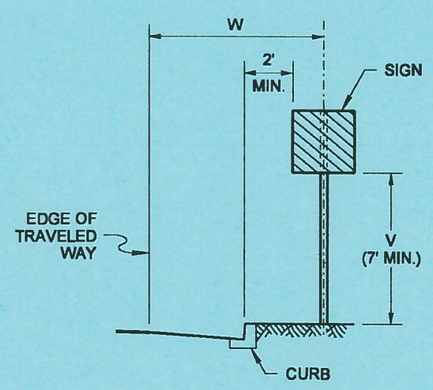

SIGN INSTALLATION IN CURB SECTION

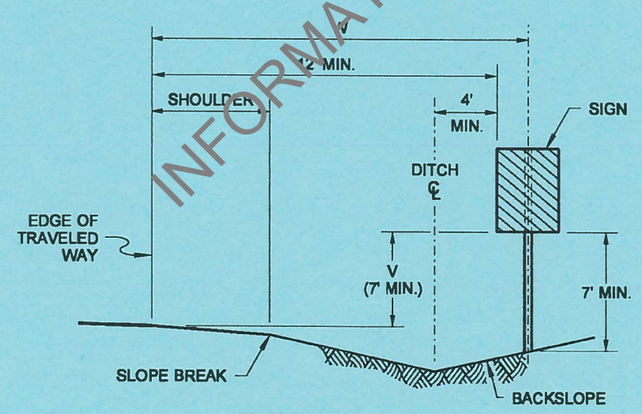

SIGN INSTALLATION IN DITCH SECTION

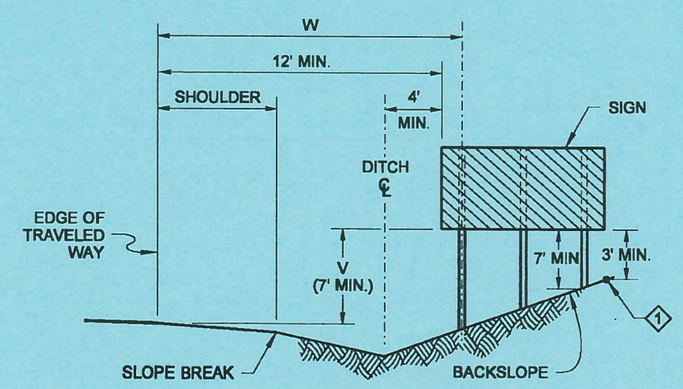

MULTIPLE SIGN POST INSTALLATION IN DITCH SECTION

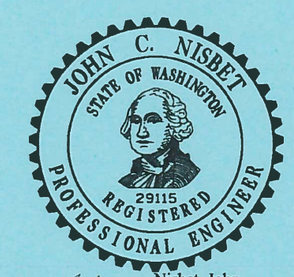

Nisbet, John
Jun 22 2015 9:43 AM
cosign

GROUND-MOUNTED SIGN PLACEMENT

STANDARD PLAN G-20.10-02

SHEET 1 OF 1 SHEET

APPROVED FOR PUBLICATION
Jun 23 2015 7:35 AM
cosign
STATE DESIGN ENGINEER
Washington State Department of Transportation

INFORMATIONAL COPY ONLY - NOT FOR BIDDING

DRAWN BY: FERN LIDDELL

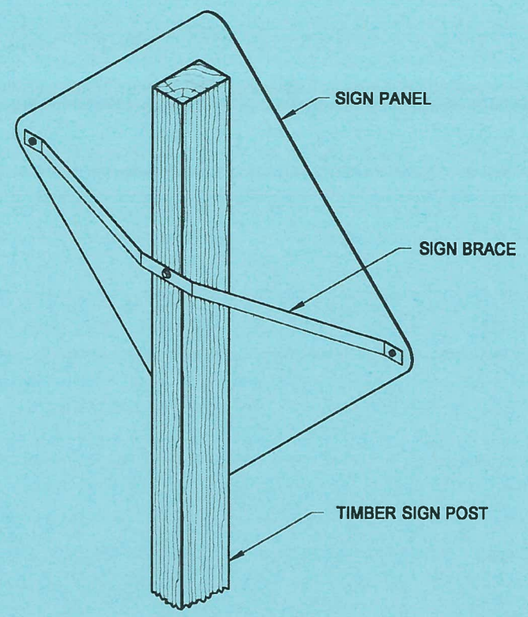

SIGN BRACE ON TIMBER POST

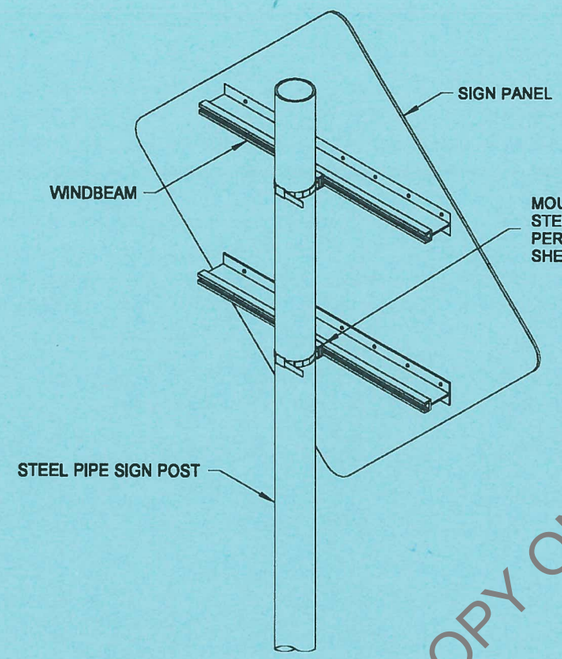

SIGN BRACE ON STEEL PIPE

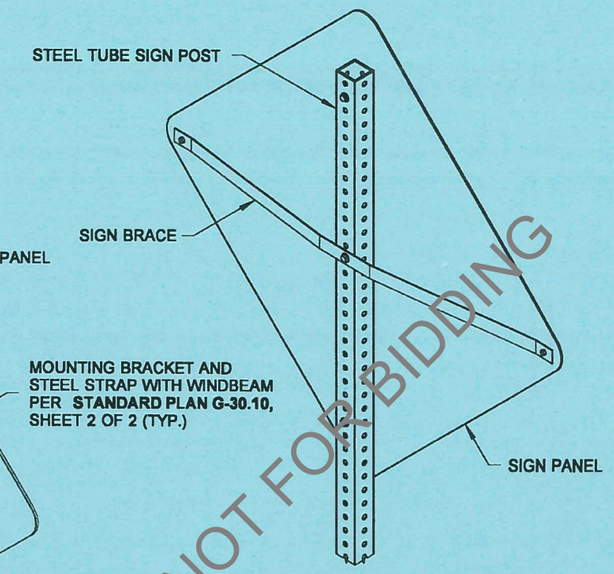

SIGN BRACE ON STEEL TUBE

NOTES

1. Mounting brackets with steel straps shall be a stainless steel band and buckle system product or an approved equal. Mounting brackets shall be one bolt, flared leg; steel straps shall be 3/4" (in) wide and 0.030" (in) thick.
2. Sign braces are required for sign widths of 48" (in) or greater. For sign widths of 36" (in), the sign braces are only installed when specified in the contract.
3. Sign braces are typically necessary on large sign panels that are exposed to high winds, traffic generated wind buffeting, or when snow thrown from plows might impact the sign.
4. A nylon washer shall be placed between the sign and the steel washer when the sign face has Type III, IV,VIII or IX sheeting.
5. Signs 48" (in) or greater can be pinned together, back to back.
6. For signs installed back to back on a single post, no bracing is required.

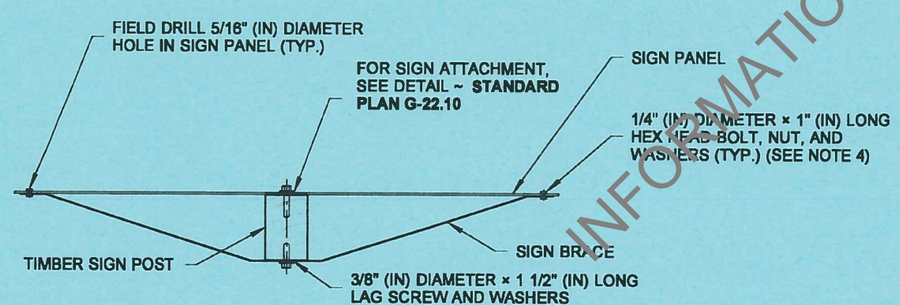

PLAN

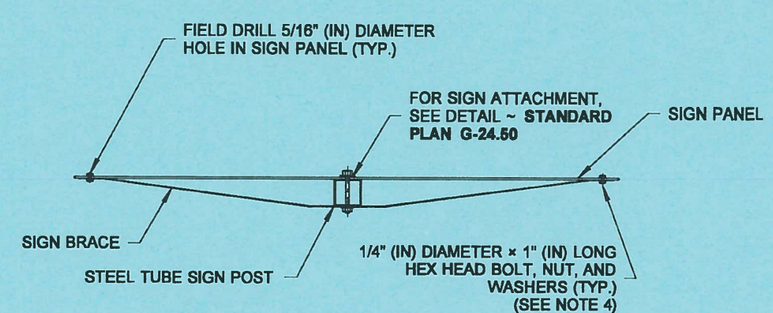

PLAN

INFORMATIONAL COPY ONLY- NOT FOR BIDDING

JOHN C. NISBET
STATE OF WASHINGTON
29115
REGISTERED
PROFESSIONAL ENGINEER

Nisbet, John
Jun 22 2015 9:50 AM
cosign

SIGN BRACING

STANDARD PLAN G-50.10-02

SHEET 1 OF 2 SHEETS

APPROVED FOR PUBLICATION
Carpenter, Jeff
Jun 23 2015 7:30 AM
STATE DESIGN ENGINEER
Washington State Department of Transportation

DRAWN BY: FERN LIDDELL

SIGN BRACE DIMENSIONS				
	SIGN TYPE			
	YIELD	DIAMOND-SHAPED	OTHERS	
A	1/3 SIGN WIDTH - 1 3/4"	1/2 SIGN WIDTH - 2 1/4"	1/2 SIGN WIDTH - 1"	
	SIGN POST TYPE			
	4×6 OR 6×6 TIMBER POST	6×8 TIMBER POST	3" DIAM. STEEL PIPE	2 1/2" SQUARE TUBE
B	5 1/2"	7 1/2"	4 3/4"	2 1/2"

NOTE

1. For sign installations on round steel posts, see **Standard Plan G-30.10,** sheet 2 of 2.

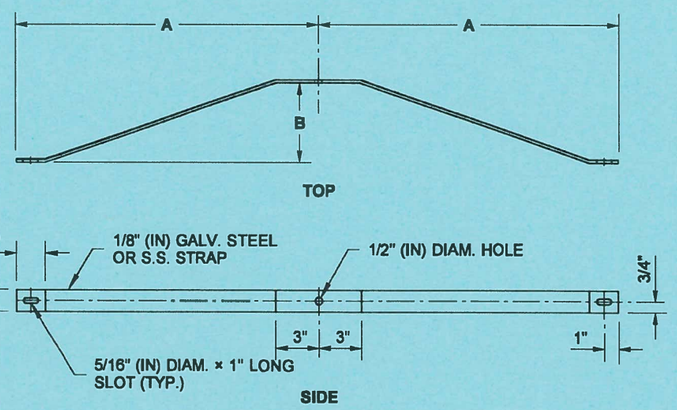

SIGN BRACE DETAIL

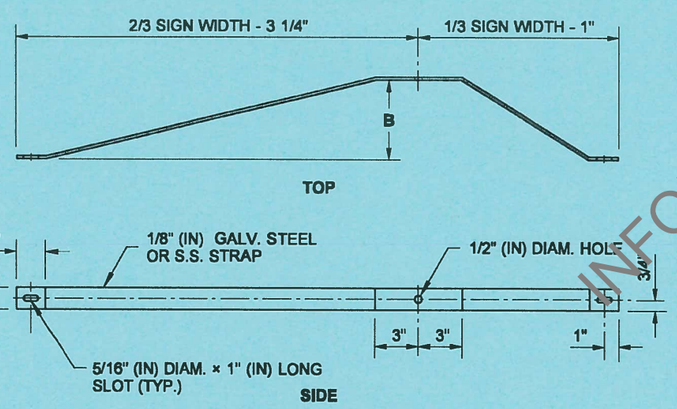

NO PASSING ZONE SIGN BRACE DETAIL

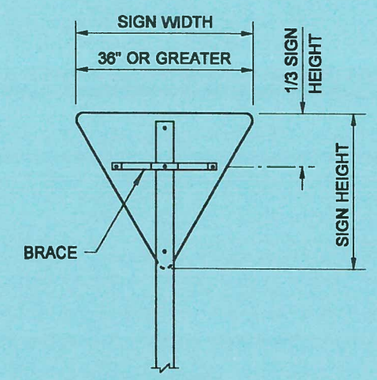

YIELD SIGN

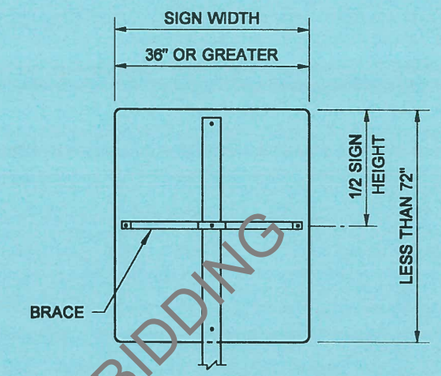

SMALL RECTANGULAR SIGN

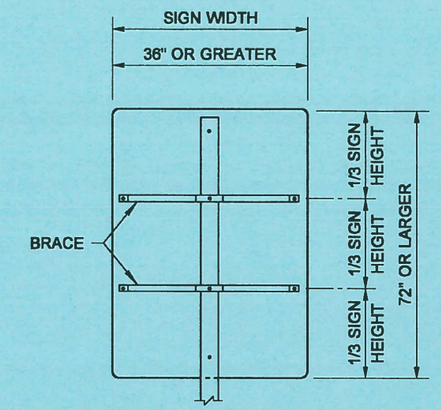

LARGE RECTANGULAR SIGN

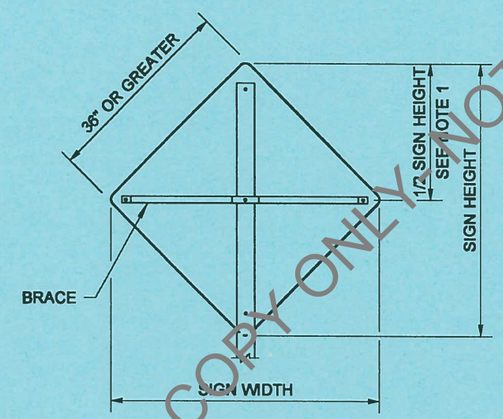

DIAMOND-SHAPED SIGN

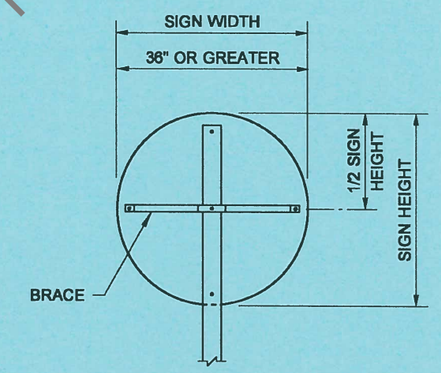

RAILROAD WARNING SIGN

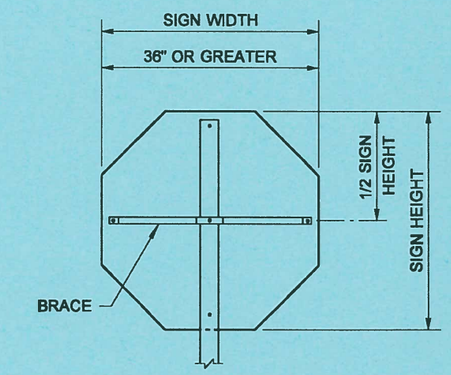

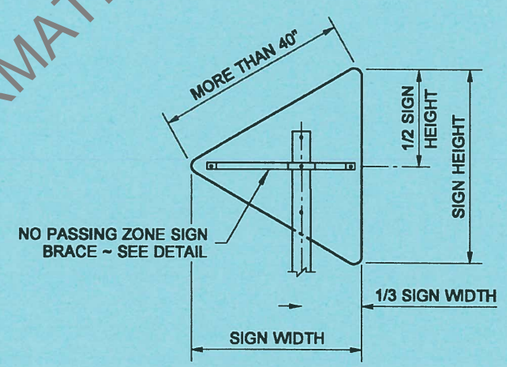

NO PASSING ZONE SIGN

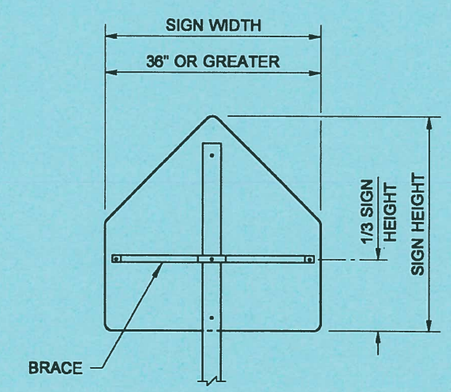

SCHOOL ZONE SIGN

SIGN BRACE PLACEMENT

INFORMATIONAL COPY ONLY NOT FOR BIDDING

JOHN C. NISBET
STATE OF WASHINGTON
29115
REGISTERED
PROFESSIONAL ENGINEER

Nisbet, John
Jun 22 2015 9:51 AM
cosign

SIGN BRACING

STANDARD PLAN G-50.10-02

SHEET 2 OF 2 SHEETS

APPROVED FOR PUBLICATION
Carpenter, Jeff
Jun 23 2015 7:31 AM
cosign
STATE DESIGN ENGINEER
Washington State Department of Transportation