GRANT COUNTY
PUBLIC WORKS DEPARTMENT

Jeff Tincher, P.E.
Director of Public Works and
County Road Engineer
Ephrata (509) 754-6082

Jerome Wawers
Assistant Director of Public Works
Ephrata (509) 754-6082

Bob Bersanti
Design/Construction Engineer
Ephrata (509) 754-6082

Jason Collings, Supervisor
Solid Waste
Ephrata (509) 754-4319

Ed Lowry
Supervisor
Road District #1
Ephrata (509) 754-6586

Mike Detrollo, Supervisor
Road District #2
Moses Lake (509) 765-4172

John Brissey, Supervisor
Road District #3
Quincy (509) 787-2321

Andrew Booth, Supervisor
Bridges
Ephrata (509) 754-6082

CONTRACT PROVISIONS and PLANS

For Construction of:

4-NE ROAD RECONSTRUCTION PROJECT
CRP 16-09
Rap Project # 1315-03

Sealed Bids will be opened on
May 21, 2019
at
1:30 P.M.
at the Office of the
Board of County Commissioners
Commissioners Hearing Room
P.O. Box 37
35 C Street NW
Ephrata, Washington 98823

INFORMATIONAL COPY ONLY - NOT FOR BIDDING

NOTICE TO CONTRACTORS

Sealed bids, plainly marked **"BID FOR 4-NE ROAD RECONSTRUCTION PROJECT, CRP 16-09"**, will be received by Grant County at the Office of the Board of County Commissioners located in the County Courthouse, P.O. Box 37, 35 C Street NW – Room 206, Ephrata, WA, 98823, until **1:30 P.M., Tuesday, May 21, 2019** and will then and there be opened and publicly read for the construction of the improvements.

All bid proposals shall be accompanied by a bid proposal deposit in cash, certified check, cashier's check, or surety bond in an amount equal to five percent (5%) of the amount of such bid proposal. No conditional bid bond will be accepted. Should the successful bidder fail to enter into such contract and furnish a satisfactory performance bond within the time stated in the specifications, the bid proposal deposit shall be forfeited to Grant County.

Maps, plans and specifications may be purchased from the office of the County Engineer, 124 Enterprise St. S.E., Ephrata, WA 98823, upon payment of the amount of $25.00 (non-refundable).

Informational copies of the maps, plans and specifications are on file for inspection at the Grant County Public Works Building, 124 Enterprise St. S.E., Ephrata, WA 98823, and in various plan centers located in Washington.

The Board of County Commissioners of Grant County, Washington, reserves the right to reject any and all bids. The award of this contract, if made, will be to the lowest responsible bidder.

The improvement for which bids will be received follows:

4-NE ROAD RECONSTRUCTION PROJECT – CRP 16-09
This contract provides for the reconstruction of 4.38 miles of two lane county road in Grant County, WA, and includes roadway excavation, embankment compaction, crushed surfacing base course, crushed surfacing topo course, guardrail, seeding and fertilizing, and other work all in accordance with the attached Contract Plans, these Contract Provisions and the Standard Specifications.

INFORMATIONAL COPY ONLY - NOT FOR BIDDING

GRANT COUNTY PUBLIC WORKS

CRP 16-09

4-NE ROAD RECONSTRUCTION PROJECT

INFORMATIONAL COPY ONLY - NOT FOR BIDDING

NOTICE TO ALL PLANHOLDERS

Grant County Department of Public Works may be contacted to answer questions regarding these bid documents and to show this project to prospective bidders is:
Grant County Department of Public Works

124 Enterprise St. S.E.
Ephrata, WA. 98823
Phone: (509)754-6082 Fax (509)754-6087

As the Engineer in direct responsible charge of developing these contract provisions, I certify these provisions have been developed or incorporated into this project under my direct supervision, or as a result of certified recommendations provided by other licensed professionals.

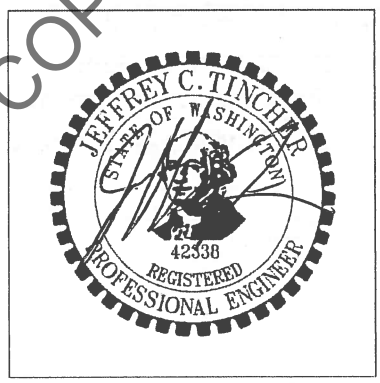

Jeffrey C. Tincher P.E. 5/2/2019
County Road Engineer Date

BIDDER'S CHECK LIST

The bidder's attention is especially called to the following forms which must be executed in full as required:

(A) PROPOSAL

The unit prices bid must be shown in the spaces provided. Show unit prices in figures only. All extensions of the unit prices must be shown in the spaces provided.

(B) PROPOSAL SIGNATURE SHEET

To be filled in and signed by the bidder.

(C) STATEMENT OF CONTRACTOR QUALIFICATIONS

To be filled in and signed by the bidder.

(D) CERTIFICATION OF COMPLIANCE WITH WAGE PAYMENT STATUTES

To be filled in and signed by the bidder.

(E) BID BOND

This form is to be executed by the bidder and his surety company unless the bid is accompanied by cash, certified or cashier's check. The amount of this bond shall be equal to 5% of the total amount bid and may be shown in dollars or on a percentage basis.

(F) LOCAL AGENCY SUBCONTRACTOR LIST

To be filled in by the contractor.

The following forms are to be executed after the contract is awarded:

(G) CONTRACT

This agreement is to be executed by the successful bidder, his surety company, and Grant County.

(H) CONTRACT BOND

To be executed by the successful bidder and his surety company.

INFORMATIONAL COPY ONLY - NOT FOR BIDDING

TABLE OF CONTENTS

AMENDMENTS TO THE STANDARD SPECIFICATIONS 1

HOT MIX ASPHALT 13

DIVISION 7 41

DRAINAGE STRUCTURES, STORM SEWERS, SANITARY SEWERS, WATER MAINS, AND CONDUITS 41

SPECIAL PROVISIONS 2

DIVISION 1 GENERAL REQUIREMENTS 2

DIVISION 2 EARTHWORK 28

DIVISION 4 BASES 29

DIVISION 8 MISCELLANEOUS CONSTRUCTION 30

DIVISION 9 MATERIALS 32

Proposal ..... Proposal Page 1 - 10

Contract ..... Contract Page 1 -4

Appendices

Wage Rates-State
Construction Sign Plan
Plans
Standard Plans

INFORMATIONAL COPY ONLY - NOT FOR BIDDING

INTRODUCTION

The following Amendments and Special Provisions shall be used in conjunction with the 2018 Standard Specifications for Road, Bridge, and Municipal Construction.

AMENDMENTS TO THE STANDARD SPECIFICATIONS

The following Amendments to the Standard Specifications are made a part of this contract and supersede any conflicting provisions of the Standard Specifications. For informational purposes, the date following each Amendment title indicates the implementation date of the Amendment or the latest date of revision.

Each Amendment contains all current revisions to the applicable section of the Standard Specifications and may include references which do not apply to this particular project.

Section 1-01, Definitions and Terms
August 6, 2018

1-01.3 Definitions

The following new term and definition is inserted before the definition for "Shoulder":

Sensitive Area – Natural features, which may be previously altered by human activity, that are present on or adjacent to the project location and protected, managed, or regulated by local, tribal, state, or federal agencies.

The following new term and definition is inserted after the definition for "Working Drawings":

WSDOT Form – Forms developed and maintained by WSDOT that are required or available for use on a project. These forms can be downloaded from the forms catalogue at:

http://wsdot.wa.gov/forms/pdfForms.html

Section 1-02, Bid Procedures and Conditions
October 30, 2018

1-02.4(1) General

This section is supplemented with the following:

Prospective Bidders are advised that the Contracting Agency may include a partially completed Washington State Department of Ecology (Ecology) Transfer of Coverage (Ecology Form ECY 020-87a) for the Construction Stormwater General Permit (CSWGP) as part of the Bid Documents. When the Contracting Agency requires the transfer of coverage of the CSWGP to the Contractor, an informational copy of the Transfer of Coverage and the associated CSWGP will be included in the appendices. As a condition of Section 1-03.3, the Contractor is required to complete sections I, III, and VIII of the Transfer of Coverage and return the form to the Contracting Agency.

The Contracting Agency is responsible for compliance with the CSWGP until the end of day that the Contract is executed. Beginning on the day after the Contract is executed, the

INFORMATIONAL COPY ONLY - NOT FOR BIDDING

Contractor shall assume complete legal responsibility for compliance with the CSWGP and full implementation of all conditions of the CSWGP as they apply to the Contract Work.

1-02.5 Proposal Forms

The first sentence of the first paragraph is revised to read:

At the request of a Bidder, the Contracting Agency will provide a physical Proposal Form for any project on which the Bidder is eligible to Bid.

1-02.6 Preparation of Proposal

Item number 1 of the second paragraph is revised to read:

1. A unit price for each item (omitting digits more than two places to the right of the decimal point),

In the third sentence of the fourth paragraph, "WSDOT Form 422-031" is revised to read "WSDOT Form 422-031U".

The following new paragraph is inserted before the last paragraph:

The Bidder shall submit with their Bid a completed Contractor Certification Wage Law Compliance form (WSDOT Form 272-009). Failure to return this certification as part of the Bid Proposal package will make this Bid Nonresponsive and ineligible for Award. A Contractor Certification of Wage Law Compliance form is included in the Proposal Forms.

Section 1-03, Award and Execution of Contract
January 2, 2018

1-03.3 Execution of Contract

The first paragraph is revised to read:

Within 20 calendar days after the Award date, the successful Bidder shall return the signed Contracting Agency-prepared Contract, an insurance certification as required by Section 1-07.18, a satisfactory bond as required by law and Section 1-03.4, the Transfer of Coverage form for the Construction Stormwater General Permit with sections I, III, and VIII completed when provided, and shall be registered as a contractor in the state of Washington.

1-03.5 Failure to Execute Contract

The first sentence is revised to read:

Failure to return the insurance certification and bond with the signed Contract as required in Section 1-03.3, or failure to provide Disadvantaged, Minority or Women's Business Enterprise information if required in the Contract, or failure or refusal to sign the Contract, or failure to register as a contractor in the state of Washington, or failure to return the completed Transfer of Coverage for the Construction Stormwater General Permit to the Contracting Agency when provided shall result in forfeiture of the proposal bond or deposit of this Bidder.

INFORMATIONAL COPY ONLY - NOT FOR BIDDING

Section 1-05, Control of Work
August 6, 2018

1-05.5 Vacant
This section, including title, is revised to read:

1-05.5 Tolerances
Geometrical tolerances shall be measured from the points, lines, and surfaces defined in Contract documents.

A plus (+) tolerance increases the amount or dimension to which it applies, or raises a deviation from level. A minus (-) tolerance decreases the amount or dimension to which it applies, or lowers a deviation from level. Where only one signed tolerance is specified (+ or -), there is no specified tolerance in the opposing direction.

Tolerances shall not be cumulative. The most restrictive tolerance shall control.

Tolerances shall not extend the Work beyond the Right of Way or other legal boundaries identified in the Contract documents. If application of tolerances causes the extension of the Work beyond the Right of Way or legal boundaries, the tolerance shall be reduced for that specific instance.

Tolerances shall not violate other Contract requirements. If application of tolerances causes the Work to violate other Contract requirements, the tolerance shall be reduced for that specific instance. If application of tolerances causes conflicts with other components or aspects of the Work, the tolerance shall be reduced for that specific instance.

1-05.9 Equipment
The following new paragraph is inserted before the first paragraph:

Prior to mobilizing equipment on site, the Contractor shall thoroughly remove all loose dirt and vegetative debris from drive mechanisms, wheels, tires, tracks, buckets and undercarriage. The Engineer will reject equipment from the site until it returns clean.

This section is supplemented with the following:

Upon completion of the Work, the Contractor shall completely remove all loose dirt and vegetative debris from equipment before removing it from the job site.

Section 1-06, Control of Material
January 7, 2019

1-06.1(3) Aggregate Source Approval (ASA) Database
This section is supplemented with the following:

Regardless of status of the source, whether listed or not listed in the ASA database the source owner may be asked to provide testing results for toxicity in accordance with Section 9-03.21(1).

1-06.2(2)D Quality Level Analysis
This section is supplemented with the following new subsection:

INFORMATIONAL COPY ONLY - NOT FOR BIDDING

1-06.2(2)D5 Quality Level Calculation – HMA Compaction

The procedures for determining the quality level and pay factor for HMA compaction are as follows:

1. Determine the arithmetic mean, X_m, for compaction of the lot:

$$X_m = \frac{\sum x}{n}$$

Where:
x = individual compaction test values for each sublot in the lot.
$\sum x$ = summation of individual compaction test values
n = total number test values

2. Compute the sample standard deviation, "S", for each constituent:

$$S = \left[\frac{n\sum x^2 - (\sum x)^2}{n(n-1)} \right]^{\frac{1}{2}}$$

Where:
$\sum x^2$ = summation of the squares of individual compaction test values
$(\sum x)^2$ = summation of the individual compaction test values squared

3. Compute the lower quality index (Q_L):

$$Q_L = \frac{X_m - LSL}{S}$$

Where:
LSL = 92.0

4. Determine P_L (the percent within the lower Specification limit which corresponds to a given Q_L) from Table 1. For negative values of Q_L, P_L is equal to 100 minus the table P_L. If the value of Q_L does not correspond exactly to a figure in the table, use the next higher value.

5. Determine the quality level (the total percent within Specification limits):

Quality Level = P_L

6. Using the quality level from step 5, determine the composite pay factor (CPF) from Table 2.

7. If the CPF determined from step 6 is 1.00 or greater: use that CPF for the compaction lot; however, the maximum HMA compaction CPF using an LSL = 92.0 shall be 1.05.

8. If the CPF from step 6 is not 1.00 or greater: repeat steps 3 through 6 using an LSL = 91.5. The value thus determined shall be the HMA compaction CPF for that lot; however, the maximum HMA compaction CPF using an LSL = 91.5 shall be 1.00.

INFORMATIONAL COPY ONLY - NOT FOR BIDDING

1-06.2(2)D1 Quality Level Analysis

The following new sentence is inserted after the first sentence:

> The quality level calculations for HMA compaction are completed using the formulas in Section 1-06.2(2)D5.

1-06.2(2)D4 Quality Level Calculation

The first paragraph (excluding the numbered list) is revised to read:

> The procedures for determining the quality level and pay factors for a material, other than HMA compaction, are as follows:

1-06.6 Recycled Materials

The first three sentences of the second paragraph are revised to read:

> The Contractor shall submit a Recycled Material Utilization Plan on WSDOT Form 350-075A within 30 calendar days after the Contract is executed. The plan shall provide the Contractor's anticipated usage of recycled concrete aggregates for meeting the requirements of these Specifications. The quantity of recycled concrete aggregate will be provided in tons and as a percentage of the Plan quantity for eligible material listed in Section 9-03.21(1)E Table on Maximum Allowable percent (By Weight) of Recycled Material.

The last paragraph is revised to read:

> Within 30 calendar days after Physical Completion, the Contractor shall report the quantity of recycled concrete aggregates that were utilized in the construction of the project for each eligible item listed in Section 9-03.21(1)E. The Contractor's report shall be provided on WSDOT Form 350-075A, Recycled Materials Reporting.

1-06.6(1)A General

Item 1(a) in the second paragraph is revised to read:

> a. The estimated costs for the Work for each material with 25 percent recycled concrete aggregate. The cost estimate shall include for each material a documented price quote from the supplier with the lowest total cost for the Work.

Section 1-07, Legal Relations and Responsibilities to the Public
April 1, 2019

1-07.5 Environmental Regulations

This section is supplemented with the following new subsections:

1-07.5(5) U.S. Army Corps of Engineers

When temporary fills are permitted, the Contractor shall remove fills in their entirety and the affected areas returned to pre-construction elevations.

If a U.S. Army Corps of Engineers permit is noted in Section 1-07.6 of the Special Provisions, the Contractor shall retain a copy of the permit or the verification letter (in the case of a Nationwide Permit) on the worksite for the life of the Contract. The Contractor shall provide copies of the permit or verification letter to all subcontractors involved with the authorized work prior to their commencement of any work in waters of the U.S.

INFORMATIONAL COPY ONLY - NOT FOR BIDDING

1-07.5(6) U.S. Fish/Wildlife Services and National Marine Fisheries Service

The Contracting Agency will provide fish exclusion and handling services if the Work dictates. However, if the Contractor discovers any fish stranded by the project and a Contracting Agency biologist is not available, they shall immediately release the fish into a flowing stream or open water.

1-07.5(1) General

The first sentence is deleted and replaced with the following:

No Work shall occur within areas under the jurisdiction of resource agencies unless authorized in the Contract.

The third paragraph is deleted.

1-07.5(2) State Department of Fish and Wildlife

This section is revised to read:

In doing the Work, the Contractor shall:

1. Not degrade water in a way that would harm fish, wildlife, or their habitat.
2. Not place materials below or remove them from the ordinary high water line except as may be specified in the Contract.
3. Not allow equipment to enter waters of the State except as specified in the Contract.
4. Revegetate in accordance with the Plans, unless the Special Provisions permit otherwise.
5. Prevent any fish-threatening silt buildup on the bed or bottom of any body of water.
6. Ensure continuous stream flow downstream of the Work area.
7. Dispose of any project debris by removal, burning, or placement above high-water flows.
8. Immediately notify the Engineer and stop all work causing impacts, if at any time, as a result of project activities, fish are observed in distress or a fish kill occurs.

If the Work in (1) through (3) above differs little from what the Contract requires, the Contracting Agency will measure and pay for it at unit Contract prices. But if Contract items do not cover those areas, the Contracting Agency will pay pursuant to Section 1-09.4. Work in (4) through (8) above shall be incidental to Contract pay items.

1-07.5(3) State Department of Ecology

This section is revised to read:

In doing the Work, the Contractor shall:

1. Comply with Washington State Water Quality Standards.

INFORMATIONAL COPY ONLY - NOT FOR BIDDING

2. Perform Work in such a manner that all materials and substances not specifically identified in the Contract documents to be placed in the water do not enter waters of the State, including wetlands. These include, but are not limited to, petroleum products, hydraulic fluid, fresh concrete, concrete wastewater, process wastewater, slurry materials and waste from shaft drilling, sediments, sediment-laden water, chemicals, paint, solvents, or other toxic or deleterious materials.

3. Use equipment that is free of external petroleum-based products.

4. Remove accumulations of soil and debris from drive mechanisms (wheels, tracks, tires) and undercarriage of equipment prior to using equipment below the ordinary high water line.

5. Clean loose dirt and debris from all materials placed below the ordinary high water line. No materials shall be placed below the ordinary high water line without the Engineer's concurrence.

6. When a violation of the Construction Stormwater General Permit (CSWGP) occurs, immediately notify the Engineer and fill out WSDOT Form 422-011, Contractor ECAP Report, and submit the form to the Engineer within 48 hours of the violation.

7. Once Physical Completion has been given, prepare a Notice of Termination (Ecology Form ECY 020-87) and submit the Notice of Termination electronically to the Engineer in a PDF format a minimum of 7 calendar days prior to submitting the Notice of Termination to Ecology.

8. Transfer the CSWGP coverage to the Contracting Agency when Physical Completion has been given and the Engineer has determined that the project site is not stabilized from erosion.

9. Submit copies of all correspondence with Ecology electronically to the Engineer in a PDF format within four calendar days.

1-07.5(4) Air Quality

This section is revised to read:

The Contractor shall comply with all regional clean air authority and/or State Department of Ecology rules and regulations.

The air quality permit process may include additional State Environment Policy Act (SEPA) requirements. Contractors shall contact the appropriate regional air pollution control authority well in advance of beginning Work.

When the Work includes demolition or renovation of any existing facility or structure that contains Asbestos Containing Material (ACM) and/or Presumed Asbestos-Containing Material (PACM), the Contractor shall comply with the National Emission Standards for Hazardous Air Pollutants (NESHAP).

Any requirements included in Federal and State regulations regarding air quality that applies to the "owner or operator" shall be the responsibility of the Contractor.

1-07.7(1) General

The first sentence of the third paragraph is revised to read:

INFORMATIONAL COPY ONLY - NOT FOR BIDDING

When the Contractor moves equipment or materials on or over Structures, culverts or pipes, the Contractor may operate equipment with only the load-limit restrictions in Section 1-07.7(2).

The first sentence of the last paragraph is revised to read:

Unit prices shall cover all costs for operating over Structures, culverts and pipes.

1-07.9(1) General

The last sentence of the sixth paragraph is revised to read:

Generally, the Contractor initiates the request by preparing standard form 1444 Request for Authorization of Additional Classification and Rate, available at https://www.dol.gov/whd/recovery/dbsurvey/conformance.htm, and submitting it to the Engineer for further action.

1-07.9(2) Posting Notices

The second sentence of the first paragraph (up until the colon) is revised to read:

The Contractor shall ensure the most current edition of the following are posted:

The revision dates are deleted from all items in the numbered list.

The following new items are inserted after item number 1:

2. **Mandatory Supplement to EEOC P/E-1** published by US Department of Labor. Post for projects with federal-aid funding.

3. **Pay Transparency Nondiscrimination Provision** published by US Department of Labor. Post for projects with federal-aid funding.

Item number 2 through 12 are renumbered to 4 through 14, respectively.

1-07.11(2) Contractual Requirements

In this section, "creed" is revised to read "religion".

Item numbers 1 through 9 are revised to read 2 through 10, respectively.

After the preceding Amendment is applied, the following new item number 1 is inserted:

1. The Contractor shall maintain a Work site that is free of harassment, humiliation, fear, hostility and intimidation at all times. Behaviors that violate this requirement include but are not limited to:

   a. Persistent conduct that is offensive and unwelcome.

   b. Conduct that is considered to be hazing.

   c. Jokes about race, gender, or sexuality that are offensive.

   d. Unwelcome, unwanted, rude or offensive conduct or advances of a sexual nature which interferes with a person's ability to perform their job or creates an intimidating, hostile, or offensive work environment.

INFORMATIONAL COPY ONLY - NOT FOR BIDDING

e. Language or conduct that is offensive, threatening, intimidating or hostile based on race, gender, or sexual orientation.

f. Repeating rumors about individuals in the Work Site that are considered to be harassing or harmful to the individual's reputation.

1-07.11(5) Sanctions

This section is supplemented with the following:

Immediately upon the Engineer's request, the Contractor shall remove from the Work site any employee engaging in behaviors that promote harassment, humiliation, fear or intimidation including but not limited to those described in these specifications.

1-07.11(6) Incorporation of Provisions

The first sentence is revised to read:

The Contractor shall include the provisions of Section 1-07.11(2) Contractual Requirements (1) through (5) and the Section 1-07.11(5) Sanctions in every subcontract including procurement of materials and leases of equipment.

1-07.15(1) Spill Prevention, Control, and Countermeasures Plan

The last sentence of the first paragraph is revised to read:

An SPCC Plan template and guidance information is available at http://www.wsdot.wa.gov/environment/technical/disciplines/hazardous-materials/spill-prevent-report.

1-07.16(2)A Wetland and Sensitive Area Protection

The first sentence of the first paragraph is revised to read:

Existing wetland and other sensitive areas, where shown in the Plans or designated by the Engineer, shall be saved and protected through the life of the Contract.

1-07.18 Public Liability and Property Damage Insurance

Item number 1 is supplemented with the following new sentence:

This policy shall be kept in force from the execution date of the Contract until the Physical Completion Date.

Section 1-08, Prosecution and ProgressJanuary 7, 2019

1-08.1 Subcontracting

The first sentence of the seventh paragraph is revised to read:

All Work that is not performed by the Contractor will be considered as subcontracting except: (1) purchase of sand, gravel, crushed stone, crushed slag, batched concrete aggregates, ready-mix concrete, off-site fabricated structural steel, other off-site fabricated items, and any other materials supplied by established and recognized commercial plants; or (2) delivery of these materials to the Work site in vehicles owned or operated by such plants or by recognized independent or commercial hauling companies hired by those commercial plants.

The following new paragraph is inserted after the seventh paragraph:

INFORMATIONAL COPY ONLY - NOT FOR BIDDING

The Contractor shall not use businesses (material suppliers, vendors, subcontractors, etc.) with federal purchasing exclusions. Businesses with exclusions are identified using the System for Award Management web page at www.SAM.gov.

1-08.5 Time for Completion

Item number 2 of the sixth paragraph is supplemented with the following:

f. A copy of the Notice of Termination sent to the Washington State Department of Ecology (Ecology); the elapse of 30 calendar days from the date of receipt of the Notice of Termination by Ecology; and no rejection of the Notice of Termination by Ecology. This requirement will not apply if the Construction Stormwater General Permit is transferred back to the Contracting Agency in accordance with Section 8-01.3(16).

1-08.7 Maintenance During Suspension

The fifth paragraph is revised to read:

The Contractor shall protect and maintain all other Work in areas not used by traffic. All costs associated with protecting and maintaining such Work shall be the responsibility of the Contractor.

Section 1-09, Measurement and Payment
August 6, 2018

1-09.2(1) General Requirements for Weighing Equipment

The last paragraph is supplemented with the following:

When requested by the Engineer, the Contractor's representative shall collect the tickets throughout the day and provide them to the Engineer's designated receiver, not later than the end of shift, for reconciliation. Tickets for loads not verified as delivered will receive no pay.

1-09.2(2) Specific Requirements for Batching Scales

The last sentence of the first paragraph is revised to read:

Batching scales used for concrete or hot mix asphalt shall not be used for batching other materials.

1-09.10 Payment for Surplus Processed Materials

The following sentence is inserted after the first sentence of the second paragraph:

For Hot Mix Asphalt, the Plan quantity and quantity used will be adjusted for the quantity of Asphalt and quantity of RAP or other materials incorporated into the mix.

Section 2-01, Clearing, Grubbing, and Roadside Cleanup
April 1, 2019

2-01.2(3) Disposal Method No. 3 – Chipping

Item number 2 of the first paragraph is revised to read:

INFORMATIONAL COPY ONLY - NOT FOR BIDDING

2. Chips shall be disposed outside of sensitive areas, and in areas that aren't in conflict with permanent Work.

Section 2-02, Removal of Structures and Obstructions
April 2, 2018

2-02.3(3) Removal of Pavement, Sidewalks, Curbs, and Gutters

In item number 3 of the first paragraph, the second sentence is revised to read:

> For concrete pavement removal, a second vertical full depth relief saw cut offset 12 to 18 inches from and parallel to the initial saw cut is also required, unless the Engineer allows otherwise.

Section 2-03, Roadway Excavation and Embankment
April 1, 2019

2-03.3(14)F Displacement of Unsuitable Foundation Materials

This section, including title, is revised to read:

> **2-03.3(14)F Vacant**

Section 2-09, Structure Excavation
April 1, 2019

2-09.2 Materials

In the first paragraph, the references to "Portland Cement" and "Aggregates for Portland Cement Concrete" are revised to read:

Cement	9-01
Fine Aggregate for Concrete	9-03.1(2)

2-09.3(3)B Excavation Using Open Pits – Extra Excavation

The last two paragraphs are deleted and replaced with the following:

> The excavation height (Ht) shall be calculated within a vertical plane as the difference between the lowest elevation in the excavation and the highest elevation of the ground surface immediately adjacent to the excavation. Pavement thickness and other surface treatments existing at the time of the excavation shall be included in the height calculation.
>
> **Submittals and Design Requirements**
> Excavations 4-feet and less in height do not require design and submittals. The Contractor shall provide a safe work environment and shall execute the work in a manner that does not damage adjacent pavements, utilities, or structures. If the Engineer determines the Contractor's work may potentially affect adjacent traffic, pavements, utilities, or structures, the Engineer may request a Type 1 Working Drawing from the Contractor. The Contractor shall explain in the Type 1 Working Drawing how the Engineer's concerns will be addressed, why infrastructure will not be damaged by the work, and how worker safety will be preserved.

INFORMATIONAL COPY ONLY - NOT FOR BIDDING

For excavations that have soil types and slope geometries defined in WAC 296-155 part N and are between 4-feet and 20-feet in height, the Contractor shall submit Type 2 Working Drawings. Required submittal elements include, at a minimum, the following:

1. A plan view showing the limits of the excavation and its relationship to traffic, structures, utilities and other pertinent project elements. If the stability of the excavation requires no-load zones or equipment setback distances, those shall be shown on the plan view.

2. A typical or controlling cross section showing the proposed excavation, original ground line, and locations of traffic, existing structures, utilities, site constraints, surcharge loads, or other conditions that could affect the stability of the slope. If the stability of the excavation requires no-load zones or equipment setback distances, those shall be shown in cross section.

3. A summary clearly describing subsurface conditions, soil type for WAC 296-155 part N, and groundwater conditions, sequencing considerations, and governing assumptions.

Where WAC 296-155 part N requires an engineer's design, the Contractor shall submit Type 2E Working Drawings. Required submittal elements include, at a minimum, the three items above and the following additional items:

4. Supporting calculations for the design of the excavation, the soil and material properties selected for design, and the justification for the selection for those properties, in accordance with the WSDOT *Geotechnical Design Manual* M 46-03.

5. Safety factors, or load and resistance factors used, and justification for their selection, in accordance with the WSDOT *Geotechnical Design Manual* M 46-03, and referenced AASHTO design manuals.

6. A monitoring plan to evaluate the excavation performance throughout its design life.

7. Any supplemental subsurface explorations made by the Contractor to meet the requirements for geotechnical design of excavation slopes, in accordance with the WSDOT *Geotechnical Design Manual* M 46-03.

2-09.3(3)D Shoring and Cofferdams

The first sentence of the sixth paragraph is revised to read:

Structural shoring and cofferdams shall be designed for conditions stated in this Section using methods shown in Division I Section 5 of the AASHTO *Standard Specifications for Highway Bridges* Seventeenth Edition – 2002 for allowable stress design, or the AASHTO *LRFD Bridge Design Specifications* for load and resistance factor design.

Section 3-01, Production from Quarry and Pit Sites
April 2, 2018

3-01.1 Description

The first paragraph is revised to read:

This Work shall consist of manufacturing and producing crushed and screened aggregates including pit run aggregates of the kind, quality, and grading specified for use in the

INFORMATIONAL COPY ONLY - NOT FOR BIDDING

construction of concrete, hot mix asphalt, crushed surfacing, maintenance rock, ballast, gravel base, gravel backfill, gravel borrow, riprap, and bituminous surface treatments of all descriptions.

Section 4-04, Ballast and Crushed Surfacing
April 2, 2018

4-04.3(5) Shaping and Compaction

This section is supplemented with the following new paragraph:

When using 100% Recycled Concrete Aggregate, the Contractor may submit a written request to use a test point evaluation for compaction acceptance testing in lieu of compacting to 95% of the standard density as determined by the requirements of Section 2-03.3(14)D. The test point evaluation shall be performed in accordance with SOP 738.

Hot Mix Asphalt

5-04 Hot Mix Asphalt

(July 18, 2018 APWA GSP)

Delete Section 5-04 and amendments, Hot Mix Asphalt and replace it with the following:

5-04.1 Description

This Work shall consist of providing and placing one or more layers of plant-mixed hot mix asphalt (HMA) on a prepared foundation or base in accordance with these Specifications and the lines, grades, thicknesses, and typical cross-sections shown in the Plans. The manufacture of HMA may include warm mix asphalt (WMA) processes in accordance with these Specifications. WMA processes include organic additives, chemical additives, and foaming.

HMA shall be composed of asphalt binder and mineral materials as may be required, mixed in the proportions specified to provide a homogeneous, stable, and workable mixture.

5-04.2 Materials

Materials shall meet the requirements of the following sections:

Asphalt Binder	9-02.1(4)
Cationic Emulsified Asphalt	9-02.1(6)
Anti-Stripping Additive	9-02.4
HMA Additive	9-02.5
Aggregates	9-03.8
Recycled Asphalt Pavement	9-03.8(3)B
Mineral Filler	9-03.8(5)
Recycled Material	9-03.21
Portland Cement	9-01
Sand	9-03.1(2)
(As noted in 5-04.3(5)C for crack sealing)	
Joint Sealant	9-04.2
Foam Backer Rod	9-04.2(3)A

INFORMATIONAL COPY ONLY - NOT FOR BIDDING

The Contract documents may establish that the various mineral materials required for the manufacture of HMA will be furnished in whole or in part by the Contracting Agency. If the documents do not establish the furnishing of any of these mineral materials by the Contracting Agency, the Contractor shall be required to furnish such materials in the amounts required for the designated mix. Mineral materials include coarse and fine aggregates, and mineral filler.

The Contractor may choose to utilize recycled asphalt pavement (RAP) in the production of HMA. The RAP may be from pavements removed under the Contract, if any, or pavement material from an existing stockpile.

The Contractor may use up to 20 percent RAP by total weight of HMA with no additional sampling or testing of the RAP. The RAP shall be sampled and tested at a frequency of one sample for every 1,000 tons produced and not less than ten samples per project. The asphalt content and gradation test data shall be reported to the Contracting Agency when submitting the mix design for approval on the QPL. The Contractor shall include the RAP as part of the mix design as defined in these Specifications.

The grade of asphalt binder shall be as required by the Contract. Blending of asphalt binder from different sources is not permitted.

The Contractor may only use warm mix asphalt (WMA) processes in the production of HMA with 20 percent or less RAP by total weight of HMA. The Contractor shall submit to the Engineer for approval the process that is proposed and how it will be used in the manufacture of HMA.

Production of aggregates shall comply with the requirements of Section 3-01. Preparation of stockpile site, the stockpiling of aggregates, and the removal of aggregates from stockpiles shall comply with the requirements of Section 3-02.

5-04.2(1) How to Get an HMA Mix Design on the QPL

If the contractor wishes to submit a mix design for inclusion in the Qualified Products List (QPL), please follow the WSDOT process outlined in Standard Specification 5-04.2(1).

5-04.2(1)A Vacant

5-04.2(2) Mix Design – Obtaining Project Approval

No paving shall begin prior to the approval of the mix design by the Engineer.

Nonstatistical evaluation will be used for all HMA not designated as Commercial HMA in the contract documents.

Commercial evaluation will be used for Commercial HMA and for other classes of HMA in the following applications: sidewalks, road approaches, ditches, slopes, paths, trails, gores, prelevel, and pavement repair. Other nonstructural applications of HMA accepted by commercial evaluation shall be as approved by the Project Engineer. Sampling and testing of HMA accepted by commercial evaluation will be at the option of the Project Engineer. The Proposal quantity of HMA that is accepted by commercial evaluation will be excluded from the quantities used in the determination of nonstatistical evaluation.

INFORMATIONAL COPY ONLY - NOT FOR BIDDING

Nonstatistical Mix Design. Fifteen days prior to the first day of paving the contractor shall provide one of the following mix design verification certifications for Contracting Agency review;

- The WSDOT Mix Design Evaluation Report from the current WSDOT QPL, or one of the mix design verification certifications listed below.
- The proposed HMA mix design on WSDOT Form 350-042 with the seal and certification (stamp & sig-nature) of a valid licensed Washington State Professional Engineer.
- The Mix Design Report for the proposed HMA mix design developed by a qualified City or County laboratory that is within one year of the approval date.**

The mix design shall be performed by a lab accredited by a national authority such as Laboratory Accreditation Bureau, L-A-B for Construction Materials Testing, The Construction Materials Engineering Council (CMEC's) ISO 17025 or AASHTO Accreditation Program (AAP) and shall supply evidence of participation in the AASHTO: resource proficiency sample program.

Mix designs for HMA accepted by Nonstatistical evaluation shall;

- Have the aggregate structure and asphalt binder content determined in accordance with WSDOT Standard Operating Procedure 732 and meet the requirements of Sections 9-03.8(2), except that Hamburg testing for ruts and stripping are at the discretion of the Engineer, and 9-03.8(6).
- Have anti-strip requirements, if any, for the proposed mix design determined in accordance with AASHTO T 283 or T 324, or based on historic anti-strip and aggregate source compatibility from previous WSDOT lab testing.

At the discretion of the Engineer, agencies may accept verified mix designs older than 12 months from the original verification date with a certification from the Contractor that the materials and sources are the same as those shown on the original mix design.

Commercial Evaluation Approval of a mix design for "Commercial Evaluation" will be based on a review of the Contractor's submittal of WSDOT Form 350-042 (For commercial mixes, AASHTO T 324 evaluation is not required) or a Mix Design from the current WSDOT QPL or from one of the processes allowed by this section. Testing of the HMA by the Contracting Agency for mix design approval is not required.

For the Bid Item Commercial HMA, the Contractor shall select a class of HMA and design level of Equivalent Single Axle Loads (ESAL's) appropriate for the required use.

5-04.2(2)B Using Warm Mix Asphalt Processes

The Contractor may elect to use additives that reduce the optimum mixing temperature or serve as a compaction aid for producing HMA. Additives include organic additives, chemical additives and foaming processes. The use of Additives is subject to the following:

- Do not use additives that reduce the mixing temperature more than allowed in Section 5-04.3(6) in the production of mixtures.
- Before using additives, obtain the Engineer's approval using WSDOT Form 350-076 to describe the proposed additive and process.

INFORMATIONAL COPY ONLY NOT FOR BIDDING

5-04.3 Construction Requirements

5-04.3(1) Weather Limitations

Do not place HMA for wearing course on any Traveled Way beginning October 1st through March 31st of the following year without written concurrence from the Engineer.

Do not place HMA on any wet surface, or when the average surface temperatures are less than those specified below, or when weather conditions otherwise prevent the proper handling or finishing of the HMA.

Minimum Surface Temperature for Paving

Compacted Thickness (Feet)	Wearing Course	Other Courses
Less than 0.10	55°F	45°F
0.10 to .20	45°F	35°F
More than 0.20	35°F	35°F

5-04.3(2) Paving Under Traffic

When the Roadway being paved is open to traffic, the requirements of this Section shall apply.

The Contractor shall keep intersections open to traffic at all times except when paving the intersection or paving across the intersection. During such time, and provided that there has been an advance warning to the public, the intersection may be closed for the minimum time required to place and compact the mixture. In hot weather, the Engineer may require the application of water to the pavement to accelerate the finish rolling of the pavement and to shorten the time required before reopening to traffic.

Before closing an intersection, advance warning signs shall be placed and signs shall also be placed marking the detour or alternate route.

During paving operations, temporary pavement markings shall be maintained throughout the project. Temporary pavement markings shall be installed on the Roadway prior to opening to traffic. Temporary pavement markings shall be in accordance with Section 8-23.

All costs in connection with performing the Work in accordance with these requirements, except the cost of temporary pavement markings, shall be included in the unit Contract prices for the various Bid items involved in the Contract.

5-04.3(3) Equipment

5-04.3(3)A Mixing Plant

Plants used for the preparation of HMA shall conform to the following requirements:

INFORMATIONAL COPY ONLY - NOT FOR BIDDING

1. **Equipment for Preparation of Asphalt Binder** – Tanks for the storage of asphalt binder shall be equipped to heat and hold the material at the required temperatures. The heating shall be accomplished by steam coils, electricity, or other approved means so that no flame shall be in contact with the storage tank. The circulating system for the asphalt binder shall be designed to ensure proper and continuous circulation during the operating period. A valve for the purpose of sampling the asphalt binder shall be placed in either the storage tank or in the supply line to the mixer.
2. **Thermometric Equipment** – An armored thermometer, capable of detecting temperature ranges expected in the HMA mix, shall be fixed in the asphalt binder feed line at a location near the charging valve at the mixer unit. The thermometer location shall be convenient and safe for access by Inspectors. The plant shall also be equipped with an approved dial-scale thermometer, a mercury actuated thermometer, an electric pyrometer, or another approved thermometric instrument placed at the discharge chute of the drier to automatically register or indicate the temperature of the heated aggregates. This device shall be in full view of the plant operator.
3. **Heating of Asphalt Binder** – The temperature of the asphalt binder shall not exceed the maximum recommended by the asphalt binder manufacturer nor shall it be below the minimum temperature required to maintain the asphalt binder in a homogeneous state. The asphalt binder shall be heated in a manner that will avoid local variations in heating. The heating method shall provide a continuous supply of asphalt binder to the mixer at a uniform average temperature with no individual variations exceeding 25°F. Also, when a WMA additive is included in the asphalt binder, the temperature of the asphalt binder shall not exceed the maximum recommended by the manufacturer of the WMA additive.
4. **Sampling and Testing of Mineral Materials** – The HMA plant shall be equipped with a mechanical sampler for the sampling of the mineral materials. The mechanical sampler shall meet the requirements of Section 1-05.6 for the crushing and screening operation. The Contractor shall provide for the setup and operation of the field testing facilities of the Contracting Agency as provided for in Section 3-01.2(2).
5. **Sampling HMA** – The HMA plant shall provide for sampling HMA by one of the following methods:
    a. A mechanical sampling device attached to the HMA plant.
    b. Platforms or devices to enable sampling from the hauling vehicle without entering the hauling vehicle.

5-04.3(3)B Hauling Equipment

Trucks used for hauling HMA shall have tight, clean, smooth metal beds and shall have a cover of canvas or other suitable material of sufficient size to protect the mixture from adverse weather. Whenever the weather conditions during the work shift include, or are forecast to include, precipitation or an air temperature less than 45°F or when time from loading to unloading exceeds 30 minutes, the cover shall be securely attached to protect the HMA.

The contractor shall provide an environmentally benign means to prevent the HMA mixture from adhering to the hauling equipment. Excess release agent shall be drained prior to filling hauling equipment with HMA. Petroleum derivatives or other coating material that contaminate or alter the characteristics of the HMA shall not be used. For live bed trucks, the conveyer shall be in operation during the process of applying the release agent.

INFORMATIONAL COPY ONLY - NOT FOR BIDDING

5-04.3(3)C Pavers

HMA pavers shall be self-contained, power-propelled units, provided with an internally heated vibratory screed and shall be capable of spreading and finishing courses of HMA plant mix material in lane widths required by the paving section shown in the Plans.

The HMA paver shall be in good condition and shall have the most current equipment available from the manufacturer for the prevention of segregation of the HMA mixture installed, in good condition, and in working order. The equipment certification shall list the make, model, and year of the paver and any equipment that has been retrofitted.

The screed shall be operated in accordance with the manufacturer's recommendations and shall effectively produce a finished surface of the required evenness and texture without tearing, shoving, segregating, or gouging the mixture. A copy of the manufacturer's recommendations shall be provided upon request by the Contracting Agency. Extensions will be allowed provided they produce the same results, including ride, density, and surface texture as obtained by the primary screed. Extensions without augers and an internally heated vibratory screed shall not be used in the Traveled Way.

When specified in the Contract, reference lines for vertical control will be required. Lines shall be placed on both outer edges of the Traveled Way of each Roadway. Horizontal control utilizing the reference line will be permitted. The grade and slope for intermediate lanes shall be controlled automatically from reference lines or by means of a mat referencing device and a slope control device. When the finish of the grade prepared for paving is superior to the established tolerances and when, in the opinion of the Engineer, further improvement to the line, grade, cross-section, and smoothness can best be achieved without the use of the reference line, a mat referencing device may be substituted for the reference line. Substitution of the device will be subject to the continued approval of the Engineer. A joint matcher may be used subject to the approval of the Engineer. The reference line may be removed after the completion of the first course of HMA when approved by the Engineer. Whenever the Engineer determines that any of these methods are failing to provide the necessary vertical control, the reference lines will be reinstalled by the Contractor.

The Contractor shall furnish and install all pins, brackets, tensioning devices, wire, and accessories necessary for satisfactory operation of the automatic control equipment.

If the paving machine in use is not providing the required finish, the Engineer may suspend Work as allowed by Section 1-08.6. Any cleaning or solvent type liquids spilled on the pavement shall be thoroughly removed before paving proceeds.

5-04.3(3)D Material Transfer Device or Material Transfer Vehicle

A Material Transfer Device/Vehicle (MTD/V) shall only be used with the Engineer's approval, unless other-wise required by the contract.

Where an MTD/V is required by the contract, the Engineer may approve paving without an MTD/V, at the request of the Contractor. The Engineer will determine if an equitable adjustment in cost or time is due.

INFORMATIONAL COPY ONLY NOT FOR BIDDING

When used, the MTD/V shall mix the HMA after delivery by the hauling equipment and prior to laydown by the paving machine. Mixing of the HMA shall be sufficient to obtain a uniform temperature throughout the mixture. If a windrow elevator is used, the length of the windrow may be limited in urban areas or through intersections, at the discretion of the Engineer.

To be approved for use, an MTV:

1. Shall be self-propelled vehicle, separate from the hauling vehicle or paver.
2. Shall not be connected to the hauling vehicle or paver.
3. May accept HMA directly from the haul vehicle or pick up HMA from a windrow.
4. Shall mix the HMA after delivery by the hauling equipment and prior to placement into the paving machine.
5. Shall mix the HMA sufficiently to obtain a uniform temperature throughout the mixture.

To be approved for use, an MTD:

1. Shall be positively connected to the paver.
2. May accept HMA directly from the haul vehicle or pick up HMA from a windrow.
3. Shall mix the HMA after delivery by the hauling equipment and prior to placement into the paving machine.
4. Shall mix the HMA sufficiently to obtain a uniform temperature throughout the mixture.

5-04.3(3)E Rollers

Rollers shall be of the steel wheel, vibratory, oscillatory, or pneumatic tire type, in good condition and capable of reversing without backlash. Operation of the roller shall be in accordance with the manufacturer's recommendations. When ordered by the Engineer for any roller planned for use on the project, the Contractor shall provide a copy of the manufacturer's recommendation for the use of that roller for compaction of HMA. The number and weight of rollers shall be sufficient to compact the mixture in compliance with the requirements of Section 5-04.3(10). The use of equipment that results in crushing of the aggregate will not be permitted. Rollers producing pickup, washboard, uneven compaction of the surface, displacement of the mixture or other undesirable results shall not be used.

5-04.3(4) Preparation of Existing Paved Surfaces

When the surface of the existing pavement or old base is irregular, the Contractor shall bring it to a uniform grade and cross-section as shown on the Plans or approved by the Engineer.

Preleveling of uneven or broken surfaces over which HMA is to be placed may be accomplished by using an asphalt paver, a motor patrol grader, or by hand raking, as approved by the Engineer.

Compaction of preleveling HMA shall be to the satisfaction of the Engineer and may require the use of small steel wheel rollers, plate compactors, or pneumatic rollers to avoid bridging across preleveled areas by the compaction equipment. Equipment used for the compaction of preleveling HMA shall be approved by the Engineer.

INFORMATIONAL COPY ONLY - NOT FOR BIDDING

Before construction of HMA on an existing paved surface, the entire surface of the pavement shall be clean. All fatty asphalt patches, grease drippings, and other objectionable matter shall be entirely removed from the existing pavement. All pavements or bituminous surfaces shall be thoroughly cleaned of dust, soil, pavement grindings, and other foreign matter. All holes and small depressions shall be filled with an appropriate class of HMA. The surface of the patched area shall be leveled and compacted thoroughly. Prior to the application of tack coat, or paving, the condition of the surface shall be approved by the Engineer.

A tack coat of asphalt shall be applied to all paved surfaces on which any course of HMA is to be placed or abutted; except that tack coat may be omitted from clean, newly paved surfaces at the discretion of the Engineer. Tack coat shall be uniformly applied to cover the existing pavement with a thin film of residual asphalt free of streaks and bare spots at a rate between 0.02 and 0.10 gallons per square yard of retained asphalt. The rate of application shall be approved by the Engineer. A heavy application of tack coat shall be applied to all joints. For Roadways open to traffic, the application of tack coat shall be limited to surfaces that will be paved during the same working shift. The spreading equipment shall be equipped with a thermometer to indicate the temperature of the tack coat material.

Equipment shall not operate on tacked surfaces until the tack has broken and cured. If the Contractor's operation damages the tack coat it shall be repaired prior to placement of the HMA.

The tack coat shall be CSS-1, or CSS-1h emulsified asphalt. The CSS-1 and CSS-1h emulsified asphalt may be diluted once with water at a rate not to exceed one part water to one part emulsified asphalt. The tack coat shall have sufficient temperature such that it may be applied uniformly at the specified rate of application and shall not exceed the maximum temperature recommended by the emulsified asphalt manufacturer.

5-04.3(4)A Crack Sealing

5-04.3(4)A1 General

When the Proposal includes a pay item for crack sealing, seal all cracks ¼ inch in width and greater.

Cleaning: Ensure that cracks are thoroughly clean, dry and free of all loose and foreign material when filling with crack sealant material. Use a hot compressed air lance to dry and warm the pavement surfaces within the crack immediately prior to filling a crack with the sealant material. Do not overheat pavement. Do not use direct flame dryers. Routing cracks is not required.

Sand Slurry: For cracks that are to be filled with sand slurry, thoroughly mix the components and pour the mixture into the cracks until full. Add additional CSS-1 cationic emulsified asphalt to the sand slurry as needed for workability to ensure the mixture will completely fill the cracks. Strike off the sand slurry flush with the existing pavement surface and allow the mixture to cure. Top off cracks that were not completely filled with additional sand slurry. Do not place the HMA overlay until the slurry has fully cured.

The sand slurry shall consist of approximately 20 percent CSS-1 emulsified asphalt, approximately 2 percent portland cement, water (if required), and the remainder clean Class

INFORMATIONAL COPY ONLY - NOT FOR BIDDING

1 or 2 fine aggregate per section 9-03.1(2). The components shall be thoroughly mixed and then poured into the cracks and joints until full. The following day, any cracks or joints that are not completely filled shall be topped off with additional sand slurry. After the sand slurry is placed, the filler shall be struck off flush with the existing pavement surface and allowed to cure. The HMA overlay shall not be placed until the slurry has fully cured. The requirements of Section 1-06 will not apply to the portland cement and sand used in the sand slurry.

In areas where HMA will be placed, use sand slurry to fill the cracks.

In areas where HMA will not be placed, fill the cracks as follows:

1. Cracks ¼ inch to 1 inch in width - fill with hot poured sealant.
2. Cracks greater than 1 inch in width – fill with sand slurry.

Hot Poured Sealant: For cracks that are to be filled with hot poured sealant, apply the material in accordance with these requirements and the manufacturer's recommendations. Furnish a Type 1 Working Drawing of the manufacturer's product information and recommendations to the Engineer prior to the start of work, including the manufacturer's recommended heating time and temperatures, allowable storage time and temperatures after initial heating, allowable reheating criteria, and application temperature range. Confine hot poured sealant material within the crack. Clean any overflow of sealant from the pavement surface. If, in the opinion of the Engineer, the Contractor's method of sealing the cracks with hot poured sealant results in an excessive amount of material on the pavement surface, stop and correct the operation to eliminate the excess material.

5-04.3(4)A2 Crack Sealing Areas Prior to Paving

In areas where HMA will be placed, use sand slurry to fill the cracks.

5-04.3(4)A3 Crack Sealing Areas Not to be Paved

In areas where HMA will not be placed, fill the cracks as follows:

A. Cracks ¼ inch to 1 inch in width - fill with hot poured sealant.
B. Cracks greater than 1 inch in width – fill with sand slurry.

5-04.3(4)B Vacant

5-04.3(4)C Pavement Repair

The Contractor shall excavate pavement repair areas and shall backfill these with HMA in accordance with the details shown in the Plans and as marked in the field. The Contractor shall conduct the excavation operations in a manner that will protect the pavement that is to remain. Pavement not designated to be removed that is damaged as a result of the Contractor's operations shall be repaired by the Contractor to the satisfaction of the Engineer at no cost to the Contracting Agency. The Contractor shall excavate only within one lane at a time unless approved otherwise by the Engineer. The Contractor shall not excavate more area than can be completely finished during the same shift, unless approved by the Engineer.

INFORMATIONAL COPY ONLY - NOT FOR BIDDING

Unless otherwise shown in the Plans or determined by the Engineer, excavate to a depth of 1.0 feet. The Engineer will make the final determination of the excavation depth required. The minimum width of any pavement repair area shall be 40 inches unless shown otherwise in the Plans. Before any excavation, the existing pavement shall be sawcut or shall be removed by a pavement grinder. Excavated materials will become the property of the Contractor and shall be disposed of in a Contractor-provided site off the Right of Way or used in accordance with Sections 2-02.3(3) or 9-03.21.

Asphalt for tack coat shall be required as specified in Section 5-04.3(4). A heavy application of tack coat shall be applied to all surfaces of existing pavement in the pavement repair area.

Placement of the HMA backfill shall be accomplished in lifts not to exceed 0.35-foot compacted depth. Lifts that exceed 0.35-foot of compacted depth may be accomplished with the approval of the Engineer. Each lift shall be thoroughly compacted by a mechanical tamper or a roller.

5-04.3(5) Producing/Stockpiling Aggregates and RAP

Aggregates and RAP shall be stockpiled according to the requirements of Section 3-02. Sufficient storage space shall be provided for each size of aggregate and RAP. Materials shall be removed from stockpile(s) in a manner to ensure minimal segregation when being moved to the HMA plant for processing into the final mixture. Different aggregate sizes shall be kept separated until they have been delivered to the HMA plant.

5-04.3(5)A Vacant

5-04.3(6) Mixing

After the required amount of mineral materials, asphalt binder, recycling agent and anti-stripping additives have been introduced into the mixer the HMA shall be mixed until complete and uniform coating of the particles and thorough distribution of the asphalt binder throughout the mineral materials is ensured.

When discharged, the temperature of the HMA shall not exceed the optimum mixing temperature by more than 25°F as shown on the reference mix design report or as approved by the Engineer. Also, when a WMA additive is included in the manufacture of HMA, the discharge temperature of the HMA shall not exceed the maximum recommended by the manufacturer of the WMA additive. A maximum water content of 2 percent in the mix, at discharge, will be allowed providing the water causes no problems with handling, stripping, or flushing. If the water in the HMA causes any of these problems, the moisture content shall be reduced as directed by the Engineer.

Storing or holding of the HMA in approved storage facilities will be permitted with approval of the Engineer, but in no event shall the HMA be held for more than 24 hours. HMA held for more than 24 hours after mixing shall be rejected. Rejected HMA shall be disposed of by the Contractor at no expense to the Contracting Agency. The storage facility shall have an accessible device located at the top of the cone or about the third point. The device shall indicate the amount of material in storage. No HMA shall be accepted from the storage facility when the HMA in storage is below the top of the cone of the storage facility, except as the storage facility is being emptied at the end of the working shift.

INFORMATIONAL COPY ONLY - NOT FOR BIDDING

Recycled asphalt pavement (RAP) utilized in the production of HMA shall be sized prior to entering the mixer so that a uniform and thoroughly mixed HMA is produced. If there is evidence of the recycled asphalt pavement not breaking down during the heating and mixing of the HMA, the Contractor shall immediately suspend the use of the RAP until changes have been approved by the Engineer. After the required amount of mineral materials, RAP, new asphalt binder and asphalt rejuvenator have been introduced into the mixer the HMA shall be mixed until complete and uniform coating of the particles and thorough distribution of the asphalt binder throughout the mineral materials, and RAP is ensured.

5-04.3(7) Spreading and Finishing

The mixture shall be laid upon an approved surface, spread, and struck off to the grade and elevation established. HMA pavers complying with Section 5-04.3(3) shall be used to distribute the mixture. Unless otherwise directed by the Engineer, the nominal compacted depth of any layer of any course shall not exceed the following:

HMA Class 1"		0.35 feet
HMA Class ¾" and HMA Class ½"		
	wearing course	0.30 feet
	other courses	0.35 feet
HMA Class ⅜"		0.15 feet

On areas where irregularities or unavoidable obstacles make the use of mechanical spreading and finishing equipment impractical, the paving may be done with other equipment or by hand.

When more than one JMF is being utilized to produce HMA, the material produced for each JMF shall be placed by separate spreading and compacting equipment. The intermingling of HMA produced from more than one JMF is prohibited. Each strip of HMA placed during a work shift shall conform to a single JMF established for the class of HMA specified unless there is a need to make an adjustment in the JMF.

5-04.3(8) Aggregate Acceptance Prior to Incorporation in HMA

For HMA accepted by nonstatistical evaluation the aggregate properties of sand equivalent, uncompacted void content and fracture will be evaluated in accordance with Section 3-04. Sampling and testing of aggregates for HMA accepted by commercial evaluation will be at the option of the Engineer.

5-04.3(9) HMA Mixture Acceptance

Acceptance of HMA shall be as provided under nonstatistical, or commercial evaluation.

Nonstatistical evaluation will be used for the acceptance of HMA unless Commercial Evaluation is specified.

Commercial evaluation will be used for Commercial HMA and for other classes of HMA in the following applications: sidewalks, road approaches, ditches, slopes, paths, trails, gores, prelevel, temporary pavement, and pavement repair. Other nonstructural applications of HMA accepted by commercial evaluation shall be as approved by the Engineer. Sampling and testing of HMA accepted by commercial evaluation will be at the option of the Engineer.

INFORMATIONAL COPY ONLY - NOT FOR BIDDING

The mix design will be the initial JMF for the class of HMA. The Contractor may request a change in the JMF. Any adjustments to the JMF will require the approval of the Engineer and may be made in accordance with this section.

HMA Tolerances and Adjustments

1. **Job Mix Formula Tolerances** – The constituents of the mixture at the time of acceptance shall be within tolerance. The tolerance limits will be established as follows:

   For Asphalt Binder and Air Voids (Va), the acceptance limits are determined by adding the tolerances below to the approved JMF values. These values will also be the Upper Specification Limit (USL) and Lower Specification Limit (LSL) required in Section 1-06.2(2)D2

Property	Non-Statistical Evaluation	Commercial Evaluation
Asphalt Binder	+/- 0.5%	+/- 0.7%
Air Voids, Va	2.5% min. and 5.5% max	N/A

   For Aggregates in the mixture:

   a. First, determine preliminary upper and lower acceptance limits by applying the following tolerances to the approved JMF.

Aggregate Percent Passing	Non-Statistical Evaluation	Commercial Evaluation
1", ¾", ½", and 3/8" sieves	+/- 6%	+/- 8%
No. 4 sieve	+/-6%	+/- 8%
No. 8 Sieve	+/- 6%	+/-8%
No. 200 sieve	+/- 2.0%	+/- 3.0%

   b. Second, adjust the preliminary upper and lower acceptance limits determined from step (a) the minimum amount necessary so that none of the aggregate properties are outside the control points in Section 9-03.8(6). The resulting values will be the upper and lower acceptance limits for aggregates, as well as the USL and LSL required in Section 1-06.2(2)D2.

2. Job Mix Formula Adjustments – An adjustment to the aggregate gradation or asphalt binder content of the JMF requires approval of the Engineer. Adjustments to the JMF will only be considered if the change produces material of equal or better quality and may require the development of a new mix design if the adjustment exceeds the amounts listed below.

   a. **Aggregates** –2 percent for the aggregate passing the 1½", 1", ¾", ½", ⅜", and the No. 4 sieves, 1 percent for aggregate passing the No. 8 sieve, and 0.5 percent for the aggregate passing the No. 200 sieve. The adjusted JMF shall be within the range of the control points in Section 9-03.8(6).

   b. **Asphalt Binder Con**tent – The Engineer may order or approve changes to asphalt binder content. The maximum adjustment from the approved mix design for the asphalt binder content shall be 0.3 percent

5-04.3(9)A Vacant

5-04.3(9)B Vacant

5-04.3(9)C Mixture Acceptance – Nonstatistical Evaluation

INFORMATIONAL COPY ONLY - NOT FOR BIDDING

HMA mixture which is accepted by Nonstatistical Evaluation will be evaluated by the Contracting Agency by dividing the HMA tonnage into lots.

5-04.3(9)C1 Mixture Nonstatistical Evaluation – Lots and Sublots

A lot is represented by randomly selected samples of the same mix design that will be tested for acceptance. A lot is defined as the total quantity of material or work produced for each Job Mix Formula placed. Only one lot per JMF is expected. A sublot shall be equal to one day's production or 800 tons, whichever is less except that the final sublot will be a minimum of 400 tons and may be increased to 1200 tons.

All of the test results obtained from the acceptance samples from a given lot shall be evaluated collectively. If the Contractor requests a change to the JMF that is approved, the material produced after the change will be evaluated on the basis of the new JMF for the remaining sublots in the current lot and for acceptance of subsequent lots. For a lot in progress with a CPF less than 0.75, a new lot will begin at the Contractor's request after the Engineer is satisfied that material conforming to the Specifications can be produced.

Sampling and testing for evaluation shall be performed on the frequency of one sample per sublot.

5-04.3(9)C2 Mixture Nonstatistical Evaluation Sampling

Samples for acceptance testing shall be obtained by the Contractor when ordered by the Engineer. The Contractor shall sample the HMA mixture in the presence of the Engineer and in accordance with AASH-TO T 168. A minimum of three samples should be taken for each class of HMA placed on a project. If used in a structural application, at least one of the three samples shall to be tested.

Sampling and testing HMA in a Structural application where quantities are less than 400 tons is at the discretion of the Engineer.

For HMA used in a structural application and with a total project quantity less than 800 tons but more than 400 tons, a minimum of one acceptance test shall be performed. In all cases, a minimum of 3 samples will be obtained at the point of acceptance, a minimum of one of the three samples will be tested for conformance to the JMF:

- If the test results are found to be within specification requirements, additional testing will be at the Engineer's discretion.
- If test results are found not to be within specification requirements, additional testing of the remaining samples to determine a Composite Pay Factor (CPF) shall be performed.

5-04.3(9)C3 Mixture Nonstatistical Evaluation – Acceptance Testing

Testing of HMA for compliance of V_a will at the option of the Contracting Agency. If tested, compliance of V_a will use WSDOT SOP 731.

Testing for compliance of asphalt binder content will be by WSDOT FOP for AASHTO T 308.

INFORMATIONAL COPY ONLY - NOT FOR BIDDING

Testing for compliance of gradation will be by FOP for WAQTC T 27/T 11.

5-04.3(9)C4 Mixture Nonstatistical Evaluation – Pay Factors

For each lot of material falling outside the tolerance limits in 5-04.3(9), the Contracting Agency will determine a Composite Pay Factor (CPF) using the following price adjustment factors:

Table of Price Adjustment Factors	
Constituent	**Factor "f"**
All aggregate passing: 1½", 1", ¾", ½", ⅜" and No.4 sieves	2
All aggregate passing No. 8 sieve	15
All aggregate passing No. 200 sieve	20
Asphalt binder	40
Air Voids (Va) (where applicable)	20

Each lot of HMA produced under Nonstatistical Evaluation and having all constituents falling within the tolerance limits of the job mix formula shall be accepted at the unit Contract price with no further evaluation. When one or more constituents fall outside the nonstatistical tolerance limits in the Job Mix Formula shown in Table of Price Adjustment Factors, the lot shall be evaluated in accordance with Section 1-06.2 to determine the appropriate CPF. The nonstatistical tolerance limits will be used in the calculation of the CPF and the maximum CPF shall be 1.00. When less than three sublots exist, backup samples of the existing sublots or samples from the Roadway shall be tested to provide a minimum of three sets of results for evaluation.

5-04.3(9)C5 Vacant

5-04.3(9)C6 Mixture Nonstatistical Evaluation – Price Adjustments

For each lot of HMA mix produced under Nonstatistical Evaluation when the calculated CPF is less than 1.00, a Nonconforming Mix Factor (NCMF) will be determined. The NCMF equals the algebraic difference of CPF minus 1.00 multiplied by 60 percent. The total job mix compliance price adjustment will be calculated as the product of the NCMF, the quantity of HMA in the lot in tons, and the unit Contract price per ton of mix.

If a constituent is not measured in accordance with these Specifications, its individual pay factor will be considered 1.00 in calculating the Composite Pay Factor (CPF).

5-04.3(9)C7 Mixture Nonstatistical Evaluation - Retests

The Contractor may request a sublot be retested. To request a retest, the Contractor shall submit a written request within 7 calendar days after the specific test results have been

INFORMATIONAL COPY ONLY - NOT FOR BIDDING

received. A split of the original acceptance sample will be retested. The split of the sample will not be tested with the same tester that ran the original acceptance test. The sample will be tested for a complete gradation analysis, asphalt binder content, and, at the option of the agency, V_a. The results of the retest will be used for the acceptance of the HMA in place of the original sublot sample test results. The cost of testing will be deducted from any monies due or that may come due the Contractor under the Contract at the rate of $500 per sample.

5-04.3 (9)D Mixture Acceptance – Commercial Evaluation

If sampled and tested, HMA produced under Commercial Evaluation and having all constituents falling within the tolerance limits of the job mix formula shall be accepted at the unit Contract price with no further evaluation. When one or more constituents fall outside the commercial tolerance limits in the Job Mix Formula shown in 5-04.3(9), the lot shall be evaluated in accordance with Section 1-06.2 to determine the appropriate CPF. The commercial tolerance limits will be used in the calculation of the CPF and the maximum CPF shall be 1.00. When less than three sublots exist, backup samples of the existing sublots or samples from the street shall be tested to provide a minimum of three sets of results for evaluation.

For each lot of HMA mix produced and tested under Commercial Evaluation when the calculated CPF is less than 1.00, a Nonconforming Mix Factor (NCMF) will be determined. The NCMF equals the algebraic difference of CPF minus 1.00 multiplied by 60 percent. The Job Mix Compliance Price Adjustment will be calculated as the product of the NCMF, the quantity of HMA in the lot in tons, and the unit Contract price per ton of mix.

If a constituent is not measured in accordance with these Specifications, its individual pay factor will be considered 1.00 in calculating the Composite Pay Factor (CPF).

5-04.3(10) HMA Compaction Acceptance

HMA mixture accepted by nonstatistical evaluation that is used in traffic lanes, including lanes for intersections, ramps, truck climbing, weaving, and speed change, and having a specified compacted course thickness greater than 0.10-foot, shall be compacted to a specified level of relative density. The specified level of relative density shall be a Composite Pay Factor (CPF) of not less than 0.75 when evaluated in accordance with Section 1-06.2, using a LSL of 92.0 (minimum of 92 percent of the maximum density). The maximum density shall be determined by WSDOT FOP for AASHTO T 729. The specified level of density attained will be determined by the evaluation of the density of the pavement. The density of the pavement shall be determined in accordance with WSDOT FOP for WAQTC TM 8, except that gauge correlation will be at the discretion of the Engineer, when using the nuclear density gauge and WSDOT SOP 736 when using cores to determine density.

Tests for the determination of the pavement density will be taken in accordance with the required procedures for measurement by a nuclear density gauge or roadway cores after completion of the finish rolling.

If the Contracting Agency uses a nuclear density gauge to determine density the test procedures FOP for WAQTC TM 8 and WSDOT SOP T 729 will be used on the day the mix is placed and prior to opening to traffic.

Roadway cores for density may be obtained by either the Contracting Agency or the Contractor in accordance with WSDOT SOP 734. The core diameter shall be 4-inches

INFORMATIONAL COPY ONLY - NOT FOR BIDDING

minimum, unless otherwise approved by the Engineer. Roadway cores will be tested by the Contracting Agency in accordance with WSDOT FOP for AASHTO T 166.

If the Contract includes the Bid item "Roadway Core" the cores shall be obtained by the Contractor in the presence of the Engineer on the same day the mix is placed and at locations designated by the Engineer. If the Contract does not include the Bid item "Roadway Core" the Contracting Agency will obtain the cores.

For a lot in progress with a CPF less than 0.75, a new lot will begin at the Contractor's request after the Engineer is satisfied that material conforming to the Specifications can be produced.

HMA mixture accepted by commercial evaluation and HMA constructed under conditions other than those listed above shall be compacted on the basis of a test point evaluation of the compaction train. The test point evaluation shall be performed in accordance with instructions from the Engineer. The number of passes with an approved compaction train, required to attain the maximum test point density, shall be used on all subsequent paving.

HMA for preleveling shall be thoroughly compacted. HMA that is used for preleveling wheel rutting shall be compacted with a pneumatic tire roller unless otherwise approved by the Engineer.

Test Results

For a sublot that has been tested with a nuclear density gauge that did not meet the minimum of 92 percent of the reference maximum density in a compaction lot with a CPF below 1.00 and thus subject to a price reduction or rejection, the Contractor may request that a core be used for determination of the relative density of the sublot. The relative density of the core will replace the relative density determined by the nuclear density gauge for the sublot and will be used for calculation of the CPF and acceptance of HMA compaction lot.

When cores are taken by the Contracting Agency at the request of the Contractor, they shall be requested by noon of the next workday after the test results for the sublot have been provided or made available to the Contractor. Core locations shall be outside of wheel paths and as determined by the Engineer. Traffic control shall be provided by the Contractor as requested by the Engineer. Failure by the Contractor to provide the requested traffic control will result in forfeiture of the request for cores. When the CPF for the lot based on the results of the HMA cores is less than 1.00, the cost for the coring will be deducted from any monies due or that may become due the Contractor under the Contract at the rate of $200 per core and the Contractor shall pay for the cost of the traffic control.

5-04.3(10)A HMA Compaction – General Compaction Requirements

Compaction shall take place when the mixture is in the proper condition so that no undue displacement, cracking, or shoving occurs. Areas inaccessible to large compaction equipment shall be compacted by other mechanical means. Any HMA that becomes loose, broken, contaminated, shows an excess or deficiency of asphalt, or is in any way defective, shall be removed and replaced with new hot mix that shall be immediately compacted to conform to the surrounding area.

INFORMATIONAL COPY ONLY - NOT FOR BIDDING

The type of rollers to be used and their relative position in the compaction sequence shall generally be the Contractor's option, provided the specified densities are attained. Unless the Engineer has approved otherwise, rollers shall only be operated in the static mode when the internal temperature of the mix is less than 175°F. Regardless of mix temperature, a roller shall not be operated in a mode that results in checking or cracking of the mat. Rollers shall only be operated in static mode on bridge decks.

5-04.3(10)B HMA Compaction – Cyclic Density

Low cyclic density areas are defined as spots or streaks in the pavement that are less than 90 percent of the theoretical maximum density. At the Engineer's discretion, the Engineer may evaluate the HMA pavement for low cyclic density, and when doing so will follow WSDOT SOP 733. A $500 Cyclic Density Price Adjustment will be assessed for any 500-foot section with two or more density readings below 90 percent of the theoretical maximum density.

5-04.3(10)C Vacant

5-04.3(10)D HMA Nonstatistical Compaction

5-04.3(10)D1 HMA Nonstatistical Compaction – Lots and Sublots

HMA compaction which is accepted by nonstatistical evaluation will be based on acceptance testing performed by the Contracting Agency dividing the project into compaction lots.

A lot is represented by randomly selected samples of the same mix design that will be tested for acceptance. A lot is defined as the total quantity of material or work produced for each Job Mix Formula placed. Only one lot per JMF is expected. A sublot shall be equal to one day's production or 400 tons, whichever is less except that the final sublot will be a minimum of 200 tons and may be increased to 800 tons. Testing for compaction will be at the rate of 5 tests per sublot per WSDOT T 738.

The sublot locations within each density lot will be determined by the Engineer. For a lot in progress with a CPF less than 0.75, a new lot will begin at the Contractor's request after the Engineer is satisfied that material conforming to the Specifications can be produced.

HMA mixture accepted by commercial evaluation and HMA constructed under conditions other than those listed above shall be compacted on the basis of a test point evaluation of the compaction train. The test point evaluation shall be performed in accordance with instructions from the Engineer. The number of passes with an approved compaction train, required to attain the maximum test point density, shall be used on all subsequent paving.

HMA for preleveling shall be thoroughly compacted. HMA that is used to prelevel wheel ruts shall be compacted with a pneumatic tire roller unless otherwise approved by the Engineer.

5-04.3(10)D2 HMA Compaction Nonstatistical Evaluation – Acceptance Testing

The location of the HMA compaction acceptance tests will be randomly selected by the Engineer from within each sublot, with one test per sublot.

5-04.3(10)D3 HMA Nonstatistical Compaction – Price Adjustments

INFORMATIONAL COPY ONLY - NOT FOR BIDDING

For each compaction lot with one or two sublots, having all sublots attain a relative density that is 92 percent of the reference maximum density the HMA shall be accepted at the unit Contract price with no further evaluation. When a sublot does not attain a relative density that is 92 percent of the reference maximum density, the lot shall be evaluated in accordance with Section 1-06.2 to determine the appropriate CPF. The maximum CPF shall be 1.00, however, lots with a calculated CPF in excess of 1.00 will be used to offset lots with CPF values below 1.00 but greater than 0.90. Lots with CPF lower than 0.90 will be evaluated for compliance per 5-04.3(11). Additional testing by either a nuclear moisture-density gauge or cores will be completed as required to provide a minimum of three tests for evaluation.

For compaction below the required 92% a Non-Conforming Compaction Factor (NCCF) will be determined. The NCCF equals the algebraic difference of CPF minus 1.00 multiplied by 40 percent. The Compaction Price Adjustment will be calculated as the product of CPF, the quantity of HMA in the compaction control lot in tons, and the unit Contract price per ton of mix.

5-04.3(11) Reject Work

5-04.3(11)A Reject Work General

Work that is defective or does not conform to Contract requirements shall be rejected. The Contractor may propose, in writing, alternatives to removal and replacement of rejected material. Acceptability of such alternative proposals will be determined at the sole discretion of the Engineer. HMA that has been rejected is subject to the requirements in Section 1-06.2(2) and this specification, and the Contractor shall submit a corrective action proposal to the Engineer for approval.

5-04.3(11)B Rejection by Contractor

The Contractor may, prior to sampling, elect to remove any defective material and replace it with new material. Any such new material will be sampled, tested, and evaluated for acceptance.

5-04.3(11)C Rejection Without Testing (Mixture or Compaction)

The Engineer may, without sampling, reject any batch, load, or section of Roadway that appears defective. Material rejected before placement shall not be incorporated into the pavement. Any rejected section of Roadway shall be removed.

No payment will be made for the rejected materials or the removal of the materials unless the Contractor requests that the rejected material be tested. If the Contractor elects to have the rejected material tested, a minimum of three representative samples will be obtained and tested. Acceptance of rejected material will be based on conformance with the nonstatistical acceptance Specification. If the CPF for the rejected material is less than 0.75, no payment will be made for the rejected material; in addition, the cost of sampling and testing shall be borne by the Contractor. If the CPF is greater than or equal to 0.75, the cost of sampling and testing will be borne by the Contracting Agency. If the material is rejected before placement and the CPF is greater than or equal to 0.75, compensation for the rejected material will be at a CPF of 0.75. If rejection occurs after placement and the CPF is greater than or equal to 0.75, compensation for the rejected material will be at the calculated CPF with an addition of 25 percent of the unit Contract price added for the cost of removal and disposal.

INFORMATIONAL COPY ONLY NOT FOR BIDDING

5-04.3(11)D Rejection - A Partial Sublot

In addition to the random acceptance sampling and testing, the Engineer may also isolate from a normal sublot any material that is suspected of being defective in relative density, gradation or asphalt binder content. Such isolated material will not include an original sample location. A minimum of three random samples of the suspect material will be obtained and tested. The material will then be statistically evaluated as an independent lot in accordance with Section 1-06.2(2).

5-04.3(11)E Rejection - An Entire Sublot

An entire sublot that is suspected of being defective may be rejected. When a sublot is rejected a minimum of two additional random samples from this sublot will be obtained. These additional samples and the original sublot will be evaluated as an independent lot in accordance with Section 1-06.2(2).

5-04.3(11)F Rejection - A Lot in Progress

The Contractor shall shut down operations and shall not resume HMA placement until such time as the Engineer is satisfied that material conforming to the Specifications can be produced:

1. When the Composite Pay Factor (CPF) of a lot in progress drops below 1.00 and the Contractor is taking no corrective action, or
2. When the Pay Factor (PF) for any constituent of a lot in progress drops below 0.95 and the Contractor is taking no corrective action, or
3. When either the PFi for any constituent or the CPF of a lot in progress is less than 0.75.

5-04.3(11)G Rejection - An Entire Lot (Mixture or Compaction)

An entire lot with a CPF of less than 0.75 will be rejected.

5-04.3(12) Joints

5-04.3(12)A HMA Joints

5-04.3(12)A1 Transverse Joints

The Contractor shall conduct operations such that the placing of the top or wearing course is a continuous operation or as close to continuous as possible. Unscheduled transverse joints will be allowed and the roller may pass over the unprotected end of the freshly laid mixture only when the placement of the course must be discontinued for such a length of time that the mixture will cool below compaction temperature. When the Work is resumed, the previously compacted mixture shall be cut back to produce a slightly beveled edge for the full thickness of the course.

A temporary wedge of HMA constructed on a 20H:1V shall be constructed where a transverse joint as a result of paving or planing is open to traffic. The HMA in the temporary wedge shall be separated from the permanent HMA by strips of heavy wrapping paper or other methods approved by the Engineer. The wrapping paper shall be removed and the

INFORMATIONAL COPY ONLY - NOT FOR BIDDING

joint trimmed to a slightly beveled edge for the full thickness of the course prior to resumption of paving.

The material that is cut away shall be wasted and new mix shall be laid against the cut. Rollers or tamping irons shall be used to seal the joint.

5-04.3(12)A2 Longitudinal Joints

The longitudinal joint in any one course shall be offset from the course immediately below by not more than 6 inches nor less than 2 inches. All longitudinal joints constructed in the wearing course shall be located at a lane line or an edge line of the Traveled Way. A notched wedge joint shall be constructed along all longitudinal joints in the wearing surface of new HMA unless otherwise approved by the Engineer. The notched wedge joint shall have a vertical edge of not less than the maximum aggregate size or more than ½ of the compacted lift thickness and then taper down on a slope not steeper than 4H:1V. The sloped portion of the HMA notched wedge joint shall be uniformly compacted.

5-04.3(12)B Bridge Paving Joint Seals

5-04.3(12)B1 HMA Sawcut and Seal

Prior to placing HMA on the bridge deck, establish sawcut alignment points at both ends of the bridge paving joint seals to be placed at the bridge ends, and at interior joints within the bridge deck when and where shown in the Plans. Establish the sawcut alignment points in a manner that they remain functional for use in aligning the sawcut after placing the overlay.

Submit a Type 1 Working Drawing consisting of the sealant manufacturer's application procedure.

Construct the bridge paving joint seal as specified ion the Plans and in accordance with the detail shown in the Standard Plans. Construct the sawcut in accordance with the detail shown in the Standard Plan. Construct the sawcut in accordance with Section 5-05.3(8)B and the manufacturer's application procedure.

5-04.3(12)B2 Paved Panel Joint Seal

Construct the paved panel joint seal in accordance with the requirements specified in section 5-04.3(12)B1 and the following requirement:

1. Clean and seal the existing joint between concrete panels in accordance with Section 5-01.3(8) and the details shown in the Standard Plans.

5-04.3(13) Surface Smoothness

The completed surface of all courses shall be of uniform texture, smooth, uniform as to crown and grade, and free from defects of all kinds. The completed surface of the wearing course shall not vary more than ⅛ inch from the lower edge of a 10-foot straightedge placed on the surface parallel to the centerline. The transverse slope of the completed surface of the wearing course shall vary not more than ¼ inch in 10 feet from the rate of transverse slope shown in the Plans.

INFORMATIONAL COPY ONLY - NOT FOR BIDDING

When deviations in excess of the above tolerances are found that result from a high place in the HMA, the pavement surface shall be corrected by one of the following methods:

1. Removal of material from high places by grinding with an approved grinding machine, or
2. Removal and replacement of the wearing course of HMA, or
3. By other method approved by the Engineer.

Correction of defects shall be carried out until there are no deviations anywhere greater than the allowable tolerances.

Deviations in excess of the above tolerances that result from a low place in the HMA and deviations resulting from a high place where corrective action, in the opinion of the Engineer, will not produce satisfactory results will be accepted with a price adjustment. The Engineer shall deduct from monies due or that may become due to the Contractor the sum of $500.00 for each and every section of single traffic lane 100 feet in length in which any excessive deviations described above are found.

When utility appurtenances such as manhole covers and valve boxes are located in the traveled way, the utility appurtenances shall be adjusted to the finished grade prior to paving. This requirement may be waived when requested by the Contractor, at the discretion of the Engineer or when the adjustment details provided in the project plan or specifications call for utility appurtenance adjustments after the completion of paving.

Utility appurtenance adjustment discussions will be included in the Pre-Paving planning (5-04.3(14)B3). Submit a written request to waive this requirement to the Engineer prior to the start of paving.

5-04.3(14) Planing (Milling) Bituminous Pavement

The planning plan must be approved by the Engineer and a pre planning meeting must be held prior to the start of any planing. See Section 5-04.3(14)B2 for information on planning submittals.

Locations of existing surfacing to be planed are as shown in the Drawings.

Where planing an existing pavement is specified in the Contract, the Contractor must remove existing surfacing material and to reshape the surface to remove irregularities. The finished product must be a prepared surface acceptable for receiving an HMA overlay.

Use the cold milling method for planing unless otherwise specified in the Contract. Do not use the planer on the final wearing course of new HMA.

Conduct planing operations in a manner that does not tear, break, burn, or otherwise damage the surface which is to remain. The finished planed surface must be slightly grooved or roughened and must be free from gouges, deep grooves, ridges, or other imperfections. The Contractor must repair any damage to the surface by the Contractor's planing equipment, using an Engineer approved method.

INFORMATIONAL COPY ONLY - NOT FOR BIDDING

Repair or replace any metal castings and other surface improvements damaged by planing, as determined by the Engineer.

A tapered wedge cut must be planed longitudinally along curb lines sufficient to provide a minimum of 4 inches of curb reveal after placement and compaction of the final wearing course. The dimensions of the wedge must be as shown on the Drawings or as specified by the Engineer.

A tapered wedge cut must also be made at transitions to adjoining pavement surfaces (meet lines) where butt joints are shown on the Drawings. Cut butt joints in a straight line with vertical faces 2 inches or more in height, producing a smooth transition to the existing adjoining pavement.

After planing is complete, planed surfaces must be swept, cleaned, and if required by the Contract, patched and preleveled.

The Engineer may direct additional depth planing. Before performing this additional depth planing, the Contractor must conduct a hidden metal in pavement detection survey as specified in Section 5-04.3(14)A.

5-04.3(14)A Pre-Planing Metal Detection Check

Before starting planing of pavements, and before any additional depth planing required by the Engineer, the Contractor must conduct a physical survey of existing pavement to be planed with equipment that can identify hidden metal objects.

Should such metal be identified, promptly notify the Engineer.

See Section 1-07.16(1) regarding the protection of survey monumentation that may be hidden in pavement.

The Contractor is solely responsible for any damage to equipment resulting from the Contractor's failure to conduct a pre-planing metal detection survey, or from the Contractor's failure to notify the Engineer of any hidden metal that is detected.

5-04.3(14)B Paving and Planing Under Traffic

5-04.3(14)B1 General

In addition the requirements of Section 1-07.23 and the traffic controls required in Section 1-10, and unless the Contract specifies otherwise or the Engineer approves, the Contractor must comply with the following:

1. Intersections:
   a. Keep intersections open to traffic at all times, except when paving or planing operations through an intersection requires closure. Such closure must be kept to the minimum time required to place and compact the HMA mixture, or plane as appropriate. For paving, schedule such closure to individual lanes or portions thereof that allows the traffic volumes and schedule of traffic volumes required in the approved traffic control plan. Schedule work so that adjacent intersections are

INFORMATIONAL COPY ONLY - NOT FOR BIDDING

not impacted at the same time and comply with the traffic control restrictions required by the Traffic Engineer. Each individual intersection closure or partial closure, must be addressed in the traffic control plan, which must be submitted to and accepted by the Engineer, see Section 1-10.2(2).

b. When planing or paving and related construction must occur in an intersection, consider scheduling and sequencing such work into quarters of the intersection, or half or more of an intersection with side street detours. Be prepared to sequence the work to individual lanes or portions thereof.

c. Should closure of the intersection in its entirety be necessary, and no trolley service is impacted, keep such closure to the minimum time required to place and compact the HMA mixture, plane, remove asphalt, tack coat, and as needed.

d. Any work in an intersection requires advance warning in both signage and a number of Working Days advance notice as determined by the Engineer, to alert traffic and emergency services of the intersection closure or partial closure.

e. Allow new compacted HMA asphalt to cool to ambient temperature before any traffic is allowed on it. Traffic is not allowed on newly placed asphalt until approval has been obtained from the Engineer.

2. Temporary centerline marking, post-paving temporary marking, temporary stop bars, and maintaining temporary pavement marking must comply with Section 8-23.

3. Permanent pavement marking must comply with Section 8-22.

5-04.3(14)B2 Submittals – Planing Plan and HMA Paving Plan

The Contractor must submit a separate planing plan and a separate paving plan to the Engineer at least 5 Working Days in advance of each operation's activity start date. These plans must show how the moving operation and traffic control are coordinated, as they will be discussed at the pre-planing briefing and pre-paving briefing. When requested by the Engineer, the Contractor must provide each operation's traffic control plan on 24 x 36 inch or larger size Shop Drawings with a scale showing both the area of operation and sufficient detail of traffic beyond the area of operation where detour traffic may be required. The scale on the Shop Drawings is 1 inch = 20 feet, which may be changed if the Engineer agrees sufficient detail is shown.

The planing operation and the paving operation include, but are not limited to, metal detection, removal of asphalt and temporary asphalt of any kind, tack coat and drying, staging of supply trucks, paving trains, rolling, scheduling, and as may be discussed at the briefing.

When intersections will be partially or totally blocked, provide adequately sized and noticeable signage alerting traffic of closures to come, a minimum 2 Working Days in advance. The traffic control plan must show where police officers will be stationed when signalization is or may be, countermanded, and show areas where flaggers are proposed.

At a minimum, the planing and the paving plan must include:

1. A copy of the accepted traffic control plan, see Section 1-10.2(2), detailing each day's traffic control as it relates to the specific requirements of that day's planing and paving. Briefly describe the sequencing of traffic control consistent with the proposed planing and paving sequence, and scheduling of placement of temporary pavement markings and channelizing devices after each day's planing, and paving.

INFORMATIONAL COPY ONLY - NOT FOR BIDDING

2. A copy of each intersection's traffic control plan.
3. Haul routes from Supplier facilities, and locations of temporary parking and staging areas, including return routes. Describe the complete round trip as it relates to the sequencing of paving operations.
4. Names and locations of HMA Supplier facilities to be used.
5. List of all equipment to be used for paving.
6. List of personnel and associated job classification assigned to each piece of paving equipment.
7. Description (geometric or narrative) of the scheduled sequence of planing and of paving, and intended area of planing and of paving for each day's work, must include the directions of proposed planing and of proposed paving, sequence of adjacent lane paving, sequence of skipped lane paving, intersection planing and paving scheduling and sequencing, and proposed notifications and coordinations to be timely made. The plan must show HMA joints relative to the final pavement marking lane lines.
8. Names, job titles, and contact information for field, office, and plant supervisory personnel.
9. A copy of the approved Mix Designs.
10. Tonnage of HMA to be placed each day.
11. Approximate times and days for starting and ending daily operations.

5-04.3(14)B3 Pre-Paving and Pre-Planing Briefing

At least 2 Working Days before the first paving operation and the first planing operation, or as scheduled by the Engineer for future paving and planing operations to ensure the Contractor has adequately prepared for notifying and coordinating as required in the Contract, the Contractor must be prepared to discuss that day's operations as they relate to other entities and to public safety and convenience, including driveway and business access, garbage truck operations, Metro transit operations and working around energized overhead wires, school and nursing home and hospital and other accesses, other contractors who may be operating in the area, pedestrian and bicycle traffic, and emergency services. The Contractor, and Subcontractors that may be part of that day's operations, must meet with the Engineer and discuss the proposed operation as it relates to the submitted planing plan and paving plan, approved traffic control plan, and public convenience and safety. Such discussion includes, but is not limited to:

1. General for both Paving Plan and for Planing Plan:
   a. The actual times of starting and ending daily operations.
   b. In intersections, how to break up the intersection, and address traffic control and signalization for that operation, including use of peace officers.
   c. The sequencing and scheduling of paving operations and of planing operations, as applicable, as it relates to traffic control, to public convenience and safety, and to other con-tractors who may operate in the Project Site.
   d. Notifications required of Contractor activities, and coordinating with other entities and the public as necessary.
   e. Description of the sequencing of installation and types of temporary pavement markings as it relates to planning and to paving.
   f. Description of the sequencing of installation of, and the removal of, temporary pavement patch material around exposed castings and as may be needed

INFORMATIONAL COPY ONLY - NOT FOR BIDDING

g. Description of procedures and equipment to identify hidden metal in the pavement, such as survey monumentation, monitoring wells, street car rail, and castings, before planning, see Section 5-04.3(14)B2.

h. Description of how flaggers will be coordinated with the planing, paving, and related operations.

i. Description of sequencing of traffic controls for the process of rigid pavement base repairs.

j. Other items the Engineer deems necessary to address.

2. Paving – additional topics:

a. When to start applying tack and coordinating with paving.

b. Types of equipment and numbers of each type equipment to be used. If more pieces of equipment than personnel are proposed, describe the sequencing of the personnel operating the types of equipment. Discuss the continuance of operator personnel for each type equipment as it relates to meeting Specification requirements.

c. Number of JMFs to be placed, and if more than one JMF how the Contractor will ensure different JMFs are distinguished, how pavers and MTVs are distinguished if more than one JMF is being placed at the time, and how pavers and MTVs are cleaned so that one JMF does not adversely influence the other JMF.

d. Description of contingency plans for that day's operations such as equipment breakdown, rain out, and Supplier shutdown of operations.

e. Number of sublots to be placed, sequencing of density testing, and other sampling and testing.

5-04.3(15) Sealing Pavement Surfaces

Apply a fog seal where shown in the plans. Construct the fog seal in accordance with Section 5-02.3. Unless otherwise approved by the Engineer, apply the fog seal prior to opening to traffic.

5-04.3(16) HMA Road Approaches

HMA approaches shall be constructed at the locations shown in the Plans or where staked by the Engineer. The Work shall be performed in accordance with Section 5-04.

5-04.4 Measurement

HMA Cl. ___ PG ___, HMA for ___ Cl. ___ PG ___, and Commercial HMA will be measured by the ton in accordance with Section 1-09.2, with no deduction being made for the weight of asphalt binder, mineral filler, or any other component of the mixture. If the Contractor elects to remove and replace mix as allowed by Section 5-04.3(11), the material removed will not be measured.

Roadway cores will be measured per each for the number of cores taken.

Preparation of untreated roadway will be measured by the mile once along the centerline of the main line Roadway. No additional measurement will be made for ramps, Auxiliary Lanes, service roads, Frontage Roads, or Shoulders. Measurement will be to the nearest 0.01 mile.

Soil residual herbicide will be measured by the mile for the stated width to the nearest 0.01 mile or by the square yard, whichever is designated in the Proposal.

INFORMATIONAL COPY ONLY - NOT FOR BIDDING

Pavement repair excavation will be measured by the square yard of surface marked prior to excavation.

Asphalt for prime coat will be measured by the ton in accordance with Section 1-09.2.

Prime coat aggregate will be measured by the cubic yard, truck measure, or by the ton, whichever is designated in the Proposal.

Asphalt for fog seal will be measured by the ton, as provided in Section 5-02.4.

Longitudinal joint seals between the HMA and cement concrete pavement will be measured by the linear foot along the line and slope of the completed joint seal.

Planing bituminous pavement will be measured by the square yard.

Temporary pavement marking will be measured by the linear foot as provided in Section 8-23.4.

Water will be measured by the M gallon as provided in Section 2-07.4.

Section 5-04.2 Materials, is supplemented with the following;

(******)

Testing of the RAP on this project will not be required.

Section 5-04.3(3)D Material Transfer Device or Material Transfer Vehicle, is supplemented with the following;

(******)

A Material Transfer Device/Vehicle (MTD/V) is only required on the final lift on this project.

5-04.5 Payment

Payment will be made for each of the following Bid items that are included in the Proposal:

"HMA Cl. ___ PG ___", per ton.

"HMA for Approach Cl. ___ PG ___", per ton.

"HMA for Preleveling Cl. ___ PG ___", per ton.

"HMA for Pavement Repair Cl. ___ PG ___", per ton.

"Commercial HMA", per ton.

INFORMATIONAL COPY ONLY - NOT FOR BIDDING

The unit Contract price per ton for "HMA Cl. ___ PG ___", "HMA for Approach Cl. ___ PG ___", "HMA for Preleveling Cl. ___ PG ___", "HMA for Pavement Repair Cl. ___ PG ___", and "Commercial HMA" shall be full compensation for all costs, including anti-stripping additive, incurred to carry out the requirements of Section 5-04 except for those costs included in other items which are included in this Subsection and which are included in the Proposal.

"Preparation of Untreated Roadway", per mile.

The unit Contract price per mile for "Preparation of Untreated Roadway" shall be full pay for all Work described under 5-04.3(4) , with the exception, however, that all costs involved in patching the Roadway prior to placement of HMA shall be included in the unit Contract price per ton for "HMA Cl. ___ PG ___" which was used for patching. If the Proposal does not include a Bid item for "Preparation of Untreated Roadway", the Roadway shall be prepared as specified, but the Work shall be included in the Contract prices of the other items of Work.

"Preparation of Existing Paved Surfaces", per mile.

The unit Contract Price for "Preparation of Existing Paved Surfaces" shall be full pay for all Work described under Section 5-04.3(4) with the exception, however, that all costs involved in patching the Roadway prior to placement of HMA shall be included in the unit Contract price per ton for "HMA Cl. ___ PG ___" which was used for patching. If the Proposal does not include a Bid item for "Preparation of Untreated Roadway", the Roadway shall be prepared as specified, but the Work shall be included in the Contract prices of the other items of Work.

"Crack Sealing", by force account.

"Crack Sealing" will be paid for by force account as specified in Section 1-09.6. For the purpose of providing a common Proposal for all Bidders, the Contracting Agency has entered an amount in the Proposal to become a part of the total Bid by the Contractor.

"Pavement Repair Excavation Incl. Haul", per square yard.

The unit Contract price per square yard for "Pavement Repair Excavation Incl. Haul" shall be full payment for all costs incurred to perform the Work described in Section 5-04.3(4) with the exception, however, that all costs involved in the placement of HMA shall be included in the unit Contract price per ton for "HMA for Pavement Repair Cl. ___ PG ___", per ton.

"Asphalt for Prime Coat", per ton.

The unit Contract price per ton for "Asphalt for Prime Coat" shall be full payment for all costs incurred to obtain, provide and install the material in accordance with Section 5-04.3(4).

"Prime Coat Agg.", per cubic yard, or per ton.

INFORMATIONAL COPY ONLY - NOT FOR BIDDING

The unit Contract price per cubic yard or per ton for "Prime Coat Agg." shall be full pay for furnishing, loading, and hauling aggregate to the place of deposit and spreading the aggregate in the quantities required by the Engineer.

"Asphalt for Fog Seal", per ton.

Payment for "Asphalt for Fog Seal" is described in Section 5-02.5.

"Longitudinal Joint Seal", per linear foot.

The unit Contract price per linear foot for "Longitudinal Joint Seal" shall be full payment for all costs incurred to perform the Work described in Section 5-04.3(12).

"Planing Bituminous Pavement", per square yard.

The unit Contract price per square yard for "Planing Bituminous Pavement" shall be full payment for all costs incurred to perform the Work described in Section 5-04.3(14).

"Temporary Pavement Marking", per linear foot.

Payment for "Temporary Pavement Marking" is described in Section 8-23.5.

"Water", per M gallon.

Payment for "Water" is described in Section 2-07.5.

"Job Mix Compliance Price Adjustment", by calculation.

"Job Mix Compliance Price Adjustment" will be calculated and paid for as described in Section 5-04.3(9)C6.

"Compaction Price Adjustment", by calculation.

"Compaction Price Adjustment" will be calculated and paid for as described in Section 5-04..3(10)D3.

"Roadway Core", per each.

The Contractor's costs for all other Work associated with the coring (e.g., traffic control) shall be incidental and included within the unit Bid price per each and no additional payments will be made.

"Cyclic Density Price Adjustment", by calculation.

INFORMATIONAL COPY ONLY - NOT FOR BIDDING

"Cyclic Density Price Adjustment" will be calculated and paid for as described in Section 5-04.3(10)B.

DIVISION 7
DRAINAGE STRUCTURES, STORM SEWERS, SANITARY SEWERS, WATER MAINS, AND CONDUITS

CULVERTS

Section 7-02, Culverts
April 2, 2018

7-02.2 Materials

In the first paragraph, the references to "Portland Cement" and "Aggregates for Portland Cement Concrete" are revised to read:

Cement	9-01
Aggregates for Concrete	9-03.1

7-02.3(6)A4 Excavation and Bedding Preparation

The first sentence of the third paragraph is revised to read:

> The bedding course shall be a 6-inch minimum thickness layer of culvert bedding material, defined as granular material either conforming to Section 9-03.12(3) or to AASHTO Grading No. 57 as specified in Section 9-03.1(4)C.

Section 7-08, General Pipe Installation Requirements
April 2, 2018

7-08.3(3) Backfilling

The fifth sentence of the fourth paragraph is revised to read:

> All compaction shall be in accordance with the Compaction Control Test of Section 2-03.3(14)D except in the case that 100% Recycled Concrete Aggregate is used.

The following new sentences are inserted after the fifth sentence of the fourth paragraph:

> When 100% Recycled Concrete Aggregate is used, the Contractor may submit a written request to use a test point evaluation for compaction acceptance. Test Point evaluation shall be performed in accordance with SOP 738.

7-08.5 Payment

(******)

The unit contract price bid per Linear Foot of Plain Steel Culvert Pipe 0.064" Th. – 12" Diameter and Plain Steel Culvert Pipe 0.064" Th. – 18" Diameter, shall be full compensation for performing the work outlined herein and in accordance with the plans and specifications and shall also include the cost for "Structure Excavation Class "B", and Gravel Backfill For Pipe Zone Bedding".

INFORMATIONAL COPY ONLY - NOT FOR BIDDING

Section 8-01, Erosion Control and Water Pollution Control
April 1, 2019

8-01.1 Description

This section is revised to read:

> This Work consists of furnishing, installing, maintaining, removing and disposing of best management practices (BMPs), as defined in the Washington Administrative Code (WAC) 173-201A, to manage erosion and water quality in accordance with these Specifications and as shown in the Plans or as designated by the Engineer.
>
> The Contracting Agency may have a National Pollution Discharge Elimination System Construction Stormwater General Permit (CSWGP) as identified in the Contract Special Provisions. The Contracting Agency may or may not transfer coverage of the CSWGP to the Contractor when a CSWGP has been obtained. The Contracting Agency may not have a CSWGP for the project but may have another water quality related permit as identified in the Contract Special Provisions or the Contracting Agency may not have water quality related permits but the project is subject to applicable laws for the Work. Section 8-01 covers all of these conditions.

This section is supplemented with the following new subsection:

8-01.1(1) Definitions

1. pH Affected Stormwater

a. Stormwater contacting green concrete (concrete that has set/stiffen but is still curing), recycled concrete, or engineered soils (as defined in the Construction Stormwater General Permit (CSWGP)) as a natural process

b. pH monitoring shall be performed in accordance with the CSWGP, or Water Quality Standards (WQS in accordance with WAC 173-201A (surface) or 173-200C (ground)) when the CSWGP does not apply

c. May be neutralized and discharged to surface waters or infiltrated

2. pH Affected Non-Stormwater

a. Conditionally authorized in accordance with CSWGP Special Condition S.1.C., uncontaminated water contacting green concrete, recycled concrete, or engineered soils (as defined in the CSWGP)

b. Shall not be categorized as cementitious wastewater/concrete wastewater, as defined below

c. Shall be managed and treated in accordance with the CSWGP, or WQS when the CSWGP does not apply

d. pH adjustment and dechlorination may be necessary, as specified in the CSWGP or in accordance with WQS when the CSWGP does not apply

e. May be neutralized, treated, and discharged to surface waters in accordance with the CSWGP, with the exception of water-only shaft drilling slurry. Water-only shaft

INFORMATIONAL COPY ONLY - NOT FOR BIDDING

drilling slurry may be treated, neutralized, and infiltrated but not discharged to surface waters (Refer to Special Conditions S1.C. Authorized Discharges and S1.d Prohibited Discharges of the CSWGP)

3. Cementitious Wastewater/Concrete Wastewater

a. Any water that comes into contact with fine cementitious particles or slurry; any water used in the production, placement and/or clean-up of cementitious products; any water used to cut, grind, wash, or otherwise modify cementitious products

b. When any water, including stormwater, commingles with cementitious wastewater/concrete wastewater, the resulting water is considered cementitious wastewater/concrete wastewater and shall be managed to prevent discharge to waters of the State, including ground water

c. CSWGP Examples include: water used for or resulting from concrete truck/mixer/pumper/tool/chute rinsing or washing, concrete saw cutting and surfacing (sawing, coring, grinding, roughening, hydro-demolition, bridge and road surfacing)

d. Cannot be neutralized and discharged or infiltrated

8-01.2 Materials

The first paragraph is revised to read:

Materials shall meet the requirements of the following sections:

Corrugated Polyethylene Drain Pipe	9-05.1(6)
Quarry Spalls and Permeable Ballast	9-13
Erosion Control and Roadside Planting	9-14
Construction Geotextile	9-33

The second paragraph is deleted.

8-01.3(1) General

This section is revised to read:

Adaptive management shall be employed throughout the duration of the project for the implementation of erosion and water pollution control permit requirements for the current condition of the project site. The adaptive management includes the selection and utilization of BMPs, scheduling of activities, prohibiting unacceptable practices, implementing maintenance procedures, and other managerial practices that when used singularly or in combination, prevent or reduce the release of pollutants to waters of the State. The adaptive management shall use the means and methods identified in this section and means and methods identified in the Washington State Department of Transportation's Temporary Erosion and Sediment Control Manual or the Washington State Department of Ecology's Stormwater Management Manuals for construction stormwater.

The Contractor shall install a high visibility fence along the lines shown in the Plans or as instructed by the Engineer.

Throughout the life of the project, the Contractor shall preserve and protect the delineated preservation area, acting immediately to repair or restore any high visibility fencing damaged or removed.

INFORMATIONAL COPY ONLY - NOT FOR BIDDING

All discharges to surface waters shall comply with surface water quality standards as defined in Washington Administrative Code (WAC) Chapter 173-201A. All discharges to groundwater shall comply with groundwater quality standards WAC Chapter 173-200. The Contractor shall comply with the CSWGP when the project is covered by the CSWGP.

Work, at a minimum, shall include the implementation of:

1. Sediment control measures prior to ground disturbing activities to ensure all discharges from construction areas receive treatment prior to discharging from the site.

2. Flow control measures to prevent erosive flows from developing.

3. Water management strategies and pollution prevention measures to prevent contamination of waters that will be discharged to surface waters or the ground.

4. Erosion control measures to stabilize erodible earth not being worked.

5. Maintenance of BMPs to ensure continued compliant performance.

6. Immediate corrective action if evidence suggests construction activity is not in compliance. Evidence includes sampling data, olfactory or visual evidence such as the presence of suspended sediment, turbidity, discoloration, or oil sheen in discharges.

To the degree possible, the Contractor shall coordinate this Work with permanent drainage and roadside restoration Work the Contract requires.

Clearing, grubbing, excavation, borrow or fill within the Right of Way shall never expose more erodible earth than as listed below:

Western Washington (West of the Cascade Mountain Crest)	
May 1 through September 30	17 Acres
October 1 through April 30	5 Acres

Eastern Washington (East of the Cascade Mountain Crest)	
April 1 through October 31	17 Acres
November 1 through March 31	5 Acres

The Engineer may increase or decrease the limits based on project conditions.

Erodible earth is defined as any surface where soils, grindings, or other materials may be capable of being displaced and transported by rain, wind, or surface water runoff.

Erodible earth not being worked, whether at final grade or not, shall be covered within the specified time period (see the table below), using BMPs for erosion control.

Western Washington (West of the Cascade Mountain Crest)	**Eastern Washington (East of the Cascade Mountain Crest)**

INFORMATIONAL COPY ONLY - NOT FOR BIDDING

October 1 through April 30	2 days maximum
May 1 to September 30	7 days maximum

October 1 through June 30	5 days maximum
November 1 through March 31	10 days maximum

When applicable, the Contractor shall be responsible for all Work required for compliance with the CSWGP including annual permit fees.

If the Engineer, under Section 1-08.6, orders the Work suspended, the Contractor shall continue to comply with this division during the suspension.

8-01.3(1)A Submittals

This section's content is deleted.

This section is supplemented with the following new subsection:

8-01.3(1)A1 Temporary Erosion and Sediment Control Plan

Temporary Erosion and Sediment Control (TESC) Plans consist of a narrative section and plan sheets that meets the Washington State Department of Ecology's Stormwater Pollution Prevention Plan (SWPPP) requirement in the CSWGP. For projects that do not require a CSWGP but have the potential to discharge to surface waters of the state, an abbreviated TESC plan shall be used, which may consist of a narrative and/or plan sheets and shall demonstrate compliance with applicable codes, ordinances and regulations, including the water quality standards for surface waters, Chapter 173-201A of the Washington Administrative Code (WAC) and water quality standards for groundwaters in accordance with Chapter 173-200 WAC.

The Contractor shall either adopt the TESC Plan in the Contract or develop a new TESC Plan. If the Contractor adopts the TESC Plan in scenarios in which the CSWGP is transferred to the Contractor, the Contractor shall modify the TESC Plan to match the Contractor's schedule, method of construction, and to include all areas that will be used to directly support construction activity such as equipment staging yards, material storage areas, or borrow areas. TESC Plans shall include all high visibility fence shown in the Plans. All TESC Plans shall meet the requirements of the current edition of the WSDOT Temporary Erosion and Sediment Control Manual M 3109 and be adaptively managed throughout construction based on site inspections and required sampling to maintain compliance with the CSWGP, or WQS when no CSWGP applies. The Contractor shall develop a schedule for implementation of the TESC work and incorporate it into the Contractor's progress schedule.

The Contractor shall submit their TESC Plan (either the adopted plan or new plan) as Type 2 Working Drawings. At the request of the Engineer, updated TESC Plans shall be submitted as Type 1 Working Drawings.

8-01.3(1)B Erosion and Sediment Control (ESC) Lead

This section is revised to read:

The Contractor shall identify the ESC Lead at the preconstruction discussions and in the TESC Plan. The ESC Lead shall have, for the life of the Contract, a current Certificate of Training in Construction Site Erosion and Sediment Control from a course approved by the Washington State Department of Ecology. The ESC Lead must be onsite or on call at all times throughout construction. The ESC Lead shall be listed on the Emergency Contact List required under Section 1-05.13(1).

INFORMATIONAL COPY ONLY - NOT FOR BIDDING

The ESC Lead shall implement the TESC Plan. Implementation shall include, but is not limited to:

1. Installing, adaptively managing, and maintaining temporary erosion and sediment control BMPs to assure continued performance of their intended function. Damaged or inadequate BMPs shall be corrected immediately.

2. Updating the TESC Plan to reflect current field conditions.

3. Discharge sampling and submitting Discharge Monitoring Reports (DMRs) to the Washington State Department of Ecology in accordance with the CSWGP.

4. Develop and maintain the Site Log Book as defined in the CSWGP. When the Site Log Book or portion thereof is electronically developed, the electronic documentation must be accessible onsite. As a part of the Site Log Book, the Contractor shall develop and maintain a tracking table to show that identified TESC compliance issues are fully resolved within 10 calendar days. The table shall include the date an issue was identified, a description of how it was resolved, and the date the issue was fully resolved.

The ESC Lead shall also inspect all areas disturbed by construction activities, all on-site erosion and sediment control BMPs, and all stormwater discharge points at least once every calendar week and within 24-hours of runoff events in which stormwater discharges from the site. Inspections of temporarily stabilized, inactive sites may be reduced to once every calendar month. The Washington State Department of Ecology's Erosion and Sediment Control Site Inspection Form, located at https://ecology.wa.gov/Regulations-Permits/Permits-certifications/Stormwater-general-permits/Construction-stormwater-permit, shall be completed for each inspection and a copy shall be submitted to the Engineer no later than the end of the next working day following the inspection.

8-01.3(1)C Water Management

This section is supplemented with the following new subsections:

8-01.3(1)C5 Water Management for In-Water Work Below Ordinary High Water Mark (OHWM)

Work over surface waters of the state (defined in WAC 173-201A-010) or below the OHWM (defined in RCW 90.58.030) shall comply with water quality standards for surface waters of the State of Washington.

8-01.3(1)C6 Environmentally Acceptable Hydraulic Fluid

All equipment containing hydraulic fluid that extends from a bridge deck over surface waters of the state or below the OHWM, shall be equipped with a biodegradable hydraulic fluid. The fluid shall achieve either a Pw1 Environmental Persistence Classification stated in ASTM D6046 (≥60% biodegradation in 28 days) or equivalent standard. Alternatively, hydraulic fluid that meets International Organization for Standardization (ISO 15380), the European Union Ecolabel, or equivalent certification will also be accepted.

The Contractor shall submit a Type 1 Working Drawing consisting of a manufacturer catalog cut of the hydraulic fluid used.

The designation of biodegradable hydraulic fluid does not mean fluid spills are acceptable. The Contractor shall respond to spills to land or water in accordance with the Contract, the associated SPCC Plan, and all applicable local, state, and federal regulations.

INFORMATIONAL COPY ONLY - NOT FOR BIDDING

8-01.3(1)C7 Turbidity Curtain

All Work for the turbidity curtain shall be in accordance with the manufacturer's recommendations for the site conditions. Removal procedures shall be developed and used to minimize silt release and disturbance of silt. The Contractor shall submit a Type 2 Working Drawing, detailing product information, installation and removal procedures, equipment and workforce needs, maintenance plans, and emergency repair/replacement plans.

Turbidity curtain materials, installation, and maintenance shall be sufficient to comply with water quality standards.

The Contractor shall notify the Engineer 10 days in advance of removing the turbidity curtain. All components of the turbidity curtain shall be removed from the project.

8-01.3(1)C1 Disposal of Dewatering Water

This section is revised to read:

When uncontaminated groundwater is encountered in an excavation on a project it may be infiltrated within vegetated areas of the right of way not designated as Sensitive Areas or incorporated into an existing stormwater conveyance system at a rate that will not cause erosion or flooding in any receiving surface water.

Alternatively, the Contractor may pursue independent disposal and treatment alternatives that do not use the stormwater conveyance system provided it is in compliance with the applicable WACs and permits.

8-01.3(1)C2 Process Wastewater

This section is revised to read:

Wastewater generated on-site as a byproduct of a construction process shall not be discharged to surface waters of the State. Some sources of process wastewater may be infiltrated in accordance with the CSWGP. Some sources of process wastewater may be disposed via independent disposal and treatment alternatives in compliance with the applicable WACs and permits.

8-01.3(1)C3 Shaft Drilling Slurry Wastewater

This section is revised to read:

Wastewater generated on-site during shaft drilling activity shall be managed and disposed of in accordance with the requirements below. No shaft drilling slurry wastewater shall be discharged to surface waters of the State. Neither the sediment nor liquid portions of the shaft drilling slurry wastewater shall be contaminated, as detectable by visible or olfactory indication (e.g., chemical sheen or smell).

1. Water-only shaft drilling slurry or water slurry with accepted flocculants may be infiltrated on-site. Flocculants used shall meet the requirements of Section 9-14.5(1) or shall be chitosan products listed as General Use Level Designation (GULD) on the Washington State Department of Ecology's stormwater treatment technologies webpage for construction treatment. Infiltration is permitted if the following requirements are met:

    a. Wastewater shall have a pH of 6.5 – 8.5 prior to discharge.

INFORMATIONAL COPY ONLY - NOT FOR BIDDING

b. The amount of flocculant added to the slurry shall be kept to the minimum needed to adequately settle out solids. The flocculant shall be thoroughly mixed into the slurry.

c. The slurry removed from the shaft shall be contained in a leak proof cell or tank for a minimum of 3 hours.

d. The infiltration rate shall be reduced if needed to prevent wastewater from leaving the infiltration location. The infiltration site shall be monitored regularly during infiltration activity. All wastewater discharged to the ground shall fully infiltrate and discharges shall stop before the end of each work day.

e. Drilling spoils and settled sediments remaining in the containment cell or tank shall be disposed of in accordance with Section 6-19.3(4)F.

f. Infiltration locations shall be in upland areas at least 150 feet away from surface waters, wells, on-site sewage systems, aquifer sensitive recharge areas, sole source aquifers, well head protection areas, and shall be marked on the plan sheets before the infiltration activity begins.

g. Prior to infiltration, the Contractor shall submit a Shaft Drilling Slurry Wastewater Management and Infiltration Plan as a Type 2 Working Drawing. This Plan shall be kept on-site, adapted if needed to meet the construction requirements, and updated to reflect what is being done in the field. The Working Drawing shall include, at a minimum, the following information:

i. Plan sheet showing the proposed infiltration location and all surface waters, wells, on-site sewage systems, aquifer-sensitive recharge areas, sole source aquifers, and well-head protection areas within 150 feet.

ii. The proposed elevation of soil surface receiving the wastewater for infiltration and the anticipated phreatic surface (i.e., saturated soil).

iii. The source of the water used to produce the slurry.

iv. The estimated total volume of wastewater to be infiltrated.

v. The accepted flocculant to be used (if any).

vi. The controls or methods used to prevent surface wastewater runoff from leaving the infiltration location.

vii. The strategy for removing slurry wastewater from the shaft and containing the slurry wastewater once it has been removed from the shaft.

viii. The strategy for monitoring infiltration activity and adapting methods to ensure compliance.

ix. A contingency plan that can be implemented immediately if it becomes evident that the controls in place or methods being used are not adequate.

x. The strategy for cleaning up the infiltration location after the infiltration activity is done. Cleanup shall include stabilizing any loose sediment on the surface within the infiltration area generated as a byproduct of

INFORMATIONAL COPY ONLY NOT FOR BIDDING

suspended solids in the infiltrated wastewater or soil disturbance associated with BMP placement and removal.

2. Shaft drilling mineral slurry, synthetic slurry, or slurry with polymer additives not allowed for infiltration shall be contained and disposed of by the Contractor at an accepted disposal facility in accordance with Section 2-03.3(7)C. Spoils that have come into contact with mineral slurry shall be disposed of in accordance with Section 6-19.3(4)F.

8-01.3(1)C4 Management of Off-Site Water

This section is revised to read:

Prior to clearing and grubbing, the Contractor shall intercept all sources of off-site surface water and overland flow that will run-on to the project. Off-site surface water run-on shall be diverted through or around the project in a way that does not introduce construction related pollution. It shall be diverted to its preconstruction discharge location in a manner that does not increase preconstruction flow rate and velocity and protects contiguous properties and waterways from erosion. The Contractor shall submit a Type 2 Working Drawing consisting of the method for performing this Work.

8-01.3(1)E Detention/Retention Pond Construction

This section is revised to read:

Permanent or temporary ponds shall be constructed before beginning other grading and excavation Work in the area that drains into that pond. Detention/retention ponds may be constructed concurrently with grading and excavation when allowed by the Engineer. Temporary conveyances shall be installed concurrently with grading in accordance with the TESC Plan so that newly graded areas drain to the pond as they are exposed.

8-01.3(2) Seeding, Fertilizing, and Mulching

This section's title is revised to read:

8-01.3(2) Temporary Seeding and Mulching

8-01.3(2)A Preparation for Application

This section is revised to read:

A cleated roller, crawler tractor, or similar equipment, which forms longitudinal depressions at least 2 inches deep shall be used for compaction and preparation of the surface to be seeded. The entire area shall be uniformly covered with longitudinal depressions formed perpendicular to the natural flow of water on the slope. The soil shall be conditioned with sufficient water so the longitudinal depressions remain in the soil surface until completion of the seeding.

8-01.3(2)A1 Seeding

This section is deleted in its entirety.

8-01.3(2)A2 Temporary Seeding

This section is deleted in its entirety.

8-01.3(2)B Seeding and Fertilizing

This section, including title, is revised to read:

INFORMATIONAL COPY ONLY - NOT FOR BIDDING

8-01.3(2)B Temporary Seeding

Temporary grass seed shall be a commercially prepared mix, made up of low growing grass species that will grow without irrigation at the project location, and accepted by the Engineer. The application rate shall be two pounds per 1000 square feet.

The Contractor shall notify the Engineer not less than 24 hours in advance of any seeding operation and shall not begin the Work until areas prepared or designated for seeding have been accepted. Following the Engineer's acceptance, seeding of the accepted slopes shall begin immediately.

Temporary seeding may be sown at any time allowed by the Engineer. Temporary seeding shall be sown by one of the following methods:

1. A hydro seeder that utilizes water as the carrying agent, and maintains continuous agitation through paddle blades. It shall have an operating capacity sufficient to agitate, suspend, and mix into a homogeneous slurry the specified amount of seed and water or other material. Distribution and discharge lines shall be large enough to prevent stoppage and shall be equipped with a set of hydraulic discharge spray nozzles that will provide a uniform distribution of the slurry.

2. Blower equipment with an adjustable disseminating device capable of maintaining a constant, measured rate of material discharge that will ensure an even distribution of seed at the rates specified.

3. Power-drawn drills or seeders.

4. Areas in which the above methods are impractical may be seeded by hand methods.

When seeding by hand, the seed shall be incorporated into the top ¼ inch of soil by hand raking or other method that is allowed by the Engineer.

Seed applied using a hydroseeder shall have a tracer added to visibly aid uniform application. This tracer shall not be harmful to plant, aquatic, or animal life. If Short-Term Mulch is used as a tracer, the application rate shall not exceed 250 pounds per acre.

Seed and fertilizer may be applied in one application provided that the fertilizer is placed in the hydroseeder tank no more than 1 hour prior to application.

8-01.3(2)D Mulching

This section, including title, is revised to read:

8-01.3(2)D Temporary Mulching

Temporary mulch shall be straw, wood strand, or HECP mulch and shall be used for the purpose of erosion control by protecting bare soil surface from particle displacement. Mulch shall not be applied below the anticipated water level of ditch slopes, pond bottoms, and stream banks. HECP mulch shall not be used within the Ordinary High Water Mark. Non-HECP mulches applied below the anticipated water level shall be removed or anchored down so that it cannot move or float, at no additional expense to the Contracting Agency.

Straw or wood strand mulch shall be applied at a rate to achieve at least 95 percent visual blockage of the soil surface.

INFORMATIONAL COPY ONLY - NOT FOR BIDDING

Short Term Mulch shall be hydraulically applied at the rate of 2500 pounds per acre and may be applied in one lift.

Moderate Term Mulch and Long Term Mulch shall be hydraulically applied at the rate of 3500 pounds per acre with no more than 2000 pounds applied in any single lift.

Mulch sprayed on signs or sign Structures shall be removed the same day.

Areas not accessible by mulching equipment shall be mulched by accepted hand methods.

8-01.3(2)F Dates for Application of Final Seed, Fertilizer, and Mulch

This section is deleted in its entirety.

8-01.3(2)G Protection and Care of Seeded Areas

This section is deleted in its entirety.

8-01.3(2)H Inspection

This section is deleted in its entirety.

8-01.3(2)I Mowing

This section is deleted in its entirety.

8-01.3(3) Placing Biodegradable Erosion Control Blanket

This section's title is revised to read:

8-01.3(3) Placing Erosion Control Blanket

The first sentence of the first paragraph is revised to read:

Erosion Control Blankets are used as an erosion prevention device and to enhance the establishment of vegetation.

The second paragraph is revised to read:

When used to enhance the establishment of seeded areas, seeding and fertilizing shall be done prior to blanket installation.

8-01.3(4) Placing Compost Blanket

This section is revised to read:

Compost blankets are used for erosion control. Compost blanket shall be only be placed on ground surfaces that are steeper than 3-foot horizontal and 1-foot vertical though steeper slopes shall be broken by wattles or compost socks placed according to the Standard Plans. Compost shall be placed to a depth of 3 inches over bare soil. An organic tackifier shall be placed over the entire composted area when dry or windy conditions are present or expected. The tackifier shall be applied immediately after the application of compost to prevent compost from leaving the composted area.

Medium compost shall be used for the compost blanket. Compost may serve the purpose of soil amendment as specified in Section 8-02.3(6).

8-01.3(5) Plastic Covering

The first paragraph is revised to read:

INFORMATIONAL COPY ONLY - NOT FOR BIDDING

Erosion Control – Plastic coverings used to temporarily cover stockpiled materials, slopes or bare soils shall be installed and maintained in a way that prevents water from intruding under the plastic and prevents the plastic cover from being damaged by wind. Plastic coverings shall be placed with at least a 12-inch overlap of all seams and be a minimum of 6 mils thick. Use soil stabilization and energy dissipation BMPs to minimize the erosive energy flows coming off sloped areas of plastic (e.g., toe of slope). When feasible, prevent the clean runoff from plastic from hitting bare soil. Direct flows from plastic to stabilized outlet areas.

8-01.3(7) Stabilized Construction Entrance

The first paragraph is revised to read:

Temporary stabilized construction entrance shall be constructed in accordance with the *Standard Plans*, prior to construction vehicles entering the roadway from locations that generate sediment track out on the roadway. Material used for stabilized construction entrance shall be free of extraneous materials that may cause or contribute to track out.

8-01.3(8) Street Cleaning

This section is revised to read:

Self-propelled pickup street sweepers shall be used to remove and collect dirt and other debris from the Roadway. The street sweeper shall effectively collect these materials and prevent them from being washed or blown off the Roadway or into waters of the State. Street sweepers shall not generate fugitive dust and shall be designed and operated in compliance with applicable air quality standards. Material collected by the street sweeper shall be disposed of in accordance with Section 2-03.3(7)C.

When allowed by the Engineer, power broom sweepers may be used in non-sensitive areas. The broom sweeper shall sweep dirt and other debris from the roadway into the work area. The swept material shall be prevented from entering or washing into waters of the State.

Street washing with water will require the concurrence of the Engineer.

8-01.3(12) Compost Socks

The first two sentences of the first paragraph are revised to read:

Compost socks are used to disperse flow and sediment. Compost socks shall be installed as soon as construction will allow but before flow conditions create erosive flows or discharges from the site. Compost socks shall be installed prior to any mulching or compost placement.

8-01.3(13) Temporary Curb

The last two sentences of the second paragraph are revised to read:

Temporary curbs shall be a minimum of 4 inches in height. Temporary curb shall be installed so that ponding does not occur in the adjacent roadway.

8-01.3(14) Temporary Pipe Slope Drain

The third and fourth paragraphs are revised to read:

The pipe fittings shall be water tight and the pipe secured to the slope with metal posts, wood stakes, or sand bags.

INFORMATIONAL COPY ONLY - NOT FOR BIDDING

The water shall be discharged to a stabilized conveyance, sediment trap, stormwater pond, rock splash pad, or vegetated strip, in a manner to prevent erosion and maintain water quality compliance.

The last paragraph is deleted.

8-01.3(15) Maintenance

This section is revised to read:

Erosion and sediment control BMPs shall be maintained or adaptively managed as required by the CSWGP until the Engineer determines they are no longer needed. When deficiencies in functional performance are identified, the deficiencies shall be rectified immediately.

The BMPs shall be inspected on the schedule outlined in Section 8-01.3(1)B for damage and sediment deposits. Damage to or undercutting of BMPs shall be repaired immediately.

In areas where the Contractor's activities have compromised the erosion control functions of the existing grasses, the Contractor shall overseed at no additional cost to the Contracting Agency.

The quarry spalls of construction entrances shall be refreshed, replaced, or screened to maintain voids between the spalls for collecting mud and dirt.

Unless otherwise specified, when the depth of accumulated sediment and debris reaches approximately ⅓ the height of the BMP the deposits shall be removed. Debris or contaminated sediment shall be disposed of in accordance with Section 2-03.3(7)C. Clean sediments may be stabilized on-site using BMPs as allowed by the Engineer.

8-01.3(16) Removal

This section is revised to read:

The Contractor shall remove all temporary BMPs, all associated hardware and associated accumulated sediment deposition from the project limits prior to Physical Completion unless otherwise allowed by the Engineer. When the temporary BMP materials are made of natural plant fibers unaltered by synthetic materials the Engineer may allow leaving the BMP in place.

The Contractor shall remove BMPs and associated hardware in a way that minimizes soil disturbance. The Contractor shall permanently stabilize all bare and disturbed soil after removal of BMPs. If the installation and use of the erosion control BMPs have compacted or otherwise rendered the soil inhospitable to plant growth, such as construction entrances, the Contractor shall take measures to rehabilitate the soil to facilitate plant growth. This may include, but is not limited to, ripping the soil, incorporating soil amendments, or seeding with the specified seed.

At the request of the Contractor and at the sole discretion of the Engineer the CSWGP may be transferred back to the Contracting Agency. Approval of the Transfer of Coverage request will require the following:

1. All other Work required for Contract Completion has been completed.

2. All Work required for compliance with the CSWGP has been completed to the maximum extent possible. This includes removal of BMPs that are no longer needed and the site has undergone all Stabilization identified for meeting the requirements of Final Stabilization in the CSWGP.

INFORMATIONAL COPY ONLY - NOT FOR BIDDING

3. An Equitable Adjustment change order for the cost of Work that has not been completed by the Contractor.

4. Submittal of the Washington State Department of Ecology Transfer of Coverage form (Ecology form ECY 020-87a) to the Engineer.

If the Engineer approves the transfer of coverage back to the Contracting Agency, the requirement in Section 1-07.5(3) for the Contractor's submittal of the Notice of Termination form to the Washington State Department of Ecology will not apply.

8-01.4 Measurement

This section's content is deleted and replaced with the following new subsections:

8-01.4(1) Lump Sum Bid for Project (No Unit Items)

When the Bid Proposal contains the item "Erosion Control and Water Pollution Prevention" there will be no measurement of unit or force account items for Work defined in Section 8-01 except as described in Sections 8-01.4(3) and 8-01.4(4). Also, except as described in Section 8-01.4(3), all of Sections 8-01.4(2) and 8-01.5(2) are deleted.

8-01.4(2) Item Bids

When the Proposal does not contain the items "Erosion Control and Water Pollution Prevention", Section 8-01.4(1) and 8-01.5(1) are deleted and the Bid Proposal will contain some or all of the following items measured as noted.

ESC lead will be measured per day for each day that an inspection is made and a report is filed.

Erosion control blanket and plastic covering will be measured by the square yard along the ground slope line of surface area covered and accepted.

Turbidity curtains will be measured by the linear foot along the ground line of the installed curtain.

Check dams will be measured per linear foot one time only along the ground line of the completed check dam. No additional measurement will be made for check dams that are required to be rehabilitated or replaced due to wear.

Stabilized construction entrances will be measured by the square yard by ground slope measurement for each entrance constructed.

Tire wash facilities will be measured per each for each tire wash installed.

Street cleaning will be measured by the hour for the actual time spent cleaning pavement, refilling with water, dumping and transport to and from cleaning locations within the project limits, as authorized by the Engineer. Time to mobilize the equipment to or from the project limits on which street cleaning is required will not be measured.

Inlet protections will be measured per each for each initial installation at a drainage structure.

Silt fence, gravel filter, compost berms, and wood chip berms will be measured by the linear foot along the ground line of the completed barrier.

INFORMATIONAL COPY ONLY - NOT FOR BIDDING

Wattles and compost socks will be measured by the linear foot.

Temporary curbs will be measured by the linear foot along the ground line of the completed installation.

Temporary pipe slope drains will be measured by the linear foot along the flow line of the pipe.

Coir logs will be measured by the linear foot along the ground line of the completed installation.

Outlet protections will be measured per each initial installation at an outlet location.

Temporary seeding, temporary mulching, and tackifiers will be measured by the acre by ground slope measurement.

Compost blanket will be measured by the square yard by ground slope surface area covered and accepted.

8-01.4(3) Reinstating Unit Items with Lump Sum Erosion Control and Water Pollution Prevention

The Contract Provisions may establish the project as lump sum, in accordance with Section 8-01.4(1) and also include one or more of the items included above in Section 8-01.4(2). When that occurs, the corresponding measurement provision in Section 8-01.4(2) is not deleted and the Work under that item will be measured as specified.

8-01.4(4) Items not included with Lump Sum Erosion Control and Water Pollution Prevention

Compost blanket will be measured by the square yard by ground slope surface area covered and accepted.

Temporary mulch will be measured by the acre by ground slope surface area covered and accepted.

High visibility fence will be measured by the linear foot along the ground line of the completed fence.

8-01.5 Payment

This section's content is deleted and replaced with the following new subsections:

8-01.5(1) Lump Sum Bid for Project (No Unit Items)

Payment will be made for the following Bid item when it is included in the Proposal:

"Erosion Control and Water Pollution Prevention", lump sum.

The lump sum Contract price for "Erosion Control and Water Pollution Prevention" shall be full pay to perform the Work as described in Section 8-01 except for costs compensated by Bid Proposal items inserted through Contract Provisions as described in Section 8-01.4(2). Progress payments for the lump sum item "Erosion Control and Water Pollution Prevention" will be made as follows:

1. The Contracting Agency will pay 15 percent of the bid amount for the initial set up for the item. Initial set up includes the following:

INFORMATIONAL COPY ONLY - NOT FOR BIDDING

a. Acceptance of the TESC Plan provided by the Contracting Agency or submittal of a new TESC Plan,

b. Submittal of a schedule for the installation of the BMPs, and

c. Identifying water quality sampling locations.

2. 70 percent of the bid amount will be paid in accordance with Section 1-09.9.

3. Once the project is physically complete and copies of the all reports submitted to the Washington State Department of Ecology have been submitted to the Engineer, and, if applicable, transference of the CSWGP back to the Contracting Agency is complete, the remaining 15 percent of the bid amount shall be paid in accordance with Section 1-09.9.

8-01.5(2) Item Bids

"ESC Lead", per day.

"Turbidity Curtain", per linear foot.

"Erosion Control Blanket", per square yard.

"Plastic Covering", per square yard.

"Check Dam", per linear foot.

"Inlet Protection", per each.

"Gravel Filter Berm", per linear foot.

"Stabilized Construction Entrance", per square yard.

"Street Cleaning", per hour.

"Silt Fence", per linear foot.

"Wood Chip Berm", per linear foot.

"Compost Berm", per linear foot.

"Wattle", per linear foot.

"Compost Sock", per linear foot.

"Coir Log", per linear foot.

"Temporary Curb", per linear foot.

"Temporary Pipe Slope Drain", per linear foot.

"Temporary Seeding", per acre.

"Temporary Mulching", per acre.

INFORMATIONAL COPY ONLY - NOT FOR BIDDING

"Compost Blanket", per square yard.

"Outlet Protection", per each.

"Tackifier", per acre.

"Erosion/Water Pollution Control", by force account as provided in Section 1-09.6.

Maintenance and removal of erosion and water pollution control devices including removal and disposal of sediment, stabilization and rehabilitation of soil disturbed by these activities, and any additional Work deemed necessary by the Engineer to control erosion and water pollution will be paid by force account in accordance with Section 1-09.6.

To provide a common Proposal for all Bidders, the Contracting Agency has entered an amount in the Proposal to become a part of the Contractor's total Bid.

8-01.5(3) Reinstating Unit Items with Lump Sum Erosion Control and Water Pollution Prevention

The Contract may establish the project as lump sum, in accordance with Section 8-01.4(1) and also reinstate the measurement of one or more of the items described in Section 8-01.4(2), except for Erosion/Water Pollution Control, by force account. When that occurs, the corresponding payment provision in Section 8-01.5(2) is not deleted and the Work under that item will be paid as specified.

8-01.5(4) Items not included with Lump Sum Erosion Control and Water Pollution Prevention

Payment will be made for the following Bid item when it is included in the Proposal:

"High Visibility Fence", per linear foot.

Section 8-02, Roadside Restoration
April 1, 2019

This section, including all subsections, is revised to read:

8-02.1 Description

This Work consists of preserving, maintaining, establishing and augmenting vegetation on the roadsides and within mitigation or sundry site areas. It includes vegetation preservation, weed and pest control, furnishing and placing topsoil, compost, and soil amendments, and furnishing and planting seed, sod and plants of all forms and container types. It includes performing plant establishment activities and soil bioengineering. Work shall be performed in accordance with these Specifications and as shown in the Plans or as designated by the Engineer.

Trees, whips, shrubs, ground covers, cuttings, live stakes, live poles, live branches, rhizomes, tubers, rootstock, and seedlings will hereinafter be referred to collectively as "plants" or "plant material". Grass, wildflowers, and other plant materials installed in seed form will hereinafter be referred to collectively as "seed".

8-02.2 Materials

Materials shall meet the requirements of the following sections:

INFORMATIONAL COPY ONLY - NOT FOR BIDDING

Erosion Control and Roadside Planting	9-14
Water	9-25.2

Botanical identification and nomenclature of plant materials shall be based on descriptions by Hitchcock and Cronquist in "Flora of the Pacific Northwest". Botanical identification and nomenclature of plant material not found in "Flora" shall be based on Bailey in "Hortus Third" or superseding editions and amendments or as referenced in the Plans.

8-02.3 Construction Requirements

8-02.3(1) Responsibility During Construction

The Contractor shall prepare, install, and ensure adequate and proper care of all roadside seeded, planted, and lawn areas on the project until all plant establishment periods required by the Contract are complete or until Physical Completion of the project, whichever is last.

Adequate and proper care shall include, but is not limited to, keeping all plant material in a healthy, growing condition by watering, pruning, and other actions deemed necessary for plant health. This Work shall include keeping the project area free from insect infestation, weeds or unwanted vegetation, litter, and other debris along with retaining the finished grades and mulch in a neat uniform condition.

Existing desirable vegetation shall be saved and protected unless removal is required by the Contract or allowed by the Engineer.

The Contractor shall have sole responsibility for the maintenance and appearance of the roadside restoration.

8-02.3(2) Work Plans

Three Work Plan submittals exist under this Section:

1. Roadside Work Plan: This plan is required when Work will disturb the roadside beyond 20 feet from the pavement or where trees or native vegetation will be removed, the Contractor shall submit a Type 2 Working Drawing.

2. Weed and Pest Control Plan: This plan is required when the proposal contains the item "Weed and Pest Control," and prior to application of any chemicals or weed control activities, the Contractor shall submit a Type 2 Working Drawing.

3. Plant Establishment Plan: This plan is required when the proposal contains the item "PSIPE__", and prior to completion of Initial Planting, the Contractor shall submit a Type 2 Working Drawing.

8-02.3(2)A Roadside Work Plan

The Roadside Work Plan shall define the expected impacts to the roadside and restoration resulting from Work necessary to meet all Contract requirements. The Contractor shall define how the roadside restoration Work included in the Contract will be phased and coordinated with project Work such as earthwork, staging, access, erosion and water pollution control, irrigation, etc. The Roadside Work Plan shall include the following:

1. <u>Limiting impacts to roadsides:</u>

   a. Limits of Work including locations of staging or parking.

INFORMATIONAL COPY ONLY - NOT FOR BIDDING

b. Means and methods for vegetation protection (in accordance with Section 1-07.16(2)).

c. Locations outside of clearing limits where vegetation shall be removed to provide access routes or other needs to accomplish the Work.

d. Plans for removal, preservation and stockpile of topsoil or other native materials, if outside of clearing and grubbing limits and within the project limits.

2. Roadside Restoration:

a. Plan for propagation and procurement of plants, ground preparation for planting, and installation of plants.

b. Means and methods to limit soil compaction where seeding and planting are to occur, such as steel plates, hog fuel access roads, wood mats for sensitive areas (including removal) and decompaction for unavoidable impacts.

c. Plan and timing to incorporate or remove erosion control items.

3. Lawn Installation:

a. Schedule for lawn installation work.

b. Establishment and maintenance of lawns.

8-02.3(2)B Weed and Pest Control Plan

The Weed and Pest Control Plan shall describe all weed and pest control needs for the project.

The plan shall be prepared and signed by a licensed Commercial Pest Control Operator or Consultant. The plan for control of weeds and pests on the Contract in accordance with Section 8-02.3(3) shall include the following:

1. Names of plan preparer and pesticide operators, including contact information. The Contractor shall furnish the Engineer evidence that all operators are licensed with appropriate endorsements, and that the pesticide used is registered for use by the Washington State Department of Agriculture.

2. Means and methods of weed control, including mechanical and/or chemical.

3. Schedule for weed control including re-entry times for pesticide application by pesticide type.

4. Proposed pesticide use in accordance with Section 8-02.3(3)A: name, application rate, and Safety Data Sheets of all proposed pesticides. Include a copy of the current product label for each pesticide to be used.

5. Plan to ensure worker safety until pesticide re-entry periods are met.

INFORMATIONAL COPY ONLY - NOT FOR BIDDING

8-02.3(2)C Plant Establishment Plan

The Plant Establishment Plan shall describe activities necessary to ensure continued health and vigor of planted and seeded areas in accordance with the requirements of Sections 8-02.3(12) and 8-02.3(13). Should the plan become unworkable at any time during the first-year plant establishment, the Contractor shall submit a revised plan prior to proceeding with further Work. The Plant Establishment Plan shall include:

1. Proposed scheduling of joint inspection meetings, activities, materials, equipment to be utilized for the first-year plant establishment.

2. Proposed adaptive management activities to ensure successful establishment of seeded, sodded, and planted areas.

3. A contact person.

4. Management of the irrigation system, when applicable.

8-02.3(3) Weed and Pest Control

The Contractor shall control weed and pest species within the project limits using integrated pest management principles consisting of mechanical, biological, and chemical controls that are outlined in the Weed and Pest Control Plan or as designated by the Engineer. Controlling weeds consists of killing and removing weeds by chemical, mechanical, and hand methods.

8-02.3(3)A Chemical Pesticides

Chemical pesticides include, but are not restricted to, any substance or mixture of substances intended for preventing, destroying, repelling or mitigating any pest, including but not limited to, insecticides, herbicides, fungicides, adjuvants, and additives, including plant regulators, defoliants and desiccants. The Contractor shall apply chemical pesticides in accordance with the label recommendations, the Washington State Department of Ecology, local sensitive area ordinances, and Washington State Department of Agriculture laws and regulations. Only those pesticides listed in the table Herbicides Approved for Use on WSDOT Rights of Way and accepted as part of the Weed and Pest Control Plan or by written authorization from the Engineer may be used (www.wsdot.wa.gov/maintenance/roadside/herbicide_use.htm).

The applicator shall be licensed by the State of Washington as a Commercial Applicator or Commercial Operator, with additional endorsements as required by the Special Provisions or the proposed weed control plan. All chemical pesticides shall be delivered to the job site in the original containers, or if pre-mixed off-site, a certification of the components and formulation from the supplier is required. The licensed applicator or operator shall complete WSDOT Form 540-509, Commercial Pesticide Application Record, each day the pesticide is applied and furnish a copy to the Engineer by the following business day.

The Contractor shall ensure confinement of the chemicals within the designated areas. The use of spray chemical pesticides shall require the use of anti-drift and activating agents and a spray pattern indicator unless otherwise allowed by the Engineer.

INFORMATIONAL COPY ONLY - NOT FOR BIDDING

The Contractor shall assume all responsibility for rendering any area unsatisfactory for planting by reason of chemical application. Damage to adjacent areas, either on or off the Highway Right of Way, shall be repaired to the satisfaction of the Engineer or the property owner at no additional cost to the Contracting Agency.

8-02.3(3)B Planting and Lawn Area Weed Control

Planting and lawn area weed control consists of controlling weeds and pests in planted and lawn areas shown in the Plans. This Work is included in the bid items for planting and lawn installation.

All planting and lawn areas shall be prepared so that they are weed and debris free at the time of planting and until completion of the project. The planting areas shall include the entire ground surface, regardless of cover, areas around plants, and those areas shown in the Plans.

Within planting or lawn areas, all species that are not shown in the Plans are unwanted and shall be controlled unless specifically allowed by the Engineer to remain.

Grass growing within the mulch ring of a plant, including grass applied in accordance with Sections 8-01.3(2)A1, 8-02.3(9) or 8-02.3(10), shall be considered a weed and shall be controlled on the project in accordance with the weed and pest control plan.

All applications of post-emergent herbicides shall be made while green and growing tissue is present. Residual herbicides shall not be used where rhizomatous species or perennial species are indicated.

Should unwanted vegetation reach the flowering and seed stage in violation of these Specifications, the Contractor shall physically remove and bag the seed heads prior to seed dispersion. All physically removed vegetation and seed heads shall be disposed of off-site at no cost to the Contracting Agency.

8-02.3(3)C Project Area Weed and Pest Control

The Contractor shall control weeds not otherwise covered in accordance with Section 8-02.3(3)B, in all areas within the project limits, including erosion control seeding areas and vegetation preservation areas, as designated by the Engineer.

When the Bid Item "Project Area Weed and Pest Control" is included in the Contract, the Contractor shall also control all weeds specified as noxious by the Washington State Department of Agriculture, the local Weed District, or the County Noxious Weed Control Board outside of planting areas within the project limits.

8-02.3(4) Topsoil

Topsoil shall not be worked or placed when the ground or topsoil is frozen, or excessively wet.

The Contractor shall protect topsoil stockpiled for project use to prevent erosion and weed growth. Weed growth on topsoil stockpile sites shall be immediately eliminated in accordance with the accepted Weed and Pest Control Plan and Section 8-02.3(3)C.

The subsoil where topsoil is to be placed shall be tilled to a depth of 1 foot or as specified in the Special Provisions or the Plans. Topsoil of the type specified shall be evenly spread over the specified areas to the depth shown in the Plans or as otherwise ordered

INFORMATIONAL COPY ONLY - NOT FOR BIDDING

by the Engineer. Topsoil depths greater than 6 inches shall be placed in lifts no more than 6 inches in depth. The first lift of topsoil shall be incorporated with sub-soil to a depth of 8 inches and subsequent lifts placed and lightly tamped between lifts. After the topsoil has been spread, all large clods, hard lumps, and rocks 2 inches in diameter and larger, and litter shall be raked up, removed, and disposed.

8-02.3(4)A Topsoil Type A

Topsoil Type A shall be as specified in the Special Provisions. The Contractor shall submit a certification by the supplier that the contents of the Topsoil meet the requirements in the Special Provisions.

8-02.3(4)B Topsoil Type B

Topsoil Type B shall be naturally occurring topsoil taken from within the project limits and shall meet the requirements of Section 9-14.1(2). Topsoil Type B shall be taken from areas shown in the Plans to the designated depth and stockpiled at locations that will not interfere with the construction of the project, and outside of sensitive areas, as allowed by the Engineer. A minimum of two weeks prior to excavation of Topsoil Type B, the Contractor shall pre-treat the vegetation on the designated Topsoil Type B areas according to the Weed and Pest Control Plan. Areas beyond the slope stakes shall be disturbed as little as possible in the above operations and under no circumstances shall Topsoil Type B be stockpiled within 10 feet of any existing tree or vegetation area designated to be saved and protected. The Contractor shall protect topsoil stockpile from weed infestation.

The Contractor shall set aside sufficient material to satisfy the needs of the project.

Upon completion of topsoil placement, the Contractor shall dispose of remaining stockpiled Topsoil Type B not required for use on the project at no additional expense to the Contracting Agency in accordance with Section 2-03.3(7)C.

Should a shortage of Topsoil Type B occur, and the Contractor has wasted or otherwise disposed of topsoil material, the Contractor shall furnish Topsoil Type A or C at no additional expense to the Contracting Agency.

8-02.3(4)C Topsoil Type C

Topsoil Type C shall be naturally occurring topsoil obtained from a source provided by the Contractor outside of the Contracting Agency-owned Right of Way. Topsoil Type C shall meet the requirements of Sections 8-02.3(4)B and 9-14.1(3). The Contractor shall not begin removal of Topsoil Type C from the proposed source until the material has been allowed for use by the Engineer.

8-02.3(5) Roadside Seeding, Lawn and Planting Area Preparation

This Work includes preparing worked areas for the installation of all types of permanent erosion control planting. Work shall be conducted so the flow lines in drainage channels are maintained. Material displaced by the Contractor's operations that interferes with drainage shall be removed from the channel and disposed of as allowed by the Engineer.

8-02.3(5)A Seeding Area Preparation

The Contractor shall prepare roadside seeding areas as follows:

1. Remove all excess material, debris, stumps, and rocks greater than 3 inches in diameter from areas to be seeded. Dispose of removed materials offsite.

INFORMATIONAL COPY ONLY - NOT FOR BIDDING

2. Prepare roadside seeding area to a weed free and bare condition.

3. Bring area to uniform grade and install topsoil, soil amendments, or compost as specified. Any slopes 3(H) to 1(V) or steeper shall not be tilled unless otherwise specified.

4. Compact to provide a reasonably firm but friable seedbed; tractor walk to uniformly cover the surface with longitudinal depressions at least 2 inches deep formed perpendicular to the natural flow of water on the slope. Condition the soil with sufficient water so the longitudinal depressions remain in the soil surface until completion of the seeding.

5. Seed and mulch within 2 days of preparation.

8-02.3(5)B Lawn Area Preparation

The Contractor shall prepare lawn areas as follows:

1. Prepare lawn area to a weed free and bare condition in accordance with Section 8-02.3(3)B.

2. Remove excess material, stumps, wood or rocks over 3 inches in diameter and remove from site.

3. Bring area to uniform grade and install topsoil or soil amendments in accordance with Section 8-02.3(4) and 8-02.3(6).

4. Till to an 8-inch depth, rake to a smooth even grade without low areas that trap water, and compact with a 50-pound roller. The finished grade of the soil shall be 1 inch below the top of all curbs, junction and valve boxes, walks, driveways, and other Structures.

5. Seed or sod the area within two days of preparation.

8-02.3(5)C Planting Area Preparation

The Contractor shall prepare planting areas as follows:

1. Prepare planting area to a weed free and bare condition in accordance with Section 8-02.3(3)B.

2. Decompact soil to a depth of 18 inches where construction activities have taken place or where native soils are compacted.

3. Return soil to uniform grade even with surrounding areas, leaving no holes or mounds over 3 inches in depth or height.

4. Remove excess material, stumps, wood or rocks over 3 inches in diameter and remove from site.

5. Apply compost or other amendments as indicated in the plans and in accordance with Section 8-02.3(6).

6. Cultivate amendments to a depth of 12 inches to provide a reasonably firm but friable planting area. Do not till any slopes 3(H) to 1(V) or steeper.

INFORMATIONAL COPY ONLY - NOT FOR BIDDING

7. Return soil to a uniform finished grade, 1 inch, or the specified depth of mulch plus 1 inch, below walks, curbs, junction and valve boxes, catch basins, and driveways, unless otherwise specified.

8. Begin planting and mulching the area within two days of final preparation.

8-02.3(6) Soil Amendments

The Contractor shall place soil amendments of the type, quality, and quantities specified where shown in the Plans or as specified in the Special Provisions. Areas receiving soil amendments shall be bare soil or vegetation free prior to application. All soil amendments shall be installed as shown in the Plans within 30 calendar days after delivery to the project site.

8-02.3(6)A Compost

Compost used for soil amendments shall be Fine Compost unless otherwise designated in the Plans. When compost blanket is used for temporary erosion control, the compost blanket may be incorporated into the soil immediately prior to planting when used as compost soil amendment. The area shall be prepared in accordance with Section 8-02.3(5) prior to placing compost.

8-02.3(6)B Fertilizers

The Contractor shall apply fertilizer in the form, mixture, and rate specified in the Special Provisions or as directed by the Engineer. Application procedures shall be in accordance with the manufacturer's recommendations unless otherwise specified in the Special Provisions.

The Contractor shall submit a guaranteed fertilizer analysis label for the selected product a minimum of one week prior to application for acceptance. Following the Engineer's acceptance, fertilizing of the accepted ground or vegetated surfaces shall begin immediately.

In seeding and lawn areas to be fertilized, the fertilizer shall be applied concurrently with the seed. When fertilizer is hydraulically applied, the fertilizer shall be suitable for application with seeding as specified in Section 8-02.3(9)C. If hydroseeding, the fertilizer shall be placed in the hydroseeder tank no more than 1 hour prior to application.

Fertilizers for planting areas shall be applied concurrently with compost and applied prior to incorporation, unless tablet form fertilizer is specified. Where tablet form fertilizer is specified, fertilizer shall be applied concurrently with plant installation.

Fertilizer sprayed on signs or sign structures shall be removed the same day.

Areas not accessible by fertilizing equipment shall be fertilized by allowed hand methods.

Second Application: A second application of fertilizer shall be applied as specified in the Special Provisions at the locations designated in the Plans. The fertilizer shall be applied during the months of March, April, or May of the following year after the initial seeding, planting, or lawn installation. The fertilizer shall be dry granular pellets or pearls and applied in accordance with the manufacturer's recommendations or as specified in the Special Provisions.

INFORMATIONAL COPY ONLY - NOT FOR BIDDING

8-02.3(7) Layout of Planting, Lawn and Seeding Areas

The Contractor shall lay out and prepare planting and lawn areas and receive the Engineer's acceptance of layout and preparation prior to any installation activities. The Contractor shall stake the location of all trees larger than 1-inch caliper and the perimeter of all planting areas for acceptance by the Engineer prior to any installation activities.

The Contractor shall locate all trees to be planted in mowable grass areas a minimum of 10 feet from the edge of planting areas, other trees, fence lines, and bottom of ditches unless otherwise specified.

Tree locations shown in the Plans shall be considered approximate unless shown with stationing and offset distance. In irrigated areas, trees shall be located so their trunk is a minimum of ⅓ of the spray radius away from the nearest sprinkler head.

Unless otherwise shown, planting areas located adjacent to Roadways shall begin 6 feet from the edge of shoulder on roadway fills and begin 5 feet up on the back slope from the bottom on roadway cut sections. Plants within planting areas shall be located such that mature branching pattern will not block sight distance, signs, or other traffic-related devices. No trees shall be placed where the mature canopy will grow to within 10 feet of existing power lines. Where roadside ditches are present, planting areas shall begin 5 feet from the centerline of the ditch unless shown otherwise in the Plans.

8-02.3(8) Planting

8-02.3(8)A Dates and Conditions for Planting

No plant material shall be planted until it has been inspected and accepted for planting by the Engineer. Rejected material shall be removed from the project site immediately. All plants for the project or a sufficient quantity to plant 1-acre of the site, whichever is less, shall be received on site prior to the Engineer beginning inspection of the plants.

Under no circumstances will planting be permitted during unsuitable soil or weather conditions as determined by the Engineer. Unsuitable conditions may include frozen soil, freezing weather, saturated soil, standing water, high winds, heavy rains, and high water levels. The ground shall be moist at the time of planting. All planting shall be accomplished during the following periods:

1. Non-Irrigated Plant Material
   Western Washington (West of the Cascade Mountain Crest) – October 1 to March 1.
   Eastern Washington (East of the Cascade Mountain Crest) – October 1 to November 15.

2. Irrigated Plant Material

In irrigated areas, plant material shall not be installed until the irrigation system is fully operational and accepted by the Engineer. Trees and shrubs may be planted in irrigated areas during the non-irrigated planting window before the irrigation system is functional with the written concurrence of the Engineer only if the irrigation system is guaranteed to be operational prior to the end of the non-irrigated planting window.

8-02.3(8)B Plant Installation

The Contractor shall handle plant material in the following manner:

INFORMATIONAL COPY ONLY - NOT FOR BIDDING

1. Root systems shall be kept covered and damp at all times. Plant material shall be kept in containers until the time of planting.

2. Roots shall not be bunched, curled, twisted, or unreasonably bent when placed in the planting hole. Bare root plant material shall be dormant at the time of harvesting and planting. The root systems of all bare root plant material shall be dipped in a slurry immediately prior to planting.

3. Plant material supplied in wrapped balls shall not be removed from the wrapping until the time of planting at the planting location. The root system of balled plant material shall be moist at the time of planting. Root balls shall be loosened prior to planting. All burlap, baskets, string, wire and other such materials shall be removed from the hole when planting balled plants.

4. Plant cutting material shall be dormant at the time of cutting and planting. All cuttings shall be installed immediately if buds begin to swell.

5. Plants shall be placed with the crown at the finished grade. In their final position, plants shall have their top true root (not adventitious root) no more than 1 inch below the soil surface, no matter where that root was located in the original root ball or container. The backfill material, including container and root ball soil, shall be thoroughly watered on the same day that planting occurs regardless of season.

When installing plants, the Contractor shall dig planting holes three times the diameter of the container or root ball size. Any glazed surface of the planting hole shall be roughened prior to planting.

8-02.3(8)C Pruning, Staking, Guying, and Wrapping

Plants shall be pruned at the time of planting, only to remove minor broken or damaged twigs, branches or roots. Pruning shall be performed with a sharp tool and shall be done in such a manner as to retain or to encourage natural growth characteristics of the plants. All other pruning shall be performed only after the plants have been in the ground at least 1 year and when plants are dormant.

Trees shall only be staked when so noted in the Plans. Each tree shall be staked or guyed before completion of the backfilling in accordance with the details shown in the Plans.

Trees shall be wrapped when so noted in the Plans.

8-02.3(9) Seeding, Fertilizing, and Mulching

For all seed, the Contractor shall furnish the following documentation to the Engineer:

1. The state or provincial seed dealer license and endorsements.

2. Copies of Washington State Department of Agriculture (WSDA) test results on each lot of seed. Test results shall be within six months prior to the date of application.

8-02.3(9)A Dates for Application of Seed

Unless otherwise allowed by the Engineer, the Contractor shall apply seed for permanent erosion control during the following periods:

INFORMATIONAL COPY ONLY - NOT FOR BIDDING

Western Washington[1] (West of the Cascade Mountain Crest)	Eastern Washington (East of the Cascade Mountain Crest)
March 1 through May 15 September 1 through October 1	October 1 through November 15
[1]Seeding may be allowed outside these dates when allowed by the Engineer.	

All roadway excavation and embankment ground surfaces that are completed to final grades shall be prepared and seeded during the first available seeding window. When environmental conditions are not conducive to satisfactory results, the Engineer may suspend the seeding Work until such time that the desired results are likely to be obtained. If seeding is suspended, temporary erosion control methods according to Section 8-01 shall be used to protect the bare soil until seeding conditions improve.

8-02.3(9)B Seeding and Fertilizing

The Contractor shall prepare the seeding area in accordance with Section 8-02.3(5)A and apply seed at the rate and mix specified in the Special Provisions. The Contractor shall notify the Engineer within 5 days in advance of any seeding operation and shall not begin the Work until areas prepared or designated for seeding have been accepted. Following the Engineer's acceptance, seeding of the accepted ground surfaces shall begin immediately.

Seeding shall not be done during windy weather or when the ground is frozen, or excessively wet.

When seeding by hand, the seed shall be incorporated into the top ¼ inch of soil by hand raking or other method that is allowed by the Engineer.

Seed applied as a separate operation using a hydroseeder shall have a tracer added to visibly aid uniform application. The tracer shall be HECP Short-Term Mulch applied at a rate of 200 to 250 pounds per acre and the tracer shall carry the measured specified seeding rate.

8-02.3(9)C Seeding with Fertilizers and Mulches

When the Proposal includes any variation of seeding, fertilizing, and without mulching, the seed and fertilizer shall be applied in one application followed by mulching. West of the Cascade Mountains, seed, fertilizer, and mulch may be completely applied in one application. East of the Cascades, seeding, fertilizing, and mulching shall not be applied as a single application unless allowed by the Engineer in writing prior to application. The fertilizing and mulching shall meet the requirements of Sections 8-02.3(6) and 8-02.3(11).

8-02.3(9)D Inspection

Seeded areas will be inspected upon completion of seeding, fertilizing, and mulching. The Work in any area will not be measured for payment until a uniform distribution of the materials is accomplished at the specified rate. Areas that have not received a uniform application of seed, fertilizer, and mulch at the specified rate, as determined by the Engineer, shall be re-seeded, re-fertilized, or re-mulched prior to payment for seeding within a designated area.

INFORMATIONAL COPY ONLY - NOT FOR BIDDING

8-02.3(9)E Protection and Care of Seeded Areas

The Contractor shall install and establish a stable and weed free stand of grass as specified within all designated permanent seeding areas. A stable stand of grass shall meet the following requirements:

1. A dense and uniform canopy cover, 70% for Western Washington and 50% for Eastern Washington, of specified species covers all seeded areas after 3 months of active growth following germination during the growing season. Canopy cover is defined as the cover of living and vigorous grass blades, leaves, and shoots of specified species. Volunteer species, weeds, woody plants, or other undesirable vegetation shall not factor into the canopy cover. Growth and establishment may require supplemental irrigation to meet cover requirements.

2. Stand health is evident by vigorously growing planted species having a uniform rich-green appearance and with no dead patches or major gaps of growth. A stand of grass that displays rusting, wilting, stunted growth, disease, yellowing or browning of leaves, or bare patches does not meet the stand health requirement.

3. The Contractor shall establish a stable stand of grass free of all weeds, non-specified grasses, and other undesirable vegetation. Weed control shall be in accordance with the Weed and Pest Control Plan and occur on a monthly basis during the establishment period and through the life of the Contract.

4. Remove all trash, rocks, construction debris, and other obstructions that may be detrimental to the continued establishment of future seeding.

In addition to the requirements of Section 1-07.13(1), restoration of eroded areas including clean up, removal, and proper disposal of eroded material, filling and raking of eroded areas with Topsoil Type A or fine compost, and re-application of the specified seed, fertilizer, and mulch shall occur at no additional cost to the Contracting Agency.

8-02.3(10) Lawn Installation

8-02.3(10)A Dates and Conditions for Lawn Installation

In irrigated areas, lawn installation shall not begin until the irrigation system is fully operational.

Unless otherwise allowed by the Engineer, seeded lawn installation shall be performed during the following time periods at the location shown:

Western Washington (West of the Cascade Mountain Crest)	Eastern Washington (East of the Cascade Mountain Crest)
March 1 through May 15 September 1 through October 1	October 1 through November 15
When irrigation system is operational March 1 through October 1	When irrigation system is operational March 1 through November 1

INFORMATIONAL COPY ONLY - NOT FOR BIDDING

8-02.3(10)B Lawn Seeding and Sodding

The Contractor shall prepare the lawn area in accordance with Section 8-02.3(5) and apply seed at the mix and rate of application as specified in the Special Provisions.

The Contractor shall have the option of sodding in lieu of seeding for lawn installation at no additional expense to the Contracting Agency. Seeding in lieu of sodding will not be allowed.

Seed placed by hand shall be raked into the soil. Following raking, the seeded soil shall be rolled with a smooth 50-pound roller. Sod strips shall be placed within 48 hours of being cut. Placement shall be without voids and have the end joints staggered. Following placement, the sod shall be rolled with a smooth roller to establish contact with the soil.

Barriers shall be erected, with warning signs where necessary, to preclude pedestrian traffic access to the newly placed lawn during the establishment period.

8-02.3(10)C Lawn Establishment

Lawn establishment shall consist of caring for all new lawn areas within the limits of the project.

The lawn establishment period shall begin immediately after the lawn seeding or sodding has been accepted by the Engineer and shall extend to the end of four mowings or 20 working days whichever is longer. The mowings shall be done in accordance with Section 8-02.3(10)D.

During the lawn establishment period, the Contractor shall ensure the continuing healthy growth of the turf. This care shall include keeping the project in a presentable condition including, but not limited to, removal of litter, mowing, trimming, removal of grass clippings, edging, fertilization, insecticide and fungicide applications, weed control, watering, repairing the irrigation system, and repair and reseeding all damaged areas.

Temporary barriers shall be removed only when directed by the Engineer.

All Work performed under lawn establishment shall comply with established turf management practices.

Acceptance of lawn planting as specified will be based on a uniform stand of grass and a uniform grade at the time of final inspection. The Contractor shall recultivate, re-grade, reseed, and refertilize areas that are bare or have a poor stand of grass or not having a uniform grade through any cause before final inspection at no additional cost to the Contracting Agency.

8-02.3(10)D Lawn Mowing

Lawn mowing shall begin immediately after the lawn establishment period has been accepted by the Engineer and shall extend to the end of the Contract or the first-year plant establishment, whichever is last.

The Contractor shall accomplish the following minimum requirements:

1. Mow, trim, and edge as often as conditions dictate, at a minimum, once per week between April and September. Maximum height of lawn shall not

INFORMATIONAL COPY ONLY - NOT FOR BIDDING

exceed 3 inches. The cutting height shall be 2 inches. Cuttings, trimmings, and edgings shall be disposed of off the project site. When the Engineer allows the use of a mulching mower, trimmings may be left in place.

2. Water as often as conditions dictate depending on weather and soil conditions.

3. Provide fertilizer, weed control, water, and other measures as necessary to establish and maintain a healthy stand of grass.

8-02.3(11) Mulch

Mulches associated with seeding and planting shall be of the type specified in the Special Provisions or as indicated in the Plans. The Contractor shall evenly apply mulch at the rates indicated in the Plans. Mulches shall not be placed below the anticipated water level of ditch slopes, pond bank slopes, and stream banks, or in areas of standing or flowing water.

8-02.3(11)A Mulch for Seeding Areas

The Contractor shall furnish and evenly apply Hydraulically Applied Erosion Control Product (HECP) Long Term Mulch at the rates indicated and in accordance with the Manufacturer's specifications unless otherwise specified.

HECP Long Term Mulch shall be hydraulically applied at the rate of 3500 pounds per acre with no more than 2000 pounds applied in any single lift. HECP mulch shall not be used within the Ordinary High Water Mark.

Mulch sprayed on signs or sign Structures shall be removed the same day.

Areas not accessible by mulching equipment shall be mulched by accepted hand methods.

HECP Long Term Mulch may be applied with seed and fertilizer west of the summit of the Cascade Range. East of the summit of the Cascade Range, seed and fertilizer shall be applied in a single application followed by the application of mulch.

8-02.3(11)B Bark or Woodchip Mulch

The Contractor shall apply bark or wood chip mulch of the type and depth specified where shown in the Plans or as specified in the Special Provisions.

The Contractor shall complete final grading and placement/incorporation of soil amendments within the planting area prior to placement of mulch. Areas receiving bark mulch shall be bare soil or vegetation free before application, except where trees and other plants are specifically identified in the Plans or designated by the Engineer to be saved and protected.

Bark or wood chip mulch shall be placed to a uniform non-compacted depth of 3 inches over all planting areas unless otherwise specified. Mulch shall be feathered to the base of the plant and 1 inch below the top of junction and valve boxes, curbs, and pavement edges.

Any contamination of the mulch due to the Contractor's operations shall be corrected to its former condition at no additional cost to the Contracting Agency. Mulch placed to a thickness greater than specified shall be at no additional cost to the Contracting Agency.

INFORMATIONAL COPY ONLY - NOT FOR BIDDING

The Contractor shall keep plant material crowns, runners, and branches free of mulch at all times.

8-02.3(11)C Bark or Woodchip Mulch Rings

The Contractor shall apply mulch rings around plants installed within existing vegetation areas or within seeded areas as shown in the Plans. Bark or wood chip mulch rings shall be applied to the surface of vegetation free amended soil in the isolated plant locations where shown in the Plans or as specified in the Special Provisions. Bark or wood chip mulch shall be placed to a uniform non-compacted depth of 3 inches to a radius of 2 feet around all plants within interplanted plant locations.

8-02.3(12) Completion of Initial Planting

Upon completion of the initial planting within a designated area, the Engineer will make an inspection of all planting areas. The Engineer will notify the Contractor, in writing, of any replacements or corrective action necessary to meet the plant installation requirements. The Contractor shall replace all plants and associated materials rejected or missing and correct unsatisfactory conditions.

Completion of the initial planting within a designated area includes the following conditions:

1. 100 percent of each of the plant material categories are installed as shown in the Plans.

2. Planting Area is cleaned up.

3. Repairs are completed, including but not limited to, full operation of the irrigation system.

4. Mulch coverage is complete.

5. All weeds are controlled.

8-02.3(13) Plant Establishment

Plant establishment consists of caring for all plants and planting areas within the project limits. The provisions of Sections 1-07.13(2) and 1-07.13(3) do not apply to this Section.

When the Proposal includes the bid item PSIPE____ (Plant Selection Including Plant Establishment), that bid item includes one year of plant establishment Work. The first year of plant establishment shall begin immediately upon written notification from the Engineer of the completion of initial planting for the project. The first-year plant establishment period shall be a minimum of one calendar year. The one calendar year shall be extended an amount equal to any periods where the Contractor does not comply with the plant establishment requirements and plan.

During the first-year plant establishment period, the Contractor shall perform all Work necessary to ensure the resumption and continued growth of the transplanted material. This Work shall include, but is not limited to, applying water, removing foreign, dead, or rejected plant material, maintaining all planting areas in a weed-free condition, and replacing all unsatisfactory plant material planted under the Contract. If plants are stolen or damaged by the acts of others, the Contracting Agency will pay invoice cost only for the replacement plants with no mark-up and the Contractor will be responsible for the

INFORMATIONAL COPY ONLY - NOT FOR BIDDING

labor to install the replacement plants. Other weed control within the project limits but outside of planting, lawn, or seeding areas shall be as specified in Section 8-02.3(3)C.

During the first year of plant establishment, the Contractor shall meet monthly or at an agreed upon schedule with the Engineer for the purpose of joint inspection of the planting material. The Contractor shall correct all unsatisfactory conditions identified by the Engineer within a 10-day period immediately following the inspection. If plant replacement is required, the Contractor shall, within the 10-day period, submit a plan and schedule for the plant procurement and replacement to occur during the planting period as designated in Section 8-02.3(8). At the end of the plant establishment period, plants that do not show normal growth shall be replaced and all staking and guying that remain on the project shall be removed unless otherwise allowed by the Engineer.

All automatic irrigation systems shall be operated fully automatic during the plant establishment period and until final acceptance of the Contract. Payment for water used to water in plants, or hand watering of plant material or lawn areas unless otherwise specified, is the responsibility of the Contractor during the first-year plant establishment period.

Subsequent year plant establishment periods shall begin immediately at the completion of the preceding year's plant establishment period. Each subsequent plant establishment period shall be one full calendar year in duration.

During the plant establishment period(s) after the first year plant establishment, the Work necessary for the continued healthy and vigorous growth of all plants material shall be performed as directed by the Engineer.

Payment for water used to water plants during the subsequent year(s) of plant establishment will be paid under the plant establishment item.

8-02.3(14) Plant Replacement

The Contractor shall be responsible for growing or arrange to provide sufficient plants for replacement of all plant material rejected through first-year plant establishment. All replacement plant material shall be inspected and accepted by the Engineer prior to installation. All rejected plant material shall be replaced with acceptable plants meeting the specifications and installed according to the requirements of this Section at dates allowed by the Engineer.

All replacement plants shall be of the same species as the plants they replace and meet the requirements of Section 9-14.8 unless otherwise allowed by the Engineer. Plants may vary in size reflecting one season of growth should the Contractor elect to hold plant material under nursery conditions for an additional year to serve as replacement plants. Replacement plant material larger than specified in the Plans shall meet the applicable section requirements of the ASNS for container class, ball size, spread, and branching characteristics.

8-02.3(15) Bioengineering

Bioengineering consists of using plant materials for the purpose of streambank or earthen slope construction and surface stabilization. This Work may include installing woody plant cuttings in various forms as well as part of streambank or earthen slope construction.

INFORMATIONAL COPY ONLY - NOT FOR BIDDING

8-02.3(15)A Fascines

Live fascines shall be constructed of live and dead cuttings bundled together with a diameter of 8 to 18 inches. Live cuttings shall be the species shown in the Plans. Dead branches may be cuttings from any woody, non-invasive plant native to the project area. Dead branches may be placed within the live fascine and on the side exposed to the air. Live branches shall be placed in contact with the soil along their entire length. Each live fascine must contain a minimum of eight live branches. Dead branches shall constitute no more than 40 percent of the total fascine content.

The total length of each live fascine shall be a minimum of 5 feet. Branches shall be bundled into log-like forms and bound with biodegradable twine spaced at 1-foot intervals along the entire length of the live fascine. Live fascines shall be installed horizontally in a trench whose depth shall be ½ the diameter of the live fascine. Secure the live fascine with live stakes 3 feet in length and ¾ inch in diameter placed at 18-inch intervals. A minimum of three live stakes shall be used per fascine. The live stakes shall be driven through the live fascine vertically into the slope. The ends of live fascines shall be woven together so that no gap remains between the two sections of the live fascine.

Prior to being covered with soil, the fascine shall be thoroughly watered. Once the fascine is covered with 6 inches of soil, the soil covering the fascine shall be thoroughly watered.

When used to remedy erosion areas, live fascines shall extend a minimum of two feet beyond the visible area of erosion and soil disturbance. The locations for live fascines and live stake rows shall be identified in the field for review and acceptance by the Engineer. The Engineer may require adjustment of fascine locations prior to installation in order to best accomplish the intended functions.

Plant replacement during plant establishment for "PSIPE Live Fascine" will be required for any section void of live shoots for a length of 3 feet or more. Replacement shall consist of installing live stakes, spaced 1 foot apart above the fascine within the area void of live shoots. Live stakes shall be of the same species as the live fascine and shall have a minimum length of 3 feet and a minimum diameter of ¾ inch. The requirements of Section 8-02.3(8) apply to PSIPE Live Fascine.

8-02.3(15)B Brush Mattress

Live brush mattress shall be constructed of live branch cuttings, live poles, jute rope and topsoil. The live cuttings and live poles shall be from the plant species designated in the Plans. Live branch cuttings shall be placed with the cut ends oriented down slope as shown in the Plans. Cuttings shall overlap from side to side and from top to bottom as each layer is constructed. The live branches in each succeeding upper layer shall overlap the adjacent lower layer by a minimum of 6 inches. A maximum of 20 percent of the branches may be dead branches, but the live branches shall be distributed evenly to provide even rooting and growth over the entire area of the brush mattress.

The Contractor shall anchor the live brush mattress to the slope using stakes and jute rope as shown in the Plans. Initially, the stakes shall be installed to protrude above the live brush mattress. The Contractor shall attach the jute rope to the stakes and tighten the rope by tamping the stakes further into the bank, pulling the live brush mattress tight against the soil surface. The Contractor shall cover the live

INFORMATIONAL COPY ONLY - NOT FOR BIDDING

brush mattress with sufficient stockpiled topsoil to ensure good soil contact with the live plant material.

Plant replacement during plant establishment for "PSIPE Live Brush Mattress" will be required for any section void of live shoots for an area of 25 square feet or more. Replacement shall consist of installing live stakes, spaced 3 feet apart in a triangular pattern within the area void of live shoots. Live stakes shall be of the same species as the live brush mattress and shall have a minimum length of 3 feet and a minimum diameter of ¾ inch. The requirements of Section 8-02.3(8) apply to PSIPE Brush Mattress.

8-02.3(15)C Brush Layer

Brush layers shall be constructed of live branch cuttings, randomly mixed, from the plant species listed under the brush layer heading in the Plans. The number of branches required will vary depending on the average branch diameter and layer thickness.

Brush layers shall be placed in a trench dug at a 45 degree incline into the slope or stream bank. Two-thirds to three-fourths of the length of the live branches shall be buried. Soil shall be firmly tamped in place. Succeeding layers shall be spaced as detailed in the Plans. Brush layer placed in stream banks shall be angled downstream.

Brush layers may include plant establishment when designated as PSIPE Brush Layer. Plant replacement for PSIPE Brush Layer will be required for each section void of live shoots for a continuous distance of 3 feet or more. The requirements of Section 8-02.3(8) apply to PSIPE Brush Layer.

8-02.3(16) Roadside Maintenance Under Construction

When the Contract includes the item, Roadside Maintenance Under Construction, this Work includes roadside mowing and ditch maintenance, and noxious weed control outside of planting areas according to Section 8-02.3(3)C.

8-02.3(16)A Roadside Mowing

The Contractor shall mow designated roadside grass areas to the limits designated by the Engineer. Roadside mowing is limited to slopes not steeper than 3(H) to 1(V).

The Contractor shall mow according to the following requirements:

1. Trim around traffic equipment, structures, planting areas, or other features extending above ground preceding or simultaneously with each mowing.

2. Maintain grass between 4 and 12 inches in height.

3. Operate mowing equipment with suitable guards to prevent throwing rocks or debris onto the traveled way or off of the Contracting Agency property. Power driven equipment shall not cause ruts, deformation, and compaction of the vegetated soil.

4. Removing clippings is required on the traveled way, shoulders, walkways, or Structures.

5. Restore soil rutting to a smooth and even grade at the direction of the Engineer.

INFORMATIONAL COPY ONLY - NOT FOR BIDDING

8-02.3(16)B Ditch Maintenance

The Contractor shall maintain drainage for the duration of the Contract according to the following requirements:

1. Maintain flow lines in drainage channels and roadside ditches.

2. Cutting or trimming vegetation within drainage channels to maintain positive flow.

3. Remove dirt and debris from inside of culverts or any drainage area where runoff has allowed accumulations and re-seed for erosion control.

4. Restore channels to previous operational condition.

8-02.4 Measurement

Topsoil, bark or woodchip mulch and soil amendments will be measured by the acre or the square yard along the grade and slope of the area covered immediately after placement. Weed control pre-treatment of topsoil areas, excavation, and stockpiling are included in the bid item "Topsoil Type ___.

Bark or woodchip mulch rings will be measured per each.

Compost will be measured by the acre or the square yard along the grade and slope of the area covered immediately after application.

Seeding, fertilizing, and mulching will be measured by the acre or the square yard by ground slope measurement or through the use of design data.

Seeding and fertilizing by hand will be measured by the square yard. No adjustment in area size will be made for the vegetation free zone around each plant.

Seeded lawn, sod installation, and lawn mowing will be measured along the ground slope and computed in square yards of actual lawn completed, established, and accepted.

Plant selection will be measured per each.

PSIPE __ (Plant Selection Including Plant Establishment) will be measured per each.

Live Pole will be measured per each.

Live Stake Row will be measured by the linear foot along the ground slope line.

The pay quantities for plant materials will be determined by count of the number of satisfactory plants in each category accepted by the Engineer.

Fascine and PSIPE live fascine will be measured by the linear foot along the ground slope line.

Brush mattress and PSIPE live brush mattress will be measured by the surface square yard along the ground slope line.

Brush layer and PSIPE brush layer will be measured by the linear foot along the ground slope line.

INFORMATIONAL COPY ONLY - NOT FOR BIDDING

Water will be measured in accordance with Section 2-07.4. Measurement will be made of only that water hauled in tank trucks or similar equipment.

8-02.5 Payment

Payment will be made for each of the following listed Bid items that are included in the Proposal:

"Project Area Weed and Pest Control" will be paid in accordance with Section 1-09.6. For the purpose of providing a common Proposal for all Bidders, the Contracting Agency entered an amount for "Project Area Weed and Pest Control" in the Proposal to become a part of the total Bid by the Contractor. Payment under this item will be made only when the Work is not already covered by other items.

"Topsoil Type ____", per acre.
The unit Contract price per acre for "Topsoil Type ____" shall be full payment for all costs for the specified Work.

"Fine Compost ", per acre or per square yard.
"Medium Compost", per acre or per square yard.
"Coarse Compost", per acre or per square yard.
The unit Contract price per acre for "Fine Compost", "Medium Compost" or "Coarse Compost" shall be full pay for furnishing and spreading the compost onto the existing soil.

"Soil Amendment", per acre.
The unit Contract price per acre for "Soil Amendment" shall be full pay for furnishing and incorporating the soil amendment into the existing soil.

"Plant Selection ___", per each.
The unit Contract price for "Plant Selection ___", per each shall be full pay for all Work to perform the work as specified within the planting area prior to planting for weed control, planting area preparation and installation of plants with initial watering.

As the plants that do not include plant establishment are obtained, propagated, and grown, partial payments will be made as follows:

Payment of 15 percent of the unit Contract price per each when the plant materials have been contracted, propagated, and are growing under nursery conditions. The Contractor shall provide the Engineer with certification that the plant material has been procured or contracted for delivery to the project for planting within the time limits of the project. The certification shall state the location, quantity, and size of all material.

Payment will be increased to 100 percent of the unit Contract price per each for contracted plant material at the completion of the initial planting.

All partial payments shall be limited to the actual number of healthy vigorous plants that meet the stage requirements, limited to plan quantity. Previous partial payments made for materials rejected or missing will be deducted from future payments due the Contractor.

"PSIPE ___", per each.

INFORMATIONAL COPY ONLY - NOT FOR BIDDING

The unit Contract price for "PSIPE ___", per each, shall be full pay for all Work necessary to perform as specified within the planting area for weed control and planting area preparation, planting, cleanup, and water necessary to complete planting operations as specified to the end of first year plant establishment.

As the plants that include plant establishment are obtained, propagated, and grown, partial payments will be made as follows after inspection by the Engineer:

Payment of 5 percent of the unit Contract price, per each, when the plant materials have been contracted, propagated, and are growing under nursery conditions. The Contractor shall provide the Engineer with certification that the plant material has been procured or contracted for delivery to the project for planting within the time limits of the project. The certification shall state the location, quantity, and size of all material.

Payment will be increased to 15 percent of the unit Contract price, per each, upon completion of the initial weed control and planting area preparation Work.

Payment will be increased to 60 percent of the unit Contract price per each for the contracted plant material in a designated unit area when planted.

Payment will be increased to 70 percent of the unit Contract price per each for contracted plant material at the completion of the initial planting.

Payment will be increased to the appropriate percentage upon reaching the following plant establishment milestones:

June 30th	80 percent
September 30th	90 percent
Completion of first-year plant establishment or after all replacement plants have been installed, whichever is later.	100 percent

Plant establishment milestones are achieved when planting areas meet conditions described in Section 8-02.3(13).

"Seeding, Fertilizing and Mulching", per acre.

"Seeding and Fertilizing", per acre or per square yard.

"Seeding and Fertilizing by Hand", per square yard.

"Second Application of Fertilizer", per acre.

"Seeding and Mulching", per acre.

"Seeded Lawn Installation", per square yard.
"Sod Installation", per square yard.
"Lawn Mowing", per square yard.
The unit Contract price per square yard for "Seeded Lawn Installation" or "Sod Installation" shall be full pay for all costs necessary to prepare the area, plant or sod the lawn, erect barriers, control weeds, and establish lawn areas and for furnishing all labor,

INFORMATIONAL COPY ONLY - NOT FOR BIDDING

tools, equipment, and materials necessary to complete the Work as specified and shall be paid in the following sequence for healthy, vigorous lawn:

Completion of Lawn Planting	60 percent of individual areas
Mid Lawn Establishment (after two mowings)	85 percent of individual areas
Completion of Lawn Establishment (after four mowings)	100 percent of individual areas

"Plant Establishment Year ____" will be paid in accordance with Section 1-09.6.
For the purpose of providing a common Proposal for all Bidders, the Contracting Agency entered an amount for "Plant Establishment - ___ Year" in the Proposal to become a part of the total Bid by the Contractor.

"Live Pole", per each.

"Live Stake Row", per linear foot.

"Bark or Wood Chip Mulch", per acre.

"Bark or Wood Chip Mulch Rings", per each.
The unit Contract price per acre for "Bark or Wood Chip Mulch" shall be full pay for furnishing and spreading the mulch onto the existing soil.

"Fascine" and "PSIPE Live Fascine", per linear foot.
"Brush Mattress" and "PSIPE Live Brush Mattress", per square yard.
"Brush Layer" and "PSIPE Brush Layer", per linear foot.
When PSIPE is included with Fascine, Brush Mattress, or Brush Layer, the payment schedule for PSIPE ____ will apply.

"Roadside Maintenance under Construction" will be paid in accordance with Section 1-09.6.
For the purpose of providing a common Proposal for all Bidders, the Contracting Agency has entered an amount for "Roadside Maintenance Under Construction" in the Proposal to become a part of the total Bid by the Contractor.

"Water", per M Gal.

Section 8-11, Guardrail
April 1, 2019

8-11.3(1)A Erection of Posts
The first sentence of the first paragraph is revised to read:

Posts shall be set to the true line and grade of the Highway after the grade is in place and compaction is completed.

8-11.3(1)C Terminal and Anchor Installation
The first paragraph is revised to read:

INFORMATIONAL COPY ONLY - NOT FOR BIDDING

All excavation and backfilling required for installation of anchors shall be performed in accordance with Section 2-09, except that the costs thereof shall be included in the unit Contract price for the anchor installed.

The first sentence of the second to last paragraph is revised to read:

Assembly and installation of Beam Guardrail Non-flared Terminals for Type 31 guardrail shall be supervised at all times by a manufacturer's representative, or an installer who has been trained and certified by the manufacturer.

The last paragraph is revised to read:

Beam Guardrail Non-flared Terminals for Type 31 guardrail shall meet the crash test and evaluation criteria in the Manual for Assessing Safety Hardware (MASH).

8-11.4 Measurement

The third paragraph is revised to read:

Measurement of beam guardrail _____ terminal will be per each for the completed terminal.

The fourth paragraph is revised to read:

Measurement of beam guardrail Type 31 buried terminal Type 2 will be per linear foot for the completed terminal.

The sixth paragraph is revised to read:

Measurement of beam guardrail anchor Type 10 will be per each for the completed anchor, including the attachment of the anchor to the guardrail.

8-11.5 Payment

The Bid item "Beam Guardrail Anchor Type ___", per each is revised to read "Beam Guardrail Anchor Type 10", per each.

The Bid item "Beam Guardrail Buried Terminal Type 1", per each is deleted from this section.

The Bid item "Beam Guardrail Buried Terminal Type 2", per linear foot and the following paragraph are revised to read:

"Beam Guardrail Type 31 Buried Terminal Type 2", per linear foot.

The unit Contract price per linear foot for "Beam Guardrail Type 31 Buried Terminal Type 2" shall be full payment for all costs to obtain and provide materials and perform the Work as described in Section 8-11.3(1)C.

Section 8-22, Pavement Marking
January 7, 2019

8-22.3(2) Preparation of Roadway Surfaces

The second paragraph is revised to read:

Remove all other contaminants from pavement surfaces that may adversely affect the installation of new pavement marking.

INFORMATIONAL COPY ONLY - NOT FOR BIDDING

8-22.3(3)F Application Thickness

The second to last sentence of the last paragraph is revised to read:

After grinding, clean the groove.

9-00.AP9

Section 9-00, Definitions and Tests
January 7, 2019

9-00.4 Sieves for Testing Purposes

This section is revised to read:

Test sieves shall be made of either: (1) woven wire cloth conforming to ASTM E11, or (2) square-hole, perforated plates conforming to ASTM E323.

9-00.7 Galvanized Hardware, AASHTO M 232

The first sentence is revised to read:

An acceptable alternate to hot-dip galvanizing in accordance with AASHTO M 232 will be zinc coatings mechanically deposited in accordance with ASTM B695, providing the minimum thickness of zinc coating is not less than that specified in AASHTO M 232, and the process will not produce hydrogen embrittlement in the base metal.

9-02.AP9

Section 9-02, Bituminous Materials
January 7, 2019

9-02.1 Asphalt Material, General

The second paragraph is revised to read:

The Asphalt Supplier of Performance Graded (PG) asphalt binder and emulsified asphalt shall have a Quality Control Plan (QCP) in accordance with WSDOT QC 2 "Standard Practice for Asphalt Suppliers That Certify Performance Graded and Emulsified Asphalts". The Asphalt Supplier's QCP shall be submitted and receive the acceptance of the WSDOT State Materials Laboratory. Once accepted, any change to the QCP will require a new QCP to be submitted for acceptance. The Asphalt Supplier of PG asphalt binder and emulsified asphalt shall certify through the Bill of Lading that the PG asphalt binder or emulsified asphalt meets the Specification requirements of the Contract.

Section 9-05, Drainage Structures and Culverts
January 7, 2019

9-05.3(1)A End Design and Joints

The second sentence of the first paragraph is revised to read:

The joints and gasket material shall meet the requirements of ASTM C990.

INFORMATIONAL COPY ONLY - NOT FOR BIDDING

9-05.3(1)C Age at Shipment

The last sentence of the first paragraph is revised to read:

> Unless it is tested and accepted at an earlier age, it shall not be considered ready for shipment sooner than 28 days after manufacture when made with Type II portland cement or blended hydraulic cement, nor sooner than 7 days when made with Type III portland cement.

9-05.7(3) Concrete Storm Sewer Pipe Joints

The second sentence is revised to read:

> The joints and gasket material shall meet the requirements of ASTM C990.

9-05.7(4)A Hydrostatic Pressure on Pipes in Straight Alignment

The first sentence is revised to read:

> Hydrostatic pressure tests on pipes in straight alignment shall be made in accordance with the procedure outlined in Section 10 of ASTM C990, except that they shall be performed on an assembly consisting of not less than three nor more than five pipe sections selected from stock by the Engineer and assembled in accordance with standard installation instructions issued by the manufacturer.

9-05.24(1) Polypropylene Culvert Pipe and Storm Sewer Pipe

This section is revised to read:

> Polypropylene culvert and storm sewer pipe shall conform to the following requirements:
>
> 1. For dual wall pipe sizes up to 60 inches: ASTM F2881 or AASHTO M 330, Type S or Type D.
> 2. For double or triple wall pipe sizes up to 60 inches: ASTM F2764.
> 3. Fittings shall be factory welded, injection molded, or PVC.

9-05.24(2) Polypropylene Sanitary Sewer Pipe

This section is revised to read:

> Polypropylene sanitary sewer pipe shall conform to the following requirements:
>
> 1. For pipe sizes up to 60 inches: ASTM F2764.
> 2. Fittings shall be factory welded, injection molded, or PVC.

Section 9-14, Erosion Control and Roadside Planting
August 6, 2018

9-14.4(2) Hydraulically Applied Erosion Control Products (HECPs)

In Table 1, the last four rows are deleted.

9-14.4(2)A Long-Term Mulch

The first paragraph is supplemented with the following:

INFORMATIONAL COPY ONLY - NOT FOR BIDDING

Products containing cellulose fiber produced from paper or paper components will not be accepted.

Table 2 is supplemented with the following new rows:

Water Holding Capacity	ASTM D 7367	800 percent minimum
Organic Matter Content	AASHTO T 267	90 percent minimum
Seed Germination Enhancement	ASTM D 7322	Long Term 420 percent minimum

9-14.4(2)B Moderate-Term Mulch

This section is revised to read:

Within 48 hours of application, the Moderate-Term Mulch shall bond with the soil surface to create a continuous, absorbent, flexible, erosion-resistant blanket. Moderate-Term Mulch shall effectively perform the intended erosion control function in accordance with Section 8-01.3(1) for a minimum of 3 months, or until temporary vegetation has been established, whichever comes first.

Moderate-Term Mulch shall not be used in conjunction with permanent seeding.

9-14.4(2)C Short-Term Mulch

This section is revised to read:

Short-Term Mulch shall effectively perform the intended erosion control function in accordance with Section 8-01.3(1) for a minimum of 2 months, or until temporary vegetation has been established, whichever comes first. Short-Term Mulch shall not be used in conjunction with permanent seeding.

Section 9-16, Fence and Guardrail
August 6, 2018

9-16.3(1) Rail Element

The last sentence of the first paragraph is revised to read:

All rail elements shall be formed from 12-gage steel except for thrie beam reducer sections, reduced length thrie beam rail elements, thrie beams used for bridge rail retrofits, and Design F end sections, which shall be formed from 10-gage steel.

9-16.3(5) Anchors

The last paragraph is revised to read:

Cement grout shall conform to Section 9-20.3(4) and consist of one part portland cement or blended hydraulic cement and two parts sand.

Section 9-34, Pavement Marking Material
January 7, 2019

9-34.2(2) Color

The first sentence is revised to read:

INFORMATIONAL COPY ONLY - NOT FOR BIDDING

Paint draw-downs shall be prepared according to ASTM D823.

Each reference to "Federal Standard 595" is revised to read "SAE AMS Standard 595".

9-34.2(3) Prohibited Materials

This section is revised to read:

Traffic paint shall not contain mercury, lead, chromium, diarylide pigments, toluene, chlorinated solvents, hydrolysable chlorine derivatives, ethylene-based glycol ethers and their acetates, nor any other EPA hazardous waste material over the regulatory levels in accordance with CFR 40 Part 261.24.

9-34.2(5) Low VOC Waterborne Paint

The heading "Standard Waterborne Paint" is supplemented with "Type 1 and 2".

The heading "High-Build Waterborne Paint" is supplemented with "Type 4".

The heading "Cold Weather Waterborne Paint" is supplemented with "Type 5".

In the row beginning with "° @90°F", each minimum value is revised to read "60".

In the row beginning with "Fineness of Grind, (Hegman Scale)", each minimum value is revised to read "3".

The last four rows are replaced with the following:

Vehicle Composition	ASTM D 2621	100% acrylic emulsion	100% cross-linking acrylic[4]	100% acrylic emulsion
Freeze-Thaw Stability, KU	ASTM D 2243 and D 562	@ 5 cycles show no coagulation or change in viscosity greater than ± 10 KU	@ 5 cycles show no coagulation or change in viscosity greater than ± 10 KU	@ 3 cycles show no coagulation or change in viscosity greater than ± 10 KU
Heat Stability	ASTM D 562[2]	± 10 KU from the initial viscosity	± 10 KU from the initial viscosity	± 10 KU from the initial Viscosity
Low Temperature Film Formation	ASTM D 2805[3]	No Cracks*		No Cracks
Cold Flexibility[5]	ASTM D522	Pass at 0.5 in mandrel*		
Test Deck Durability[6]	ASTM D913	≥70% paint retention in wheel track*		
Mud Cracking	(See note 7)	No Cracks	No Cracks	

After the preceding Amendments are applied, the following new column is inserted after the "Standard Waterborne Paint Type 1 and 2" column:

Semi-Durable Waterborne Paint Type 3			
White		Yellow	
Min.	Max.	Min.	Max.
Within ± 0.3 of qualification sample			
80	95	80	95
60		60	
77		77	
	65		65

INFORMATIONAL COPY ONLY - NOT FOR BIDDING

43		43	
	1.25		1.25
3		3	
0.98		0.96	
88		50	
100°		100°	
9.5		9.5	
	10		10
100% acrylic emulsion			
@ 5 cycles show no coagulation or change in viscosity greater than ± 10 KU			
± 10 KU from the initial viscosity			
No Cracks			
Pass at 0.25 in mandrel			
≥70% paint retention in wheel track			
No Cracks			

The footnotes are supplemented with the following:

[4]Cross-linking acrylic shall meet the requirements of federal specification TT-P-1952F Section 3.1.1.

[5]Cold Flexibility: The paint shall be applied to an aluminum panel at a wet film thickness of 15 mils and allowed to dry under ambient conditions (50±10% RH and 72±5 ˚F) for 24 hours. A cylindrical mandrel apparatus (in accordance with ASTM D522 method B) shall be put in a 40°F refrigerator when the paint is drawn down. After 24 hours, the aluminum panel with dry paint shall be put in the 40°F refrigerator with the mandrel apparatus for 2 hours. After 2 hours, the panel and test apparatus shall be removed and immediately tested to according to ASTM D522 to evaluate cold flexibility. Paint must show no evidence of cracking, chipping or flaking when bent 180 degrees over a mandrel bar of specified diameter.

[6]NTPEP test deck, or a test deck conforming to ASTM D713, shall be conducted for a minimum of six months with the following additional requirements: it shall be applied at 15 wet mils to a test deck that is located at 40N latitude or higher with at least 10,000 ADT and which was applied during the months of September through November.

[7]Paint is applied to an approximately 4"x12" aluminum panel using a drawdown bar with a 50 mil gap. The coated panel is allowed to dry under ambient conditions (50±10% RH and 72±5 ˚F) for 24 hours. Visual evaluation of the dry film shall reveal no cracks.

9-34.3 Plastic

In the first sentence of the last paragraph, "Federal Standard 595" is revised to read "SAE AMS Standard 595".

9-34.3(2) Type B – Pre-Formed Fused Thermoplastic

In the last two paragraphs, each reference to "Federal Standard 595" is revised to read "SAE AMS Standard 595".

9-34.3(4) Type D – Liquid Cold Applied Methyl Methacrylate

The Test Method value for **Adhesion to PCC or HMA, psi** is revised to read "ASTM D4541[1]".

9-34.4 Glass Beads for Pavement Marking Materials

In the Test Method column of the table titled Metal Concentration Limits, "EPA 3052 SW-846 6010C" is revised to read "EPA 3052 SW-846 6010D".

INFORMATIONAL COPY ONLY NOT FOR BIDDING

9-34.5(1) Temporary Pavement Marking Tape – Short Duration

This section, including title, is revised to read:

> **9-34.5(1) Temporary Pavement Marking Tape – Short Duration (Removable)**
> Temporary pavement marking tape for short duration (usage is for up to two months) shall conform to ASTM D4592 Type I except that black tape, black mask tape and the black portion of the contrast removable tape, shall be non-reflective.

9-34.5(2) Temporary Pavement Marking Tape – Long Duration

This section's title is revised to read:

> **Temporary Pavement Marking Tape – Long Duration (Non-Removable)**

The first sentence is revised to read:

> Temporary pavement marking tape for long duration (usage is for greater than two months and less than one year) shall conform to ASTM D4592 Type II.

ASTM E2176 is deleted from the second sentence.

9-34.7(1) Requirements

The first paragraph is revised to read:

> Field performance evaluation is required for low VOC solvent-based paint per Section 9-34.2(4), Type A – liquid hot applied thermoplastic per Section 9-34.3(1), Type B – preformed fused thermoplastic per Section 9-34.3(2), Type C – cold applied preformed tape per Section 9-34.3(3), and Type D – liquid applied methyl methacrylate per Section 9-34.3(4).

The last paragraph is deleted.

9-34.7(1)C Auto No-Track Time

The first paragraph is revised to read:

> Auto No-Track Time will only be required for low VOC solvent-based paint in accordance with Section 9-34.2(4).

The second and third sentences of the second paragraph are deleted.

INFORMATIONAL COPY ONLY - NOT FOR BIDDING

1
2
3
4
5
6
7
8
9

INFORMATIONAL COPY ONLY - NOT FOR BIDDING

SPECIAL PROVISIONS

The following Special Provisions are made a part of this contract and supersede any conflicting provisions of the 2014 Standard Specifications for Road, Bridge, and Municipal Construction, and the foregoing Amendments to the Standard Specifications.

Several types of Special Provisions are included in this contract; General, Region, Bridges and Structures, and Project Specific. Special Provisions types are differentiated as follows:

(date)	General Special Provision
(******)	Notes a revision to a General Special Provision and also notes a Project Specific Special Provision.
(Regions[1] date)	Region Special Provision
(BSP date)	Bridges and Structures Special Provision

General Special Provisions are similar to Standard Specifications in that they typically apply to many projects, usually in more than one Region. Usually, the only difference from one project to another is the inclusion of variable project data, inserted as a "fill-in".

Region Special Provisions are commonly applicable within the designated Region. Region
designations are as follows:

Regions[1]	
ER	Eastern Region
NCR	North Central Region
NWR	Northwest Region
OR	Olympic Region
SCR	South Central Region
SWR	Southwest Region
WSF	Washington State Ferries Division

Bridges and Structures Special Provisions are similar to Standard Specifications in that they typically apply to many projects, usually in more than one Region. Usually, the only difference from one project to another is the inclusion of variable project data, inserted as a "fill-in".

Project Specific Special Provisions normally appear only in the contract for which they were developed.

DIVISION 1 GENERAL REQUIREMENTS

DESCRIPTION OF WORK

(******)
This contract provides for the reconstruction of 4.38 miles of two lane county road in Grant County, WA, and includes roadway excavation, embankment compaction, crushed surfacing base course, crushed surfacing topo course, guardrail, seeding and fertilizing, and other work all in accordance with the attached Contract Plans, these Contract Provisions and the Standard Specifications.

DEFINITIONS AND TERMS

INFORMATIONAL COPY ONLY - NOT FOR BIDDING

1-01.3 Definitions

(January 4, 2016 APWA GSP)

Delete the heading **Completion Dates** and the three paragraphs that follow it, and replace them with the following:

Dates

Bid Opening Date
The date on which the Contracting Agency publicly opens and reads the Bids.

Award Date
The date of the formal decision of the Contracting Agency to accept the lowest responsible and responsive Bidder for the Work.

Contract Execution Date
The date the Contracting Agency officially binds the Agency to the Contract.

Notice to Proceed Date
The date stated in the Notice to Proceed on which the Contract time begins.

Substantial Completion Date
The day the Engineer determines the Contracting Agency has full and unrestricted use and benefit of the facilities, both from the operational and safety standpoint, any remaining traffic disruptions will be rare and brief, and only minor incidental work, replacement of temporary substitute facilities, plant establishment periods, or correction or repair remains for the Physical Completion of the total Contract.

Physical Completion Date
The day all of the Work is physically completed on the project. All documentation required by the Contract and required by law does not necessarily need to be furnished by the Contractor by this date.

Completion Date
The day all the Work specified in the Contract is completed and all the obligations of the Contractor under the contract are fulfilled by the Contractor. All documentation required by the Contract and required by law must be furnished by the Contractor before establishment of this date.

Final Acceptance Date
The date on which the Contracting Agency accepts the Work as complete.

Supplement this Section with the following:

All references in the Standard Specifications, Amendments, or WSDOT General Special Provisions to the terms "Department of Transportation", "Washington State Transportation Commission", "Commission", "Secretary of Transportation", "Secretary", "Headquarters", and "State Treasurer" shall be revised to read "Contracting Agency".

All references to the terms "State" or "state" shall be revised to read "Contracting Agency" unless the reference is to an administrative agency of the State of Washington, a State statute or regulation, or the context reasonably indicates otherwise.

All references to "State Materials Laboratory" shall be revised to read "Contracting Agency designated location".

All references to "final contract voucher certification" shall be interpreted to mean the Contracting Agency form(s) by which final payment is authorized, and final completion and acceptance granted.

INFORMATIONAL COPY ONLY - NOT FOR BIDDING

Additive

A supplemental unit of work or group of bid items, identified separately in the Bid Proposal, which may, at the discretion of the Contracting Agency, be awarded in addition to the base bid.

Alternate

One of two or more units of work or groups of bid items, identified separately in the Bid Proposal, from which the Contracting Agency may make a choice between different methods or material of construction for performing the same work.

Business Day

A business day is any day from Monday through Friday except holidays as listed in Section 1-08.5.

Contract Bond

The definition in the Standard Specifications for "Contract Bond" applies to whatever bond form(s) are required by the Contract Documents, which may be a combination of a Payment Bond and a Performance Bond.

Contract Documents

See definition for "Contract".

Contract Time

The period of time established by the terms and conditions of the Contract within which the Work must be physically completed.

Notice of Award

The written notice from the Contracting Agency to the successful Bidder signifying the Contracting Agency's acceptance of the Bid Proposal.

Notice to Proceed

The written notice from the Contracting Agency or Engineer to the Contractor authorizing and directing the Contractor to proceed with the Work and establishing the date on which the Contract time begins.

Traffic

Both vehicular and non-vehicular traffic, such as pedestrians, bicyclists, wheelchairs, and equestrian traffic.

BID PROCEDURES AND CONDITIONS

1-02.1 Prequalification of Bidders

Delete this section and replace it with the following:

1-02.1 Qualifications of Bidder

(January 24, 2011 APWA GSP)

INFORMATIONAL COPY ONLY - NOT FOR BIDDING

Before award of a public works contract, a bidder must meet at least the minimum qualifications of RCW 39.04.350(1) to be considered a responsible bidder and qualified to be awarded a public works project.

1-02.2 Plans and Specifications
(June 27, 2011 APWA GSP)

Delete this section and replace it with the following:

Information as to where Bid Documents can be obtained or reviewed can be found in the Call for Bids (Advertisement for Bids) for the work.

After award of the contract, plans and specifications will be issued to the Contractor at no cost as detailed below:

To Prime Contractor	No. of Sets	Basis of Distribution
Reduced plans (11" x 17")	4	Furnished automatically upon award.
Contract Provisions	4	Furnished automatically upon award.
Large plans (e.g., 22" x 34")	0	Furnished only upon request.

Additional plans and Contract Provisions may be obtained by the Contractor from the source stated in the Call for Bids, at the Contractor's own expense.

1-02.5 Proposal Forms
(July 31, 2017 APWA GSP)

Delete this section and replace it with the following:

The Proposal Form will identify the project and its location and describe the work. It will also list estimated quantities, units of measurement, the items of work, and the materials to be furnished at the unit bid prices. The bidder shall complete spaces on the proposal form that call for, but are not limited to, unit prices; extensions; summations; the total bid amount; signatures; date; and, where applicable, retail sales taxes and acknowledgment of addenda; the bidder's name, address, telephone number, and signature; the bidder's UDBE/DBE/M/WBE commitment, if applicable; a State of Washington Contractor's Registration Number; and a Business License Number, if applicable. Bids shall be completed by typing or shall be printed in ink by hand, preferably in black ink. The required certifications are included as part of the Proposal Form.

The Contracting Agency reserves the right to arrange the proposal forms with alternates and additives, if such be to the advantage of the Contracting Agency. The bidder shall bid on all alternates and additives set forth in the Proposal Form unless otherwise specified.

1-02.6 Preparation of Proposal
(June 27, 2011 APWA GSP)

INFORMATIONAL COPY ONLY - NOT FOR BIDDING

Supplement the second paragraph with the following:

4. If a minimum bid amount has been established for any item, the unit or lump sum price must equal or exceed the minimum amount stated.

5. Any correction to a bid made by interlineation, alteration, or erasure, shall be initialed by the signer of the bid.

Delete the last paragraph, and replace it with the following:

The Bidder shall make no stipulation on the Bid Form, nor qualify the bid in any manner.

A bid by a corporation shall be executed in the corporate name, by the president or a vice president (or other corporate officer accompanied by evidence of authority to sign).

A bid by a partnership shall be executed in the partnership name, and signed by a partner. A copy of the partnership agreement shall be submitted with the Bid Form if any D/M/WBE requirements are to be satisfied through such an agreement.
A bid by a joint venture shall be executed in the joint venture name and signed by a member of the joint venture. A copy of the joint venture agreement shall be submitted with the Bid Form if any D/W/MBE requirements are to be satisfied through such an agreement.

(August 4, 2004)

The fifth and sixth paragraphs of Section 1-02.6 are deleted.

1-02.7 Bid Deposit
(March 8, 2013 APWA GSP)

Supplement this section with the following:

Bid bonds shall contain the following:

1. Contracting Agency-assigned number for the project;
2. Name of the project;
3. The Contracting Agency named as obligee;
4. The amount of the bid bond stated either as a dollar figure or as a percentage which represents five percent of the maximum bid amount that could be awarded;
5. Signature of the bidder's officer empowered to sign official statements. The signature of the person authorized to submit the bid should agree with the signature on the bond, and the title of the person must accompany the said signature;
6. The signature of the surety's officer empowered to sign the bond and the power of attorney.

If so stated in the Contract Provisions, bidder must use the bond form included in the Contract Provisions.

If so stated in the Contract Provisions, cash will not be accepted for a bid deposit.

INFORMATIONAL COPY ONLY - NOT FOR BIDDING

1-02.9 Delivery of Proposal
(July 31, 2017 APWA GSP, Option A)

Delete this section and replace it with the following:

Each Proposal shall be submitted in a sealed envelope, with the Project Name and Project Number as stated in the Call for Bids clearly marked on the outside of the envelope, or as otherwise required in the Bid Documents, to ensure proper handling and delivery.

If the project has FHWA funding and requires UDBE Written Confirmation Document(s) or Good Faith Effort (GFE) Documentation, then to be considered responsive, the Bidder shall submit Written Confirmation Documentation from each UDBE firm listed on the Bidder's completed UDBE Utilization Certification, form 272-056U, as required by Section 1-02.6. The UDBE Written Confirmation Document(s) and/or GFE (if any) shall be received either with the Bid Proposal or as a Supplement to the Bid. The document(s) shall be received **no later than 24 hours** (not including Saturdays, Sundays and Holidays) after the time for delivery of the Bid Proposal.

The Bidder shall submit to the Contracting Agency a signed "Certification of Compliance with Wage Payment Statutes" document where the Bidder under penalty of perjury verifies that the Bidder is in compliance with responsible bidder criteria in RCW 39.04.350 subsection (1) (g), as required per Section 1-02.14. The "Certification of Compliance with Wage Payment Statutes" document shall be received either with the Bid Proposal or **no later than 24 hours** (not including Saturdays, Sundays and Holidays) after the time for delivery of the Bid Proposal.

If submitted after the Bid Proposal is due, the document(s) must be submitted in a sealed envelope labeled the same as for the Proposal, with "Supplemental Information" added. All other information required to be submitted with the Bid Proposal must be submitted with the Bid Proposal itself, at the time stated in the Call for Bids.

The Contracting Agency will not open or consider any Bid Proposal that is received after the time specified in the Call for Bids for receipt of Bid Proposals, or received in a location other than that specified in the Call for Bids. The Contracting Agency will not open or consider any "Supplemental Information" (UDBE confirmations, GFE documentation, or Certification of Compliance with Wage Payment Statutes) that is received after the time specified above, or received in a location other than that specified in the Call for Bids.

Public Opening Of Proposals
Section 1-02.12 is supplemented with the following:

(******)
Date Of Opening Bids
Sealed bids are to be received at the following location prior to the time specified:

The Office of the Board of County Commissioners, Grant County Courthouse, Room 207, 35 C St. NW, P.O. Box 37, Ephrata, WA 98823

The bid opening date for this project is **May 21, 2019**. Bids received will be publicly opened and read after **1:30 P.M.** on this date.

Irregular Proposals

INFORMATIONAL COPY ONLY NOT FOR BIDDING

1-02.13 Irregular Proposals
(June 20, 2017 APWA GSP)

Delete this section and replace it with the following:

1. A Proposal will be considered irregular and will be rejected if:

a. The Bidder is not prequalified when so required;

b. The authorized Proposal form furnished by the Contracting Agency is not used or is altered;

c. The completed Proposal form contains any unauthorized additions, deletions, alternate Bids, or conditions;

d. The Bidder adds provisions reserving the right to reject or accept the award, or enter into the Contract;

e. A price per unit cannot be determined from the Bid Proposal;

f. The Proposal form is not properly executed;

g. The Bidder fails to submit or properly complete a Subcontractor list, if applicable, as required in Section 1-02.6;

h. The Bidder fails to submit or properly complete an Underutilized Disadvantaged Business Enterprise Certification, if applicable, as required in Section 1-02.6;

i. The Bidder fails to submit written confirmation from each UDBE firm listed on the Bidder's completed UDBE Utilization Certification that they are in agreement with the bidder's UDBE participation commitment, if applicable, as required in Section 1-02.6, or if the written confirmation that is submitted fails to meet the requirements of the Special Provisions;

j The Bidder fails to submit UDBE Good Faith Effort documentation, if applicable, as required in Section 1-02.6, or if the documentation that is submitted fails to demonstrate that a Good Faith Effort to meet the Condition of Award was made;

k. The Bid Proposal does not constitute a definite and unqualified offer to meet the material terms of the Bid invitation; or

l. More than one Proposal is submitted for the same project from a Bidder under the same or different names.

2. A Proposal may be considered irregular and may be rejected if:

a. The Proposal does not include a unit price for every Bid item;

b. Any of the unit prices are excessively unbalanced (either above or below the amount of a reasonable Bid) to the potential detriment of the Contracting Agency;

c. Receipt of Addenda is not acknowledged;

d. A member of a joint venture or partnership and the joint venture or partnership submit Proposals for the same project (in such an instance, both Bids may be rejected); or

e. If Proposal form entries are not made in ink.

INFORMATIONAL COPY ONLY - NOT FOR BIDDING

AWARD AND EXECUTION OF CONTRACT

1-03.3 Execution of Contract
(October 1, 2005 APWA GSP)

Revise this section to read:

Copies of the Contract Provisions, including the unsigned Form of Contract, will be available for signature by the successful bidder on the first business day following award. The number of copies to be executed by the Contractor will be determined by the Contracting Agency.

Within **10 (ten) calendar days** after the award date, the successful bidder shall return the signed Contracting Agency-prepared contract, an insurance certification as required by Section 1-07.18, and a satisfactory bond as required by law and Section 1-03.4. Before execution of the contract by the Contracting Agency, the successful bidder shall provide any pre-award information the Contracting Agency may require under Section 1-02.15.

Until the Contracting Agency executes a contract, no proposal shall bind the Contracting Agency nor shall any work begin within the project limits or within Contracting Agency-furnished sites. The Contractor shall bear all risks for any work begun outside such areas and for any materials ordered before the contract is executed by the Contracting Agency.

If the bidder experiences circumstances beyond their control that prevents return of the contract documents within the calendar days after the award date stated above, the Contracting Agency may grant up to a maximum of 5 (five) additional calendar days for return of the documents, provided the Contracting Agency deems the circumstances warrant it.

1-03.4 Contract Bond
(December 8, 2014 APWA GSP)

Revise the first paragraph to read:

The successful bidder shall provide executed payment and performance bond(s) for the full contract amount. The bond may be a combined payment and performance bond; or be separate payment and performance bonds. In the case of separate payment and performance bonds, each shall be for the full contract amount. The bond(s) shall:

1. Be on Contracting Agency-furnished form(s);
2. Be signed by an approved surety (or sureties) that:
   a. Is registered with the Washington State Insurance Commissioner, and
   b. Appears on the current Authorized Insurance List in the State of Washington published by the Office of the Insurance Commissioner,
3. Guarantee that the Contractor will perform and comply with all obligations, duties, and conditions under the Contract, including but not limited to the duty and obligation to indemnify, defend, and protect the Contracting Agency against all losses and claims related directly or indirectly from any failure:
   a. Of the Contractor (or any of the employees, subcontractors, or lower tier subcontractors of the Contractor) to faithfully perform and comply with all contract obligations, conditions, and duties, or
   b. Of the Contractor (or the subcontractors or lower tier subcontractors of the Contractor) to pay all laborers, mechanics, subcontractors, lower tier subcontractors, material person, or any other person who provides supplies or provisions for carrying out the work;
4. Be conditioned upon the payment of taxes, increases, and penalties incurred on the project under titles 50, 51, and 82 RCW; and
5. Be accompanied by a power of attorney for the Surety's officer empowered to sign the bond; and
6. Be signed by an officer of the Contractor empowered to sign official statements (sole proprietor or partner). If the Contractor is a corporation, the bond(s) must be signed by

INFORMATIONAL COPY ONLY - NOT FOR BIDDING

the president or vice president, unless accompanied by written proof of the authority of the individual signing the bond(s) to bind the corporation (i.e., corporate resolution, power of attorney, or a letter to such effect signed by the president or vice president).

SCOPE OF THE WORK

1-04.2 Coordination of Contract Documents, Plans, Special Provisions, Specifications, and Addenda

(March 13, 2012 APWA GSP)

Revise the second paragraph to read:

Any inconsistency in the parts of the contract shall be resolved by following this order of precedence (e.g., 1 presiding over 2, 2 over 3, 3 over 4, and so forth):

1. Addenda,
2. Proposal Form,
3. Special Provisions,
4. Contract Plans,
5. Amendments to the Standard Specifications,
6. Standard Specifications,
7. Contracting Agency's Standard Plans or Details (if any), and
8. WSDOT Standard Plans for Road, Bridge, and Municipal Construction.

Control of Work

1-05.7 Removal of Defective and Unauthorized Work

(October 1, 2005 APWA GSP)

Supplement this section with the following:

If the Contractor fails to remedy defective or unauthorized work within the time specified in a written notice from the Engineer, or fails to perform any part of the work required by the Contract Documents, the Engineer may correct and remedy such work as may be identified in the written notice, with Contracting Agency forces or by such other means as the Contracting Agency may deem necessary.

If the Contractor fails to comply with a written order to remedy what the Engineer determines to be an emergency situation, the Engineer may have the defective and unauthorized work corrected immediately, have the rejected work removed and replaced, or have work the Contractor refuses to perform completed by using Contracting Agency or other forces. An emergency situation is any situation when, in the opinion of the Engineer, a delay in its remedy could be potentially unsafe, or might cause serious risk of loss or damage to the public.

Direct or indirect costs incurred by the Contracting Agency attributable to correcting and remedying defective or unauthorized work, or work the Contractor failed or refused to perform, shall be paid by the Contractor. Payment will be deducted by the Engineer from monies due, or to become due, the Contractor. Such direct and indirect costs shall include in particular, but without limitation, compensation for additional professional services required, and costs for repair and replacement of work of others destroyed or damaged by correction, removal, or replacement of the Contractor's unauthorized work.

INFORMATIONAL COPY ONLY - NOT FOR BIDDING

No adjustment in contract time or compensation will be allowed because of the delay in the performance of the work attributable to the exercise of the Contracting Agency's rights provided by this Section.

The rights exercised under the provisions of this section shall not diminish the Contracting Agency's right to pursue any other avenue for additional remedy or damages with respect to the Contractor's failure to perform the work as required.

1-05.11 Final Inspection

Delete this section and replace it with the following:

1-05.11 Final Inspections and Operational Testing

(October 1, 2005 APWA GSP)

1-05.11(1) Substantial Completion Date

When the Contractor considers the work to be substantially complete, the Contractor shall so notify the Engineer and request the Engineer establish the Substantial Completion Date. The Contractor's request shall list the specific items of work that remain to be completed in order to reach physical completion. The Engineer will schedule an inspection of the work with the Contractor to determine the status of completion. The Engineer may also establish the Substantial Completion Date unilaterally.

If, after this inspection, the Engineer concurs with the Contractor that the work is substantially complete and ready for its intended use, the Engineer, by written notice to the Contractor, will set the Substantial Completion Date. If, after this inspection the Engineer does not consider the work substantially complete and ready for its intended use, the Engineer will, by written notice, so notify the Contractor giving the reasons therefor.

Upon receipt of written notice concurring in or denying substantial completion, whichever is applicable, the Contractor shall pursue vigorously, diligently and without unauthorized interruption, the work necessary to reach Substantial and Physical Completion. The Contractor shall provide the Engineer with a revised schedule indicating when the Contractor expects to reach substantial and physical completion of the work.

The above process shall be repeated until the Engineer establishes the Substantial Completion Date and the Contractor considers the work physically complete and ready for final inspection.

1-05.11(2) Final Inspection and Physical Completion Date

When the Contractor considers the work physically complete and ready for final inspection, the Contractor by written notice, shall request the Engineer to schedule a final inspection. The Engineer will set a date for final inspection. The Engineer and the Contractor will then make a final inspection and the Engineer will notify the Contractor in writing of all particulars in which the final inspection reveals the work incomplete or unacceptable. The Contractor shall immediately take such corrective measures as are necessary to remedy the listed deficiencies. Corrective work shall be pursued vigorously, diligently, and without interruption until physical completion of the listed deficiencies. This process will continue until the Engineer is satisfied the listed deficiencies have been corrected.

If action to correct the listed deficiencies is not initiated within 7 days after receipt of the written notice listing the deficiencies, the Engineer may, upon written notice to the

INFORMATIONAL COPY ONLY - NOT FOR BIDDING

Contractor, take whatever steps are necessary to correct those deficiencies pursuant to Section 1-05.7.
The Contractor will not be allowed an extension of contract time because of a delay in the performance of the work attributable to the exercise of the Engineer's right hereunder.

Upon correction of all deficiencies, the Engineer will notify the Contractor and the Contracting Agency, in writing, of the date upon which the work was considered physically complete. That date shall constitute the Physical Completion Date of the contract, but shall not imply acceptance of the work or that all the obligations of the Contractor under the contract have been fulfilled.

1-05.11(3) Operational Testing

It is the intent of the Contracting Agency to have at the Physical Completion Date a complete and operable system. Therefore when the work involves the installation of machinery or other mechanical equipment; street lighting, electrical distribution or signal systems; irrigation systems; buildings; or other similar work it may be desirable for the Engineer to have the Contractor operate and test the work for a period of time after final inspection but prior to the physical completion date. Whenever items of work are listed in the Contract Provisions for operational testing they shall be fully tested under operating conditions for the time period specified to ensure their acceptability prior to the Physical Completion Date. During and following the test period, the Contractor shall correct any items of workmanship, materials, or equipment which prove faulty, or that are not in first class operating condition. Equipment, electrical controls, meters, or other devices and equipment to be tested during this period shall be tested under the observation of the Engineer, so that the Engineer may determine their suitability for the purpose for which they were installed. The Physical Completion Date cannot be established until testing and corrections have been completed to the satisfaction of the Engineer.

The costs for power, gas, labor, material, supplies, and everything else needed to successfully complete operational testing, shall be included in the unit contract prices related to the system being tested, unless specifically set forth otherwise in the proposal.

Operational and test periods, when required by the Engineer, shall not affect a manufacturer's guaranties or warranties furnished under the terms of the contract.

Superintendents, Labor and Equipment of Contractor
Revise the seventh paragraph of Section 1-05.13 to read:

(******)
Whenever the Contracting Agency evaluates the Contractor's <u>qualifications pursuant to Section 1-02.1</u> and 1-02.14, it will take these <u>performance</u> reports into account.

Cooperation With Other Contractors
Section 1-05.14 is supplemented with the following:

(March 13, 1995)
Other Contracts Or Other Work
It is anticipated that the following work adjacent to or within the limits of this project will be performed by others during the course of this project and will require coordination of the work:

INFORMATIONAL COPY ONLY - NOT FOR BIDDING

1. Utility relocations and/or normal maintenance work by telephone and power companies.
2. Normal maintenance work by Grant County Road crews.
3. Normal maintenance work by irrigation district crews.

1-05.15 Method of Serving Notices
(March 25, 2009 APWA GSP)

Revise the second paragraph to read:

All correspondence from the Contractor shall be directed to the Project Engineer. All correspondence from the Contractor constituting any notification, notice of protest, notice of dispute, or other correspondence constituting notification required to be furnished under the Contract, must be in paper format, hand delivered or sent via mail delivery service to the Project Engineer's office. Electronic copies such as e-mails or electronically delivered copies of correspondence will not constitute such notice and will not comply with the requirements of the Contract.

Add the following new section:

1-05.16 Water and Power
(October 1, 2005 APWA GSP)

The Contractor shall make necessary arrangements, and shall bear the costs for power and water necessary for the performance of the work, unless the contract includes power and water as a pay item.

Add the following new section:

1-05.17 Oral Agreements
(October 1, 2005 AWPA GSP)

No oral agreement or conversation with any officer, agent, or employee of the Contracting Agency, either before or after execution of the contract, shall affect or modify any of the terms or obligations contained in any of the documents comprising the contract. Such oral agreement or conversation shall be considered as unofficial information and in no way binding upon the Contracting Agency, unless subsequently put in writing and signed by the Contracting Agency.

LEGAL RELATIONS AND RESPONSIBILITIES TO THE PUBLIC

1-07.1 Laws to be Observed
(October 1, 2005 APWA GSP)

Supplement this section with the following:

In cases of conflict between different safety regulations, the more stringent regulation shall apply.

INFORMATIONAL COPY ONLY - NOT FOR BIDDING

The Washington State Department of Labor and Industries shall be the sole and paramount administrative agency responsible for the administration of the provisions of the Washington Industrial Safety and Health Act of 1973 (WISHA).

The Contractor shall maintain at the project site office, or other well known place at the project site, all articles necessary for providing first aid to the injured. The Contractor shall establish, publish, and make known to all employees, procedures for ensuring immediate removal to a hospital, or doctor's care, persons, including employees, who may have been injured on the project site. Employees should not be permitted to work on the project site before the Contractor has established and made known procedures for removal of injured persons to a hospital or a doctor's care.

The Contractor shall have sole responsibility for the safety, efficiency, and adequacy of the Contractor's plant, appliances, and methods, and for any damage or injury resulting from their failure, or improper maintenance, use, or operation. The Contractor shall be solely and completely responsible for the conditions of the project site, including safety for all persons and property in the performance of the work. This requirement shall apply continuously, and not be limited to normal working hours. The required or implied duty of the Engineer to conduct construction review of the Contractor's performance does not, and shall not, be intended to include review and adequacy of the Contractor's safety measures in, on, or near the project site.

1-07.2 State Taxes

Delete this section, including its sub-sections, in its entirety and replace it with the following:

1-07.2 State Sales Tax

(June 27, 2011 APWA GSP)

The Washington State Department of Revenue has issued special rules on the State sales tax. Sections 1-07.2(1) through 1-07.2(3) are meant to clarify those rules. The Contractor should contact the Washington State Department of Revenue for answers to questions in this area. The Contracting Agency will not adjust its payment if the Contractor bases a bid on a misunderstood tax liability.

The Contractor shall include all Contractor-paid taxes in the unit bid prices or other contract amounts. In some cases, however, state retail sales tax will not be included. Section 1-07.2(2) describes this exception.

The Contracting Agency will pay the retained percentage (or release the Contract Bond if a FHWA-funded Project) only if the Contractor has obtained from the Washington State Department of Revenue a certificate showing that all contract-related taxes have been paid (RCW 60.28.051). The Contracting Agency may deduct from its payments to the Contractor any amount the Contractor may owe the Washington State Department of Revenue, whether the amount owed relates to this contract or not. Any amount so deducted will be paid into the proper State fund.

1-07.2(1) State Sales Tax — Rule 171

WAC 458-20-171, and its related rules, apply to building, repairing, or improving streets, roads, etc., which are owned by a municipal corporation, or political subdivision of the state, or by the United States, and which are used primarily for foot or vehicular traffic. This includes storm or combined sewer systems within and included as a part of the street or

INFORMATIONAL COPY ONLY - NOT FOR BIDDING

road drainage system and power lines when such are part of the roadway lighting system. For work performed in such cases, the Contractor shall include Washington State Retail Sales Taxes in the various unit bid item prices, or other contract amounts, including those that the Contractor pays on the purchase of the materials, equipment, or supplies used or consumed in doing the work.

1-07.2(2) State Sales Tax — Rule 170

WAC 458-20-170, and its related rules, apply to the constructing and repairing of new or existing buildings, or other structures, upon real property. This includes, but is not limited to, the construction of streets, roads, highways, etc., owned by the state of Washington; water mains and their appurtenances; sanitary sewers and sewage disposal systems unless such sewers and disposal systems are within, and a part of, a street or road drainage system; telephone, telegraph, electrical power distribution lines, or other conduits or lines in or above streets or roads, unless such power lines become a part of a street or road lighting system; and installing or attaching of any article of tangible personal property in or to real property, whether or not such personal property becomes a part of the realty by virtue of installation.

For work performed in such cases, the Contractor shall collect from the Contracting Agency, retail sales tax on the full contract price. The Contracting Agency will automatically add this sales tax to each payment to the Contractor. For this reason, the Contractor shall not include the retail sales tax in the unit bid item prices, or in any other contract amount subject to Rule 170, with the following exception.

Exception: The Contracting Agency will not add in sales tax for a payment the Contractor or a subcontractor makes on the purchase or rental of tools, machinery, equipment, or consumable supplies not integrated into the project. Such sales taxes shall be included in the unit bid item prices or in any other contract amount.

1-07.2(3) Services

The Contractor shall not collect retail sales tax from the Contracting Agency on any contract wholly for professional or other services (as defined in Washington State Department of Revenue Rules 138 and 244).

1-07.7 Load Limits

Section 1-07.7 is supplemented with the following:

(March 13, 1995)

If the sources of materials provided by the Contractor necessitates hauling over roads other than State Highways, the Contractor shall, at the Contractor's expense, make all arrangements for the use of the haul routes.

1-07.9 Wages

General

Section 1-07.9(1) is supplemented with the following:

The State rates incorporated in this contract are applicable to all construction activities associated with this contract.

INFORMATIONAL COPY ONLY - NOT FOR BIDDING

1-07.13 Contractor's Responsibility for Work

Repair of Damage

Section 1-07.13(4) is revised to read:

(August 6, 2001)

The Contractor shall promptly repair all damage to either temporary or permanent work as directed by the Engineer. For damage qualifying for relief under Sections 1-07.13(1), 1-07.13(2), or 1-07.13(3), payment will be made in accordance with Section 1-04.4. Payment will be limited to repair of damaged work only. No payment will be made for delay or disruption of work.

1-07.17 Utilities And Similar Facilities

Section 1-07.17 is supplemented with the following:

(******)

Locations and dimensions shown in the Plans for existing facilities are in accordance with available information obtained without uncovering, measuring, or other verification.

Public and private utilities, or their Contractors, will furnish all work necessary to adjust, relocate, replace, or construct their facilities unless otherwise provided for in the Plans or these Special Provisions. Such adjustment, relocation, replacement, or construction will be done during the prosecution of the work for this project.

The Contractor shall call the Utility Location Request Center (One Call Center), for field location, not less than two nor more than ten business days before the scheduled date for commencement of excavation which may affect underground utility facilities, unless otherwise agreed upon by the parties involved. A business day is defined as any day other than Saturday, Sunday, or a legal local, State, or Federal holiday. The telephone number for the One Call Center for this project is 1-800-424-5555. If no one-number locator service is available, notice shall be provided individually to those owners known to or suspected of having underground facilities within the area of proposed excavation.

The Contractor is alerted to the existence of Chapter 19.122 RCW, a law relating to underground utilities. Any cost to the Contractor incurred as a result of this law shall be at the Contractor's expense.

No excavation shall begin until all known facilities, in the vicinity of the excavation area, have been located and marked.

The Contractor can go to the following web site to find any changes to the Washington dig law that took effect in 2013.
http://www.utc.wa.gov/publicSafety/pipelineSafety/Pages/CallBeforeYouDig-DigLaw.aspx

The Contractor shall attend a mandatory utility preconstruction meeting with the Engineer, all affected Subcontractors, and all utility owners and their Contractors prior to beginning onsite work.

INFORMATIONAL COPY ONLY NOT FOR BIDDING

The following addresses and telephone numbers of utility companies and other agencies known or suspected of having facilities within the project limits are supplied for the Contractor's convenience:

- Grant County PUD, Jaime Esparza
  30 C Street SW,
  Ephrata, WA 98823, (509) 754-5088 Ext. 2156
  jesparz@gcpud.org
- CenturyLink, Mike Brown
  Phone (509) 839-6651; Fax (509) 839-6625;
  mike.brown@centurylink.com
- East Columbia Basin Irrigation District, Nate Andreini
  nandreini@ecbid.org>

(******)

Vibratory Rollers over USBR Crossings

Vibratory rollers shall not be used within 50 feet on each side of each USBR crossing as staked in the field.

1-07.18 Public Liability and Property Damage Insurance

Delete this section in its entirety, and replace it with the following:

1-07.18 Public Liability and Property Damage Insurance

Delete this section in its entirety, and replace it with the following:

1-07.18 Insurance

(January 4, 2016 APWA GSP)

1-07.18(1) General Requirements

A. The Contractor shall procure and maintain the insurance described in all subsections of section 1-07.18 of these Special Provisions, from insurers with a current A. M. Best rating of not less than A-: VII and licensed to do business in the State of Washington. The Contracting Agency reserves the right to approve or reject the insurance provided, based on the insurer's financial condition.

B. The Contractor shall keep this insurance in force without interruption from the commencement of the Contractor's Work through the term of the Contract and for thirty (30) days after the Physical Completion date, unless otherwise indicated below.

C. If any insurance policy is written on a claims made form, its retroactive date, and that of all subsequent renewals, shall be no later than the effective date of this Contract. The policy shall state that coverage is claims made, and state the retroactive date. Claims-made form coverage shall be maintained by the Contractor for a minimum of 36 months following the Completion Date or earlier termination of this Contract, and the Contractor shall annually provide the Contracting Agency with proof of renewal. If renewal of the claims made form of coverage becomes unavailable, or economically prohibitive, the Contractor shall purchase an extended reporting period ("tail") or execute another form of guarantee acceptable to the Contracting Agency to assure financial responsibility for liability for services performed.

INFORMATIONAL COPY ONLY - NOT FOR BIDDING

D. The Contractor's Automobile Liability, Commercial General Liability and Excess or Umbrella Liability insurance policies shall be primary and non-contributory insurance as respects the Contracting Agency's insurance, self-insurance, or self-insured pool coverage. Any insurance, self-insurance, or self-insured pool coverage maintained by the Contracting Agency shall be excess of the Contractor's insurance and shall not contribute with it.

E. The Contractor shall provide the Contracting Agency and all additional insureds with written notice of any policy cancellation, within two business days of their receipt of such notice.

F. The Contractor shall not begin work under the Contract until the required insurance has been obtained and approved by the Contracting Agency

G. Failure on the part of the Contractor to maintain the insurance as required shall constitute a material breach of contract, upon which the Contracting Agency may, after giving five business days' notice to the Contractor to correct the breach, immediately terminate the Contract or, at its discretion, procure or renew such insurance and pay any and all premiums in connection therewith, with any sums so expended to be repaid to the Contracting Agency on demand, or at the sole discretion of the Contracting Agency, offset against funds due the Contractor from the Contracting Agency.

H. All costs for insurance shall be incidental to and included in the unit or lump sum prices of the Contract and no additional payment will be made.

1-07.18(2) Additional Insured

All insurance policies, with the exception of Workers Compensation, and of Professional Liability and Builder's Risk (if required by this Contract) shall name the following listed entities as additional insured(s) using the forms or endorsements required herein:

- the Contracting Agency and its officers, elected officials, employees, agents, and volunteers

The above-listed entities shall be additional insured(s) for the full available limits of liability maintained by the Contractor, irrespective of whether such limits maintained by the Contractor are greater than those required by this Contract, and irrespective of whether the Certificate of Insurance provided by the Contractor pursuant to 1-07.18(4) describes limits lower than those maintained by the Contractor.

For Commercial General Liability insurance coverage, the required additional insured endorsements shall be at least as broad as ISO forms CG 20 10 10 01 for ongoing operations and CG 20 37 10 01 for completed operations.

1-07.18(3) Subcontractors

The Contractor shall cause each Subcontractor of every tier to provide insurance coverage that complies with all applicable requirements of the Contractor-provided insurance as set forth herein, except the Contractor shall have sole responsibility for determining the limits of coverage required to be obtained by Subcontractors.

The Contractor shall ensure that all Subcontractors of every tier add all entities listed in 1-07.18(2) as additional insureds, and provide proof of such on the policies as required by that

INFORMATIONAL COPY ONLY - NOT FOR BIDDING

section as detailed in 1-07.18(2) using an endorsement as least as broad as ISO CG 20 10 10 01 for ongoing operations and CG 20 37 10 01 for completed operations.

Upon request by the Contracting Agency, the Contractor shall forward to the Contracting Agency evidence of insurance and copies of the additional insured endorsements of each Subcontractor of every tier as required in 1-07.18(4) Verification of Coverage.

1-07.18(4) Verification of Coverage

The Contractor shall deliver to the Contracting Agency a Certificate(s) of Insurance and endorsements for each policy of insurance meeting the requirements set forth herein when the Contractor delivers the signed Contract for the work. Failure of Contracting Agency to demand such verification of coverage with these insurance requirements or failure of Contracting Agency to identify a deficiency from the insurance documentation provided shall not be construed as a waiver of Contractor's obligation to maintain such insurance.

Verification of coverage shall include:

1. An ACORD certificate or a form determined by the Contracting Agency to be equivalent.
2. Copies of all endorsements naming Contracting Agency and all other entities listed in 1-07.18(2) as additional insured(s), showing the policy number. The Contractor may submit a copy of any blanket additional insured clause from its policies instead of a separate endorsement.
3. Any other amendatory endorsements to show the coverage required herein.
4. A notation of coverage enhancements on the Certificate of Insurance shall <u>not</u> satisfy these requirements – actual endorsements must be submitted.

Upon request by the Contracting Agency, the Contractor shall forward to the Contracting Agency a full and certified copy of the insurance policy(s). If Builders Risk insurance is required on this Project, a full and certified copy of that policy is required when the Contractor delivers the signed Contract for the work.

1-07.18(5) Coverages and Limits

The insurance shall provide the minimum coverages and limits set forth below. Contractor's maintenance of insurance, its scope of coverage, and limits as required herein shall not be construed to limit the liability of the Contractor to the coverage provided by such insurance, or otherwise limit the Contracting Agency's recourse to any remedy available at law or in equity.

All deductibles and self-insured retentions must be disclosed and are subject to approval by the Contracting Agency. The cost of any claim payments falling within the deductible or self-insured retention shall be the responsibility of the Contractor. In the event an additional insured incurs a liability subject to any policy's deductibles or self-insured retention, said deductibles or self-insured retention shall be the responsibility of the Contractor.

1-07.18(5)A Commercial General Liability

Commercial General Liability insurance shall be written on coverage forms at least as broad as ISO occurrence form CG 00 01, including but not limited to liability arising from premises, operations, stop gap liability, independent contractors, products-completed operations, personal and advertising injury, and liability assumed under an insured contract. There shall be no exclusion for liability arising from explosion, collapse or underground property damage.

INFORMATIONAL COPY ONLY - NOT FOR BIDDING

The Commercial General Liability insurance shall be endorsed to provide a per project general aggregate limit, using ISO form CG 25 03 05 09 or an equivalent endorsement.

Contractor shall maintain Commercial General Liability Insurance arising out of the Contractor's completed operations for at least three years following Substantial Completion of the Work.

Such policy must provide the following minimum limits:

$1,000,000 Each Occurrence
$2,000,000 General Aggregate
$2,000,000 Products & Completed Operations Aggregate
$1,000,000 Personal & Advertising Injury each offence
$1,000,000 Stop Gap / Employers' Liability each accident

1-07.18(5)B Automobile Liability

Automobile Liability shall cover owned, non-owned, hired, and leased vehicles; and shall be written on a coverage form at least as broad as ISO form CA 00 01. If the work involves the transport of pollutants, the automobile liability policy shall include MCS 90 and CA 99 48 endorsements.

Such policy must provide the following minimum limit:

$1,000,000 Combined single limit each accident

1-07.18(5)C Workers' Compensation

The Contractor shall comply with Workers' Compensation coverage as required by the Industrial Insurance laws of the State of Washington.

Section 1-07.18 is supplemented with the following:

1-07.23 Public Convenience and Safety

Construction Under Traffic

Section 1-07.23(1) is supplemented with the following:

(January 2, 2012)
Work Zone Clear Zone

The Work Zone Clear Zone (WZCZ) applies during working and nonworking hours. The WZCZ applies only to temporary roadside objects introduced by the Contractor's operations and does not apply to preexisting conditions or permanent Work. Those work operations that are actively in progress shall be in accordance with adopted and approved Traffic Control Plans, and other contract requirements.

During nonworking hours equipment or materials shall not be within the WZCZ unless they are protected by permanent guardrail or temporary concrete barrier. The use of temporary concrete barrier shall be permitted only if the Engineer approves the installation and location.

During actual hours of work, unless protected as described above, only materials absolutely necessary to construction shall be within the WZCZ and only construction

INFORMATIONAL COPY ONLY - NOT FOR BIDDING

vehicles absolutely necessary to construction shall be allowed within the WZCZ or allowed to stop or park on the shoulder of the roadway.

The Contractor's nonessential vehicles and employees private vehicles shall not be permitted to park within the WZCZ at any time unless protected as described above.

Deviation from the above requirements shall not occur unless the Contractor has requested the deviation in writing and the Engineer has provided written approval.

Minimum WZCZ distances are measured from the edge of traveled way and will be determined as follows:

Regulatory Posted Speed	Distance from Traveled Way (Feet)
35 mph or less	10 *
40 mph	15
45 to 55 mph	20
60 mph or greater	30

* or 2-feet beyond the outside edge of sidewalk

Minimum Work Zone Clear Zone Distance

(******)

Payment

No additional compensation will be paid to the Contractor for any cost or expense incurred as a result of the requirements of this provision and all costs shall be considered incidental to and included in other applicable contract items.

PROSECUTION AND PROGRESS

Add the following new section:

1-08.0 Preliminary Matters

(May 25, 2006 APWA GSP)

Add the following new section:

1-08.0(1) Preconstruction Conference

(October 10, 2008 APWA GSP)

Prior to the Contractor beginning the work, a preconstruction conference will be held between the Contractor, the Engineer and such other interested parties as may be invited. The purpose of the preconstruction conference will be:

1. To review the initial progress schedule;
2. To establish a working understanding among the various parties associated or affected by the work;
3. To establish and review procedures for progress payment, notifications, approvals, submittals, etc.;
4. To establish normal working hours for the work;

INFORMATIONAL COPY ONLY - NOT FOR BIDDING

5. To review safety standards and traffic control; and
6. To discuss such other related items as may be pertinent to the work.

The Contractor shall prepare and submit at the preconstruction conference the following:

1. A breakdown of all lump sum items;
2. A preliminary schedule of working drawing submittals; and
3. A list of material sources for approval if applicable.

Add the following new section:

1-08.0(2) Hours of Work

(******)

Except in the case of emergency or unless otherwise approved by the Contracting Agency, the normal straight time working hours for the Contract shall be any consecutive 8-hour period between 7:00 a.m. and 6:00 p.m. of a working day with a maximum 1-hour lunch break and a 5-day work week. The normal straight time 8-hour working period for the Contract shall be established at the preconstruction conference or prior to the Contractor commencing the work.

Written permission from the Engineer is required, if a Contractor desires to perform work on holidays, Saturdays, or Sundays; before 7:00 a.m. or after 6:00 p.m. on any day; or longer than an 8-hour period on any day. The Contractor shall apply in writing to the Engineer for such permission, no later than noon on the working day prior to the day for which the Contractor is requesting permission to work.

Permission to work between the hours of 10:00 p.m. and 7:00 a.m. during weekdays and between the hours of 10:00 p.m. and 9:00 a.m. on weekends or holidays may also be subject to noise control requirements. Approval to continue work during these hours may be revoked at any time the Contractor exceeds the Contracting Agency's noise control regulations or complaints are received from the public or adjoining property owners regarding the noise from the Contractor's operations. The Contractor shall have no claim for damages or delays should such permission be revoked for these reasons.

Permission to work Saturdays, Sundays, holidays, or other than the agreed upon normal straight time working hours Monday through Friday may be given subject to certain other conditions set forth by the Contracting Agency or Engineer. These conditions may include but are not limited to:

- The Engineer may require designated representatives to be present during the work. Representatives who may be deemed necessary by the Engineer include, but are not limited to: survey crews; personnel from the Contracting Agency's material testing lab; inspectors; and other Contracting Agency employees when in the opinion of the Engineer, such work necessitates their presence.
- On non-Federal aid projects, requiring the Contractor to reimburse the Contracting Agency for the costs in excess of straight-time costs for Contracting Agency representatives who worked during such times.
- Considering the work performed on Saturdays, Sundays, and holidays as working days with regard to the contract time.
- Considering multiple work shifts as multiple working days with respect to contract time, even though the multiple shifts occur in a single 24-hour period.

INFORMATIONAL COPY ONLY - NOT FOR BIDDING

1-08.1 Subcontracting

Section 1-08.1 is supplemented with the following:

(October 12, 1998)
Prior to any subcontractor or agent beginning work, the Contractor shall submit to the Engineer a certification (WSDOT Form 420-004) that a written agreement between the Contractor and the subcontractor or between the subcontractor and any lower tier subcontractor has been executed. This certification shall also guarantee that these subcontract agreements include all the documents required by the Special Provision Federal Agency Inspection.

A subcontractor or lower tier subcontractor will not be permitted to perform any work under the contract until the following documents have been completed and submitted to the Engineer:

1. Request to Sublet Work (Form 421-012), and
2. Contractor and Subcontractor or Lower Tier Subcontractor Certification for Federal-aid Projects (Form 420-004).

The Contractor's records pertaining to the requirements of this Special Provision shall be open to inspection or audit by representatives of the Contracting Agency during the life of the contract and for a period of not less than three years after the date of acceptance of the contract. The Contractor shall retain these records for that period. The Contractor shall also guarantee that these records of all subcontractors and lower tier subcontractors shall be available and open to similar inspection or audit for the same time period.

(July 23, 2015 APWA GSP)

Delete the eighth paragraph and replace it with the following:

On all projects funded with federal assistance the Contractor shall submit "Quarterly Report of Amounts Credited as DBE Participation" (form 422-102 EF) on a quarterly basis, in which DBE Work is accomplished, for every quarter in which the Contract is active or upon completion of the project, as appropriate. The quarterly reports are due on the 20th of April, July, October, and January for the four respective quarters.

Subcontract Completion and Return of Retainage Withheld

Section 1-08.1(1) is revised to read:

(August 4, 2014)
The following procedures shall apply to all subcontracts entered into as a part of this Contract:

Requirements

1. The Prime Contractor or Subcontractor shall make payment to the Subcontractor not later than ten days after receipt of payment from the Contracting Agency for work satisfactorily completed by the Subcontractor, to the extent of each Subcontractor's interest therein.

INFORMATIONAL COPY ONLY - NOT FOR BIDDING

2. Prompt and full payment of retainage from the Prime Contractor to the Subcontractor shall be made within 30 days after Subcontractor's Work is satisfactorily completed.

3. For purposes of this Section, a Subcontractor's work is satisfactorily completed when all task and requirements of the Subcontract have been accomplished and including any required documentation and material testing.

4. Failure by a Prime Contractor or Subcontractor to comply with these requirements may result in one or more of the following:

   a. Withholding of payments until the Prime Contractor or Subcontractor complies

   b. Failure to comply shall be reflected in the Prime Contractor's Performance Evaluation

   c. Cancellation, Termination, or Suspension of the Contract, in whole or in part

   d. Other sanctions as provided by the subcontract or by law under applicable prompt pay statutes.

Conditions

This clause does not create a contractual relationship between the Contracting Agency and any Subcontractor as stated in Section 1-08.1. Also, it is not intended to bestow upon any Subcontractor, the status of a third-party beneficiary to the Contract between the Contracting Agency and the Contractor.

Payment

The Contractor will be solely responsible for any additional costs involved in paying retainage to the Subcontractors. Those costs shall be incidental to the respective Bid Items.

1-08.4 Prosecution Of Work

The first sentence of Section 1-08.4 is revised to read:

(******)
The Contractor shall begin work on **June 10, 2019**, unless otherwise approved by the Engineer.

1-08.5 Time For Completion

The third paragraph of Section 1-08.5 is revised to read:

(******)
Contract time shall begin on the first working day. The first working day shall be June 10, 2019, unless otherwise approved by the Engineer.

Section 1-08.5 is supplemented with the following:

(March 13, 1995)
This project shall be physically completed within **60 working days**.

1-08.9 Liquidated Damages

INFORMATIONAL COPY ONLY - NOT FOR BIDDING

(August 14, 2013 APWA GSP)

Revise the fourth paragraph to read:

When the Contract Work has progressed to Substantial Completion as defined in the Contract, the Engineer may determine that the work is Substantially Complete. The Engineer will notify the Contractor in writing of the Substantial Completion Date. For overruns in Contract time occurring after the date so established, the formula for liquidated damages shown above will not apply. For overruns in Contract time occurring after the Substantial Completion Date, liquidated damages shall be assessed on the basis of direct engineering and related costs assignable to the project until the actual Physical Completion Date of all the Contract Work. The Contractor shall complete the remaining Work as promptly as possible. Upon request by the Project Engineer, the Contractor shall furnish a written schedule for completing the physical Work on the Contract.

Measurement and Payment

Payments

Section 1-09.9 is supplemented with the following:

(March 13, 1995)
The quantity of the following items to be paid for on this project shall be the quantity shown in the Proposal, unless changes are made in accordance with Section 1-04.4 which affect this quantity. The quantity shown in the Proposal will be adjusted by the amount of the change and will be paid for as specified in Section 1-04.4.

*** "Roadway Excavation Incl. Haul", "Embankment Compaction"***

The quantities in the Proposal are listed only for the convenience of the Contractor in determining the volume of work involved and are not guaranteed to be accurate. The prospective bidders shall verify these quantities before submitting a bid. No adjustments other than for approved changes will be made in the quantity even though the actual quantities required may deviate from those listed.

The unit contract price for these items shall be full pay to construct and complete this portion of the work.

1-09.13 Claims Resolution

1-09.13(3) Claims $250,000 or Less
(October 1, 2005 APWA GSP)

Delete this Section and replace it with the following:

The Contractor and the Contracting Agency mutually agree that those claims that total $250,000 or less, submitted in accordance with Section 1-09.11 and not resolved by nonbinding ADR processes, shall be resolved through litigation unless the parties mutually agree in writing to resolve the claim through binding arbitration.

INFORMATIONAL COPY ONLY NOT FOR BIDDING

1-09.13(3)A Administration of Arbitration
(October 1, 2005 APWA GSP)

Revise the third paragraph to read:

The Contracting Agency and the Contractor mutually agree to be bound by the decision of the arbitrator, and judgment upon the award rendered by the arbitrator may be entered in the Superior Court of the county in which the Contracting Agency's headquarters are located. The decision of the arbitrator and the specific basis for the decision shall be in writing. The arbitrator shall use the contract as a basis for decisions.

TEMPORARY TRAFFIC CONTROL

General

Section 1-10.1 is supplemented with the following:

(April 1, 2013)
The Contracting Agency will provide the following labor, equipment and/or materials resources to the Contractor for use on the project.

*** Class A Traffic Signs as outlined in the included Construction Sign Plan and Sign Table ***

The Contractor shall notify the Engineer when each resource is to be utilized and shall provide a minimum of *** 5 (five) *** working days advance notice to allow any necessary arrangements to be made.

1-10.2 Traffic Control Management

General

Section 1-10.2(1) is supplemented with the following:

(December 1, 2008)
Only training with WSDOT TCS card and WSDOT training curriculum is recognized in the State of Washington. The Traffic Control Supervisor shall be certified by one of the following:

The Northwest Laborers-Employers Training Trust
27055 Ohio Ave.
Kingston, WA 98346
(360) 297-3035

Evergreen Safety Council
401 Pontius Ave. N.
Seattle, WA 98109
1-800-521-0778 or (206) 382-4090

The American Traffic Safety Services Association
15 Riverside Parkway, Suite 100
Fredericksburg, Virginia 22406-1022
Training Dept. Toll Free (877) 642-4637

INFORMATIONAL COPY ONLY - NOT FOR BIDDING

Phone: (540) 368-1701

1-10.2(2) Traffic Control Plans

Section 1-10.2(2) is supplemented with the following:

(******)
The County has provided the Traffic Sign Plan for this project and said plan(s) are included in these specifications and is made part of this contract.

The work contemplated in this contract will require the Contractor to take special precautions in implementing safe traffic control procedures in accordance with the MUTCD. The Contractor's attention is directed to WAC 296-155-305 as it relates to signing, signaling and flaggers. All questions concerning new standards should be directed to the Wash. State Dept. of Labor and Industries.

The Contractor will not be permitted to close 4-NE Road. One-way traffic must be kept open during working hours and two-way traffic must be restored at the end of each working day for local traffic. Access to County road intersections, local farms and residences shall be kept open at all times.

1-10.3 Traffic Control Labor, Procedures and Devices

1-10.3(3) Traffic Control Devices

Construction Signs

Section 1-10.3(3)A is supplemented with the following:

(******)
The required signs will be available to the Contractor at the Grant County Sign Shop, 124 Enterprise St. SE, Ephrata, WA, (509) 754-6082, on normal work days. The Contractor shall make arrangements with the Engineer at least five working days prior to picking up the signs. The Contractor shall sign an itemized receipt at the time of acquisition.

Signs shall be taken down and returned to Grant County Sign Shop by the Contractor when their need has ceased as determined by the Engineer. Due to County Force BST placement on this project, the signs will likely stay up until after those operations have ceased. The value of signs furnished by the Contracting Agency to the Contractor is fixed at $10.00 per square foot. The value of such signs which are damaged or not returned as provided in Sections 1-10.1 and 1-10.3(3)A will be deducted from payment due or to become due the Contractor.

Wood Sign Posts
Use the charts below to determine post size for Class A construction signs.

One Post Installation

Post Size	Min. Sign Sq. Ft.	Max Sign Sq. Ft.
4x4	-	16.0
4x6	17.0	20.0

INFORMATIONAL COPY ONLY - NOT FOR BIDDING

6x6	21.0	25.0
6x8	26.0	31.0

Two Post Installation
(For signs 5 feet or greater in width)

Post Size	Min. Sign Sq. Ft.	Max Sign Sq. Ft.
4x4	-	16.0
4x6	17.0	36.0
6x6	37.0	46.0
6x8	47.0	75.0 *

* The Engineer will determine the post size for signs greater than 75 square feet.

Barricades

Section 1-10.3(3)D is supplemented with the following:

(******)
The barricades, provided by the contractor, shall be Type III and constructed in accordance with the details shown in the MUTCD and the Standard Plans. The barricade width shall be eight (8) feet.

As may be indicated in the Signing Plan, Traffic Control Plans, or the Contract Provisions, the Contractor may be required to install signs, warning lights, or both, on barricades.

1-10.4 Measurement

Section 1-10.4 is supplemented with the following:

(******)
No unit of measurement will be made for any of the items contained in the Traffic Control Plan or Section 1-10 of the Standard Specifications.

1-10.5 Payment

Section 1-10.5(1) is supplemented with the following:

(******)
No additional compensation will be paid to the Contractor for any cost or expense incurred as a result of the requirements of this provision and all costs shall be considered incidental to and included in other applicable contract items.

DIVISION 2 EARTHWORK

CLEARING, GRUBBING, AND ROADSIDE CLEANUP

2-01.1 Description

Section 2-01.1 is supplemented with the following:

(March 13,1995)

INFORMATIONAL COPY ONLY - NOT FOR BIDDING

Clearing and grubbing on this project shall be performed within the 60 foot County right of way between Station 9+00 and Station 240+00. All trees and fences located within this right of way shall be removed by the contractor.

2-01.5 Payment

Section 2-01.5 is supplemented with the following:

(******)
The lump sum price for "Clearing and Grubbing" shall be full pay for all work described in this section.

REMOVAL OF STRUCTURES AND OBSTRUCTIONS

Removal of Pavement, Sidewalks, and Curbs

Section 2-02.3(3) is supplemented with the following:

(******)
Rotomilling Bituminous Pavement
The Contractor shall rotomill all existing bituminous pavements. The Contractor shall provide equipment capable of producing planings 2 inches in diameter or smaller. All sections planed on any given day shall be uniformly spread, watered, and re-compacted to a non-yielding surface over the existing subgrade by the end of the work day and re-graded, if necessary, to the staked line and grade before placement of crushed surfacing materials.

The equipment used to rotomill existing bituminous pavements shall be capable of rotomilling a minimum of 72" in a single pass, capable of working at a mixing depth of at least 6" without producing skips and work at a traveling speed of 1 mph or more.

Payment

Section 2-02.5 is supplemented with the following:

(******)
"Rotomilling Bituminous Pavement", per square yard.

ROADWAY EXCAVATION AND EMBANKMENT

Construction Requirements

Disposal Of Surplus Material

Section 2-03.3(7)A is supplemented with the following:

(******)
A waste site has not been provided by the County for the disposal of excess material.

DIVISION 4 BASES

BALLAST AND CRUSHED SURFACING

INFORMATIONAL COPY ONLY - NOT FOR BIDDING

Construction Requirements

Equipment

The first sentence of Section 4-04.3(1) is revised to read:

(******)
All equipment necessary for the satisfactory performance of this construction shall be on the project and approved by the Engineer prior to beginning work. The Contractor shall demonstrate that equipment of sufficient size, number, and reliability has been provided to meet the project schedule submitted by the Contractor, if requested by the Engineer.

Placing and Spreading

The third paragraph of Section 4-04.3(4) is supplemented with the following:

(******)
The Contractor shall fill each hauling vehicle with the same quantity of crushed aggregate. This is necessary in order to provide consistent spreads within the limits of the specific section determined by the Engineer.

The Contractor shall place the material in such a way as to minimize the impact of the hauling vehicles. Hauling over any of the surfacing materials prior to processing shall not be permitted.

Miscellaneous Requirement

The second sentence of the first paragraph of Section 4-04.3(7) is revised to read:

(******)
Each course of surfacing material shall be placed in its entirety before placing the succeeding course unless otherwise authorized by the Engineer. The Contractor shall repair any segregated areas by reprocessing the effected section of each course before placing any additional material.

DIVISION 8 MISCELLANEOUS CONSTRUCTION

EROSION CONTROL AND WATER POLLUTION CONTROL

Construction Requirements

Mulching

Section 8-01.3(2)D is supplemented with the following:

(******)
A 50%/50% mix of Wood cellulose fiber suitable for use with a hydroseeder and Hydro-Straw with Tackifier (Hydrostraw Guar Plus or approved equal) shall be applied at a rate of 2,000 pounds per acre. 50/50 mix shall be sufficiently mixed in the truck prior to application.

INFORMATIONAL COPY ONLY - NOT FOR BIDDING

GUARDRAIL

Construction Requirements

(******)
Section 8-11.3(1)D is supplemented with the following:

All guardrail, hardware, transition sections, rail elements of the anchors and anchors, shall remain the property of Grant County and be transported, by the contractor, to the Grant County shop located at 123 Enterprise St. SE, in Ephrata WA. All cost for this work shall be included in the bid item "Remove Existing Beam Guardrail and Anchors".

MONUMENT

Construction Requirements

(******)
Section 8-13.3 is supplemented with the following:

All work shall be performed by a licensed surveyor.

The Contractor shall be required to set or reset monuments and monument case and covers at right of way points of intersection, curvature, and tangency within the project limits and as shown on the plans. Pursuant to RCW 58.24.040(8), a permit to remove or destroy a survey monument shall be acquired from the Washington State Dept. of Natural Resources for all existing survey monuments and markers.

The Contractor shall leave all existing monuments in place unless the road profile requires removal. When the new road profile requires the existing monument to be reset the Contractor shall reuse and reset existing monument and record a new elevation on the brass disc or provide a supplementary brass inset with new elevation stamped on the monument. The Contractor shall give the Engineer a certified report from the Surveyor regarding the final disposition and condition of all monuments discovered within the project limits.

Payment

(******)
The unit contract price bid per each for "Monument" shall be full compensation for performing the work outlined herein and in accordance with the plans and specifications.

PAVEMENT MARKING

Materials

(******)
The first sentence of Section 8-22.2 is replaced with the following:

Paint Material for pavement line shall be **Waterborne** paint and be chosen from WSDOT QPL listings for 9-34.2(5) – Pavement Marking – Low VOC Waterborne Paint.

Construction Requirements

INFORMATIONAL COPY ONLY - NOT FOR BIDDING

Preliminary Spotting
The first sentence of Section 8-22.3(1) is replaced with the following:

(******)
The Contractor shall use established control points to assist in the preliminary spotting of the lines to be marked. Where control points are unavailable the Contractor shall establish such control as necessary to provide accurate preliminary spotting for pavement marking. The Engineer shall provide control points for no-pass zones.

Marking Application
Section 8-22.3(3) is supplemented with the following:

(******)
This contract contains new striping work and will require two applications of paint on a thoroughly swept pavement surface. 10 mils on the first pass and 15 mils on the second pass in the opposite direction. Glass beads for retro-reflective applications shall be applied at the rate of 7 pounds per gallon of paint.

The Contractor shall use a three gun paint spray system for all striping on this contract. Center skip stripe shall be based on the center gun, regardless of whether it is needed for a particular line, based on variable pass/no pass zones. In Double No-Pass zones, the two outer guns shall be used for the double yellow to be painted.

The striping on this project will be performed after Grant County crews have completed the BST surfacing.

DIVISION 9 MATERIALS

EROSION CONTROL AND ROADSIDE PLANTING

9-14.2 Seed
Section 9-14.2 is supplemented with the following:

(******)
The following Roadside seed mix is approved for application on this project.

Kind and variety of Seed in mixture	% By Weight	Minimum % Pure Seed	Minimum % Germination
Special Eastern Washington Roadside Mix Containing*:			
Bluegrass, Sherman Big	10	9.5	70
Wheatgrass, Crested, Nordan	70	68.5	85
Wheatgrass, Thickspike, Critana	10	9.5	85
Sandburg	5	4.5	
Sheep Fescue	5	4.5	
Weed Seed		2.0 (max)	
Inert and other crop		3.5 (max)	

INFORMATIONAL COPY ONLY - NOT FOR BIDDING

Total	100.0

*Special Eastern Washington Roadside Mix shall be applied at the rate of twenty-one (21) pounds per acre on all areas to be seeded.

9-14.3 Fertilizer

Section 9-14.3 is supplemented with the following:

(******)

The Contractor shall use 16-16-16 slow release fertilizer, and it shall be applied at the rate of 125 pounds per acre.

(April 1, 2019)
Standard Plans

The State of Washington Standard Plans for Road, Bridge and Municipal Construction M21-01 transmitted under Publications Transmittal No. PT 16-048, effective August 6, 2018 is made a part of this contract.

INFORMATIONAL COPY ONLY - NOT FOR BIDDING

1
2
3
4

INFORMATIONAL COPY ONLY - NOT FOR BIDDING

PROPOSAL

To: Board of County Commissioners
Grant County, Washington

Date:_____, 2018

This certifies that the undersigned has examined the location of **4-NE ROAD RECONSTRUCTION PROJECT, CRP 16-09, in Grant County, Washington,** and that the plans, specifications and contract governing the work embraced in the improvement and the method by which payment will be made for said work is understood. The undersigned hereby proposes to undertake and complete the work embraced in this improvement, or as much thereof as can be completed with the money available in accordance with said plans, specifications and contract and at the following schedule of rates and prices.

4-NE ROAD RECONSTRUCTION PROJECT

Note: Unit prices for all items, all extensions, and total amount must be shown. Please type or use ink. Please initial all changes.

Item No.	Plan Quantity	Item Description	Price per Unit* Dollars . Cents	Total Amount Dollars . Cents
PREPARATION				
1	1 Lump Sum	Mobilization	At ////////-///// Per Lump Sum	.
2	1 Lump Sum	Clearing and Grubbing	At ////////-///// Per Lump Sum	.
GRADING				
3	70,968 S.Y.	Rotomilling Bituminous Pavement	At . Per Square Yard	.
4	19,074 C.Y.	Roadway Excavation	At . Per Cubic Yard	.
5	11,234 C.Y.	Embankment Compaction	At . Per Cubic Yard	.
DRAINAGE				
6	305 L.F.	Plain Steel Culvert Pipe 0.064" Th. – 12" Diameter	At . Per Linear Foot	.

INFORMATIONAL ONLY
INFORMATIONAL COPY ONLY NOT FOR BIDDING

Item No.	Plan Quantity	Item Description	Price per Unit* Dollars . Cents	Total Amount Dollars . Cents
7	561 L.F.	Plain Steel Culvert Pipe 0.064" Th. – 18" Diameter	At . Per Linear Foot	.

SURFACING

8	33,000 Ton	Crushed Surfacing Base Course	At . Per Ton	.
9	22,000 Ton	Crushed Surfacing Top Course	At . Per Ton	.

HOT MIX ASPHALT

10	560 Ton	Commercial HMA	At . Per Ton	.

TRAFFIC

11	2,790 L.F.	Remove Existing Beam Guardrail and Anchors	At . Per Linear Foot	.
12	2,290 Lin. Ft.	Beam Guardrail Type 31	At . Per Linear Foot	.
13	10 Each	Beam Guardrail Type 31 – Non-Flared Terminal	At . Per Each	.
14	60,630 Lin. Ft.	Paint Line	At . Per Linear Foot	.

OTHER ITEMS

15	1 Lump Sum	SPCC Plan	At ////////.///// Per Lump Sum	.

INFORMATIONAL ONLY
INFORMATIONAL ONLY
NOT FOR BIDDING

Item No.	Plan Quantity	Item Description	Price per Unit* Dollars . Cents	Total Amount Dollars . Cents
16	9 Each	Monument	At . Each	.
17	1 Lump Sum	Trimming and Cleanup	At ////////./////// Per Lump Sum	.
18	9 Acre	Seeding, Fertilizing and Mulching, With Roadside Mix	At . Acre	.
19	-$1.00 Est.	Minor Change	At ////////./////// Est.	-$1.00
			Project Total	.

INFORMATIONAL ONLY
INFORMATIONAL COPY ONLY NOT FOR BIDDING

Failure to return this Declaration as part of the bid proposal package will make the bid nonresponsive and ineligible for award.

NON-COLLUSION DECLARATION

I, by signing the proposal, hereby declare, under penalty of perjury under the laws of the United States that the following statements are true and correct:

1. That the undersigned person(s), firm, association, or corporation has (have) not, either directly or indirectly, entered into any agreement, participated in any collusion, or otherwise taken any action in restraint of free competitive bidding in connection with the project for which this proposal is submitted.

2. **That by signing the signature page of this proposal, I am deemed to have signed and have agreed to the provisions of this declaration.**

NOTICE TO ALL BIDDERS

To report bid rigging activities call:

1-800-424-9071

The U.S. Department of Transportation (USDOT) operates the above toll-free "hotline" Monday through Friday, 8:00 a.m. to 5:00 p.m. Eastern Time. Anyone with knowledge of possible bid rigging, bidder collusion or other fraudulent activities should use the "hotline" to report such activities.

The "hotline" is part of USDOT's continuing effort to identify and investigate highway construction contract fraud and abuse and is operated under the direction of the USDOT Inspector General. All information will be treated confidentially and caller anonymity will be respected.

INFORMATIONAL ONLY
INFORMATIONAL ONLY
NOT FOR BIDDING

Revised 6/14

From DOT Form 272-036I EF
07/2011

Certification of Compliance with Wage Payment Statutes

The bidder hereby certifies that, within the three-year period immediately preceding the bid solicitation date (7/25/2017), the bidder is not a "willful" violator, as defined in RCW 49.48.082, of any provision of chapters 49.46, 49.48, or 49.52 RCW, as determined by a final and binding citation and notice of assessment issued by the Department of Labor and Industries or through a civil judgment entered by a court of limited or general jurisdiction.

I certify under penalty of perjury under the laws of the State of Washington that the foregoing is true and correct.

_____
Bidder's Business Name

_____
Signature of Authorized Official*

_____
Printed Name

_____
Title

_____ _____ _____
Date City State

Check One:
Sole Proprietorship ☐ Partnership ☐ Joint Venture ☐ Corporation ☐

State of Incorporation or if not a corporation, State where business entity was formed:

_____

If a co-partnership, give firm name under which business is transacted:

_____

**** If a corporation, proposal must be executed in the corporate name by the president or vice-president (or any other corporate officer accompanied by evidence of authority to sign). If a co-partnership, proposal must be executed by a partner.***

INFORMATIONAL ONLY
INFORMATIONAL COPY ONLY NOT FOR BIDDING

Proposal – Signature Page

The bidder is hereby advised that by signature of this proposal he/she is deemed to have acknowledged all requirements and signed all certificates contained herein.

A proposal guaranty in an amount of five percent (5%) of the total bid, based upon the approximate estimate of quantities at the above prices and in the form as indicated below, is attached hereto:

Cash	☐	In the Amount of _____
Cashier's Check	☐	_____ Dollars
Certified Check	☐	($_____) Payable to the Grant County Treasurer
Proposal Bond	☐	In the Amount of 5% of the Bid

Receipt is hereby acknowledged of addendum(s) No.(s) _____, _____ & _____

Signature of Authorized Official(s)

Proposal Must Be Signed →

_____

_____

Please Print Name of Authorized Official

Firm Name _____

Address _____

_____

_____

State of Washington Contractor's License No. _____

Federal ID No. _____

Note:

(1) This proposal form is not transferable and any alteration entered hereon without prior permission from the County Engineer will be cause for considering the proposal irregular and subsequent rejection of bid.

(2) Please refer to section 1-02.6 of the standard specifications, re:"Preparation of Proposal" or "Article 4" of the instructions to bidders for building construction jobs.

(3) Should it be necessary to modify this proposal either in writing or by electronic means, please make reference to the following proposal number in your communication: _____

_____

Revised 8/95

INFORMATIONAL ONLY
INFORMATIONAL ONLY
NOT FOR BIDDING

Statement of Contractor Qualifications

To: Board of County Commissioners
Grant County, Washington

Date: _____, 2018

RE: **4-NE ROAD RECONSTRUCTION PROJECT, CRP 16-09**

I hereby maintain that I am a responsible bidder as contemplated by the policies of the State of Washington and Chapter 36.77 of the Revised Code of Washington.

1. My permanent business name and address is _____ which I have maintained for ____ years. My phone is (____)_____ Fax (____)_____
2. I have adequate plant equipment to expeditiously and properly perform the work contemplated for Grant County, Washington. **Description of work:** This contract provides for the reconstruction of 4.38 miles of two lane county road in Grant County, WA, and includes roadway excavation, embankment compaction, crushed surfacing base course, crushed surfacing topo course, guardrail, seeding and fertilizing, and other work all in accordance with the attached Contract Plans, these Contract Provisions and the Standard Specifications. (Please list equipment to be used on this project. Attach list if necessary.)
   _____
   _____
3. I have adequate funds to promptly meet obligations incident to this work. (Provide bank, contact & phone.) a) _____
   b) _____ c) _____
4. I have adequate experience in this class of work and I am thoroughly familiar with the specifications used in this project. I have constructed the following similar improvements: (Provide project name, contact & phone.)
   a) _____
   b) _____
5. I have submitted and maintain annually a "Standard Questionnaire and Financial Statement" to the Washington State Department of Transportation (WSDOT): Yes ☐ No ☐ Region: _____
   WSDOT has determined: a) I am prequalified to _____
   _____ in the amount of _____.__
   b) I have failed to be prequalified for the following reasons: ___
   _____.

   The Contracting Agency may determine a prospective Bidder who is not prequalified to perform certain types of work within the financial and experience constraints determined by WSDOT to be not responsible and refuse to award a contract.

   The Board of County Commissioners shall proceed to award the contract to the lowest and best bidder, but may reject any or all bids if in its opinion good cause exists therefor. (RCW 36.77.040)

I hereby certify that the above statements are true and accurate.

Very truly yours,

By: _____

(Print Name) _____

Company Name: _____

Address: _____

City, State, Zip: _____

Washington State Contractor's License No.: _____

Revised 4/02

INFORMATIONAL ONLY
NOT FOR BIDDING

Bid Bond

KNOW ALL MEN BY THESE PRESENTS:

That we, _____, as Principal, and _____, as Surety, are held and firmly bound unto Grant County, Washington, as Obligee, in the penal sum of _____ Dollars ($_____) for the payment of which the Principal and Surety bind themselves, their heirs, executors, administrators, successors and assigns, jointly and severally, by these presents.

The condition of the obligation is such that if the Obligee shall make any award to the Principal for **4-NE ROAD RECONSTRUCTION PROJECT, CRP 16-09,** located in Grant County, Washington, according to the terms of the proposal or bid made by the Principal therefor, and the Principal shall duly make and enter into a contract with the Obligee in accordance with the terms of said proposal or bid and award and shall give bond for the faithful performance thereof, with the Surety or Sureties approved by the Obligee; or if the principal shall, in case of failure so to do, pay and forfeit to the Obligee the penal amount of the deposit specified in the call for bids, then this obligation shall be null and void; otherwise it shall be and remain in full force and effect and the Surety shall forthwith pay and forfeit to the Obligee, as penalty and liquidated damages, the amount of this bond.

SIGNED, SEALED AND DATED THIS ____ DAY OF _____ , 2018

Principal _____

Surety _____

Attorney-in-Fact _____

INFORMATIONAL ONLY
INFORMATIONAL ONLY

Grant County Public Works
124 Enterprise St. SE
Ephrata, WA. 98823

Local Agency Subcontractor List

Prepared in compliance with RCW 39.30.060 as amended

To Be Submitted with the Bid Proposal

Project Name: **4-NE ROAD RECONSTRUCTION PROJECT**

Failure to list subcontractors with whom the bidder, if awarded the contract, will directly subcontract for performance of the work of heating, ventilation and air conditioning, plumbing, as described in Chapter 18.106 RCW, and electrical as described in Chapter 19.28 RCW, or naming more than one subcontractor to perform the same work will result in your bid being non-responsive and therefore void.

Subcontractor(s) with whom the bidder will directly subcontract that are proposed to perform the work of heating, ventilation and air conditioning, plumbing, as described in Chapter 18.106 RCW, and electrical as described in Chapter 19.28 RCW **must** be listed below. The work to be performed is to be listed below the subcontractor(s) name.

To the extent the Project includes one or more categories of work referenced in RCW 39.30.060. and no subcontractor is listed below to perform such work, the bidder certifies that the work will either (i) be performed by the bidder itself, or (ii) be performed by a lower tier subcontractor who will not contract directly with the bidder.

Subcontractor Name _____
Work to be Performed _____

Subcontractor Name _____
Work to be Performed _____

Subcontractor Name _____
Work to be Performed _____

Subcontractor Name _____
Work to be Performed _____

Subcontractor Name _____
Work to be Performed _____

Bidder's are notified that the opinion of the enforcement agency PVC or metal conduit, junction boxes, etc, are considered electrical equipment and must be installed by a licensed electrical contractor, even if the installation is for future use and no wiring or electric current is connected during the project.
A licensed electrical contractor must be listed to perform the work.

INFORMATIONAL COPY ONLY
INFORMATIONAL ONLY

INFORMATIONAL ONLY
INFORMATIONAL COPY ONLY
NOT FOR BIDDING

CONTRACT

THIS AGREEMENT, between the Board of County Commissioners of Grant County, State of Washington, acting under and by virtue of Chapter 36.77 of the Revised Code of Washington, as amended, hereinafter called the County, and _____, for itself, its heirs, executors, administrators, successors and assigns, hereinafter called the Contractor.

WITNESSETH:

That in consideration of the payments, covenants, and agreements, hereinafter mentioned, and attached and made a part of this agreement, to be made and performed by the parties hereto, and the parties hereto covenant and agree as follows:

DESCRIPTION OF WORK:

1. The Contractor shall do all work and furnish all tools, materials, and equipment necessary to improve and complete **4-NE ROAD RECONSTRUCTION PROJECT, CRP 16-09,** located in Grant County, Washington, as proposed in a bid opened **1:30 P.M., Tuesday, May 21, 2019** in accordance with and as described in the herein attached plans and standard specifications, and in full compliance with the terms, conditions, and stipulations herein set forth and attached, now referred to any by such reference incorporated herein and made part hereof as fully for all purposes as if here set forth at length, and shall perform any alterations in or additions to the work covered by this contract and every part thereof and any force account work may be ordered as provided in this contract and every part thereof.

2. The Contractor shall provide and be at the expense of all materials, labor, carriage, tools, implements and conveniences and things of every description that may be requisite for the transfer of materials and for constructing and completing the work provided for in this contract and every part thereof.

3. The County hereby promises and agrees with the Contractor to employ, and does employ the Contractor to provide the materials and to do and cause to be done the above described work and to complete and finish the same according to the attached plans and specifications and the terms and conditions herein contained, and hereby contracts to pay for the same according to the attached specifications and the schedule of unit or itemized prices hereto attached, at the time and in the manner and upon the conditions provided for in this contract and every part thereof. The County further agrees to employ the Contractor to perform any alterations in or additions to the work covered by this contract and every part thereof and any force account work that may be ordered and pay for same under the terms of this contract and the attached plans and specifications.

4. The Contractor for himself, and for his heirs, executors, administrators and assigns, and successors and assigns, does hereby agree to the full performance of all the covenants herein contained upon the part of the Contractor.

5. It is further provided that no liability shall attach to the County by reason of entering into this contract, except as expressly provided herein.

INFORMATIONAL ONLY
NOT FOR BIDDING

IN WITNESS WHEREOF, the said Contractor has executed this instrument, and the said Board of County Commissioners of Grant County has caused this instrument to be executed by and in the name of said Board by its Members, duly attested by its Clerk, the day and year below written, and the seal of said Board to be hereunto affixed on said date.

____day of _____, 2018

_____
Signature

_____
Print Name

_____
Firm Name

_____
Address

_____
City State Zip

(____)_____
Phone

ATTEST:

_____
Clerk of the Board

APPROVED AS TO FORM:

____day of _____,2018

_____
Deputy Prosecuting Attorney

BOARD OF COUNTY COMMISSIONERS
OF GRANT COUNTY, WASHINGTON

this ____ day of _____, 2018

_____
Chair

_____
Member

_____
Member

INFORMATIONAL ONLY
INFORMATIONAL COPY ONLY
NOT FOR BIDDING

CONTRACT BOND

KNOW ALL MEN BY THESE PRESENTS:

That we, the undersigned, _____, as principal, and _____, a corporation organized and existing under the laws of the State of _____, as surety corporation, and qualified under the laws of the State of Washington to become surety upon bonds of contractors with municipal corporations, as surety, are jointly and severally held and firmly bound to Grant County, Washington, in the penal sum of

_____

($_____) for the payment of which sum on demand we bind ourselves and our successors, heirs, administrators or personal representatives, as the case may be.

This obligation is entered into in pursuance of the statutes of the State of Washington, the Ordinances of Grant County, Washington.

Dated at _____, Washington, this ____ day of _____, 2018.

The conditions of the above obligation are such that:

WHEREAS, on **May 21, 2019**, the Board of County Commissioners of said Grant County has let or is about to let to the Principal, a certain contract, the said contract providing for the improvement of **4-NE ROAD RECONSTRUCTION PROJECT, CRP 16-09,** located in Grant County, Washington, (which contract is referred to herein and is made a part hereof as though attached hereto), and

WHEREAS, the said Principal has accepted, or is about to accept, the said contract, and undertake to perform the work therein provided for in the manner and within the time set forth;

NOW, THEREFORE, if the said Principal shall faithfully perform all of the provisions of said contract in the manner and within the time therein set forth or within such extensions of time as may be granted under said contract, and shall pay all laborers, mechanics, subcontractors and material men, and all persons who shall supply said Principal or subcontractors with provisions and supplies for the carrying on of said work, and shall hold said Grant County harmless from any loss or damage occasioned to any person or property by reason of any carelessness or negligence on the part of said Principal, or any subcontractor in the performance of said work and shall indemnify and hold Grant County harmless from any damage or expense by reason of failure of performance as specified in said contract or from defects appearing or developing in the material or workmanship provided or performed under said contract, and until the same is accepted, then and in that event this obligation shall be void but otherwise it shall be and remain in full force and effect.

Countersigned:

_____
Licensed Agent/Surety Co.

_____
Principal

_____

_____
Attorney-in-Fact, Surety

_____

Approved as to Form:

(_____)_____
Firm, Street Address (No P.O. Box), Phone of Local Office of Agent

_____, 2018

_____
Deputy Prosecuting Attorney

INFORMATIONAL ONLY
NOT FOR BIDDING

INFORMATIONAL ONLY
INFORMATIONAL COPY ONLY
NOT FOR BIDDING

TITLE VI – Contractor Requirements

During the performance of this contract, the contractor/consultant, for itself, its assignees and successors in interest (hereinafter referred to as the "contractor") agrees as follows:

1. Compliance with Regulations

The contractor shall comply with the Regulations relative to non-discrimination in federally assisted programs of United States Department of Transportation (USDOT), Title 49, Code of Federal Regulations, part 21, as they may be amended from time to time, (hereinafter referred to as the Regulations), which are herein incorporated by reference and made a part of this contract.

2. Non-discrimination

The contractor, with regard to the work performed by it during the contract, shall not discriminate on the grounds of race, color, sex, or national origin in the selection and retention of sub-contractors, including procurement of materials and leases of equipment. The contractor shall not participate either directly or indirectly in the discrimination prohibited by Section 21.5 of the Regulations, including employment practices when the contract covers a program set forth in Appendix B of the Regulations.

3. Solicitations for Sub-contracts, Including Procurement of Materials and Equipment

In all solicitations either by competitive bidding or negotiations made by the contractor for work to be performed under a sub-contract, including procurement of materials or leases of equipment, each potential sub-contractor or supplier shall be notified by the contractor of the contractor's obligations under this contract and the Regulations relative to non-discrimination on the grounds of race, color, sex, or national origin.

4. Information and Reports

The contractor shall provide all information and reports required by the Regulations or directives issued pursuant thereto, and shall permit access to its books, records, accounts, other sources of information and its facilities as may be determined by the contracting agency or the appropriate federal agency to be pertinent to ascertain compliance with such Regulations, orders and instructions. Where any information required of a contractor is in the exclusive possession of another who fails or refuses to furnish this information, the contractor shall so certify to WSDOT or the USDOT as appropriate, and shall set forth what efforts it has made to obtain the information.

5. Sanctions for Non-compliance

In the event of the contractor's non-compliance with the non-discrimination provisions of this contract, the contracting agency shall impose such contract sanctions as it or the USDOT may determine to be appropriate, including, but not limited to:

- Withholding of payments to the contractor under the contract until the contractor complies, and/or;
- Cancellation, termination, or suspension of the contract, in whole or in part

6. Incorporation of Provisions

The contractor shall include the provisions of paragraphs (1) through (5) in every sub-contract, including procurement of materials and leases of equipment, unless exempt by the Regulations, or directives issued pursuant thereto. The contractor shall take such action with respect to any sub-contractor or procurement as the contracting agency or USDOT may direct as a means of enforcing such provisions including sanctions for non-compliance.

Provided, however, that in the event a contractor becomes involved in, or is threatened with, litigation with a sub-contractor or supplier as a result of such direction, the contractor may request WSDOT enter into such litigation to protect the interests of the state and, in addition, the contractor may request the USDOT enter into such litigation to protect the interests of the United States.

INFORMATIONAL ONLY
NOT FOR BIDDING

INFORMATIONAL ONLY
INFORMATIONAL COPY ONLY
NOT FOR BIDDING

TITLE VI – Contractor Requirements

During the performance of this contract, the contractor/consultant, for itself, its assignees and successors in interest (hereinafter referred to as the "contractor") agrees as follows:

1. Compliance with Regulations

The contractor shall comply with the Regulations relative to non-discrimination in federally assisted programs of United States Department of Transportation (USDOT), Title 49, Code of Federal Regulations, part 21, as they may be amended from time to time, (hereinafter referred to as the Regulations), which are herein incorporated by reference and made a part of this contract.

2. Non-discrimination

The contractor, with regard to the work performed by it during the contract, shall not discriminate on the grounds of race, color, sex, or national origin in the selection and retention of sub-contractors, including procurement of materials and leases of equipment. The contractor shall not participate either directly or indirectly in the discrimination prohibited by Section 21.5 of the Regulations, including employment practices when the contract covers a program set forth in Appendix B of the Regulations.

3. Solicitations for Sub-contracts, Including Procurement of Materials and Equipment

In all solicitations either by competitive bidding or negotiations made by the contractor for work to be performed under a sub-contract, including procurement of materials or leases of equipment, each potential sub-contractor or supplier shall be notified by the contractor of the contractor's obligations under this contract and the Regulations relative to non-discrimination on the grounds of race, color, sex, or national origin.

4. Information and Reports

The contractor shall provide all information and reports required by the Regulations or directives issued pursuant thereto, and shall permit access to its books, records, accounts, other sources of information and its facilities as may be determined by the contracting agency or the appropriate federal agency to be pertinent to ascertain compliance with such Regulations, orders and instructions. Where any information required of a contractor is in the exclusive possession of another who fails or refuses to furnish this information, the contractor shall so certify to WSDOT or the USDOT as appropriate, and shall set forth what efforts it has made to obtain the information.

5. Sanctions for Non-compliance

In the event of the contractor's non-compliance with the non-discrimination provisions of this contract, the contracting agency shall impose such contract sanctions as it or the USDOT may determine to be appropriate, including, but not limited to:

- Withholding of payments to the contractor under the contract until the contractor complies, and/or;
- Cancellation, termination, or suspension of the contract, in whole or in part

6. Incorporation of Provisions

The contractor shall include the provisions of paragraphs (1) through (5) in every sub-contract, including procurement of materials and leases of equipment, unless exempt by the Regulations, or directives issued pursuant thereto. The contractor shall take such action with respect to any sub-contractor or procurement as the contracting agency or USDOT may direct as a means of enforcing such provisions including sanctions for non-compliance.

Provided, however, that in the event a contractor becomes involved in, or is threatened with, litigation with a sub-contractor or supplier as a result of such direction, the contractor may request WSDOT enter into such litigation to protect the interests of the state and, in addition, the contractor may request the USDOT enter into such litigation to protect the interests of the United States.

INFORMATIONAL COPY ONLY - NOT FOR BIDDING

INFORMATIONAL COPY ONLY - NOT FOR BIDDING

State of Washington
Department of Labor & Industries

Prevailing Wage Section - Telephone 360-902-5335
PO Box 44540, Olympia, WA 98504-4540

Washington State Prevailing Wage

The PREVAILING WAGES listed here include both the hourly wage rate and the hourly rate of fringe benefits. On public works projects, worker's wage and benefit rates must add to not less than this total. A brief description of overtime calculation requirements are provided on the Benefit Code Key.

Journey Level Prevailing Wage Rates for the Effective Date: 5/2/2019

INFORMATIONAL COPY ONLY - NOT FOR BIDDING

County	Trade	Job Classification	Wage	Holiday	Overtime	Note
Grant	Flaggers	Journey Level	$37.19	7B	1M	
Grant	Laborers	Air And Hydraulic Track Drill	$39.83	7B	1M	
Grant	Laborers	Asphalt Raker	$39.83	7B	1M	
Grant	Laborers	Asphalt Roller, Walking	$39.56	7B	1M	
Grant	Laborers	Brick Pavers	$39.29	7B	1M	
Grant	Laborers	Brush Hog Feeder	$39.29	7B	1M	
Grant	Laborers	Brush Machine	$39.83	7B	1M	
Grant	Laborers	Caisson Worker, Free Air	$39.83	7B	1M	
Grant	Laborers	Carpenter Tender	$39.29	7B	1M	
Grant	Laborers	Cement Finisher Tender	$39.56	7B	1M	
Grant	Laborers	Cement Handler	$39.29	7B	1M	
Grant	Laborers	Chain Saw Operator & Faller	$39.83	7B	1M	
Grant	Laborers	Clean-up Laborer	$39.29	7B	1M	
Grant	Laborers	Compaction Equipment	$39.56	7B	1M	
Grant	Laborers	Concrete Crewman	$39.29	7B	1M	
Grant	Laborers	Concrete Saw, Walking	$39.56	7B	1M	
Grant	Laborers	Concrete Signalman	$39.29	7B	1M	
Grant	Laborers	Concrete Stack	$39.83	7B	1M	
Grant	Laborers	Confined Space Attendant	$39.29	7B	1M	
Grant	Laborers	Crusher Feeder	$39.29	7B	1M	
Grant	Laborers	Demolition	$39.29	7B	1M	
Grant	Laborers	Demolition Torch	$39.56	7B	1M	
Grant	Laborers	Dope Pot Fireman, Non-mechanical	$39.56	7B	1M	
Grant	Laborers	Driller Helper (when Required To Move & Position Machine)	$39.56	7B	1M	
Grant	Laborers	Drills With Dual Masts	$40.11	7B	1M	
Grant	Laborers	Dry Stack Walls	$39.29	7B	1M	
Grant	Laborers	Dumpman	$39.29	7B	1M	
Grant	Laborers	Erosion Control Laborer	$39.29	7B	1M	

Grant	Laborers	Final Detail Cleanup (i.e., Dusting, Vacuuming, Window Cleaning; Not Construction Debris Cleanup)	$37.19	7B	1M	
Grant	Laborers	Firewatch	$39.29	7B	1M	
Grant	Laborers	Form Cleaning Machine Feeder, Stacker	$39.29	7B	1M	
Grant	Laborers	Form Setter, Paving	$39.56	7B	1M	
Grant	Laborers	General Laborer	$39.29	7B	1M	
Grant	Laborers	Grade Checker	$41.82	7B	1M	
Grant	Laborers	Grout Machine Header Tender	$39.29	7B	1M	
Grant	Laborers	Guard Rail	$39.29	7B	1M	
Grant	Laborers	Gunite	$39.83	7B	1M	
Grant	Laborers	Hazardous Waste Worker (level A)	$40.11	7B	1M	
Grant	Laborers	Hazardous Waste Worker (level B)	$39.83	7B	1M	
Grant	Laborers	Hazardous Waste Worker (level C)	$39.56	7B	1M	
Grant	Laborers	Hazardous Waste Worker (level D)	$39.29	7B	1M	
Grant	Laborers	Hdpe Or Similar Liner Installer	$39.29	7B	1M	
Grant	Laborers	High Scaler	$39.83	7B	1M	
Grant	Laborers	Jackhammer Operator Miner, Class "b"	$39.56	7B	1M	
Grant	Laborers	Laser Beam Operator	$39.83	7B	1M	
Grant	Laborers	Miner, Class "a"	$39.29	7B	1M	
Grant	Laborers	Miner, Class "c"	$39.83	7B	1M	
Grant	Laborers	Miner, Class "d"	$40.11	7B	1M	
Grant	Laborers	Monitor Operator, Air Track Or Similar Mounting	$39.83	7B	1M	
Grant	Laborers	Mortar Mixer	$39.83	7B	1M	
Grant	Laborers	Nipper	$39.29	7B	1M	
Grant	Laborers	Nozzleman	$39.83	7B	1M	
Grant	Laborers	Nozzleman, Water (to Include Fire Hose), Air Or Steam	$39.56	7B	1M	
Grant	Laborers	Pavement Breaker, 90 Lbs. & Over	$39.83	7B	1M	
Grant	Laborers	Pavement Breaker, Under 90 Lbs.	$39.56	7B	1M	
Grant	Laborers	Pipelayer	$39.83	7B	1M	
Grant	Laborers	Pipelayer, Corrugated Metal Culvert And Multi-plate	$39.56	7B	1M	
Grant	Laborers	Pipewrapper	$39.83	7B	1M	
Grant	Laborers	Plasterer Tenders	$39.83	7B	1M	
Grant	Laborers	Pot Tender	$39.56	7B	1M	
Grant	Laborers	Powderman	$41.48	7B	1M	
Grant	Laborers	Powderman Helper	$39.56	7B	1M	

INFORMATIONAL COPY ONLY - NOT FOR BIDDING

Grant	Laborers	Power Buggy Operator	$39.56	7B	1M	
Grant	Laborers	Power Tool Operator, Gas, Electric, Pneumatic	$39.56	7B	1M	
Grant	Laborers	Railroad Equipment, Power Driven, Except Dual Mobile	$39.56	7B	1M	
Grant	Laborers	Railroad Power Spiker Or Puller, Dual Mobile	$39.56	7B	1M	
Grant	Laborers	Remote Equipment Operator	$40.11	7B	1M	
Grant	Laborers	Remote Equipment Operator (i.e. Compaction And Demolition)	$39.56	7B	1M	
Grant	Laborers	Rigger/signal Person	$39.56	7B	1M	
Grant	Laborers	Riprap Person	$39.29	7B	1M	
Grant	Laborers	Rodder & Spreader	$39.56	7B	1M	
Grant	Laborers	Sandblast Tailhoseman	$39.29	7B	1M	
Grant	Laborers	Scaffold Erector, Wood Or Steel	$39.29	7B	1M	
Grant	Laborers	Stake Jumper	$39.29	7B	1M	
Grant	Laborers	Structural Mover	$39.29	7B	1M	
Grant	Laborers	Tailhoseman (water Nozzle)	$39.29	7B	1M	
Grant	Laborers	Timber Bucker & Faller (by Hand)	$39.29	7B	1M	
Grant	Laborers	Track Laborer (rr)	$39.29	7B	1M	
Grant	Laborers	Traffic Control Laborer	$37.19	7B	1M	8T
Grant	Laborers	Traffic Control Supervisor	$38.19	7B	1M	8S
Grant	Laborers	Trencher, Shawnee	$39.56	7B	1M	
Grant	Laborers	Trenchless Technology Technician	$39.83	7B	1M	
Grant	Laborers	Truck Loader	$39.29	7B	1M	
Grant	Laborers	Tugger Operator	$39.56	7B	1M	
Grant	Laborers	Vibrators, All	$39.83	7B	1M	
Grant	Laborers	Wagon Drills	$39.56	7B	1M	
Grant	Laborers	Water Pipe Liner	$39.56	7B	1M	
Grant	Laborers	Welder, Electric, Manual Or Automatic (hdpe Or Similar Pipe And Liner)	$40.11	7B	1M	
Grant	Laborers	Well-point Person	$39.29	7B	1M	
Grant	Laborers	Wheelbarrow, Power Driven	$39.56	7B	1M	
Grant	Power Equipment Operators	A-frame Truck (2 Or More Drums)	$44.39	7B	1M	8D
Grant	Power Equipment Operators	A-frame Truck (single Drum)	$43.78	7B	1M	8D
Grant	Power Equipment Operators	Asphalt Plant Operator	$44.99	7B	1M	8D
Grant	Power Equipment Operators	Assistant Plant Operator, Fireman Or Pugmixer (asphalt)	$43.78	7B	1M	8D
Grant	Power Equipment Operators	Assistant Refrigeration Plant & Chiller Operator (over 1000 Ton)	$44.39	7B	1M	8D
Grant	Power Equipment Operators	Assistant Refrigeration Plant (under 1000 Ton)	$43.78	7B	1M	8D

INFORMATIONAL COPY ONLY - NOT FOR BIDDING

Grant	Power Equipment Operators	Automatic Subgrader (ditches & Trimmers)	$44.99	7B	1M	8D
Grant	Power Equipment Operators	Backfillers (cleveland & Similar)	$44.39	7B	1M	8D
Grant	Power Equipment Operators	Backhoe & Hoe Ram (under 3/4 Yd.)	$44.71	7B	1M	8D
Grant	Power Equipment Operators	Backhoe (45,000 Gw & Under)	$44.71	7B	1M	8D
Grant	Power Equipment Operators	Backhoe (45,000 Gw To 110,000 Gw)	$44.99	7B	1M	8D
Grant	Power Equipment Operators	Backhoe (over 110,000 Gw)	$45.26	7B	1M	8D
Grant	Power Equipment Operators	Backhoes & Hoe Ram (3 Yds & Over)	$45.26	7B	1M	8D
Grant	Power Equipment Operators	Backhoes & Hoe Ram (3/4 Yd. To 3 Yd.)	$44.99	7B	1M	8D
Grant	Power Equipment Operators	Bagley Or Stationary Scraper	$43.78	7B	1M	8D
Grant	Power Equipment Operators	Batch & Wet Mix Operator (multiple Units, 2 & Incl. 4)	$44.99	7B	1M	8D
Grant	Power Equipment Operators	Batch Plant & Wet Mix Operator, Single Unit (concrete)	$44.39	7B	1M	8D
Grant	Power Equipment Operators	Batch Plant (over 4 Units)	$44.99	7B	1M	8D
Grant	Power Equipment Operators	Belt Finishing Machine	$43.78	7B	1M	8D
Grant	Power Equipment Operators	Belt Loader (kocal Or Similar)	$44.39	7B	1M	8D
Grant	Power Equipment Operators	Belt-crete Conveyors With Power Pack Or Similar	$44.39	7B	1M	8D
Grant	Power Equipment Operators	Bending Machine	$44.39	7B	1M	8D
Grant	Power Equipment Operators	Bit Grinders	$43.46	7B	1M	8D
Grant	Power Equipment Operators	Blade (finish & Bluetop), Automatic, Cmi, Abc, Finish Athey & Huber & Similar When Used As Automatic	$45.26	7B	1M	8D
Grant	Power Equipment Operators	Blade Operator (motor Patrol & Attachments)	$44.99	7B	1M	8D
Grant	Power Equipment Operators	Blower Operator (cement)	$43.78	7B	1M	8D
Grant	Power Equipment Operators	Boat Operator	$43.46	7B	1M	8D
Grant	Power Equipment Operators	Bob Cat (skid Steer)	$44.39	7B	1M	8D
Grant	Power Equipment Operators	Bolt Threading Machine	$43.46	7B	1M	8D
Grant	Power Equipment Operators	Boom Cats (side)	$44.99	7B	1M	8D
Grant	Power Equipment Operators	Boring Machine (earth)	$44.39	7B	1M	8D
Grant	Power Equipment Operators	Boring Machine (Rock Under 8 inch Bit - Quarry Master, Joy Or Similar)	$44.39	7B	1M	8D
Grant	Power Equipment Operators	Bump Cutter (wayne, Saginau Or Similar)	$44.39	7B	1M	8D
Grant	Power Equipment Operators	Cableway Controller (dispatcher)	$44.99	7B	1M	8D
Grant	Power Equipment Operators	Cableway Operators	$45.26	7B	1M	8D
Grant	Power Equipment Operators	Canal Lining Machine (concrete)	$44.39	7B	1M	8D

INFORMATIONAL COPY ONLY - NOT FOR BIDDING

Grant	Power Equipment Operators	Carrydeck & Boom Truck (under 25 Tons)	$44.71	7B	1M	8D
Grant	Power Equipment Operators	Cement Hog	$43.78	7B	1M	8D
Grant	Power Equipment Operators	Chipper (without Crane) Cleaning & Doping Machine (pipeline)	$44.39	7B	1M	8D
Grant	Power Equipment Operators	Clamshell, Dragline	$46.36	7B	1M	8D
Grant	Power Equipment Operators	Compactor (self-propelled With Blade)	$44.99	7B	1M	8D
Grant	Power Equipment Operators	Compressor (2000 Cfm Or Over, 2 Or More, Gas Diesel Or Electric Power)	$43.78	7B	1M	8D
Grant	Power Equipment Operators	Compressors (under 2000 Cfm, Gas, Diesel Or Electric Power)	$43.46	7B	1M	8D
Grant	Power Equipment Operators	Concrete Cleaning / Decontamination Machine Operator	$45.26	7B	1M	8D
Grant	Power Equipment Operators	Concrete Pump Boon Truck	$44.99	7B	1M	8D
Grant	Power Equipment Operators	Concrete Pumps (squeeze-crete, Flow-crete, Whitman & Similar)	$44.55	7B	1M	8D
Grant	Power Equipment Operators	Concrete Saw (multiple Cut)	$43.78	7B	1M	8D
Grant	Power Equipment Operators	Concrete Slip Form Paver	$44.99	7B	1M	8D
Grant	Power Equipment Operators	Conveyor Aggregate Delivery Systems (c.a.d.)	$44.99	7B	1M	8D
Grant	Power Equipment Operators	Crane Oiler- Driver (cdl Required) & Cable Tender, Mucking Machine	$43.46	7B	1M	8D
Grant	Power Equipment Operators	Cranes (25 Tons & Under), All Attachments Incl. Clamshell, Dragline	$44.71	7B	1M	8D
Grant	Power Equipment Operators	Cranes (25 Tons To And Including 45 Tons), All Attachments Incl. Clamshell, Dragline	$44.99	7B	1M	8D
Grant	Power Equipment Operators	Cranes (45 Tons To 85 Tons), All Attachments Incl. Clamshell And Dragline	$45.26	7B	1M	8D
Grant	Power Equipment Operators	Cranes (85 Tons & Over) And All Climbing, Overhead, Rail & Tower. All Attachments Incl.	$46.36	7B	1M	8D
Grant	Power Equipment Operators	Crusher Feeder	$43.46	7B	1M	8D
Grant	Power Equipment Operators	Crusher, Grizzle & Screening Plant Operator	$44.99	7B	1M	8D
Grant	Power Equipment Operators	Curb Extruder (asphalt Or Concrete)	$44.55	7B	1M	8D
Grant	Power Equipment Operators	Deck Engineer	$44.39	7B	1M	8D
Grant	Power Equipment Operators	Deck Hand	$43.46	7B	1M	8D
Grant	Power Equipment Operators	Derricks & Stifflegs (65 Tons & Over)	$45.26	7B	1M	8D
Grant	Power Equipment Operators		$44.71	7B	1M	8D

INFORMATIONAL COPY ONLY - NOT FOR BIDDING

		Derricks & Stifflegs (under 65 Tons)				
Grant	Power Equipment Operators	Distributor Leverman	$43.78	7B	1M	8D
Grant	Power Equipment Operators	Ditch Witch Or Similar	$43.78	7B	1M	8D
Grant	Power Equipment Operators	Dope Pots (power Agitated	$43.78	7B	1M	8D
Grant	Power Equipment Operators	Dozer / Tractor (up To D-6 Or Equivalent) And Traxcavator	$44.39	7B	1M	8D
Grant	Power Equipment Operators	Dozer / Tractors (d-6 & Equivalent & Over)	$44.99	7B	1M	8D
Grant	Power Equipment Operators	Dozer, 834 R/t & Similar	$44.99	7B	1M	8D
Grant	Power Equipment Operators	Drill Doctor	$44.99	7B	1M	8D
Grant	Power Equipment Operators	Driller Licensed	$46.36	7B	1M	8D
Grant	Power Equipment Operators	Drillers Helper	$43.46	7B	1M	8D
Grant	Power Equipment Operators	Drilling Equipment (8 inch Bit & Over - Robbins, Reverse Circulation & Similar)	$44.71	7B	1M	8D
Grant	Power Equipment Operators	Drills (churn, Core, Calyx Or Diamond)	$44.55	7B	1M	8D
Grant	Power Equipment Operators	Elevating Belt (holland Type)	$45.26	7B	1M	8D
Grant	Power Equipment Operators	Elevating Belt-type Loader (euclid, Barber Green & Similar)	$44.39	7B	1M	8D
Grant	Power Equipment Operators	Elevating Grader-type Loader (dumor, Adams Or Similar)	$44.39	7B	1M	8D
Grant	Power Equipment Operators	Elevator Hoisting Materials	$43.78	7B	1M	8D
Grant	Power Equipment Operators	Equipment Serviceman, Greaser & Oiler	$44.55	7B	1M	8D
Grant	Power Equipment Operators	Fireman & Heater Tender	$43.46	7B	1M	8D
Grant	Power Equipment Operators	Fork Lift Or Lumber Stacker, Hydra-life & Similar	$43.78	7B	1M	8D
Grant	Power Equipment Operators	Generator Plant Engineers (diesel Or Electric)	$44.39	7B	1M	8D
Grant	Power Equipment Operators	Gin Trucks (pipeline)	$43.78	7B	1M	8D
Grant	Power Equipment Operators	Grade Checker	$44.71	7B	1M	8D
Grant	Power Equipment Operators	Gunite Combination Mixer & Compressor	$44.39	7B	1M	8D
Grant	Power Equipment Operators	H.d. Mechanic	$45.26	7B	1M	8D
Grant	Power Equipment Operators	H.d. Welder	$45.26	7B	1M	8D
Grant	Power Equipment Operators	Heavy Equipment Robotics Operator	$45.26	7B	1M	8D
Grant	Power Equipment Operators	Helicopter Pilot	$46.36	7B	1M	8D
Grant	Power Equipment Operators	Helper, Mechanic Or Welder, H.D	$43.46	7B	1M	8D
Grant	Power Equipment Operators	Hoe Ram	$44.71	7B	1M	8D
Grant	Power Equipment Operators	Hoist (2 Or More Drums Or Tower Hoist)	$44.55	7B	1M	8D
Grant	Power Equipment Operators	Hoist, Single Drum	$43.78	7B	1M	8D
Grant	Power Equipment Operators		$45.26	7B	1M	8D

INFORMATIONAL COPY ONLY - NOT FOR BIDDING

		Hydraulic Platform Trailers (goldhofer, Shaurerly And Similar)				
Grant	Power Equipment Operators	Hydro-seeder, Mulcher, Nozzleman	$43.46	7B	1M	8D
Grant	Power Equipment Operators	Lime Batch Tank Operator (recycle Train)	$44.99	7B	1M	8D
Grant	Power Equipment Operators	Lime Brain Operator (recycle Train)	$44.99	7B	1M	8D
Grant	Power Equipment Operators	Loader (360 Degrees Revolving Koehring Scooper Or Similar)	$45.26	7B	1M	8D
Grant	Power Equipment Operators	Loader Operator (front-end & Overhead, 4 Yds. Incl. 8 Yds.)	$44.99	7B	1M	8D
Grant	Power Equipment Operators	Loaders (bucket Elevators And Conveyors)	$43.78	7B	1M	8D
Grant	Power Equipment Operators	Loaders (overhead & Front-end, Over 8 Yds. To 10 Yds.)	$45.26	7B	1M	8D
Grant	Power Equipment Operators	Loaders (overhead & Front-end, Under 4 Yds.. R/t)	$44.55	7B	1M	8D
Grant	Power Equipment Operators	Loaders (overhead And Front-end, 10 Yds. & Over)	$46.36	7B	1M	8D
Grant	Power Equipment Operators	Locomotive Engineer	$44.39	7B	1M	8D
Grant	Power Equipment Operators	Longitudinal Float	$43.78	7B	1M	8D
Grant	Power Equipment Operators	Master Environmental Maintenance Technician	$45.26	7B	1M	8D
Grant	Power Equipment Operators	Mixer (portable - Concrete)	$43.78	7B	1M	8D
Grant	Power Equipment Operators	Mixermobile	$44.39	7B	1M	8D
Grant	Power Equipment Operators	Mobile Crusher Operator (recycle Train)	$44.99	7B	1M	8D
Grant	Power Equipment Operators	Mucking Machine	$44.39	7B	1M	8D
Grant	Power Equipment Operators	Multiple Dozer Units With Single Blade	$44.99	7B	1M	8D
Grant	Power Equipment Operators	Pavement Breaker, Hydra-hammer & Similar	$43.78	7B	1M	8D
Grant	Power Equipment Operators	Paving (dual Drum)	$44.71	7B	1M	8D
Grant	Power Equipment Operators	Paving Machine (asphalt And Concrete)	$44.99	7B	1M	8D
Grant	Power Equipment Operators	Piledriving Engineers	$44.71	7B	1M	8D
Grant	Power Equipment Operators	Plant Oiler	$43.46	7B	1M	8D
Grant	Power Equipment Operators	Posthole Auger Or Punch	$44.39	7B	1M	8D
Grant	Power Equipment Operators	Power Broom	$43.78	7B	1M	8D
Grant	Power Equipment Operators	Pump (grout Or Jet)	$44.39	7B	1M	8D
Grant	Power Equipment Operators	Pumpman	$43.46	7B	1M	8D
Grant	Power Equipment Operators	Quad-track Or Similar Equipment	$44.99	7B	1M	8D
Grant	Power Equipment Operators	Railroad Ballast Regulation Operator (self-propelled)	$43.78	7B	1M	8D
Grant	Power Equipment Operators	Railroad Power Tamper Operator (self-propelled)	$43.78	7B	1M	8D
Grant	Power Equipment Operators		$43.78	7B	1M	8D

INFORMATIONAL COPY ONLY - NOT FOR BIDDING

		Railroad Tamper Jack Operator (self-propelled)				
Grant	Power Equipment Operators	Railroad Track Liner Operator (self-propelled)	$44.71	7B	1M	8D
Grant	Power Equipment Operators	Refrigeration Plant Engineer (1000 Tons & Over)	$44.71	7B	1M	8D
Grant	Power Equipment Operators	Refrigeration Plant Engineer (under 1000 Ton)	$44.55	7B	1M	8D
Grant	Power Equipment Operators	Rollerman (finishing Asphalt Pavement)	$44.99	7B	1M	8D
Grant	Power Equipment Operators	Rollers, All Types On Subgrade, Including Seal And Chip Coating (farm Type, Case, John Deere And Similar,or Compacting Vibrator), Except When Pulled B	$43.46	7B	1M	8D
Grant	Power Equipment Operators	Roto Mill (pavement Grinder)	$44.99	7B	1M	8D
Grant	Power Equipment Operators	Rotomill Groundsman	$44.55	7B	1M	8D
Grant	Power Equipment Operators	Rubber-tired Scrapers (multiple Engine With Three Or More Scrapers)	$45.26	7B	1M	8D
Grant	Power Equipment Operators	Rubber-tired Skidders (r/t With Or Without Attachments)	$44.55	7B	1M	8D
Grant	Power Equipment Operators	Scrapers, All, Rubber-tired	$44.99	7B	1M	8D
Grant	Power Equipment Operators	Screed Operator	$44.99	7B	1M	8D
Grant	Power Equipment Operators	Shovels (3 Yds. & Over)	$45.26	7B	1M	8D
Grant	Power Equipment Operators	Shovels (under 3 Yds.)	$44.99	7B	1M	8D
Grant	Power Equipment Operators	Signalman (whirleys, Highline, Hammerheads Or Similar)	$44.71	7B	1M	8D
Grant	Power Equipment Operators	Soil Stabilizer (p & H Or Similar)	$44.39	7B	1M	8D
Grant	Power Equipment Operators	Spray Curing Machine (concrete)	$43.78	7B	1M	8D
Grant	Power Equipment Operators	Spreader Box (self-propelled)	$43.78	7B	1M	8D
Grant	Power Equipment Operators	Spreader Machine	$44.39	7B	1M	8D
Grant	Power Equipment Operators	Steam Cleaner	$43.46	7B	1M	8D
Grant	Power Equipment Operators	Straddle Buggy (ross & Similar On Construction Job Only)	$43.78	7B	1M	8D
Grant	Power Equipment Operators	Surface Heater & Planer Machine	$44.55	7B	1M	8D
Grant	Power Equipment Operators	Tractor (farm Type R/t With Attachments, Except Backhoe)	$43.78	7B	1M	8D
Grant	Power Equipment Operators	Traverse Finish Machine	$44.39	7B	1M	8D
Grant	Power Equipment Operators	Trenching Machines (7 Ft. Depth & Over)	$44.99	7B	1M	8D
Grant	Power Equipment Operators	Trenching Machines (under 7 Ft. Depth Capacity)	$44.55	7B	1M	8D
Grant	Power Equipment Operators	Tug Boat Operator	$44.99	7B	1M	8D
Grant	Power Equipment Operators	Tugger Operator	$43.78	7B	1M	8D

INFORMATIONAL COPY ONLY - NOT FOR BIDDING

Grant	Power Equipment Operators	Turnhead (with Re-screening)	$44.55	7B	1M	8D
Grant	Power Equipment Operators	Turnhead Operator	$44.39	7B	1M	8D
Grant	Power Equipment Operators	Ultra High Pressure Wateriet Cutting Tool System Operator, (30,000 Psi)	$45.26	7B	1M	8D
Grant	Power Equipment Operators	Vactor Guzzler, Super Sucker	$44.99	7B	1M	8D
Grant	Power Equipment Operators	Vacuum Blasting Machine Operator	$45.26	7B	1M	8D
Grant	Power Equipment Operators	Vacuum Drill (reverse Circulation Drill Under 8" Bit)	$44.55	7B	1M	8D
Grant	Power Equipment Operators	Welding Machine	$43.46	7B	1M	8D
Grant	Power Equipment Operators	Whirleys & Hammerheads, All	$45.26	7B	1M	8D
Grant	Surveyors	All Classifications	$28.57	0	1	
Grant	Truck Drivers	Asphalt Mix Over 20 Yards	$44.69	5D	1V	8M
Grant	Truck Drivers	Asphalt Mix To 20 Yards	$44.52	5D	1V	8M
Grant	Truck Drivers	Dump Truck	$44.52	5D	1V	8M
Grant	Truck Drivers	Dump Truck & Trailer	$44.69	5D	1V	8M
Grant	Truck Drivers	Other Trucks	$44.41	5D	1V	8M

INFORMATIONAL COPY ONLY - NOT FOR BIDDING

****

Overtime Codes

Overtime calculations are based on the hourly rate actually paid to the worker. On public works projects, the hourly rate must be not less than the prevailing rate of wage minus the hourly rate of the cost of fringe benefits actually provided for the worker.

1. ALL HOURS WORKED IN EXCESS OF EIGHT (8) HOURS PER DAY OR FORTY (40) HOURS PER WEEK SHALL BE PAID AT ONE AND ONE-HALF TIMES THE HOURLY RATE OF WAGE.

B. All hours worked on Saturdays shall be paid at one and one-half times the hourly rate of wage. All hours worked on Sundays and holidays shall be paid at double the hourly rate of wage.

C. The first two (2) hours after eight (8) regular hours Monday through Friday and the first ten (10) hours on Saturday shall be paid at one and one-half times the hourly rate of wage. All other overtime hours and all hours worked on Sundays and holidays shall be paid at double the hourly rate of wage.

D. The first two (2) hours before or after a five-eight (8) hour workweek day or a four-ten (10) hour workweek day and the first eight (8) hours worked the next day after either workweek shall be paid at one and one-half times the hourly rate of wage. All additional hours worked and all worked on Sundays and holidays shall be paid at double the hourly rate of wage.

E. The first two (2) hours after eight (8) regular hours Monday through Friday and the first eight (8) hours on Saturday shall be paid at one and one-half times the hourly rate of wage. All other hours worked Monday through Saturday, and all hours worked on Sundays and holidays shall be paid at double the hourly rate of wage.

F. The first two (2) hours after eight (8) regular hours Monday through Friday and the first ten (10) hours on Saturday shall be paid at one and one-half times the hourly rate of wage. All other overtime hours worked, except Labor Day, shall be paid at double the hourly rate of wage. All hours worked on Labor Day shall be paid at three times the hourly rate of wage.

G. The first ten (10) hours worked on Saturdays and the first ten (10) hours worked on a fifth calendar weekday in a four-ten hour schedule, shall be paid at one and one-half times the hourly rate of wage. All hours worked in excess of ten (10) hours per day Monday through Saturday and all hours worked on Sundays and holidays shall be paid at double the hourly rate of wage.

H. All hours worked on Saturdays (except makeup days if work is lost due to inclement weather conditions or equipment breakdown) shall be paid at one and one-half times the hourly rate of wage. All hours worked Monday through Saturday over twelve (12) hours and all hours worked on Sundays and holidays shall be paid at double the hourly rate of wage.

I. All hours worked on Sundays and holidays shall also be paid at double the hourly rate of wage.

J. The first two (2) hours after eight (8) regular hours Monday through Friday and the first ten (10) hours on Saturday shall be paid at one and one-half times the hourly rate of wage. All hours worked over ten (10) hours Monday through Saturday, Sundays and holidays shall be paid at double the hourly rate of wage.

K. All hours worked on Saturdays and Sundays shall be paid at one and one-half times the hourly rate of wage. All hours worked on holidays shall be paid at double the hourly rate of wage.

M. All hours worked on Saturdays (except makeup days if work is lost due to inclement weather conditions) shall be paid at one and one-half times the hourly rate of wage. All hours worked on Sundays and holidays shall be paid at double the hourly rate of wage.

N. All hours worked on Saturdays (except makeup days) shall be paid at one and one-half times the hourly rate of wage. All hours worked on Sundays and holidays shall be paid at double the hourly rate of wage.

INFORMATIONAL COPY ONLY – NOT FOR BIDDING

Overtime Codes Continued

1. O. The first ten (10) hours worked on Saturday shall be paid at one and one-half times the hourly rate of wage. All hours worked on Sundays, holidays and after twelve (12) hours, Monday through Friday and after ten (10) hours on Saturday shall be paid at double the hourly rate of wage.

P. All hours worked on Saturdays (except makeup days if circumstances warrant) and Sundays shall be paid at one and one-half times the hourly rate of wage. All hours worked on holidays shall be paid at double the hourly rate of wage.

Q. The first two (2) hours after eight (8) regular hours Monday through Friday and up to ten (10) hours worked on Saturdays shall be paid at one and one-half times the hourly rate of wage. All hours worked in excess of ten (10) hours per day Monday through Saturday and all hours worked on Sundays and holidays (except Christmas day) shall be paid at double the hourly rate of wage. All hours worked on Christmas day shall be paid at two and one-half times the hourly rate of wage.

R. All hours worked on Sundays and holidays shall be paid at two times the hourly rate of wage.

S. The first two (2) hours after eight (8) regular hours Monday through Friday and the first eight (8) hours on Saturday shall be paid at one and one-half times the hourly rate of wage. All hours worked on holidays and all other overtime hours worked, except Labor Day, shall be paid at double the hourly rate of wage. All hours worked on Labor Day shall be paid at three times the hourly rate of wage.

U. All hours worked on Saturdays shall be paid at one and one-half times the hourly rate of wage. All hours worked on Sundays and holidays (except Labor Day) shall be paid at two times the hourly rate of wage. All hours worked on Labor Day shall be paid at three times the hourly rate of wage.

V. All hours worked on Sundays and holidays (except Thanksgiving Day and Christmas day) shall be paid at one and one-half times the hourly rate of wage. All hours worked on Thanksgiving Day and Christmas day shall be paid at double the hourly rate of wage.

W. All hours worked on Saturdays and Sundays (except make-up days due to conditions beyond the control of the employer)) shall be paid at one and one-half times the hourly rate of wage. All hours worked on holidays shall be paid at double the hourly rate of wage.

X. The first four (4) hours after eight (8) regular hours Monday through Friday and the first twelve (12) hours on Saturday shall be paid at one and one-half times the hourly rate of wage. All hours worked over twelve (12) hours Monday through Saturday, Sundays and holidays shall be paid at double the hourly rate of wage. When holiday falls on Saturday or Sunday, the day before Saturday, Friday, and the day after Sunday, Monday, shall be considered the holiday and all work performed shall be paid at double the hourly rate of wage.

Y. All hours worked outside the hours of 5:00 am and 5:00 pm (or such other hours as may be agreed upon by any employer and the employee) and all hours worked in excess of eight (8) hours per day (10 hours per day for a 4 x 10 workweek) and on Saturdays and holidays (except labor day) shall be paid at one and one-half times the hourly rate of wage. (except for employees who are absent from work without prior approval on a scheduled workday during the workweek shall be paid at the straight-time rate until they have worked 8 hours in a day (10 in a 4 x 10 workweek) or 40 hours during that workweek.) All hours worked Monday through Saturday over twelve (12) hours and all hours worked on Sundays and Labor Day shall be paid at double the hourly rate of wage.

Z. All hours worked on Saturdays and Sundays shall be paid at one and one-half times the hourly rate of wage. All hours worked on holidays shall be paid the straight time rate of pay in addition to holiday pay.

INFORMATIONAL COPY ONLY - NOT FOR BIDDING

Overtime Codes Continued

2. ALL HOURS WORKED IN EXCESS OF EIGHT (8) HOURS PER DAY OR FORTY (40) HOURS PER WEEK SHALL BE PAID AT ONE AND ONE-HALF TIMES THE HOURLY RATE OF WAGE.

B. All hours worked on holidays shall be paid at one and one-half times the hourly rate of wage.

C. All hours worked on Sundays shall be paid at one and one-half times the hourly rate of wage. All hours worked on holidays shall be paid at two times the hourly rate of wage.

F. The first eight (8) hours worked on holidays shall be paid at the straight hourly rate of wage in addition to the holiday pay. All hours worked in excess of eight (8) hours on holidays shall be paid at double the hourly rate of wage.

G. All hours worked on Sunday shall be paid at two times the hourly rate of wage. All hours worked on paid holidays shall be paid at two and one-half times the hourly rate of wage including holiday pay.

H. All hours worked on Sunday shall be paid at two times the hourly rate of wage. All hours worked on holidays shall be paid at one and one-half times the hourly rate of wage.

O. All hours worked on Sundays and holidays shall be paid at one and one-half times the hourly rate of wage.

R. All hours worked on Sundays and holidays and all hours worked over sixty (60) in one week shall be paid at double the hourly rate of wage.

U. All hours worked on Saturdays shall be paid at one and one-half times the hourly rate of wage. All hours worked over 12 hours in a day or on Sundays and holidays shall be paid at double the hourly rate of wage.

W. The first two (2) hours after eight (8) regular hours Monday through Friday and the first eight (8) hours on Saturday shall be paid at one and one-half times the hourly rate of wage. All other hours worked Monday through Saturday, and all hours worked on Sundays and holidays shall be paid at double the hourly rate of wage. On a four-day, ten-hour weekly schedule, either Monday thru Thursday or Tuesday thru Friday schedule, all hours worked after ten shall be paid at double the hourly rate of wage. The first eight (8) hours worked on the fifth day shall be paid at one and one-half times the hourly rate of wage. All other hours worked on the fifth, sixth, and seventh days and on holidays shall be paid at double the hourly rate of wage.

3. ALL HOURS WORKED IN EXCESS OF EIGHT (8) HOURS PER DAY OR FORTY (40) HOURS PER WEEK SHALL BE PAID AT ONE AND ONE-HALF TIMES THE HOURLY RATE OF WAGE.

A. Work performed in excess of eight (8) hours of straight time per day, or ten (10) hours of straight time per day when four ten (10) hour shifts are established, or forty (40) hours of straight time per week, Monday through Friday, or outside the normal shift, and all work on Saturdays shall be paid at time and one-half the straight time rate. Hours worked over twelve hours (12) in a single shift and all work performed after 6:00 pm Saturday to 6:00 am Monday and holidays shall be paid at double the straight time rate of pay. Any shift starting between the hours of 6:00 pm and midnight shall receive an additional one dollar ($1.00) per hour for all hours worked that shift. The employer shall have the sole discretion to assign overtime work to employees. Primary consideration for overtime work shall be given to employees regularly assigned to the work to be performed on overtime situations. After an employee has worked eight (8) hours at an applicable overtime rate, all additional hours shall be at the applicable overtime rate until such time as the employee has had a break of eight (8) hours or more.

C. Work performed in excess of eight (8) hours of straight time per day, or ten (10) hours of straight time per day when four ten (10) hour shifts are established, or forty (40) hours of straight time per week, Monday through Friday, or outside the normal shift, and all work on Saturdays shall be paid at one and one-half times the hourly rate of wage. All work performed after 6:00 pm Saturday to 5:00 am Monday and Holidays shall be paid at double the hourly rate of wage. After an employee has worked eight (8) hours at an applicable overtime rate, all additional hours shall be at the applicable overtime rate until such time as the employee has had a break of eight (8) hours or more.

INFORMATIONAL COPY ONLY - NOT FOR BIDDING

Overtime Codes Continued

3. E. All hours worked Sundays and holidays shall be paid at double the hourly rate of wage. Each week, once 40 hours of straight time work is achieved, then any hours worked over 10 hours per day Monday through Saturday shall be paid at double the hourly wage rate.

F. All hours worked on Saturday shall be paid at one and one-half times the hourly rate of wage. All hours worked on Sunday shall be paid at two times the hourly rate of wage. All hours worked on paid holidays shall be paid at two and one-half times the hourly rate of wage including holiday pay.

H. All work performed on Sundays between March 16th and October 14th and all Holidays shall be compensated for at two (2) times the regular rate of pay. Work performed on Sundays between October 15th and March 15th shall be compensated at one and one half (1-1/2) times the regular rate of pay.

I. All hours worked on Saturdays shall be paid at one and one-half times the hourly rate of wage. In the event the job is down due to weather conditions during a five day work week (Monday through Friday,) or a four day-ten hour work week (Tuesday through Friday,) then Saturday may be worked as a voluntary make-up day at the straight time rate. However, Saturday shall not be utilized as a make-up day when a holiday falls on Friday. All hours worked Monday through Saturday over twelve (12) hours and all hours worked on Sundays and holidays shall be paid at double the hourly rate of wage.

J. All hours worked between the hours of 10:00 pm and 5:00 am, Monday through Friday, and all hours worked on Saturdays shall be paid at a one and one-half times the hourly rate of wage. All hours worked on Sundays and holidays shall be paid at double the hourly rate of wage.

K. Work performed in excess of eight (8) hours of straight time per day, or ten (10) hours of straight time per day when four ten (10) hour shifts are established, or forty (40) hours of straight time per week, Monday through Friday, or outside the normal 5 am to 6pm shift, and all work on Saturdays shall be paid at one and one-half times the hourly rate of wage. All work performed after 6:00 pm Saturday to 5:00 am Monday and Holidays, and all hours worked in excess of twelve (12) hours in a single shift shall be paid at double the hourly rate of wage.

After an employee has worked eight (8) hours at an applicable overtime rate, all additional hours shall be at the applicable overtime rate until such time as the employee has had a break of eight (8) hours or more. When an employee returns to work without at least eight (8) hours time off since their previous shift, all such time shall be a continuation of shift and paid at the applicable overtime rate until he/she shall have the eight (8) hours rest period.

4. ALL HOURS WORKED IN EXCESS OF EIGHT (8) HOURS PER DAY OR FORTY (40) HOURS PER WEEK SHALL BE PAID AT ONE AND ONE-HALF TIMES THE HOURLY RATE OF WAGE.

A. All hours worked in excess of eight (8) hours per day or forty (40) hours per week shall be paid at double the hourly rate of wage. All hours worked on Saturdays, Sundays and holidays shall be paid at double the hourly rate of wage.

B. All hours worked over twelve (12) hours per day and all hours worked on holidays shall be paid at double the hourly rate of wage.

C. On Monday through Friday, the first four (4) hours of overtime after eight (8) hours of straight time work shall be paid at one and one half (1-1/2) times the straight time rate of pay, unless a four (4) day ten (10) hour workweek has been established. On a four (4) day ten (10) hour workweek scheduled Monday through Thursday, or Tuesday through Friday, the first two (2) hours of overtime after ten (10) hours of straight time work shall be paid at one and one half (1-1/2) times the straight time rate of pay. On Saturday, the first twelve (12) hours of work shall be paid at one and one half (1-1/2) times the straight time rate of pay, except that if the job is down on Monday through Friday due to weather conditions or other conditions outside the control of the employer, the first ten (10) hours on Saturday may be worked at the straight time rate of pay. All hours worked over twelve (12) hours in a day and all hours worked on Sunday and Holidays shall be paid at two (2) times the straight time rate of pay.

INFORMATIONAL COPY ONLY - NOT FOR BIDDING

Overtime Codes Continued

4. D. All hours worked in excess of eight (8) hours per day or forty (40) hours per week shall be paid at double the hourly rate of wage. All hours worked on Saturday, Sundays and holidays shall be paid at double the hourly rate of pay. Rates include all members of the assigned crew.

EXCEPTION:
On all multipole structures and steel transmission lines, switching stations, regulating, capacitor stations, generating plants, industrial plants, associated installations and substations, except those substations whose primary function is to feed a distribution system, will be paid overtime under the following rates:

The first two (2) hours after eight (8) regular hours Monday through Friday of overtime on a regular workday, shall be paid at one and one-half times the hourly rate of wage. All hours in excess of ten (10) hours will be at two (2) times the hourly rate of wage. The first eight (8) hours worked on Saturday will be paid at one and one-half (1-1/2) times the hourly rate of wage. All hours worked in excess of eight (8) hours on Saturday, and all hours worked on Sundays and holidays will be at the double the hourly rate of wage.

All overtime eligible hours performed on the above described work that is energized, shall be paid at the double the hourly rate of wage.

E. The first two (2) hours after eight (8) regular hours Monday through Friday and the first eight (8) hours on Saturday shall be paid at one and one-half times the hourly rate of wage. All other hours worked Monday through Saturday, and all hours worked on Sundays and holidays shall be paid at double the hourly rate of wage.

On a four-day, ten-hour weekly schedule, either Monday thru Thursday or Tuesday thru Friday schedule, all hours worked after ten shall be paid at double the hourly rate of wage. The Monday or Friday not utilized in the normal four-day, ten hour work week, and Saturday shall be paid at one and one half (1½) times the regular shift rate for the first eight (8) hours. All other hours worked Monday through Saturday, and all hours worked on Sundays and holidays shall be paid at double the hourly rate of wage.

F. All hours worked between the hours of 6:00 pm and 6:00 am, Monday through Saturday, shall be paid at a premium rate of 20% over the hourly rate of wage. All hours worked on Sundays shall be paid at one and one-half times the hourly rate of wage. All hours worked on holidays shall be paid at double the hourly rate of wage.

G. All hours worked on Saturdays shall be paid at one and one-half times the hourly rate of wage. All hours worked Monday through Saturday over twelve (12) hours and all hours worked on Sundays and holidays shall be paid at double the hourly rate of wage.

H. The first two (2) hours after eight (8) regular hours Monday through Friday and the first eight (8) hours on Saturday shall be paid at one and one-half times the hourly rate of wage. All other overtime hours worked, except Labor Day, and all hours on Sunday shall be paid at double the hourly rate of wage. All hours worked on Labor Day shall be paid at three times the hourly rate of wage.

I. The First eight (8) hours worked on Saturdays shall be paid at one and one-half times the hourly rate of wage. All hours worked in excess of eight (8) per day on Saturdays shall be paid at double the hourly rate of wage. All hours worked on Sundays and holidays shall be paid at double the hourly rate of wage.

J. The first eight (8) hours worked on a Saturday shall be paid at one and one-half times the hourly rate of wage. All hours worked in excess of eight (8) hours on a Saturday shall be paid at double the hourly rate of wage. All hours worked over twelve (12) in a day, and all hours worked on Sundays and Holidays shall be paid at double the hourly rate of wage.

K. All hours worked on a Saturday shall be paid at one and one-half times the hourly rate of wage, so long as Saturday is the sixth consecutive day worked. All hours worked over twelve (12) in a day Monday through Saturday, and all hours worked on Sundays and Holidays shall be paid at double the hourly rate of wage.

INFORMATIONAL COPY ONLY - NOT FOR BIDDING

4. L. The first twelve (12) hours worked on a Saturday shall be paid at one and one-half times the hourly rate of wage. All hours worked on a Saturday in excess of twelve (12) hours shall be paid at double the hourly rate of pay. All hours worked over twelve (12) in a day Monday through Friday, and all hours worked on Sundays shall be paid at double the hourly rate of wage. All hours worked on a holiday shall be paid at one and one-half times the hourly rate of wage, except that all hours worked on Labor Day shall be paid at double the hourly rate of pay.

M. All hours worked on Sunday and Holidays shall be paid at double the hourly rate. Any employee reporting to work less than nine (9) hours from their previous quitting time shall be paid for such time at time and one-half times the hourly rate.

N. All hours worked on Saturdays shall be paid at one and one-half times the hourly rate of wage. All hours worked on Sundays and holidays, and all work performed between the hours of midnight (12:00 AM) and eight AM (8:00 AM) every day shall be paid at double the hourly rate of wage.

O. All hours worked between midnight Friday to midnight Sunday shall be paid at one and one-half the hourly rate of wage. After an employee has worked in excess of eight (8) continuous hours in any one or more calendar days, all additional hours shall be at the applicable overtime rate until such time as the employee has had a break of six (6) hours or more. All hours worked on Holidays shall be paid at double the hourly rate of wage.

P. All hours worked on Holidays shall be paid at one and one-half times the hourly rate of wage.

Q. The first four (4) hours after eight (8) regular hours Monday through Friday and the first eight (8) hours on Saturday shall be paid at one and one-half times the hourly rate of wage. All hours worked over twelve (12) hours Monday through Saturday shall be paid at double the hourly rate. All hours worked on Sundays and holidays shall be paid at double the hourly rate of wage.

R. All hours worked on Saturdays shall be paid at one and one-half times the hourly rate of wage, so long as Saturday is the sixth consecutive day worked. All hours worked on Sundays and holidays shall be paid at double the hourly rate of wage.

S. All hours worked on Saturdays and Holidays shall be paid at one and one-half times the hourly rate of wage. All hours worked on Sundays shall be paid at double the hourly rate of wage.

T. The first two (2) hours of overtime for hours worked Monday-Friday shall be paid at one and one-half times the hourly rate of wage. All hours worked in excess of ten (10) hours per day shall be paid at double the hourly rate of wage. All hours worked on Sundays and holidays shall be paid at double the hourly rate of wage. For work on Saturday which is scheduled prior to the end of shift on Friday, the first six (6) hours work shall be paid at one and one-half times the hourly rate of wage, and all hours over (6) shall be paid double the hourly rate of wage. For work on Saturday which was assigned following the close of shift on Friday, all work shall be paid at double the hourly rate of wage.

U. The first four (4) hours after eight (8) regular hours Monday through Friday and the first twelve (12) hours on Saturday shall be paid at one and one-half times the hourly rate of wage. (Except on makeup days if work is lost due to inclement weather, then the first eight (8) hours on Saturday may be paid the regular rate.) All hours worked over twelve (12) hours Monday through Saturday, and all hours worked on Sundays and holidays shall be paid at double the hourly rate of wage.

INFORMATIONAL COPY ONLY - NOT FOR BIDDING

Holiday Codes

5. A. Holidays: New Year's Day, Memorial Day, Independence Day, Labor Day, Thanksgiving Day, Friday after Thanksgiving Day, and Christmas Day (7).

B. Holidays: New Year's Day, Memorial Day, Independence Day, Labor Day, Thanksgiving Day, Friday after Thanksgiving Day, the day before Christmas, and Christmas Day (8).

Holiday Codes Continued

5. C. Holidays: New Year's Day, Presidents' Day, Memorial Day, Independence Day, Labor Day, Thanksgiving Day, the Friday after Thanksgiving Day, And Christmas Day (8).

D. Holidays: New Year's Day, Memorial Day, Independence Day, Labor Day, Thanksgiving Day, the Friday and Saturday after Thanksgiving Day, And Christmas Day (8).

H. Holidays: New Year's Day, Memorial Day, Independence Day, Thanksgiving Day, the Day after Thanksgiving Day, And Christmas (6).

I. Holidays: New Year's Day, Memorial Day, Independence Day, Labor Day, Thanksgiving Day, and Christmas Day (6).

J. Holidays: New Year's Day, Memorial Day, Independence Day, Thanksgiving Day, Friday after Thanksgiving Day, Christmas Eve Day, And Christmas Day (7).

K. Holidays: New Year's Day, Presidents' Day, Memorial Day, Independence Day, Labor Day, Thanksgiving Day, Friday After Thanksgiving Day, The Day Before Christmas, And Christmas Day (9).

L. Holidays: New Year's Day, Martin Luther King Jr. Day, Memorial Day, Independence Day, Labor Day, Thanksgiving Day, Friday after Thanksgiving Day, And Christmas Day (8).

N. Holidays: New Year's Day, Presidents' Day, Memorial Day, Independence Day, Labor Day, Veterans' Day, Thanksgiving Day, The Friday After Thanksgiving Day, And Christmas Day (9).

P. Holidays: New Year's Day, Memorial Day, Independence Day, Labor Day, Thanksgiving Day, Friday And Saturday After Thanksgiving Day, The Day Before Christmas, And Christmas Day (9). If A Holiday Falls On Sunday, The Following Monday Shall Be Considered As A Holiday.

Q. Paid Holidays: New Year's Day, Memorial Day, Independence Day, Labor Day, Thanksgiving Day, and Christmas Day (6).

R. Paid Holidays: New Year's Day, Memorial Day, Independence Day, Labor Day, Thanksgiving Day, Day After Thanksgiving Day, One-Half Day Before Christmas Day, And Christmas Day. (7 1/2).

S. Paid Holidays: New Year's Day, Presidents' Day, Memorial Day, Independence Day, Labor Day, Thanksgiving Day, And Christmas Day (7).

T. Paid Holidays: New Year's Day, Washington's Birthday, Memorial Day, Independence Day, Labor Day, Thanksgiving Day, The Friday After Thanksgiving Day, Christmas Day, And The Day Before Or After Christmas (9).

Z. Holidays: New Year's Day, Memorial Day, Independence Day, Labor Day, Veterans Day, Thanksgiving Day, the Friday after Thanksgiving Day, And Christmas Day (8).

6. A. Paid Holidays: New Year's Day, Presidents' Day, Memorial Day, Independence Day, Labor Day, Thanksgiving Day, the Friday after Thanksgiving Day, And Christmas Day (8).

E. Paid Holidays: New Year's Day, Day Before Or After New Year's Day, Presidents Day, Memorial Day, Independence Day, Labor Day, Thanksgiving Day, the Friday after Thanksgiving Day, Christmas Day, and a Half-

INFORMATIONAL COPY ONLY - NOT FOR BIDDING

Day On Christmas Eve Day. (9 1/2).

Holiday Codes Continued

6. G. Paid Holidays: New Year's Day, Martin Luther King Jr. Day, Presidents' Day, Memorial Day, Independence Day, Labor Day, Veterans' Day, Thanksgiving Day, the Friday after Thanksgiving Day, Christmas Day, and Christmas Eve Day (11).

H. Paid Holidays: New Year's Day, New Year's Eve Day, Memorial Day, Independence Day, Labor Day, Thanksgiving Day, Friday After Thanksgiving Day, Christmas Day, The Day After Christmas, And A Floating Holiday (10).

I. Paid Holidays: New Year's Day, Memorial Day, Independence Day, Labor Day, Thanksgiving Day, Friday After Thanksgiving Day, And Christmas Day (7).

6. T. Paid Holidays: New Year's Day, Presidents' Day, Memorial Day, Independence Day, Labor Day, Thanksgiving Day, The Friday After Thanksgiving Day, The Last Working Day Before Christmas Day, And Christmas Day (9).

Z. Holidays: New Year's Day, Memorial Day, Independence Day, Labor Day, Thanksgiving Day, Friday after Thanksgiving Day, And Christmas Day (7). If a holiday falls on Saturday, the preceding Friday shall be considered as the holiday. If a holiday falls on Sunday, the following Monday shall be considered as the holiday.

7. A. Holidays: New Year's Day, Memorial Day, Independence Day, Labor Day, Thanksgiving Day, the Friday and Saturday after Thanksgiving Day, And Christmas Day (8). Any Holiday Which Falls On A Sunday Shall Be Observed As A Holiday On The Following Monday. If any of the listed holidays falls on a Saturday, the preceding Friday shall be a regular work day.

B. Holidays: New Year's Day, Memorial Day, Independence Day, Labor Day, Thanksgiving Day, the Friday and Saturday after Thanksgiving Day, And Christmas Day (8). Any holiday which falls on a Sunday shall be observed as a holiday on the following Monday. Any holiday which falls on a Saturday shall be observed as a holiday on the preceding Friday.

C. Holidays: New Year's Day, Martin Luther King Jr. Day, Memorial Day, Independence Day, Labor Day, Thanksgiving Day, the Friday after Thanksgiving Day, And Christmas Day (8). Any holiday which falls on a Sunday shall be observed as a holiday on the following Monday. Any holiday which falls on a Saturday shall be observed as a holiday on the preceding Friday.

D. Paid Holidays: New Year's Day, Memorial Day, Independence Day, Labor Day, Veteran's Day, Thanksgiving Day, the Friday after Thanksgiving Day, And Christmas Day (8). Unpaid Holidays: President's Day. Any paid holiday which falls on a Sunday shall be observed as a holiday on the following Monday. Any paid holiday which falls on a Saturday shall be observed as a holiday on the preceding Friday.

E. Holidays: New Year's Day, Memorial Day, Independence Day, Labor Day, Thanksgiving Day, the Friday after Thanksgiving Day, And Christmas Day (7). Any holiday which falls on a Sunday shall be observed as a holiday on the following Monday. Any holiday which falls on a Saturday shall be observed as a holiday on the preceding Friday.

F. Holidays: New Year's Day, Memorial Day, Independence Day, Labor Day, Thanksgiving Day, the Friday after Thanksgiving Day, the last working day before Christmas day and Christmas day (8). Any holiday which falls on a Sunday shall be observed as a holiday on the following Monday. Any holiday which falls on a Saturday shall be observed as a holiday on the preceding Friday.

G. Holidays: New Year's Day, Memorial Day, Independence Day, Labor Day, Thanksgiving Day, and Christmas Day (6). Any holiday which falls on a Sunday shall be observed as a holiday on the following Monday.

INFORMATIONAL COPY ONLY - NOT FOR BIDDING

Holiday Codes Continued

7. H. Holidays: New Year's Day, Martin Luther King Jr. Day, Independence Day, Memorial Day, Labor Day, Thanksgiving Day, the Friday after Thanksgiving Day, the Last Working Day before Christmas Day and Christmas Day (9). Any holiday which falls on a Sunday shall be observed as a holiday on the following Monday. Any holiday which falls on a Saturday shall be observed as a holiday on the preceding Friday.

I. Holidays: New Year's Day, President's Day, Independence Day, Memorial Day, Labor Day, Thanksgiving Day, The Friday After Thanksgiving Day, The Day Before Christmas Day And Christmas Day (9). Any holiday which falls on a Sunday shall be observed as a holiday on the following Monday. Any holiday which falls on a Saturday shall be observed as a holiday on the preceding Friday.

J. Holidays: New Year's Day, Independence Day, Memorial Day, Labor Day, Thanksgiving Day and Christmas Day (6). Any holiday which falls on a Sunday shall be observed as a holiday on the following Monday. Any holiday which falls on a Saturday shall be observed as a holiday on the preceding Friday.

K. Holidays: New Year's Day, Memorial Day, Independence Day, Thanksgiving Day, the Friday and Saturday after Thanksgiving Day, And Christmas Day (8). Any holiday which falls on a Sunday shall be observed as a holiday on the following Monday. Any holiday which falls on a Saturday shall be observed as a holiday on the preceding Friday.

L. Holidays: New Year's Day, Memorial Day, Labor Day, Independence Day, Thanksgiving Day, the Last Work Day before Christmas Day, And Christmas Day (7). Any holiday which falls on a Sunday shall be observed as a holiday on the following Monday. Any holiday which falls on a Saturday shall be observed as a holiday on the preceding Friday.

M. Paid Holidays: New Year's Day, The Day after or before New Year's Day, President's Day, Memorial Day, Independence Day, Labor Day, Thanksgiving Day, the Friday after Thanksgiving Day, Christmas Day, And the Day after or before Christmas Day (10). Any holiday which falls on a Sunday shall be observed as a holiday on the following Monday. Any holiday which falls on a Saturday shall be observed as a holiday on the preceding Friday.

N. Holidays: New Year's Day, Memorial Day, Independence Day, Labor Day, Thanksgiving Day, the Friday after Thanksgiving Day, And Christmas Day (7). Any holiday which falls on a Sunday shall be observed as a holiday on the following Monday. When Christmas falls on a Saturday, the preceding Friday shall be observed as a holiday.

P. Holidays: New Year's Day, Memorial Day, Independence Day, Labor Day, Thanksgiving Day, Friday after Thanksgiving Day, And Christmas Day (7). Any holiday which falls on a Sunday shall be observed as a holiday on the following Monday.

Q. Holidays: New Year's Day, Memorial Day, Independence Day, Labor Day, Thanksgiving Day, the Friday after Thanksgiving Day, the Last Working Day before Christmas Day and Christmas Day (8). Any holiday which falls on a Sunday shall be observed as a holiday on the following Monday. If any of the listed holidays falls on a Saturday, the preceding Friday shall be a regular work day.

R. Paid Holidays: New Year's Day, the day after or before New Year's Day, President's Day, Memorial Day, Independence Day, Labor Day, Thanksgiving Day, the Friday after Thanksgiving Day, Christmas Day, and the day after or before Christmas Day (10). If any of the listed holidays fall on Saturday, the preceding Friday shall be observed as the holiday. If any of the listed holidays falls on a Sunday, the day observed by the Nation shall be considered a holiday and compensated accordingly.

S. Paid Holidays: New Year's Day, Memorial Day, Independence Day, Labor Day, Thanksgiving Day, Friday after Thanksgiving Day, Christmas Day, the Day after Christmas, and A Floating Holiday (9). If any of the listed holidays falls on a Sunday, the day observed by the Nation shall be considered a holiday and compensated accordingly.

INFORMATIONAL COPY ONLY - NOT FOR BIDDING

Holiday Codes Continued

7. T. Paid Holidays: New Year's Day, the Day after or before New Year's Day, President's Day, Memorial Day, Independence Day, Labor Day, Thanksgiving Day, the Friday after Thanksgiving Day, Christmas Day, and The Day after or before Christmas Day. (10). If any of the listed holidays falls on a Sunday, the day observed by the Nation shall be considered a holiday and compensated accordingly. Any holiday which falls on a Saturday shall be observed as a holiday on the preceding Friday.

V. Holidays: New Year's Day, President's Birthday, Memorial Day, Independence Day, Labor Day, Thanksgiving Day, the Friday after Thanksgiving Day, Christmas Day, the day before or after Christmas, and the day before or after New Year's Day. If any of the above listed holidays falls on a Sunday, the day observed by the Nation shall be considered a holiday and compensated accordingly.

W. Holidays: New Year's Day, Day After New Year's, Memorial Day, Independence Day, Labor Day, Thanksgiving Day, the Friday after Thanksgiving Day, Christmas Eve Day, Christmas Day, the day after Christmas, the day before New Year's Day, and a Floating Holiday.

X. Holidays: New Year's Day, Day before or after New Year's Day, Presidents' Day, Memorial Day, Independence Day, Labor Day, Thanksgiving Day, the Friday after Thanksgiving Day, Christmas Day, and the day before or after Christmas day. If a holiday falls on a Saturday or on a Friday that is the normal day off, then the holiday will be taken on the last normal workday. If the holiday falls on a Monday that is the normal day off or on a Sunday, then the holiday will be taken on the next normal workday.

Y. Holidays: New Year's Day, Presidents' Day, Memorial Day, Independence Day, Labor Day, Thanksgiving Day, the Friday after Thanksgiving Day, and Christmas Day. (8) If the holiday falls on a Sunday, then the day observed by the federal government shall be considered a holiday and compensated accordingly.

Z. Holidays: New Year's Day, President's Day, Independence Day, Memorial Day, Labor Day, Thanksgiving Day, The Friday After Thanksgiving Day, And Christmas Day (8). Any holiday which falls on a Sunday shall be observed as a holiday on the following Monday. Any holiday which falls on a Saturday shall be observed as a holiday on the preceding Friday.

15. A. Holidays: New Year's Day, Memorial Day, Independence Day, Labor Day, Thanksgiving Day, the Friday after Thanksgiving Day, the day before Christmas Day and Christmas Day. (8) Any holiday which falls on a Sunday shall be observed as a holiday on the following Monday.

B. Holidays: New Year's Day, Martin Luther King Jr. Day, President's Day, Memorial Day, Independence Day, Labor Day, Veteran's Day, Thanksgiving Day, and Christmas Day. (9)

C. Holidays: New Year's Day, Memorial Day, Independence Day, Labor Day, Thanksgiving Day, the Friday after Thanksgiving Day, the day before Christmas Day and Christmas Day. (8)

D Holidays: New Year's Day, Presidents' Day, Memorial Day, Independence Day, Labor Day, Thanksgiving Day, Friday after Thanksgiving Day, Christmas Day, and the day after Christmas.

INFORMATIONAL COPY ONLY - NOT FOR BIDDING

Note Codes

8. D. Workers working with supplied air on hazmat projects receive an additional $1.00 per hour.

L. Workers on hazmat projects receive additional hourly premiums as follows -Level A: $0.75, Level B: $0.50, And Level C: $0.25.

M. Workers on hazmat projects receive additional hourly premiums as follows: Levels A & B: $1.00, Levels C & D: $0.50.

N. Workers on hazmat projects receive additional hourly premiums as follows -Level A: $1.00, Level B: $0.75, Level C: $0.50, And Level D: $0.25.

P. Workers on hazmat projects receive additional hourly premiums as follows -Class A Suit: $2.00, Class B Suit: $1.50, Class C Suit: $1.00, And Class D Suit $0.50.

Q. The highest pressure registered on the gauge for an accumulated time of more than fifteen (15) minutes during the shift shall be used in determining the scale paid.

R. Effective August 31, 2012 – A Traffic Control Supervisor shall be present on the project whenever flagging or spotting or other traffic control labor is being utilized. A Traffic Control Laborer performs the setup, maintenance and removal of all temporary traffic control devices and construction signs necessary to control vehicular, bicycle, and pedestrian traffic during construction operations. Flaggers and Spotters shall be posted where shown on approved Traffic Control Plans or where directed by the Engineer. All flaggers and spotters shall possess a current flagging card issued by the State of Washington, Oregon, Montana, or Idaho. These classifications are only effective on or after August 31, 2012.

S. Effective August 31, 2012 – A Traffic Control Supervisor shall be present on the project whenever flagging or spotting or other traffic control labor is being utilized. Flaggers and Spotters shall be posted where shown on approved Traffic Control Plans or where directed by the Engineer. All flaggers and spotters shall possess a current flagging card issued by the State of Washington, Oregon, Montana, or Idaho. This classification is only effective on or after August 31, 2012.

T. Effective August 31, 2012 – A Traffic Control Laborer performs the setup, maintenance and removal of all temporary traffic control devices and construction signs necessary to control vehicular, bicycle, and pedestrian traffic during construction operations. Flaggers and Spotters shall be posted where shown on approved Traffic Control Plans or where directed by the Engineer. All flaggers and spotters shall possess a current flagging card issued by the State of Washington, Oregon, Montana, or Idaho. This classification is only effective on or after August 31, 2012.

U. Workers on hazmat projects receive additional hourly premiums as follows – Class A Suit: $2.00, Class B Suit: $1.50, And Class C Suit: $1.00. Workers performing underground work receive an additional $0.40 per hour for any and all work performed underground, including operating, servicing and repairing of equipment. The premium for underground work shall be paid for the entire shift worked. Workers who work suspended by a rope or cable receive an additional $0.50 per hour. The premium for work suspended shall be paid for the entire shift worked. Workers who do "pioneer" work (break open a cut, build road, etc.) more than one hundred fifty (150) feet above grade elevation receive an additional $0.50 per hour.

INFORMATIONAL COPY ONLY - NOT FOR BIDDING

Note Codes Continued

8. V. In addition to the hourly wage and fringe benefits, the following depth and enclosure premiums shall be paid. The premiums are to be calculated for the maximum depth and distance into an enclosure that a diver reaches in a day. The premiums are to be paid one time for the day and are not used in calculating overtime pay.

Depth premiums apply to depths of fifty feet or more. Over 50' to 100' - $2.00 per foot for each foot over 50 feet. Over 101' to 150' - $3.00 per foot for each foot over 101 feet. Over 151' to 220' - $4.00 per foot for each foot over 220 feet. Over 221' - $5.00 per foot for each foot over 221 feet.

Enclosure premiums apply when divers enter enclosures (such as pipes or tunnels) where there is no vertical ascent and is measured by the distance travelled from the entrance. 25' to 300' - $1.00 per foot from entrance. 300' to 600' - $1.50 per foot beginning at 300'. Over 600' - $2.00 per foot beginning at 600'.

W. Meter Installers work on single phase 120/240V self-contained residential meters. The Lineman/Groundmen rates would apply to meters not fitting this description.

X. Workers on hazmat projects receive additional hourly premiums as follows - Class A Suit: $2.00, Class B Suit: $1.50, Class C Suit: $1.00, and Class D Suit: $0.50. Special Shift Premium: Basic hourly rate plus $2.00 per hour.

When due to conditions beyond the control of the Employer or when an owner (not acting as the contractor), a government agency or the contract specifications requires that work can only be performed outside the normal 5 am to 6pm shift, then the special shift premium will be applied to the basic hourly rate. When an employee works on a special shift, they shall be paid a special shift premium for each hour worked unless they are in OT or Double-time status. (For example, the special shift premium does not waive the overtime requirements for work performed on Saturday or Sunday.)

INFORMATIONAL COPY ONLY - NOT FOR BIDDING

Washington State Department of Labor and Industries
Policy Statement
(Regarding the Production of "Standard" or "Non-standard" Items)

Below is the department's (State L&I's) list of criteria to be used in determining whether a prefabricated item is "standard" or "non-standard". For items not appearing on WSDOT's predetermined list, these criteria shall be used by the Contractor (and the Contractor's subcontractors, agents to subcontractors, suppliers, manufacturers, and fabricators) to determine coverage under RCW 39.12. The production, in the State of Washington, of non-standard items is covered by RCW 39.12, and the production of standard items is not. The production of any item outside the State of Washington is not covered by RCW 39.12.

1. Is the item fabricated for a public works project? If not, it is not subject to RCW 39.12. If it is, go to question 2.

2. Is the item fabricated on the public works jobsite? If it is, the work is covered under RCW 39.12. If not, go to question 3.

3. Is the item fabricated in an assembly/fabrication plant set up for, and dedicated primarily to, the public works project? If it is, the work is covered by RCW 39.12. If not, go to question 4.

4. Does the item require any assembly, cutting, modification or other fabrication by the supplier? If not, the work is not covered by RCW 39.12. If yes, go to question 5.

5. Is the prefabricated item intended for the public works project typically an inventory item which could reasonably be sold on the general market? If not, the work is covered by RCW 39.12. If yes, go to question 6.

6. Does the specific prefabricated item, generally defined as standard, have any unusual characteristics such as shape, type of material, strength requirements, finish, etc? If yes, the work is covered under RCW 39.12.

Any firm with questions regarding the policy, WSDOT's Predetermined List, or for determinations of covered and non-covered workers shall be directed to State L&I at (360) 902-5330.

INFORMATIONAL COPY ONLY - NOT FOR BIDDING

WSDOT's
Predetermined List for
Suppliers - Manufactures - Fabricator

Below is a list of potentially prefabricated items, originally furnished by WSDOT to Washington State Department of Labor and Industries, that may be considered non-standard and therefore covered by the prevailing wage law, RCW 39.12. Items marked with an X in the "YES" column should be considered to be non-standard and therefore covered by RCW 39.12. Items marked with an X in the "NO" column should be considered to be standard and therefore not covered. Of course, exceptions to this general list may occur, and in that case shall be evaluated according to the criteria described in State and L&I's policy statement.

	ITEM DESCRIPTION	YES	NO
1.	Metal rectangular frames, solid metal covers, herringbone grates, and bi-directional vaned grates for Catch Basin Types 1, 1L, 1P, and 2 and Concrete Inlets. See Std. Plans		X
2.	Metal circular frames (rings) and covers, circular grates, and prefabricated ladders for Manhole Types 1, 2, and 3, Drywell Types 1, 2, and 3 and Catch Basin Type 2. See Std. Plans		X
3.	Prefabricated steel grate supports and welded grates, metal frames and dual vaned grates, and Type 1, 2, and 3 structural tubing grates for Drop Inlets. See Std. Plans.		X
4.	Concrete Pipe - Plain Concrete pipe and reinforced concrete pipe Class 2 to 5 sizes smaller than 60 inch diameter.		X
5.	Concrete Pipe - Plain Concrete pipe and reinforced concrete pipe Class 2 to 5 sizes larger than 60 inch diameter.		X
6.	Corrugated Steel Pipe - Steel lock seam corrugated pipe for culverts and storm sewers, sizes 30 inch to 120 inches in diameter. May also be treated, 1 thru 5.		X
7.	Corrugated Aluminum Pipe - Aluminum lock seam corrugated pipe for culverts and storm sewers, sizes 30 inch to 120 inches in diameter. May also be treated, #5.		X

INFORMATIONAL COPY ONLY - NOT FOR BIDDING

	ITEM DESCRIPTION	YES	NO
8.	Anchor Bolts & Nuts - Anchor Bolts and Nuts, for mounting sign structures, luminaries and other items, shall be made from commercial bolt stock. See Contract Plans and Std. Plans for size and material type.		X
9.	Aluminum Pedestrian Handrail - Pedestrian handrail conforming to the type and material specifications set forth in the contract plans. Welding of aluminum shall be in accordance with Section 9-28.14(3).	X	
10.	Major Structural Steel Fabrication - Fabrication of major steel items such as trusses, beams, girders, etc., for bridges.	X	
11.	Minor Structural Steel Fabrication - Fabrication of minor steel Items such as special hangers, brackets, access doors for structures, access ladders for irrigation boxes, bridge expansion joint systems, etc., involving welding, cutting, punching and/or boring of holes. See Contact Plans for item description and shop drawings.	X	
12.	Aluminum Bridge Railing Type BP - Metal bridge railing conforming to the type and material specifications set forth in the Contract Plans. Welding of aluminum shall be in accordance with Section 9-28.14(3).		X
13.	Concrete Piling--Precast-Prestressed concrete piling for use as 55 and 70 ton concrete piling. Concrete to conform to Section 9-19.1 of Std. Spec..	X	
14.	Precast Manhole Types 1, 2, and 3 with cones, adjustment sections and flat top slabs. See Std. Plans.		X
15.	Precast Drywell Types 1, 2, and with cones and adjustment Sections. See Std. Plans.		X
16.	Precast Catch Basin - Catch Basin type 1, 1L, 1P, and 2 With adjustment sections. See Std. Plans.		X

INFORMATIONAL COPY ONLY - NOT FOR BIDDING

ITEM DESCRIPTION	YES	NO
17. Precast Concrete Inlet - with adjustment sections, See Std. Plans		X
18. Precast Drop Inlet Type 1 and 2 with metal grate supports. See Std. Plans.		X
19. Precast Grate Inlet Type 2 with extension and top units. See Std. Plans		X
20. Metal frames, vaned grates, and hoods for Combination Inlets. See Std. Plans		X
21. Precast Concrete Utility Vaults - Precast Concrete utility vaults of various sizes. Used for in ground storage of utility facilities and controls. See Contract Plans for size and construction requirements. Shop drawings are to be provided for approval prior to casting		X
22. Vault Risers - For use with Valve Vaults and Utilities X Vaults.		X
23. Valve Vault - For use with underground utilities. See Contract Plans for details.		X
24. Precast Concrete Barrier - Precast Concrete Barrier for use as new barrier or may also be used as Temporary Concrete Barrier. Only new state approved barrier may be used as permanent barrier.		X
25. Reinforced Earth Wall Panels – Reinforced Earth Wall Panels in size and shape as shown in the Plans. Fabrication plant has annual approval for methods and materials to be used. See Shop Drawing. Fabrication at other locations may be approved, after facilities inspection, contact HQ. Lab.	X	
26. Precast Concrete Walls - Precast Concrete Walls - tilt-up wall panel in size and shape as shown in Plans. Fabrication plant has annual approval for methods and materials to be used	X	

INFORMATIONAL COPY ONLY - NOT FOR BIDDING

	ITEM DESCRIPTION	YES	NO
27.	Precast Railroad Crossings - Concrete Crossing Structure Slabs.	X	
28.	12, 18 and 26 inch Standard Precast Prestressed Girder – Standard Precast Prestressed Girder for use in structures. Fabricator plant has annual approval of methods and materials to be used. Shop Drawing to be provided for approval prior to casting girders. See Std. Spec. Section 6-02.3(25)A	X	
29.	Prestressed Concrete Girder Series 4-14 - Prestressed Concrete Girders for use in structures. Fabricator plant has annual approval of methods and materials to be used. Shop Drawing to be provided for approval prior to casting girders. See Std. Spec. Section 6-02.3(25)A .	X	
30.	Prestressed Tri-Beam Girder - Prestressed Tri-Beam Girders for use in structures. Fabricator plant has annual approval of methods and materials to be used. Shop Drawing to be provided for approval prior to casting girders. See Std. Spec. Section 6-02.3(25)A	X	
31.	Prestressed Precast Hollow-Core Slab – Precast Prestressed Hollow-core slab for use in structures. Fabricator plant has annual approval of methods and materials to be used. Shop Drawing to be provided for approval prior to casting girders. See Std. Spec. Section 6-02.3(25)A.	X	
32.	Prestressed-Bulb Tee Girder - Bulb Tee Prestressed Girder for use in structures. Fabricator plant has annual approval of methods and materials to be used. Shop Drawing to be provided for approval prior to casting girders. See Std. Spec. Section 6-02.3(25)A	X	
33.	Monument Case and Cover See Std. Plan.		X

INFORMATIONAL COPY ONLY - NOT FOR BIDDING

	ITEM DESCRIPTION	YES	NO
34.	Cantilever Sign Structure - Cantilever Sign Structure fabricated from steel tubing meeting AASHTO-M-183. See Std. Plans, and Contract Plans for details. The steel structure shall be galvanized after fabrication in accordance with AASHTO-M-111.	X	
35.	Mono-tube Sign Structures - Mono-tube Sign Bridge fabricated to details shown in the Plans. Shop drawings for approval are required prior to fabrication.	X	
36.	Steel Sign Bridges - Steel Sign Bridges fabricated from steel tubing meeting AASHTO-M-138 for Aluminum Alloys. See Std. Plans, and Contract Plans for details. The steel structure shall be galvanized after fabrication in accordance with AASHTO-M-111.	X	
37.	Steel Sign Post - Fabricated Steel Sign Posts as detailed in Std Plans. Shop drawings for approval are to be provided prior to fabrication		X
38.	Light Standard-Prestressed - Spun, prestressed, hollow concrete poles.	X	
39.	Light Standards - Lighting Standards for use on highway illumination systems, poles to be fabricated to conform with methods and materials as specified on Std. Plans. See Specia Provisions for pre-approved drawings.	X	
40.	Traffic Signal Standards - Traffic Signal Standards for use on highway and/or street signal systems. Standards to be fabricated to conform with methods and material as specified on Std. Plans. See Special Provisions for pre-approved drawings	X	
41.	Precast Concrete Sloped Mountable Curb (Single and DualFaced) See Std. Plans.		X

INFORMATIONAL COPY ONLY - NOT FOR BIDDING

ITEM DESCRIPTION	YES	NO
42. Traffic Signs - Prior to approval of a Fabricator of Traffic Signs, the sources of the following materials must be submitted and approved for reflective sheeting, legend material, and aluminum sheeting. **NOTE:** *** Fabrication inspection required. Only signs tagged "Fabrication Approved" by WSDOT Sign Fabrication Inspector to be installed	X	X
	Custom Message	Std Signing Message
43. Cutting & bending reinforcing steel		X
44. Guardrail components	X	X
	Custom End Sec	Standard Sec
45. Aggregates/Concrete mixes	Covered by WAC 296-127-018	
46. Asphalt	Covered by WAC 296-127-018	
47. Fiber fabrics		X
48. Electrical wiring/components		X
49. treated or untreated timber pile		X
50. Girder pads (elastomeric bearing)	X	
51. Standard Dimension lumber		X
52. Irrigation components		X

INFORMATIONAL COPY ONLY - NOT FOR BIDDING

ITEM DESCRIPTION	YES	NO
53. Fencing materials		X
54. Guide Posts		X
55. Traffic Buttons		X
56. Epoxy		X
57. Cribbing		X
58. Water distribution materials		X
59. Steel "H" piles		X
60. Steel pipe for concrete pile casings		X
61. Steel pile tips, standard		X
62. Steel pile tips, custom	X	

Prefabricated items specifically produced for public works projects that are prefabricated in a county other than the county wherein the public works project is to be completed, the wage for the offsite prefabrication shall be the applicable prevailing wage for the county in which the actual prefabrication takes place.

It is the manufacturer of the prefabricated product to verify that the correct county wage rates are applied to work they perform.

See RCW 39.12.010
(The definition of "locality" in RCW 39.12.010(2) contains the phrase "wherein the physical work is being performed." The department interprets this phrase to mean the actual work site.

INFORMATIONAL COPY ONLY - NOT FOR BIDDING

WSDOT's List of State Occupations not applicable to Heavy and Highway Construction Projects

This project is subject to the state hourly minimum rates for wages and fringe benefits in the contract provisions, as provided by the state Department of Labor and Industries.
The following list of occupations, is comprised of those occupations that are not normally used in the construction of heavy and highway projects.
When considering job classifications for use and / or payment when bidding on, or building heavy and highway construction projects for, or administered by WSDOT, these Occupations will be excepted from the included "Washington State Prevailing Wage Rates For Public Work Contracts" documents.

- Building Service Employees
- Electrical Fixture Maintenance Workers
- Electricians - Motor Shop
- Heating Equipment Mechanics
- Industrial Engine and Machine Mechanics
- Industrial Power Vacuum Cleaners
- Inspection, Cleaning, Sealing of Water Systems by Remote Control
- Laborers - Underground Sewer & Water
- Machinists (Hydroelectric Site Work)
- Modular Buildings
- Playground & Park Equipment Installers
- Power Equipment Operators - Underground Sewer & Water
- Residential *** ALL ASSOCIATED RATES ***
- Sign Makers and Installers (Non-Electrical)
- Sign Makers and Installers (Electrical)
- Stage Rigging Mechanics (Non Structural)

The following occupations may be used only as outlined in the preceding text concerning "WSDOT's list for Suppliers - Manufacturers - Fabricators"

- Fabricated Precast Concrete Products
- Metal Fabrication (In Shop)

Definitions for the Scope of Work for prevailing wages may be found at the Washington State Department of Labor and Industries web site and in WAC Chapter 296-127.

INFORMATIONAL COPY ONLY - NOT FOR BIDDING

Washington State Department of Labor and Industries
Policy Statements
(Regarding Production and Delivery of Gravel, Concrete, Asphalt, etc.)

WAC 296-127-018 Agency filings affecting this section

Coverage and exemptions of workers involved in the production and delivery of gravel, concrete, asphalt, or similar materials.

(1) The materials covered under this section include but are not limited to: Sand, gravel, crushed rock, concrete, asphalt, or other similar materials.

(2) All workers, regardless of by whom employed, are subject to the provisions of chapter 39.12 RCW when they perform any or all of the following functions:

(a) They deliver or discharge any of the above-listed materials to a public works project site:

(i) At one or more point(s) directly upon the location where the material will be incorporated into the project; or

(ii) At multiple points at the project; or

(iii) Adjacent to the location and coordinated with the incorporation of those materials.

(b) They wait at or near a public works project site to perform any tasks subject to this section of the rule.

(c) They remove any materials from a public works construction site pursuant to contract requirements or specifications (e.g., excavated materials, materials from demolished structures, clean-up materials, etc.).

(d) They work in a materials production facility (e.g., batch plant, borrow pit, rock quarry, etc.,) which is established for a public works project for the specific, but not necessarily exclusive, purpose of supplying materials for the project.

(e) They deliver concrete to a public works site regardless of the method of incorporation.

(f) They assist or participate in the incorporation of any materials into the public works project.

INFORMATIONAL COPY ONLY - NOT FOR BIDDING

(3) All travel time that relates to the work covered under subsection (2) of this section requires the payment of prevailing wages. Travel time includes time spent waiting to load, loading, transporting, waiting to unload, and delivering materials. Travel time would include all time spent in travel in support of a public works project whether the vehicle is empty or full. For example, travel time spent returning to a supply source to obtain another load of material for use on a public works site or returning to the public works site to obtain another load of excavated material is time spent in travel that is subject to prevailing wage. Travel to a supply source, including travel from a public works site, to obtain materials for use on a private project would not be travel subject to the prevailing wage.

(4) Workers are not subject to the provisions of chapter 39.12 RCW when they deliver materials to a stockpile.

(a) A "stockpile" is defined as materials delivered to a pile located away from the site of incorporation such that the stockpiled materials must be physically moved from the stockpile and transported to another location on the project site in order to be incorporated into the project.

(b) A stockpile does not include any of the functions described in subsection (2)(a) through (f) of this section; nor does a stockpile include materials delivered or distributed to multiple locations upon the project site; nor does a stockpile include materials dumped at the place of incorporation, or adjacent to the location and coordinated with the incorporation.

(5) The applicable prevailing wage rate shall be determined by the locality in which the work is performed. Workers subject to subsection (2)(d) of this section, who produce such materials at an off-site facility shall be paid the applicable prevailing wage rates for the county in which the off-site facility is located. Workers subject to subsection (2) of this section, who deliver such materials to a public works project site shall be paid the applicable prevailing wage rates for the county in which the public works project is located.

[Statutory Authority: Chapter 39.12 RCW, RCW 43.22.051 and 43.22.270. 08-24-101, § 296-127-018, filed 12/2/08, effective 1/2/09. Statutory Authority: Chapters 39.04 and 39.12 RCW and RCW 43.22.270. 92-01-104 and 92-08-101, § 296-127-018, filed 12/18/91 and 4/1/92, effective 8/31/92.]

INFORMATIONAL COPY ONLY - NOT FOR BIDDING

CONSTRUCTION SIGN PLAN

DATE: 5/6/2019

PROJ. NAME: 4 NE **CRP #** 16-09 **PROJ#** 4101

			SIGN	# CHK	# CHK			
ITEM #	MUTCD #	QTY	STATUS	OUT	IN	DESCRIPTION	SIZE	COLOR
1	W20-1	10	OK			RD WORK AHEAD	36X36	B/O
2	W20-3	10	OK			RD CLOSED AHEAD	36X36	B/O
3	G20-1	9	OK			CLOSED TO THRU TRA	60X36	B/O
4	W8-8	10	OK			ROUGH RD	36X36	B/O
5	W21-1701	10	OK			MC USE EXTREME CAUTION	36X36	B/O
6	G20-1	3	OK			4 NE CLOSED WEST BOUND	60X36	B/W
7	G20-1	3	OK			4 NE CLOSED EAST BOUND	36X36	B/O
8	D-3	10	OK			4 NE	30X8	B/O
9	W8-3	10	OK			PAVEMENT ENDS	36X36	B/O
10	R11-3	6	OK			ROAD CLOSED	48X30	B/W

INFORMATIONAL COPY ONLY - NOT FOR BIDDING

***NOTE: 1**

CLASS "B" WORK ZONE FLAGGER SIGNS TO BE PROVIDED BY CONTRACTOR ON TEMPORARY STANDS. IF NECESSARY SIGNS LEFT OVERNIGHT WILL HAVE FLASHERS ATTACHED.

***NOTE: 2**

SIGN TO BE MOUNTED ON ONE (1) EACH TYPE III BARRICADE WITH FLASHERS. MIN EIGNT (8) FT WIDE

--|-|---|-|-- IS THE SYMBOL FOR TWO (2) EACH TYPE III BARRICADES WITH FLASHERS ON THE SIGN PLAN MAP

THERE ARE A TOTAL OF ___14_____ TYPE III BARRICADES ON THIS PROJECT.

***NOTE: 3**

CONTRACTOR IS RESPONSIBLE FOR BARRICADES AND THE MAINTENANCE OF ALL CONSTRUCTION SIGNS AND THE REPLACEMENT OF ALL REMOVED STOP SIGNS. OTHER TRAFFIC SIGNS THAT ARE REMOVED ARE TO BE STORED AT A SITE DETERMINED BY THE PROJECT INSPECTOR. PORTABLE SIGNS AND TRAFFIC CONTROL DEVICES LISTED ARE NOT INTENDED TO BE COMPLETE. OTHER SIGNS MAY BE REQUIRED WITHIN THE PROJECT LIMITS TO ACCOMMODATE CONTRACTORS WORK METHODS.

CHECK OUT--CONTRACTORS REP:_____ DATE_____

CHECK IN---ALL SIGNS IN GOOD ORDER OR AS OTHERWISE NOTED:

CHECK IN--COUNTY REP:_____ DATE_____

4-NE : CRP 16-09

Construction Sign Plan Map

NTS

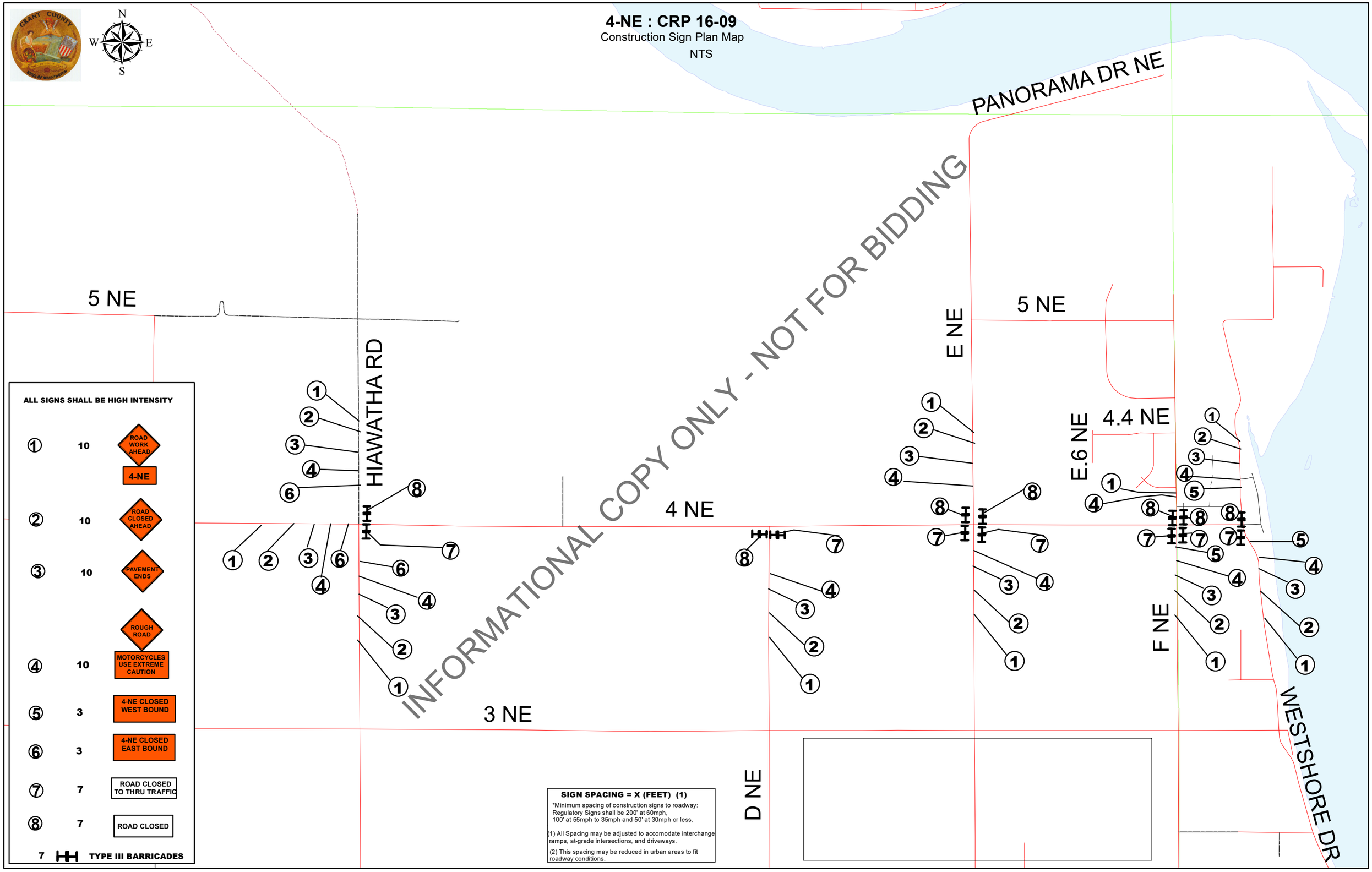

ALL SIGNS SHALL BE HIGH INTENSITY

1	10	ROAD WORK AHEAD / 4-NE
2	10	ROAD CLOSED AHEAD
3	10	PAVEMENT ENDS
4	10	ROUGH ROAD / MOTORCYCLES USE EXTREME CAUTION
5	3	4-NE CLOSED WEST BOUND
6	3	4-NE CLOSED EAST BOUND
7	7	ROAD CLOSED TO THRU TRAFFIC
8	7	ROAD CLOSED
7		TYPE III BARRICADES

SIGN SPACING = X (FEET) (1)

*Minimum spacing of construction signs to roadway: Regulatory Signs shall be 200' at 60mph, 100' at 55mph to 35mph and 50' at 30mph or less.

(1) All Spacing may be adjusted to accomodate interchange ramps, at-grade intersections, and driveways.

(2) This spacing may be reduced in urban areas to fit roadway conditions.

4-NE ROAD RECONSTRUCTION

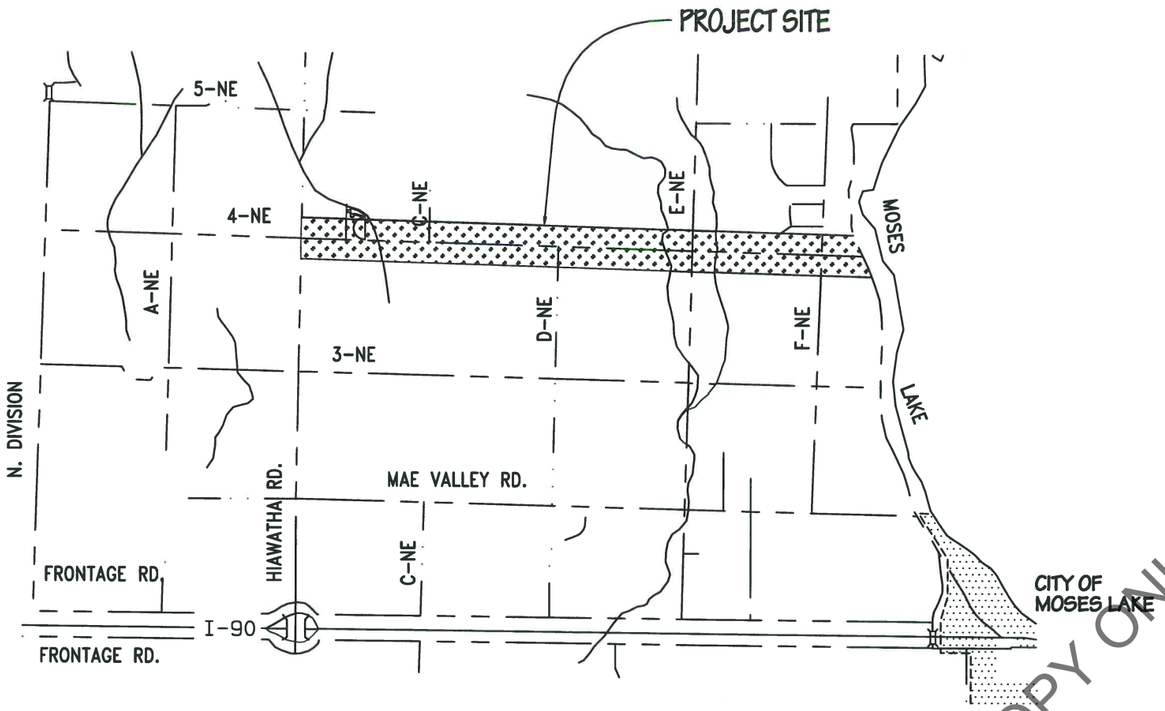

RAP PROJECT #1315-03

SHEET		DESCRIPTION
1	—	INDEX & VICINITY MAP
2	—	SUMMARY OF QUANTITIES
3 - 5	—	STRUCTURE NOTES
6 - 20	—	PLAN AND PROFILE
21 - 22	—	TYPICAL X-SECTIONS

INFORMATIONAL COPY ONLY - NOT FOR BIDDING

LEGEND

- POWER POLE
- TELEPHONE PED.
- FENCE LINE
- CULVERT
- WATER LINE
- CONTROL POINT
- MAILBOX
- TELEPHONE LINE
- POWER LINE

N
W E
S

Grant County
Board Of Commissioners

Richard Stevens, District No. 1
Tom Taylor, District No. 2 (Chair)
Cindy Carter, District No. 3

GRANT COUNTY PUBLIC WORKS DEPARTMENT
124 ENTERPRISE ST. SE
EPHRATA, WASHINGTON 98823
(509) 754-6082 FAX (509) 754-6087

4-NE ROAD RECONSTRUCTION

CRP 16-09

DESIGNED BY:	BOB BERSANTI
CHECKED BY:	JEFF TINCHER
APPROVED BY:	JEFF TINCHER
REVISIONS BY:	
DATE REVISED:	4/30/2019
FEDERAL AID NO.:	

JEFFREY C. TINCHER
STATE OF WASHINGTON
42338
REGISTERED
PROFESSIONAL ENGINEER

DATE: 5/2/2019

SUMMARY OF QUANTITIES

ITEM NO.	TOTAL QUANTITY	UNIT	ITEM DESCRIPTION	CRP 16-09 4-NE STA. 9+00 TO STA. 240+00
			PREPARATION	
1	1	L.S.	Mobilization	1
2	1	L.S.	Clearing & Grubbing	1
			GRADING	
3	70,968	S.Y.	Rotomilling Bituminous Pavement	70,968
4	19,074	C.Y.	Roadway Excavation Including Haul	19,065
5	11,234	C.Y.	Embankment Compaction	11,217
			DRAINAGE	
6	305	L.F.	Plain Steel Culvert Pipe 0.064" Th. - 12" Diameter	305
7	561	L.F.	Plain Steel Culvert Pipe 0.064" Th. - 18" Diameter	561
			SURFACING	
8	33,000	TON	Crushed Surfacing Base Course	33,000
9	22,000	TON	Crushed Surfacing Top Course	22,000
			HOT MIX ASPHALT	
10	560	TON	Commercial HMA	560
			TRAFFIC	
11	2,790	L.F.	Remove Esisting Beam Guardrail and Anchor	2,790
12	2,290	L.F.	Beam Guardrail Type 31	2,290
13	10	EACH	Beam Guardrail Type 31 - Non-Flared Terminal	10
14	60,630	L.F.	Paint Line	60,630
			OTHER ITEMS	
15	1	L.S.	SPCC Plan	1
16	9	EACH	Monument	9
17	1	L.S.	Trimming and Cleanup	1
18	9	ACRE	Seeding, Fertilizing and Mulching with Roadside Mix	9
19	-1.00	Dol.	Minor Change	-1.00

NOTE: For Special Features See Special Provisions.

INFORMATIONAL COPY ONLY - NOT FOR BIDDING

GRANT COUNTY PUBLIC WORKS DEPARTMENT
124 ENTERPRISE ST. SE
EPHRATA, WASHINGTON 98823
(509) 754-6082 FAX (509) 754-6087

4-NE ROAD RECONSTRUCTION

CRP 16-09

DESIGNED BY:	BOB BERSANTI
CHECKED BY:	JEFF TINCHER
APPROVED BY:	JEFF TINCHER
REVISIONS BY:	
DATE REVISED:	4/30/2019
FEDERAL AID NO.:	

JEFFREY C. TINCHER
STATE OF WASHINGTON
42338
REGISTERED
PROFESSIONAL ENGINEER

DATE: 5/2/2019

STRUCTURE NOTES

NOTE: THE FIRST NUMBER OF THE "CODE" REFERS TO THE PLAN SHEET NUMBER OF THE CONTRACT PLANS. THE SECOND NUMBER REFERS TO THE CONSTRUCTION FEATURE FOUND ON THE PARTICULAR SHEET.

CODE	LOCATION	R/L	ELEV.	MISC.	Pl. St. Culvert Pipe 12" Dia. 0.064" Th. L.F.	Pl. St. Culvert Pipe 18" Dia. 0.064" Th. L.F.	Crushed Surfacing Base Course TONS	Crushed Surfacing Top Course TONS	Structure Ex. Class "B" Incl. Haul C.Y.	Remove Existing Beam Guardrail and Anchor L.F.	Beam Guardrail Type 31 L.F.	Beam Guardrail Non-Flared Terminal Type 31 EA.	Gravel Backfill For Pipe Zone Bedding C.Y.	Monument EACH			REMARKS
6-1	STA. 9+85 TO 10+15	L	PLAN	ROAD			50	35									
6-2	STA. 9+83 TO 10+17	R	PLAN	ROAD			50	35									
6-3	STA. 10+00	CL	PLAN	MON										1			5,6
6-4	STA. 16+80 TO 17+00	R	PLAN	F				2									
6-5	STA. 17+25	L/R	BD	CROSS		60			20				8				1,2,3
6-6	STA. 17+80 TO 18+00	L	PLAN	F				2									
6-7	STA. 19+00 TO 19+20	L	PLAN	F				2									
6-8	STA. 19+40 TO 19+60	L	PLAN	F				2									
6-9	STA. 19+50 TO 19+70	R	PLAN	F				2									
6-10	STA. 20+10 TO 20+30	L	PLAN	F				2									
6-11	STA. 22+45 TO 22+65	R	PLAN	F				2									
7-1	STA. 24+00 TO 24+20	R	PLAN	F				2									
7-2	STA. 25+70 TO 25+90	L	PLAN	F				2									
7-3	STA. 26+35 TO 26+55	R	PLAN	O&M				2									
7-4	STA. 26+50 TO 26+70	L	PLAN	F				2									
7-5	STA. 27+00 TO 27+50	R	PLAN	O&M				4									
7-6	STA. 31+30 TO 31+50	L	PLAN	F	30			2									1,2,3
7-7	STA. 36+10 TO 36+30	R	PLAN	F				2									
7-8	STA. 36+50 TO 36+90	L	PLAN	F	65			4									1,2
7-9	STA. 36+74.31	CL	PLAN	MON										1			5,6
7-10	STA. 36+80 TO 37+00	R	PLAN	F				2									
7-11	STA. 37+90 TO 38+10	L/R	BD	CROSS		80			25				10				1,2
7-12	STA. 39+60 TO 39+80	L	PLAN	F				2									
7-13	STA. 39+80 TO 48+30	R	PLAN	RAIL						850	750	2					7,8,9
8-1	STA. 39+80 TO 40+00	L	PLAN	F				2									
8-2	STA. 41+10 TO 48+95	L	PLAN	RAIL						785	685	2					7,8,9
8-3	STA. 49+20 TO 49+40	R	PLAN	F				2									
8-4	STA. 55+50 TO 55+70	R	PLAN	F				2									
8-5	STA. 55+70 TO 55+90	L	PLAN	F				2									
9-1	STA. 57+80 TO 58+00	L	PLAN	F				2									
9-2	STA. 62+10 TO 62+30	L	PLAN	O&M				2									
9-3	STA. 62+20 TO 62+40	R	PLAN	O&M				2									
9-4	STA. 62+40 TO 62+60	L	PLAN	O&M				2									
9-5	STA. 62+50 TO 62+70	R	PLAN	O&M				2									
9-6	STA. 62+12 TO 62+32	L	PLAN	ROAD			40	25									
9-7	STA. 62+12 TO 62+32	R	PLAN	F				2									
7-9	STA. 63+22.48	CL	PLAN	MON										1			5,6
				PAGE TOTALS	95	140	140	158	45	1,635	1,435	4	18	3			

GENERAL NOTES

Miscellaneous

BD = Bottom of Ditch
CP = Catch point
CROSS = Crossing Pipe
R = Residential
F = Farm
PLAN = Elevation on Plans
MON = Monument
O&M = O&M Road
C = Commercial
RAIL = Guardrail

1. Field adjust termini as directed by the engineer.
2. Install 3:1 beveled end sections per standard plans.
3. Remove existing culvert and salvage to contractor.
4. Quantities for embankment and roadway excavation are included in plan quantities whether shown or not.
5. Remove existing monument, if necessary, and case and cover and salvage to contractor.
6. Install monument and case and cover per standard plans.
7. Install Beam Guardrail Non-Flared Terminal Type 31, per standard plan C-22.40-06.
8. Install Beam Guardrail Type 31.
9. Remove existing rail and anchors

NOTE: For Special Features See Special Provisions.

INFORMATIONAL COPY ONLY - NOT FOR BIDDING

GRANT COUNTY PUBLIC WORKS DEPARTMENT
124 ENTERPRISE ST. SE
EPHRATA, WASHINGTON 98823
(509) 754-6082 FAX (509) 754-6087

4-NE ROAD RECONSTRUCTION

CRP 16-09

DESIGNED BY:	BOB BERSANTI
CHECKED BY:	JEFF TINCHER
APPROVED BY:	JEFF TINCHER
REVISIONS BY:	
DATE REVISED:	4/30/2019
FEDERAL AID NO.:	

JEFFREY C. TINCHER
STATE OF WASHINGTON
42338
REGISTERED
PROFESSIONAL ENGINEER

DATE: 5/2/2019

STRUCTURE NOTES

NOTE: THE FIRST NUMBER OF THE "CODE" REFERS TO THE PLAN SHEET NUMBER OF THE CONTRACT PLANS. THE SECOND NUMBER REFERS TO THE CONSTRUCTION FEATURE FOUND ON THE PARTICULAR SHEET.

					Pl. St. Culvert Pipe 12" Dia. 0.064" Th.	Pl. St. Culvert Pipe 18" Dia. 0.064" Th.	Crushed Surfacing Base Course	Crushed Surfacing Top Course	Structure Ex. Class "B" Incl. Haul	Remove Existing Beam Guardrail and Anchor	Beam Guardrail Type 31	Beam Guardrail Non-Flared Terminal Type 31	Gravel Backfill For Pipe Zone Bedding	Monument			REMARKS
10-1	STA. 74+90 TO 75+10	R	PLAN	F				2									
10-2	STA. 75+00 TO 75+20	L	PLAN	F				2									
10-3	STA. 82+85 TO 83+05	L	PLAN	F				2									
10-4	STA. 82+90 TO 83+10	R	PLAN	F				2									
10-5	STA. 87+60	L/R	BD	CROSS		60			20				8				1,2,3
11-1	STA. 90+05 TO 90+25	R	PLAN	F				2									
11-2	STA. 90+10 TO 90+30	L	PLAN	F				2									
11-3	STA. 90+17.93	CL	PLAN	MON										1			5,6
11-4	STA. 91+50 TO 91+70	R	PLAN	F				2									
11-5	STA. 92+50 TO 92+70	L	PLAN	O&M				2									
11-6	STA. 92+90 TO 93+10	R	PLAN	O&M				2									
11-7	STA. 93+30 TO 93+50	L	PLAN	O&M				2									
11-8	STA. 100+10 TO 100+30	L	PLAN	F	30			2									1,2,3
11-9	STA. 103+40 TO 103+60	L	PLAN	F	30			2									1,2,3
12-1	STA. 109+60	L/R	BD	CROSS		60			20				8				1,2,3
12-2	STA. 117+00 TO 117+28	R	PLAN	ROAD		60	40	25									1,2,3
12-3	STA. 117+05 TO 117+25	L	PLAN	F				2									
12-4	STA. 117+13.3	CL	PLAN	MON										1			5,6
12-5	STA. 119+60	L/R	BD	CROSS		66			20				8				1,3
13-1	STA. 131+60 TO 131+80	R	PLAN	F	30			2									1,2,3
13-2	STA. 131+60 TO 131+80	L	PLAN	F	30			2									1,2,3
14-1	STA. 139+00 TO 139+20	R	PLAN	F				2									
14-2	STA. 143+78.58	CL	PLAN	MON										1			5,6
14-3	STA. 143+80 TO 144+00	R	PLAN	F				2									
15-1	STA. 155+70 TO 155+90	R	PLAN	F				2									
15-2	STA. 156+25 TO 159+90	R	PLAN	RAIL						365	265	2					7,8,9
15-3	STA. 163+60	L/R	BD	CROSS		60			20				8				1,2,3
16-1	STA. 168+70 TO 168+90	L	PLAN	F	30			2									1,2,3
16-2	STA. 170+30 TO 170+58	L	PLAN	ROAD		60	40	25									1,2,3
16-3	STA. 170+30 TO 170+58	R	PLAN	ROAD		60	40	25									1,2,3
16-4	STA. 170+43.59	CL	PLAN	MON										1			5,6
16-5	STA. 171+30 TO 171+50	L	PLAN	F	30			2									1,2,3
16-6	STA. 178+80 TO 199+00	R	PLAN	F	30			4									1,2,3
				PAGE TOTALS	210	426	120	121	80	365	265	2	32	4			

GENERAL NOTES

Miscellaneous

BD = Bottom of Ditch
CP = Catch point
CROSS = Crossing Pipe
R = Residential
F = Farm
PLAN = Elevation on Plans
MON = Monument
O&M = O&M Road
C = Commercial
RAIL = Guardrail

1. Field adjust termini as directed by the engineer.
2. Install 3:1 beveled end sections per standard plans.
3. Remove existing culvert and salvage to contractor.
4. Quantities for embankment and roadway excavation are included in plan quantities whether shown or not.
5. Remove existing monument, if necessary, and case and cover and salvage to contractor.
6. Install monument and case and cover per standard plans.
7. Install Beam Guardrail Non-Flared Terminal Type 31, per standard plan C-22.40-06.
8. Install Beam Guardrail Type 31.
9. Remove existing rail and anchors

NOTE: For Special Features See Special Provisions.

INFORMATIONAL COPY ONLY - NOT FOR BIDDING

GRANT COUNTY PUBLIC WORKS DEPARTMENT
124 ENTERPRISE ST. SE
EPHRATA, WASHINGTON 98823
(509) 754-6082 FAX (509) 754-6087

4-NE ROAD RECONSTRUCTION

CRP 16-09

DESIGNED BY:	BOB BERSANTI
CHECKED BY:	JEFF TINCHER
APPROVED BY:	JEFF TINCHER
REVISIONS BY:	
DATE REVISED:	4/30/2019
FEDERAL AID NO.:	

JEFFREY C. TINCHER
STATE OF WASHINGTON
42338
REGISTERED
PROFESSIONAL ENGINEER

DATE: 5/2/2019

STRUCTURE NOTES

NOTE: THE FIRST NUMBER OF THE "CODE" REFERS TO THE PLAN SHEET NUMBER OF THE CONTRACT PLANS. THE SECOND NUMBER REFERS TO THE CONSTRUCTION FEATURE FOUND ON THE PARTICULAR SHEET.

					Pl. St. Culvert Pipe 12" Dia. 0.064" Th.	Pl. St. Culvert Pipe 18" Dia. 0.064" Th.	Crushed Surfacing Base Course	Crushed Surfacing Top Course	Structure Ex. Class "B" Incl. Haul	Remove Existing Beam Guardrail and Anchor	Beam Guardrail Type 31	Beam Guardrail Non-Flared Terminal Type 31	Gravel Backfill For Pipe Zone Bedding	Monument			REMARKS
16-8	STA. 179+30 TO 184+05	L	PLAN	RAIL						475	375	2					7,8,9
16-9	STA. 179+90 TO 183+05	R	PLAN	RAIL						315	215	2					7,8,9
17-1	STA. 184+50 TO 184+70	L	PLAN	F				2									
17-2	STA. 186+80 TO 187+00	R	PLAN	F				2									
17-3	STA. 187+00 TO 187+20	L	PLAN	F				2									
17-4	STA. 189+60 TO 189+80	R	PLAN	F				2									
17-5	STA. 192+60 TO 192+80	L	PLAN	F				2									
17-6	STA. 193+90 TO 194+10	L	PLAN	F				2									
17-7	STA. 196+60 TO 196+80	L	PLAN	F				2									
17-8	STA. 196+80 TO 197+00	R	PLAN	F				2									
17-9	STA. 196+90.81	CL	PLAN	MON										1			5,6
17-10	STA. 197+00 TO 197+20	L	PLAN	F				2									
17-11	STA. 197+10 TO 197+30	R	PLAN	F				2									
17-12	STA. 198+50 TO 198+70	L	PLAN	F				2									
18-1	STA. 200+30 TO 200+50	L	PLAN	F				2									
18-2	STA. 200+50 TO 200+70	R	PLAN	F				2									
18-3	STA. 202+30 TO 202+50	R	PLAN	F				2									
18-4	STA. 203+10 TO 203+30	L	PLAN	F				2									
18-5	STA. 204+50 TO 204+70	L	PLAN	F				2									
18-6	STA. 204+70 TO 204+90	R	PLAN	F				2									
18-7	STA. 204+80 TO 205+00	L	PLAN	F				2									
18-8	STA. 205+00 TO 205+20	R	PLAN	F				2									
18-9	STA. 207+00 TO 207+20	L	PLAN	F				2									
18-10	STA. 208+80 TO 209+00	R	PLAN	F				2									
18-11	STA. 208+80 TO 209+00	L	PLAN	F				2									
18-12	STA. 210+30 TO 210+50	L	PLAN	F				2									
18-13	STA. 212+80 TO 213+00	R	PLAN	F				2									
18-14	STA. 213+00 TO 213+20	L	PLAN	F				2									
19-1	STA. 221+30 TO 221+50	R	PLAN	F				2									
19-2	STA. 223+35 TO 223+59	R	PLAN	ROAD			40	25									
19-3	STA. 223+35 TO 223+59	L	PLAN	ROAD			40	25									
19-4	STA. 223+47.81	CL	PLAN	MON										1			5,6
20-1	STA. 232+10 TO 232+30	R	PLAN	F				2									
20-2	STA. 233+40 TO 233+60	R	PLAN	F				2									
				PAGE TOTALS	0	0	80	106	0	790	590	4	0	2			

GENERAL NOTES

Miscellaneous

BD = Bottom of Ditch
CP = Catch point
CROSS = Crossing Pipe
R = Residential
F = Farm
PLAN = Elevation on Plans
MON = Monument
O&M = O&M Road
C = Commercial
RAIL = Guardrail

1. Field adjust termini as directed by the engineer.
2. Install 3:1 beveled end sections per standard plans.
3. Remove existing culvert and salvage to contractor.
4. Quantities for embankment and roadway excavation are included in plan quantities whether shown or not.
5. Remove existing monument, if necessary, and case and cover and salvage to contractor.
6. Install monument and case and cover per standard plans.
7. Install Beam Guardrail Non-Flared Terminal Type 31, per standard plan C-22.40-06.
8. Install Beam Guardrail Type 31.
9. Remove existing rail and anchors

NOTE: For Special Features See Special Provisions.

INFORMATIONAL COPY ONLY - NOT FOR BIDDING

GRANT COUNTY PUBLIC WORKS DEPARTMENT
124 ENTERPRISE ST. SE
EPHRATA, WASHINGTON 98823
(509) 754-6082 FAX (509) 754-6087

4-NE ROAD RECONSTRUCTION

CRP 16-09

DESIGNED BY:	BOB BERSANTI
CHECKED BY:	JEFF TINCHER
APPROVED BY:	JEFF TINCHER
REVISIONS BY:	
DATE REVISED:	4/30/2019
FEDERAL AID NO.:	

JEFFREY C. TINCHER
STATE OF WASHINGTON
42338
REGISTERED
PROFESSIONAL ENGINEER

DATE: 5/2/2019

TOWNSHIP 19N., RANGE 27E. W.M.

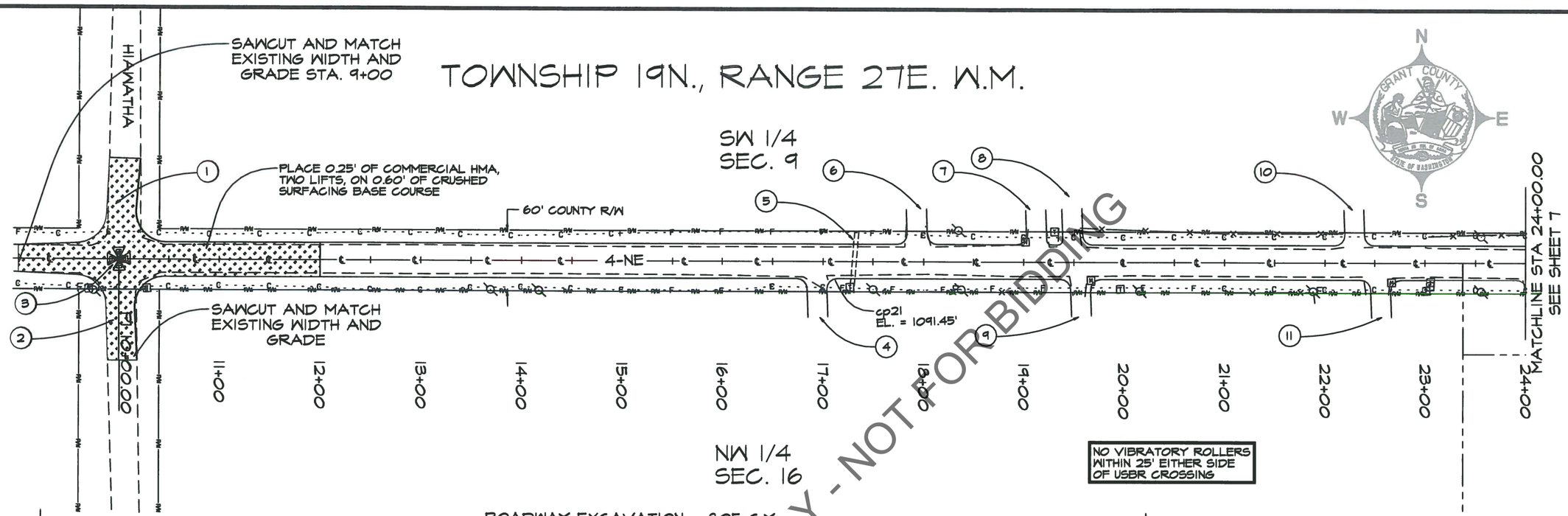

ROADWAY EXCAVATION = 805 C.Y.
EMBANKMENT COMPACTION = 367 C.Y.

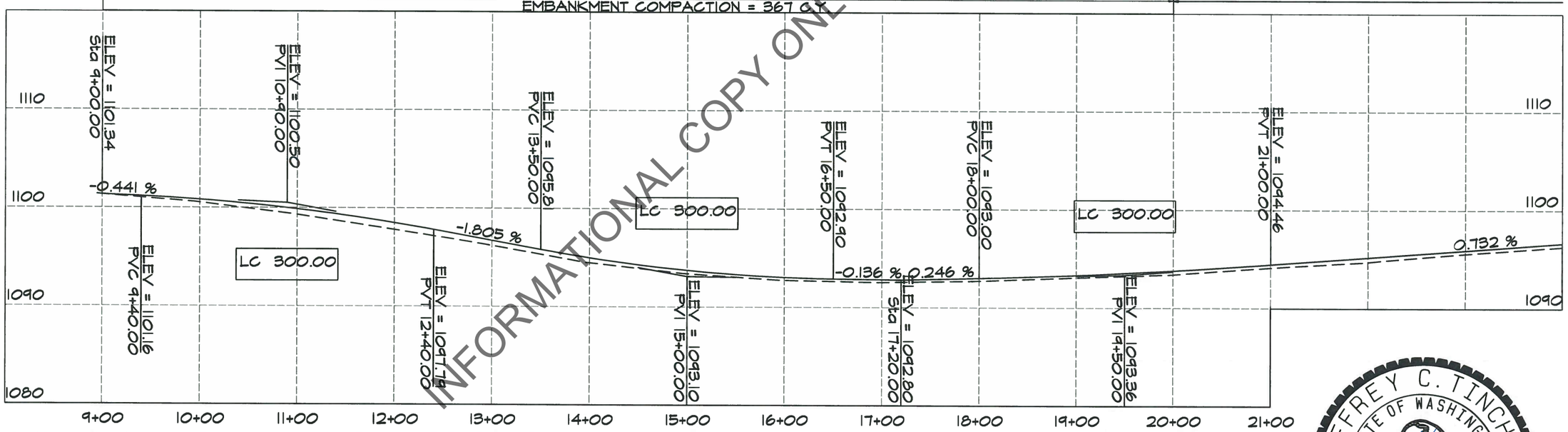

INFORMATIONAL COPY ONLY - NOT FOR BIDDING

GRANT COUNTY PUBLIC WORKS DEPARTMENT
124 ENTERPRISE ST. SE
EPHRATA, WASHINGTON 98823
(509) 754-6082 FAX (509) 754-6087

GRANT COUNTY
TERRA DE SOL ET AQUA
STATE OF WASHINGTON

4-NE ROAD RECONSTRUCTION

CRP 16-09

DESIGNED BY:	BOB BERSANTI
CHECKED BY:	JEFF TINCHER
APPROVED BY:	JEFF TINCHER
REVISIONS BY:	
DATE REVISED:	4/30/2019
FEDERAL AID NO.:	

JEFFREY C. TINCHER
STATE OF WASHINGTON
42338
REGISTERED
PROFESSIONAL ENGINEER

DATE: 5/2/2019

TOWNSHIP 19N., RANGE 27E. W.M.

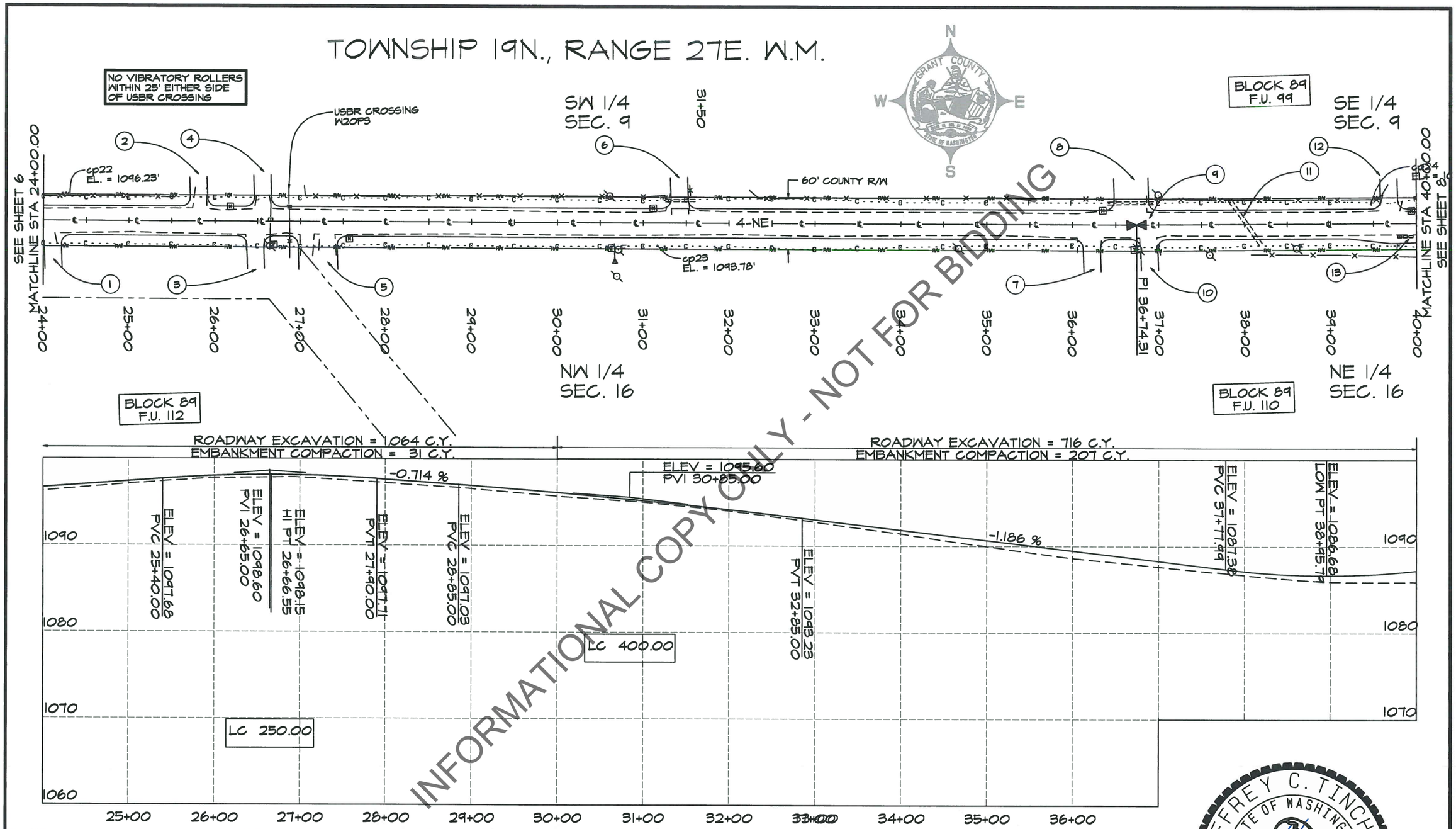

INFORMATIONAL COPY ONLY - NOT FOR BIDDING

GRANT COUNTY PUBLIC WORKS DEPARTMENT
124 ENTERPRISE ST. SE
EPHRATA, WASHINGTON 98823
(509) 754-6082 FAX (509) 754-6087

4-NE ROAD RECONSTRUCTION

CRP 16-09

DESIGNED BY:	BOB BERSANTI
CHECKED BY:	JEFF TINCHER
APPROVED BY:	JEFF TINCHER
REVISIONS BY:	
DATE REVISED:	4/30/2019
FEDERAL AID NO.:	

JEFFREY C. TINCHER
STATE OF WASHINGTON
42338
REGISTERED
PROFESSIONAL ENGINEER

DATE: 5/2/2019

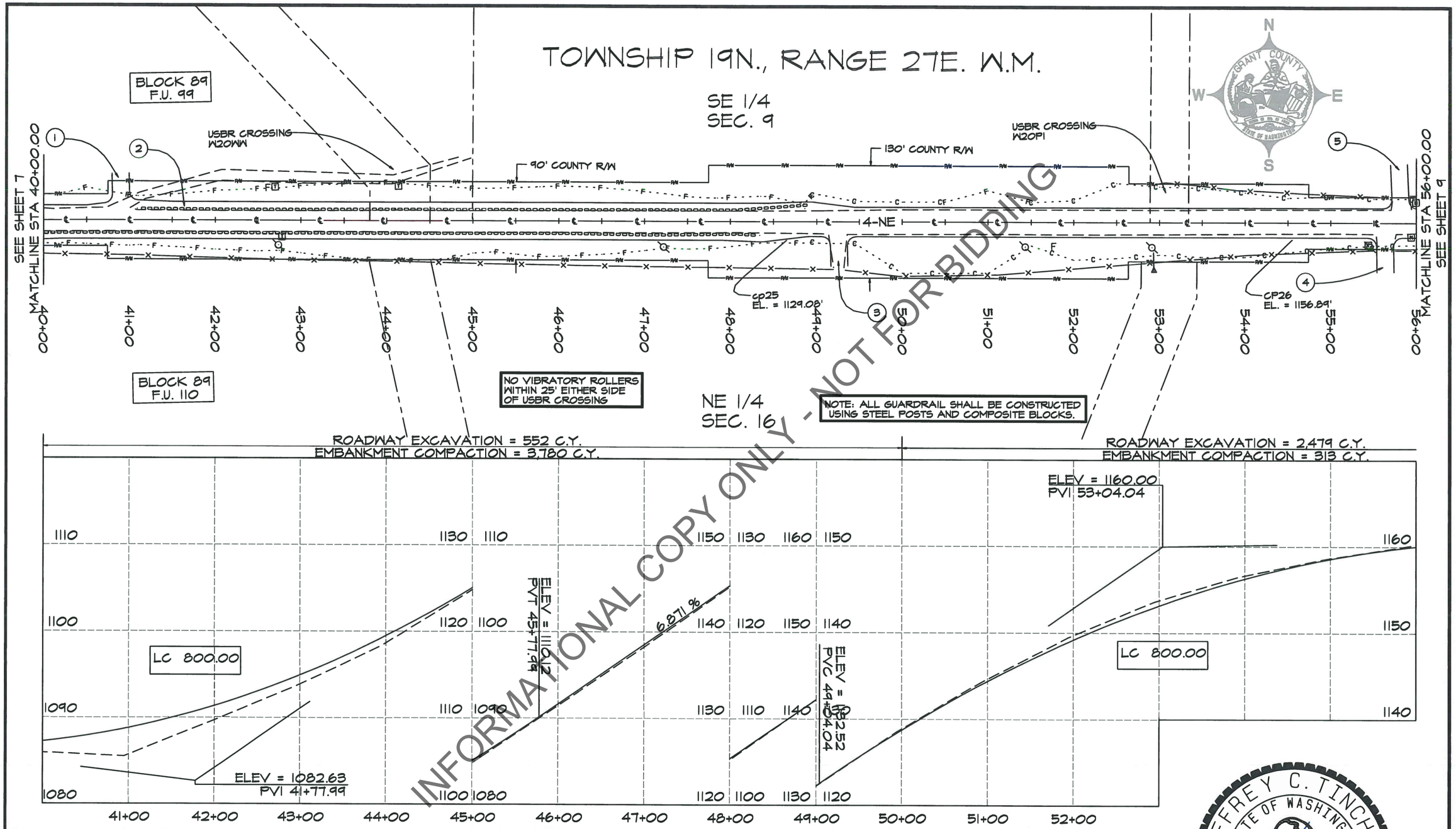

INFORMATIONAL COPY ONLY - NOT FOR BIDDING

GRANT COUNTY PUBLIC WORKS DEPARTMENT
124 ENTERPRISE ST. SE
EPHRATA, WASHINGTON 98823
(509) 754-6082 FAX (509) 754-6087

4-NE ROAD RECONSTRUCTION

CRP 16-09

DESIGNED BY:	BOB BERSANTI
CHECKED BY:	JEFF TINCHER
APPROVED BY:	JEFF TINCHER
REVISIONS BY:	
DATE REVISED:	4/30/2019
FEDERAL AID NO.:	

JEFFREY C. TINCHER
STATE OF WASHINGTON
42338
REGISTERED
PROFESSIONAL ENGINEER

DATE: 5/2/2019

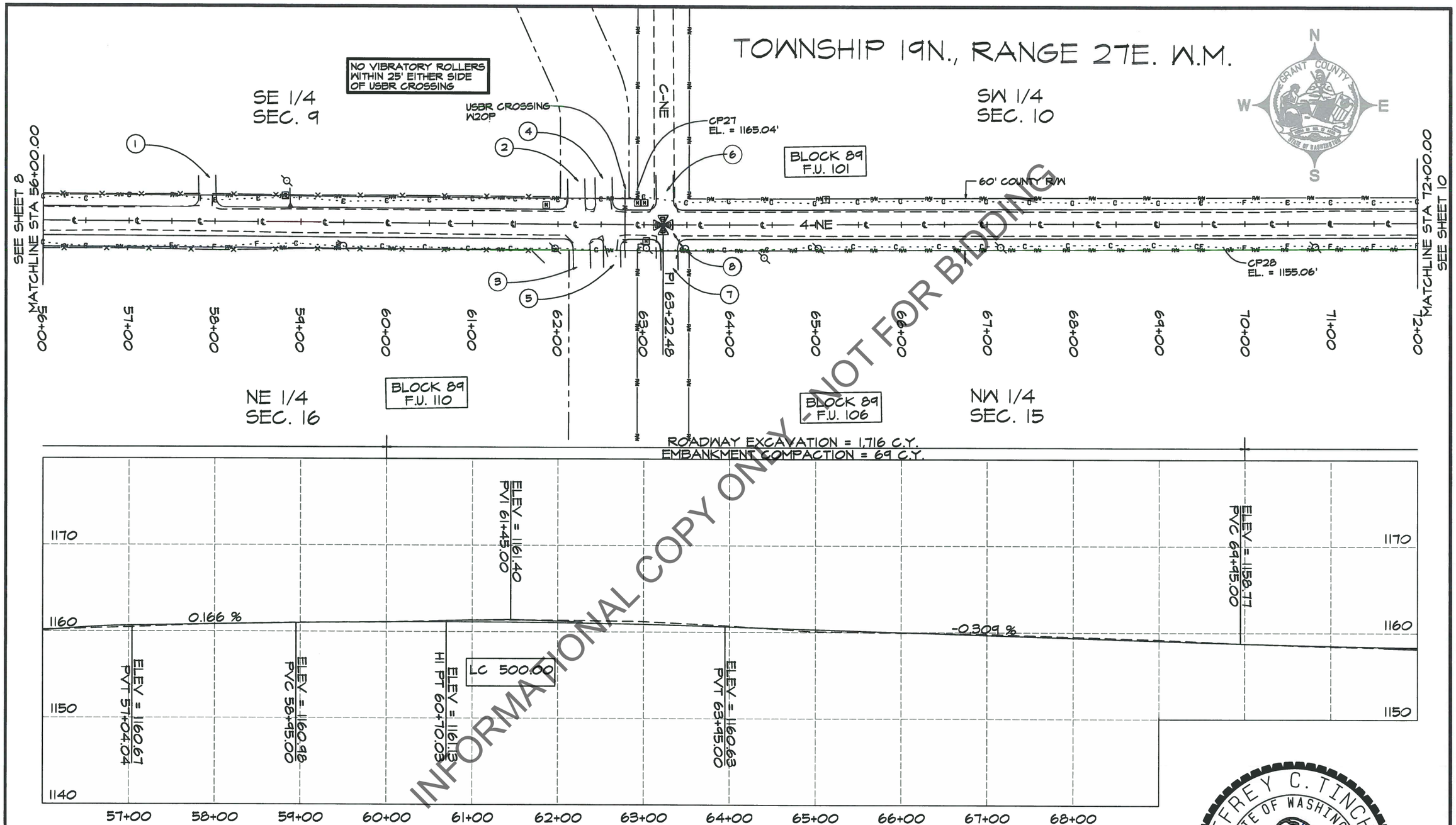

INFORMATIONAL COPY ONLY - NOT FOR BIDDING

GRANT COUNTY PUBLIC WORKS DEPARTMENT
124 ENTERPRISE ST. SE
EPHRATA, WASHINGTON 98823
(509) 754-6082 FAX (509) 754-6087

4-NE ROAD RECONSTRUCTION

CRP 16-09

DESIGNED BY:	BOB BERSANTI
CHECKED BY:	JEFF TINCHER
APPROVED BY:	JEFF TINCHER
REVISIONS BY:	
DATE REVISED:	4/30/2019
FEDERAL AID NO.:	

JEFFREY C. TINCHER
STATE OF WASHINGTON
42338
REGISTERED
PROFESSIONAL ENGINEER

DATE: 5/2/2019

TOWNSHIP 19N., RANGE 27E. W.M.

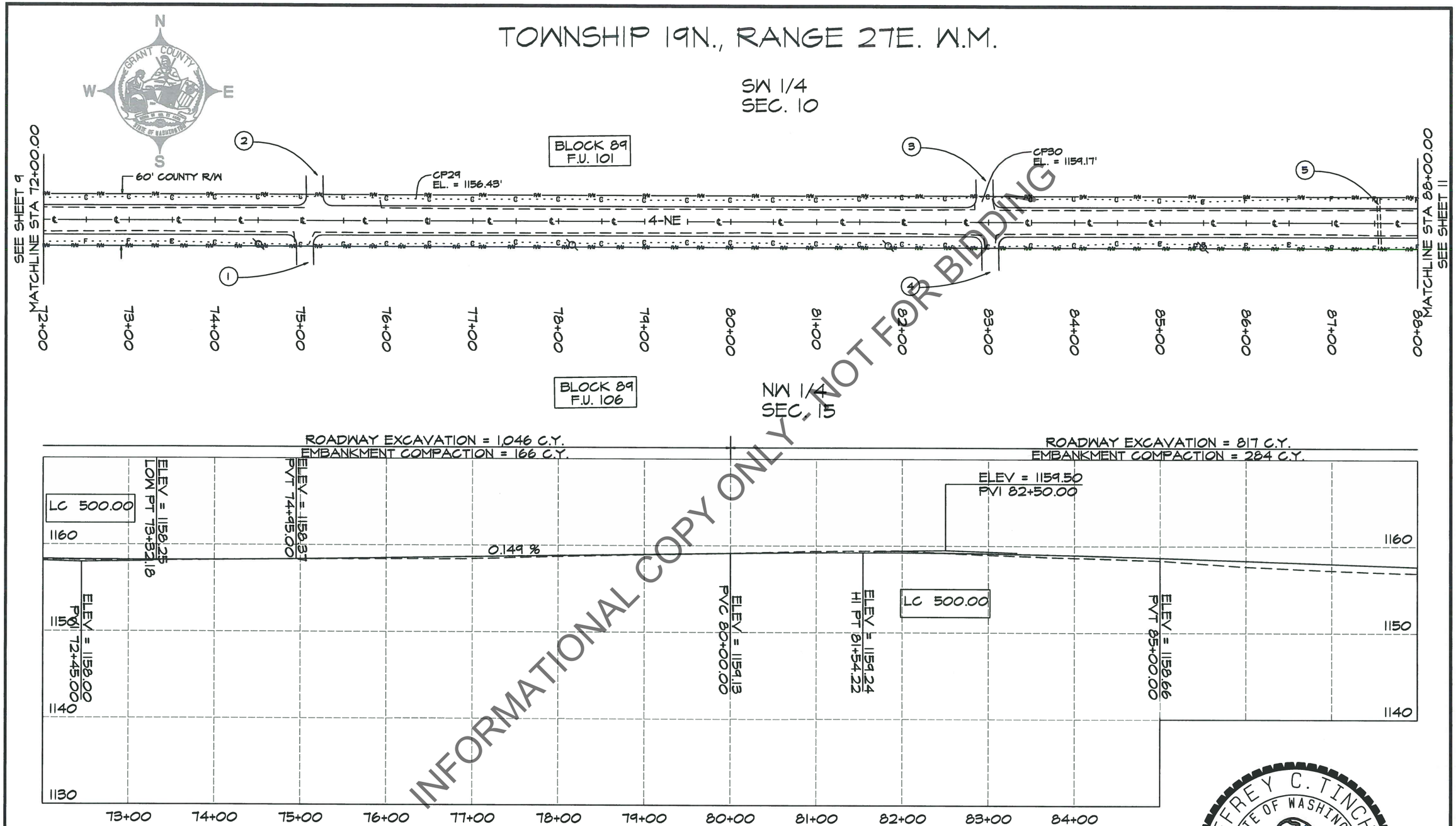

INFORMATIONAL COPY ONLY - NOT FOR BIDDING

GRANT COUNTY PUBLIC WORKS DEPARTMENT
124 ENTERPRISE ST. SE
EPHRATA, WASHINGTON 98823
(509) 754-6082 FAX (509) 754-6087

GRANT COUNTY
TERRA DE SOL ET AQUA
STATE OF WASHINGTON

4-NE ROAD RECONSTRUCTION

CRP 16-09

DESIGNED BY:	BOB BERSANTI
CHECKED BY:	JEFF TINCHER
APPROVED BY:	JEFF TINCHER
REVISIONS BY:	
DATE REVISED:	4/30/2019
FEDERAL AID NO.:	

JEFFREY C. TINCHER
STATE OF WASHINGTON
42338
REGISTERED
PROFESSIONAL ENGINEER

DATE: 5/2/2019

TOWNSHIP 19N., RANGE 27E. W.M.

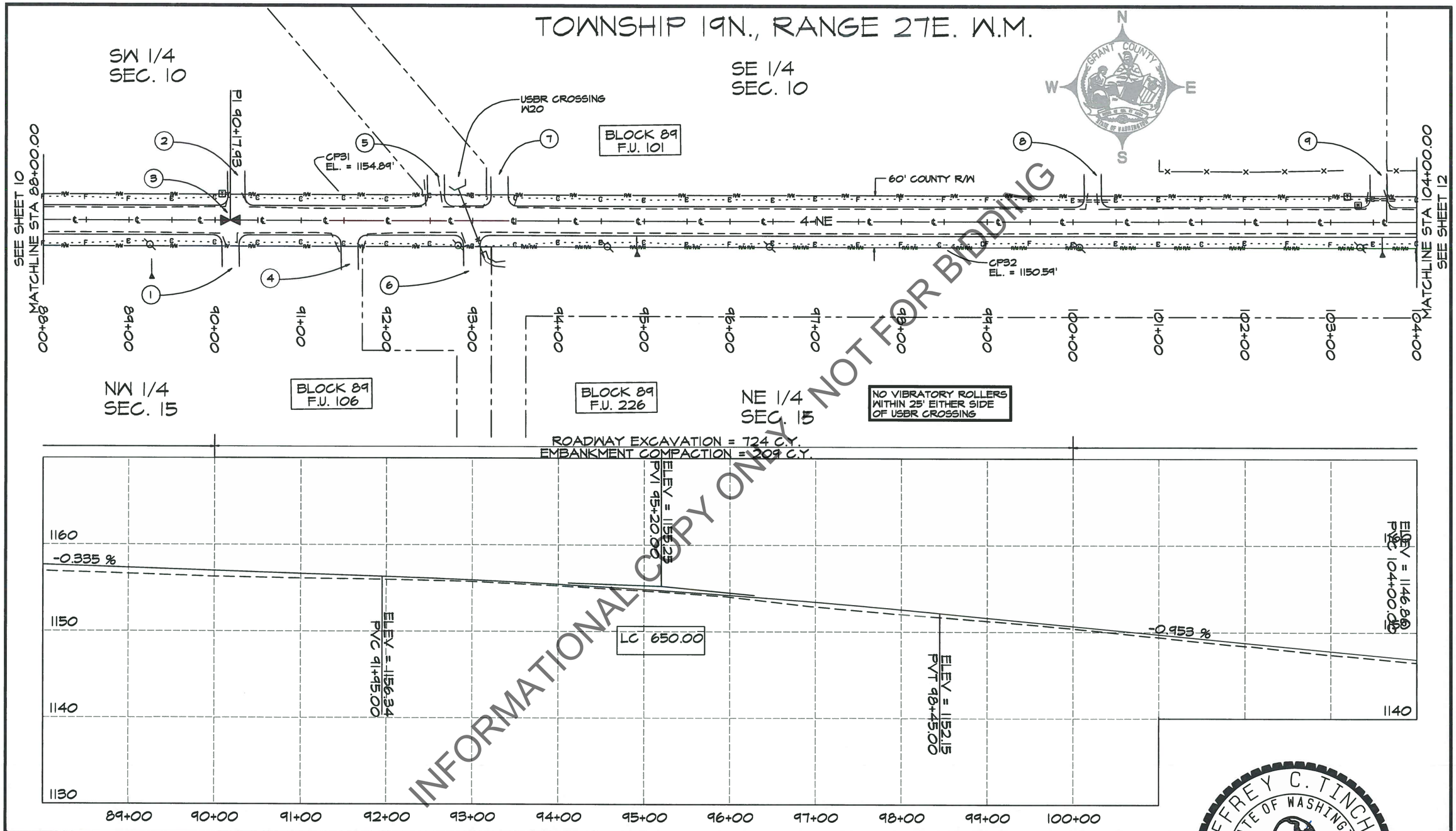

INFORMATIONAL COPY ONLY - NOT FOR BIDDING

GRANT COUNTY PUBLIC WORKS DEPARTMENT
124 ENTERPRISE ST. SE
EPHRATA, WASHINGTON 98823
(509) 754-6082 FAX (509) 754-6087

4-NE ROAD RECONSTRUCTION

CRP 16-09

DESIGNED BY:	BOB BERSANTI
CHECKED BY:	JEFF TINCHER
APPROVED BY:	JEFF TINCHER
REVISIONS BY:	
DATE REVISED:	4/30/2019
FEDERAL AID NO.:	

JEFFREY C. TINCHER
STATE OF WASHINGTON
42338
REGISTERED
PROFESSIONAL ENGINEER

DATE: 5/2/2019

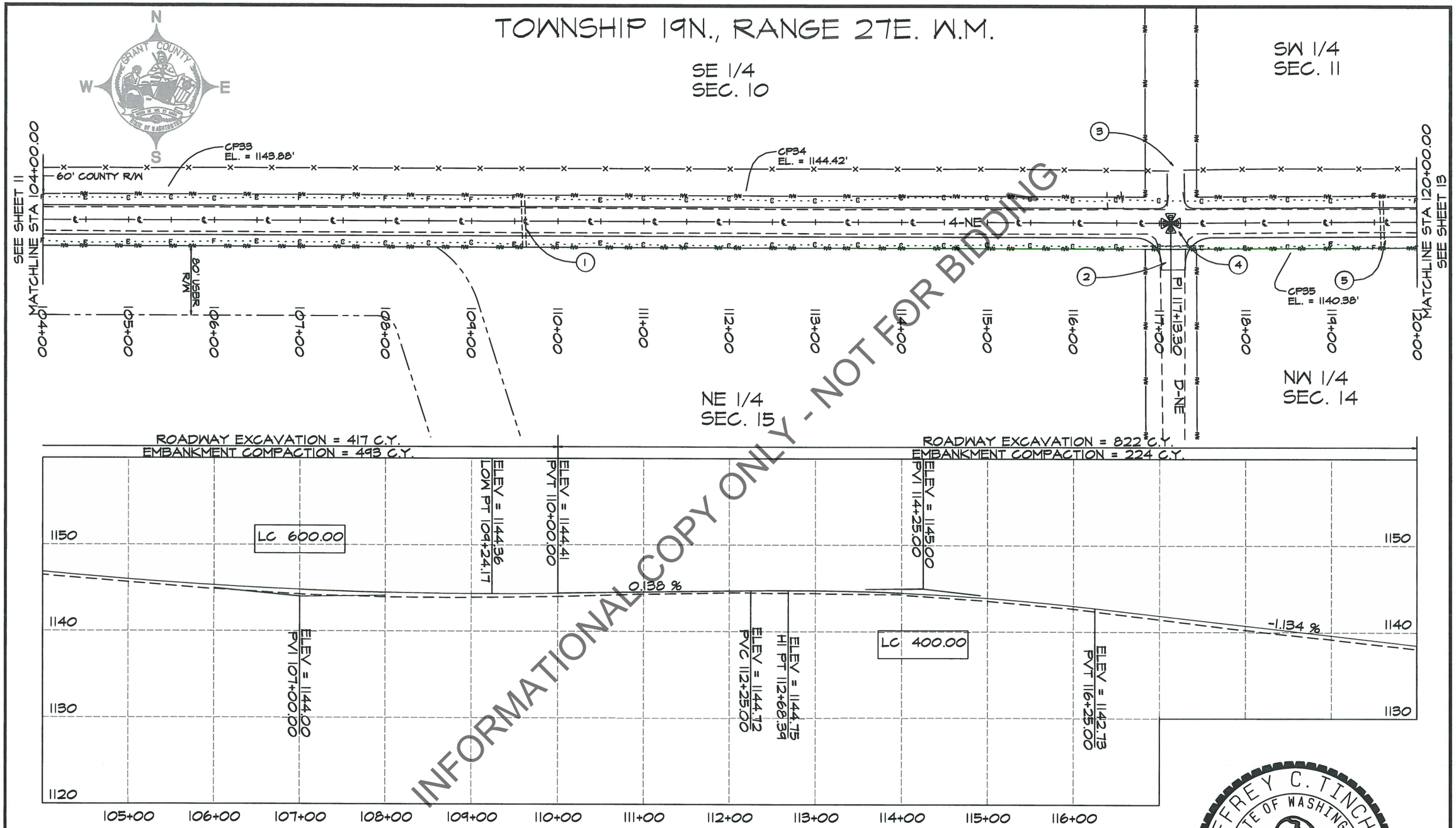

INFORMATIONAL COPY ONLY - NOT FOR BIDDING

GRANT COUNTY PUBLIC WORKS DEPARTMENT
124 ENTERPRISE ST. SE
EPHRATA, WASHINGTON 98823
(509) 754-6082 FAX (509) 754-6087

4-NE ROAD RECONSTRUCTION

CRP 16-09

DESIGNED BY:	BOB BERSANTI
CHECKED BY:	JEFF TINCHER
APPROVED BY:	JEFF TINCHER
REVISIONS BY:	
DATE REVISED:	4/30/2019
FEDERAL AID NO.:	

JEFFREY C. TINCHER
STATE OF WASHINGTON
42338
REGISTERED
PROFESSIONAL ENGINEER

DATE: 5/2/2019

TOWNSHIP 19N., RANGE 27E. W.M.

SW 1/4
SEC. 11

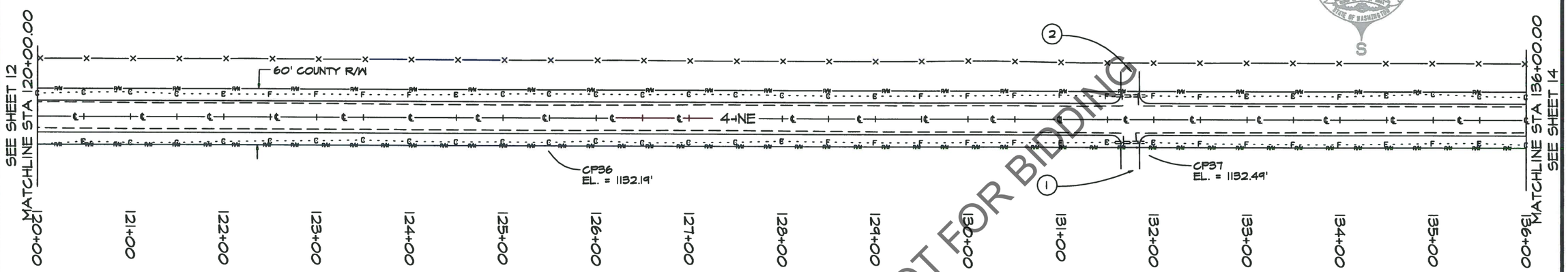

NW 1/4
SEC. 14

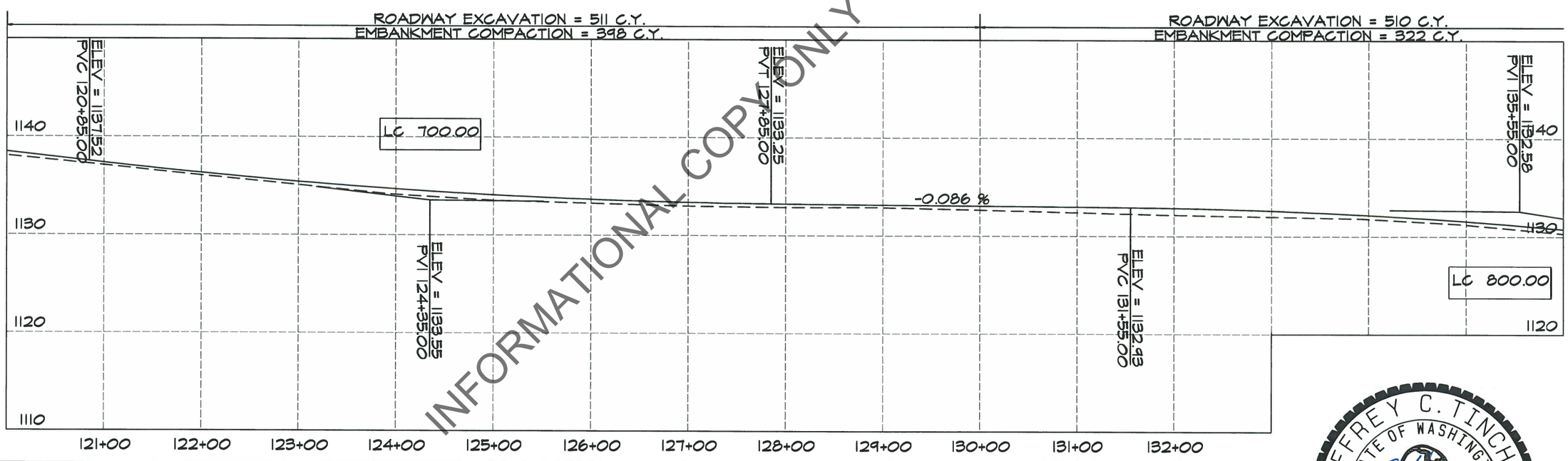

INFORMATIONAL COPY ONLY - NOT FOR BIDDING

GRANT COUNTY PUBLIC WORKS DEPARTMENT
124 ENTERPRISE ST. SE
EPHRATA, WASHINGTON 98823
(509) 754-6082 FAX (509) 754-6087

4-NE ROAD RECONSTRUCTION

CRP 16-09

DESIGNED BY:	BOB BERSANTI
CHECKED BY:	JEFF TINCHER
APPROVED BY:	JEFF TINCHER
REVISIONS BY:	
DATE REVISED:	4/30/2019
FEDERAL AID NO.:	

JEFFREY C. TINCHER
STATE OF WASHINGTON
42338
REGISTERED
PROFESSIONAL ENGINEER

DATE: 5/2/2019

TOWNSHIP 19N., RANGE 27E. W.M.

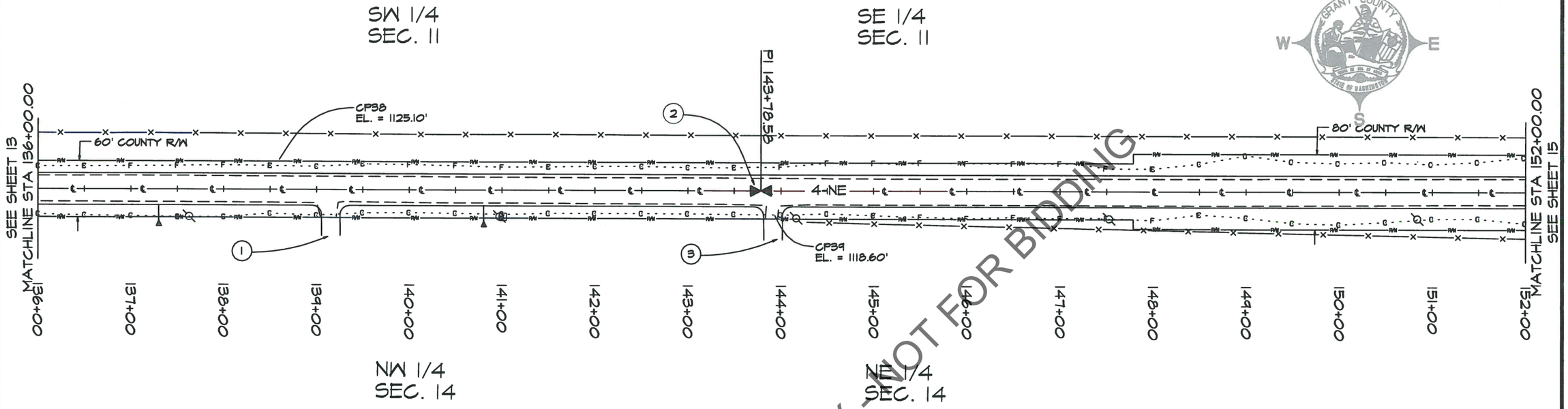

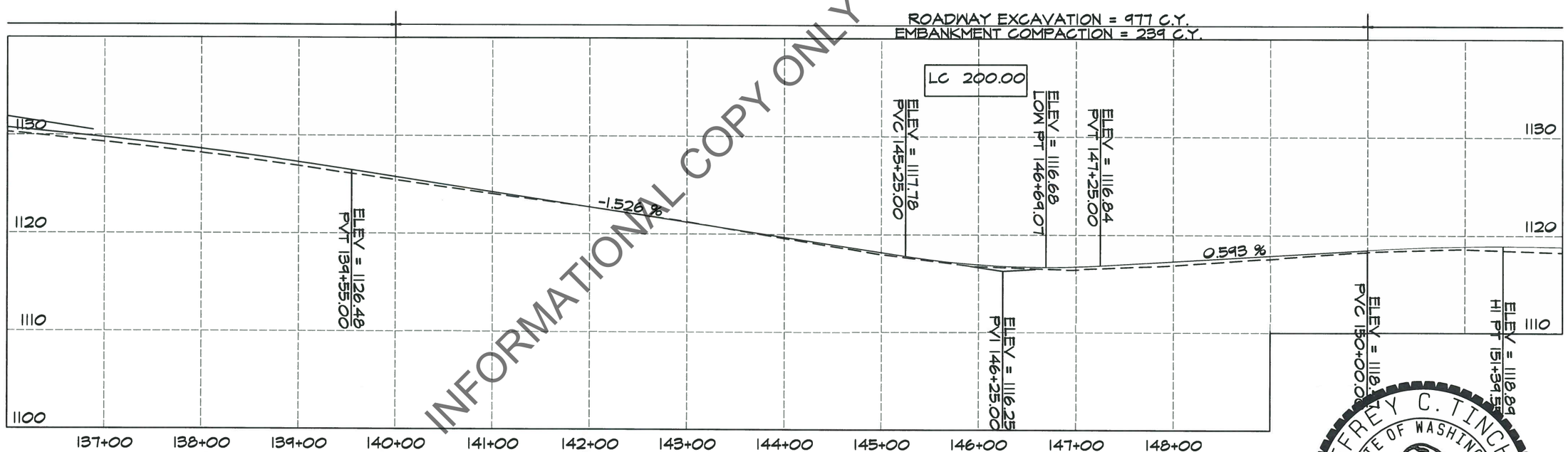

INFORMATIONAL COPY ONLY - NOT FOR BIDDING

GRANT COUNTY PUBLIC WORKS DEPARTMENT
124 ENTERPRISE ST. SE
EPHRATA, WASHINGTON 98823
(509) 754-6082 FAX (509) 754-6087

GRANT COUNTY
TERRA DE SOL ET AQUA
STATE OF WASHINGTON

4-NE ROAD RECONSTRUCTION

CRP 16-09

DESIGNED BY:	BOB BERSANTI
CHECKED BY:	JEFF TINCHER
APPROVED BY:	JEFF TINCHER
REVISIONS BY:	
DATE REVISED:	4/30/2019
FEDERAL AID NO.:	

JEFFREY C. TINCHER
STATE OF WASHINGTON
42338
REGISTERED
PROFESSIONAL ENGINEER

DATE: 5/2/2019

TOWNSHIP 19N., RANGE 27E. W.M.

SE 1/4
SEC. 11

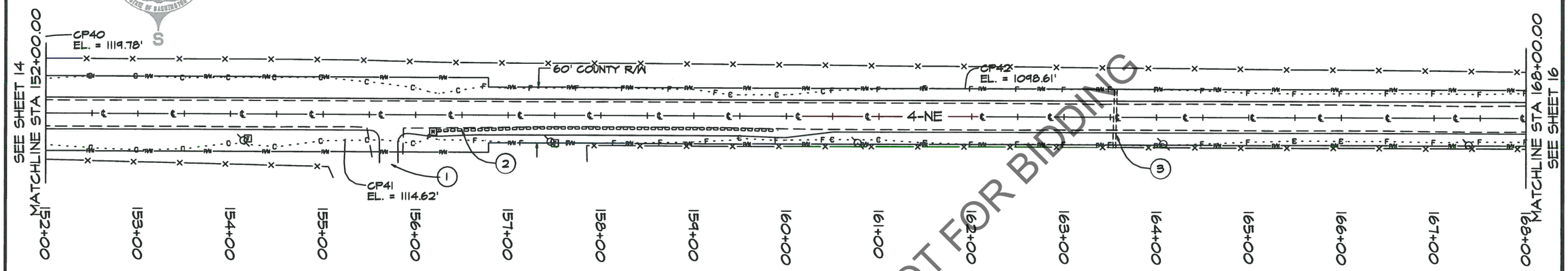

NOTE: ALL GUARDRAIL SHALL BE CONSTRUCTED USING STEEL POSTS AND COMPOSITE BLOCKS.

NE 1/4
SEC. 14

ROADWAY EXCAVATION = 1,483 C.Y.
EMBANKMENT COMPACTION = 673 C.Y.

ROADWAY EXCAVATION = 422 C.Y.
EMBANKMENT COMPACTION = 1,185 C.Y.

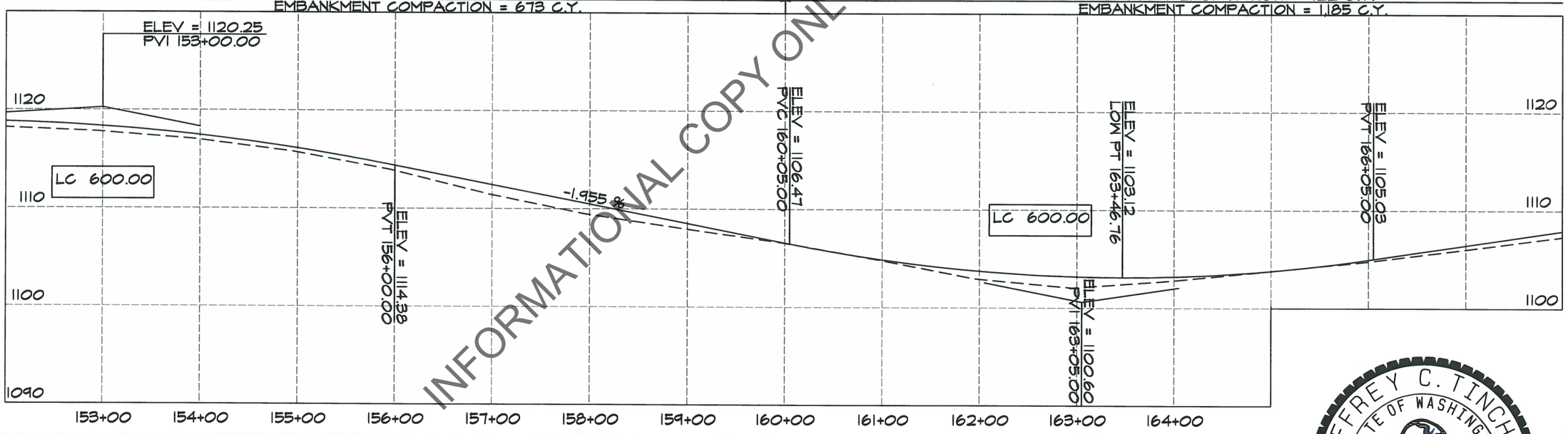

INFORMATIONAL COPY ONLY - NOT FOR BIDDING

GRANT COUNTY PUBLIC WORKS DEPARTMENT
124 ENTERPRISE ST. SE
EPHRATA, WASHINGTON 98823
(509) 754-6082 FAX (509) 754-6087

4-NE ROAD RECONSTRUCTION

CRP 16-09

DESIGNED BY:	BOB BERSANTI
CHECKED BY:	JEFF TINCHER
APPROVED BY:	JEFF TINCHER
REVISIONS BY:	
DATE REVISED:	4/30/2019
FEDERAL AID NO.:	

JEFFREY C. TINCHER
STATE OF WASHINGTON
42338
REGISTERED
PROFESSIONAL ENGINEER

DATE: 5/2/2019

TOWNSHIP 19N., RANGE 27E. W.M.

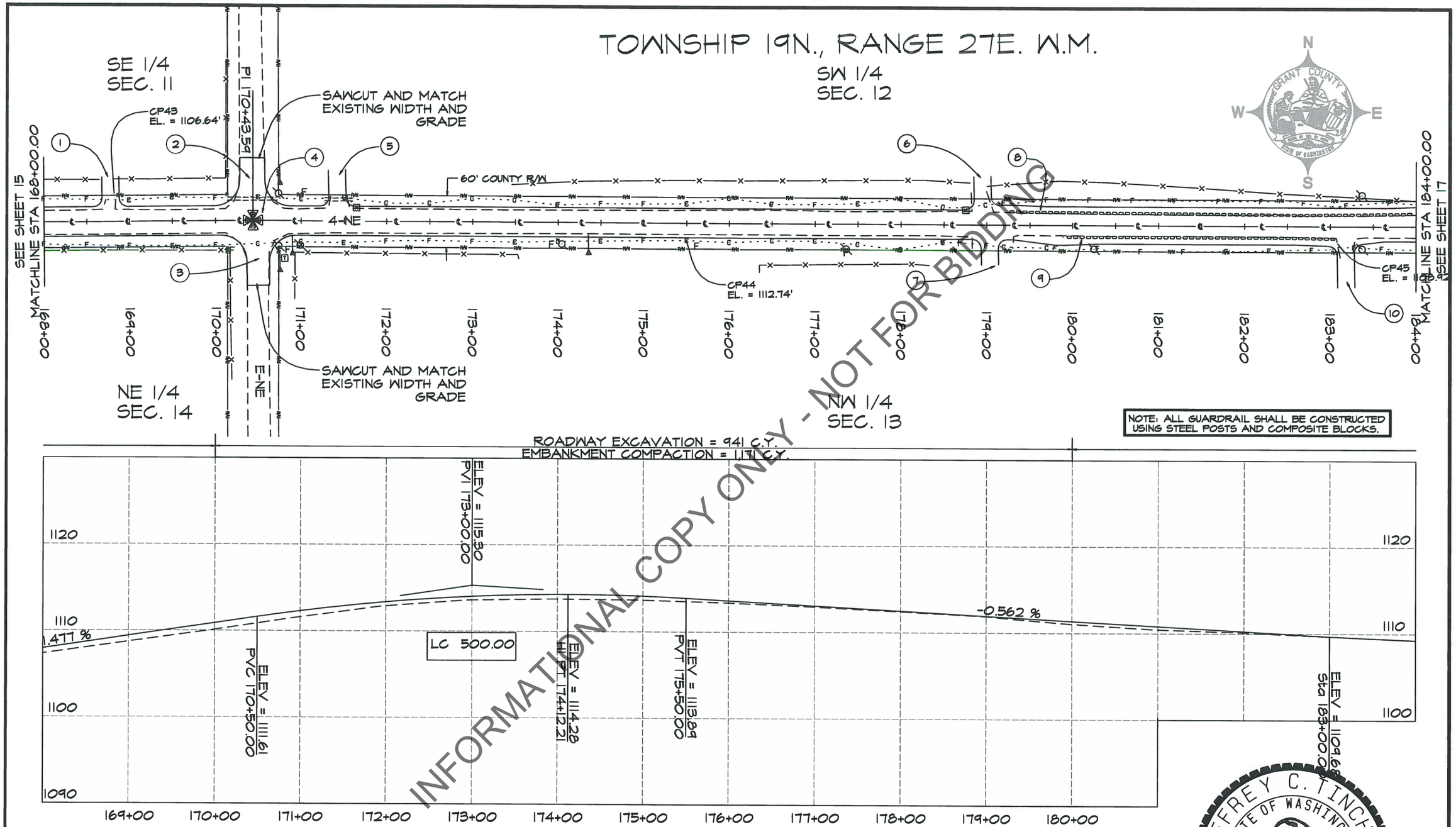

NOTE: ALL GUARDRAIL SHALL BE CONSTRUCTED USING STEEL POSTS AND COMPOSITE BLOCKS.

ROADWAY EXCAVATION = 941 C.Y.
EMBANKMENT COMPACTION = 1,171 C.Y.

INFORMATIONAL COPY ONLY - NOT FOR BIDDING

GRANT COUNTY PUBLIC WORKS DEPARTMENT
124 ENTERPRISE ST. SE
EPHRATA, WASHINGTON 98823
(509) 754-6082 FAX (509) 754-6087

4-NE ROAD RECONSTRUCTION

CRP 16-09

DESIGNED BY:	BOB BERSANTI
CHECKED BY:	JEFF TINCHER
APPROVED BY:	JEFF TINCHER
REVISIONS BY:	
DATE REVISED:	4/30/2019
FEDERAL AID NO.:	

JEFFREY C. TINCHER
STATE OF WASHINGTON
42338
REGISTERED
PROFESSIONAL ENGINEER

DATE: 5/2/2019

TOWNSHIP 19N., RANGE 27E. W.M.

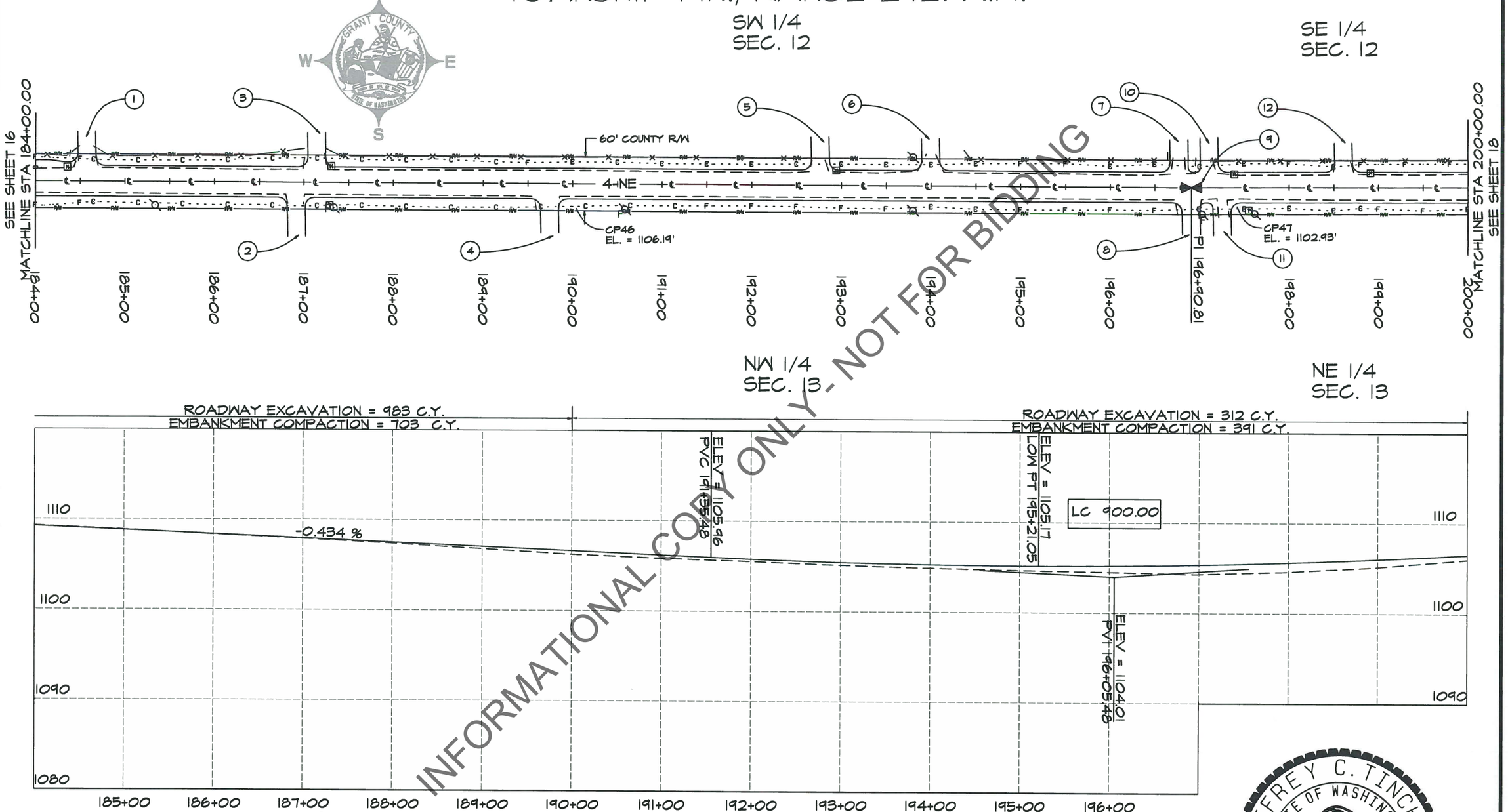

INFORMATIONAL COPY ONLY - NOT FOR BIDDING

GRANT COUNTY PUBLIC WORKS DEPARTMENT
124 ENTERPRISE ST. SE
EPHRATA, WASHINGTON 98823
(509) 754-6082 FAX (509) 754-6087

GRANT COUNTY
TIERRA DE SOL ET AQUA
STATE OF WASHINGTON

4-NE ROAD RECONSTRUCTION

CRP 16-09

DESIGNED BY:	BOB BERSANTI
CHECKED BY:	JEFF TINCHER
APPROVED BY:	JEFF TINCHER
REVISIONS BY:	
DATE REVISED:	4/30/2019
FEDERAL AID NO.:	

JEFFREY C. TINCHER
STATE OF WASHINGTON
42338
REGISTERED
PROFESSIONAL ENGINEER

DATE: 5/2/2019

TOWNSHIP 19N., RANGE 27E. W.M.

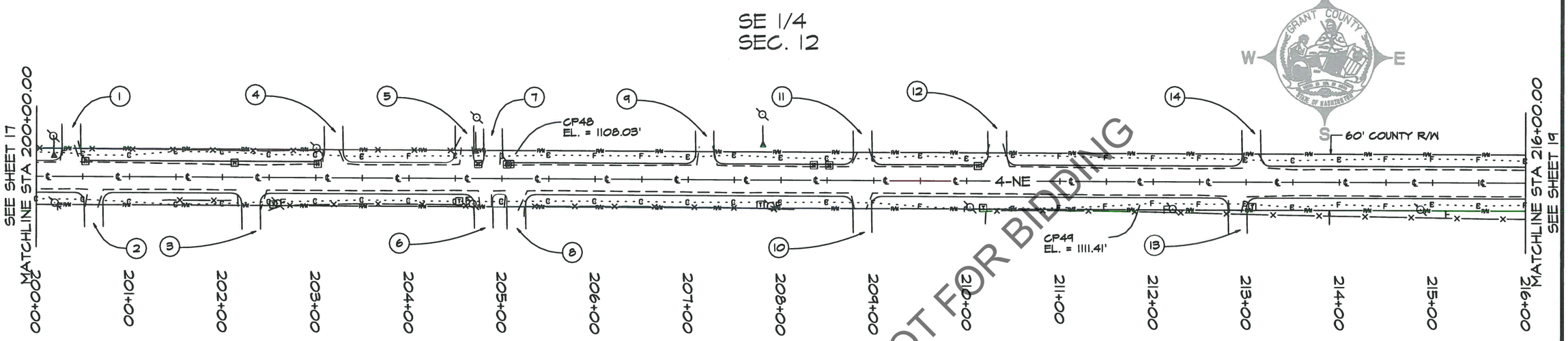

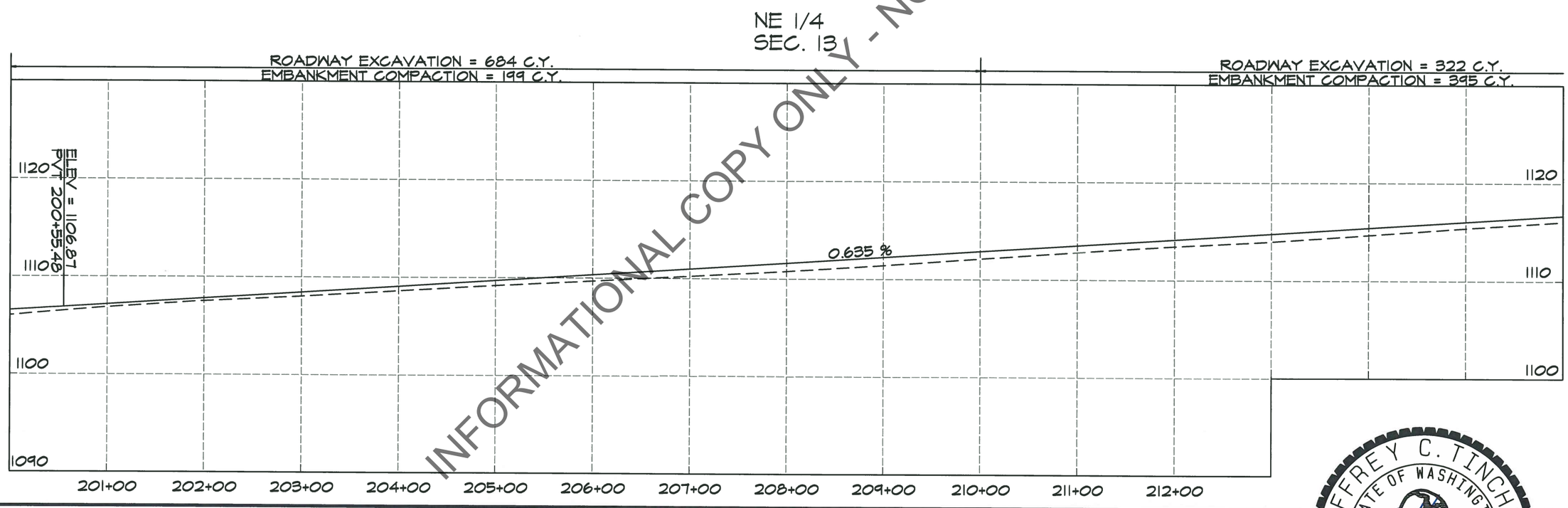

INFORMATIONAL COPY ONLY - NOT FOR BIDDING

GRANT COUNTY PUBLIC WORKS DEPARTMENT
124 ENTERPRISE ST. SE
EPHRATA, WASHINGTON 98823
(509) 754-6082 FAX (509) 754-6087

4-NE ROAD RECONSTRUCTION

CRP 16-09

DESIGNED BY:	BOB BERSANTI
CHECKED BY:	JEFF TINCHER
APPROVED BY:	JEFF TINCHER
REVISIONS BY:	
DATE REVISED:	4/30/2019
FEDERAL AID NO.:	

JEFFREY C. TINCHER
STATE OF WASHINGTON
42338
REGISTERED
PROFESSIONAL ENGINEER

DATE: 5/2/2019

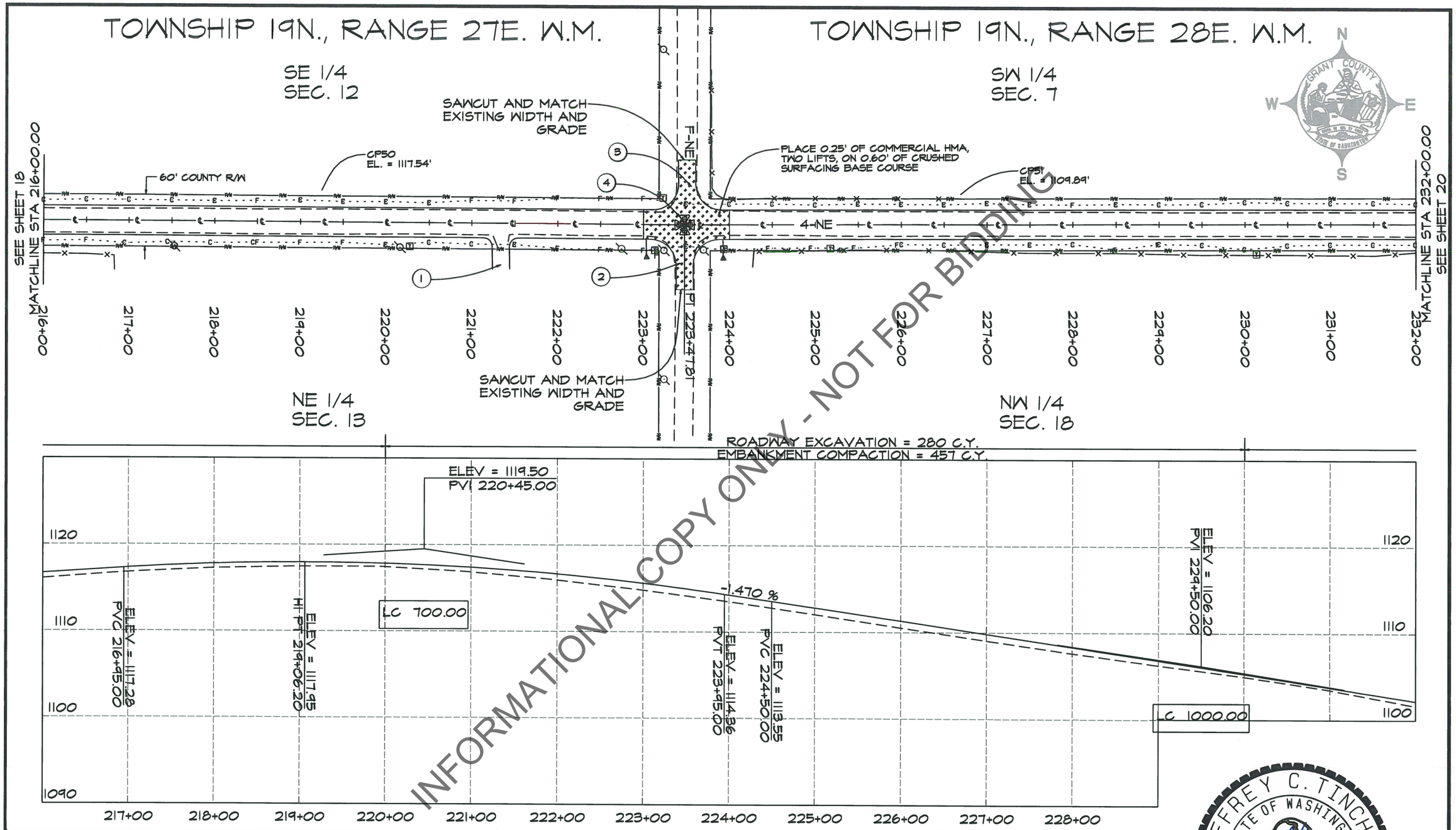

INFORMATIONAL COPY ONLY - NOT FOR BIDDING

GRANT COUNTY PUBLIC WORKS DEPARTMENT
124 ENTERPRISE ST. SE
EPHRATA, WASHINGTON 98823
(509) 754-6082 FAX (509) 754-6087

4-NE ROAD RECONSTRUCTION

CRP 16-09

DESIGNED BY:	BOB BERSANTI
CHECKED BY:	JEFF TINCHER
APPROVED BY:	JEFF TINCHER
REVISIONS BY:	
DATE REVISED:	4/30/2019
FEDERAL AID NO.:	

JEFFREY C. TINCHER
STATE OF WASHINGTON
42338
REGISTERED
PROFESSIONAL ENGINEER

DATE: 5/2/2019

TOWNSHIP 19N., RANGE 28E. W.M.

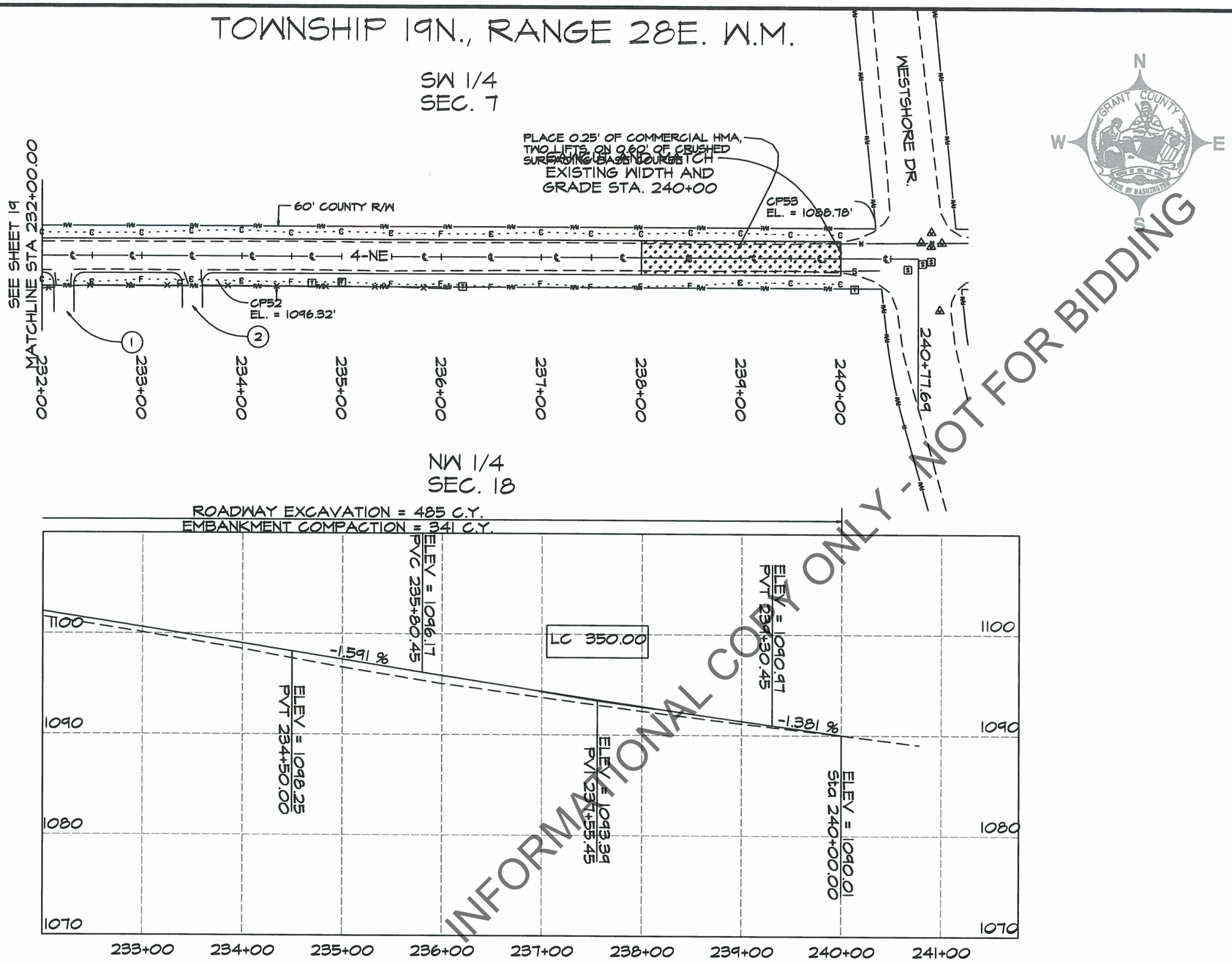

INFORMATIONAL COPY ONLY - NOT FOR BIDDING

GRANT COUNTY PUBLIC WORKS DEPARTMENT
124 ENTERPRISE ST. SE
EPHRATA, WASHINGTON 98823
(509) 754-6082 FAX (509) 754-6087

4-NE ROAD RECONSTRUCTION

CRP 16-09

DESIGNED BY:	BOB BERSANTI
CHECKED BY:	JEFF TINCHER
APPROVED BY:	JEFF TINCHER
REVISIONS BY:	
DATE REVISED:	4/30/2019
FEDERAL AID NO.:	

JEFFREY C. TINCHER
STATE OF WASHINGTON
42338
REGISTERED
PROFESSIONAL ENGINEER

DATE: 5/2/2019

TYPICAL ROADWAY SECTION "A"

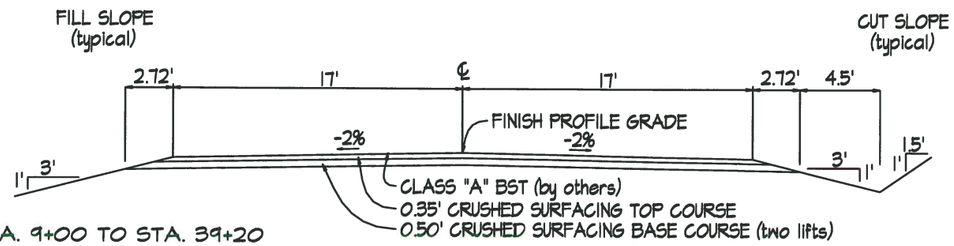

STA. 9+00 TO STA. 39+20
TRANSITION ROADWAY SECTION "A" STA 39+20 TO ROADWAY SECTION "B" STA. 39+70
STA. 56+00 TO STA. 155+65
TRANSITION ROADWAY SECTION "A" STA 155+65 TO ROADWAY SECTION "B" STA. 156+15
STA. 160+50 TO STA. 171+00
TRANSITION ROADWAY SECTION "A" STA 171+00 TO ROADWAY SECTION "F" STA. 172+00

ROADWAY SECTION "B"

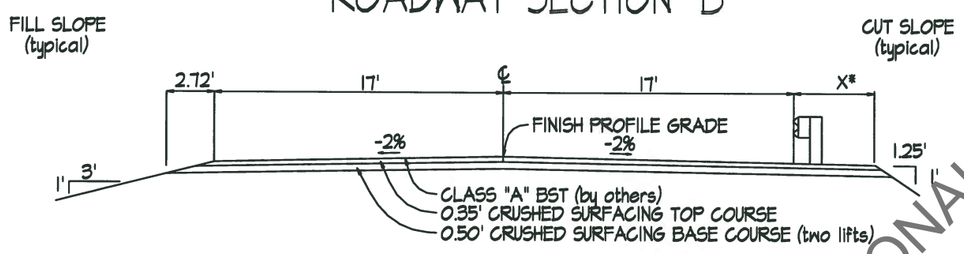

STATION	X
39+70	6'
39+80	6'
40+30	4'
156+15	6'
156+25	6'

STATION	X
156+75	4'
159+40	4'
159+90	6'
160+00	6'

TRANSITION ROADWAY SECTION "B" STA 40+30 TO ROADWAY SECTION "C" STA. 41+00
TRANSITION ROADWAY SECTION "B" STA 160+00 TO ROADWAY SECTION "A" STA. 160+50

ROADWAY SECTION "C"

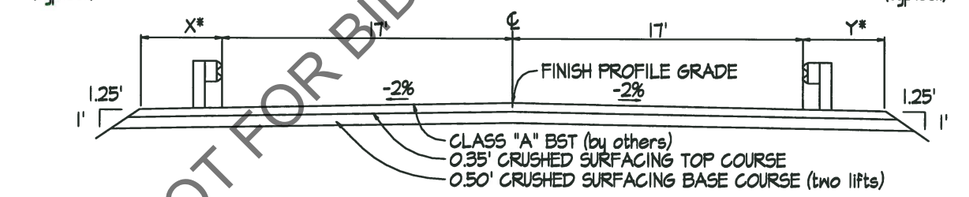

STATION	X	Y
41+00	4'	6'
41+10	4'	6'
41+60	4'	4'
47+85	4'	4'
48+35	4'	6'
48+45	4'	6'

STATION	X	Y
179+80	4'	6'
179+90	4'	6'
180+30	4'	4'
182+50	4'	4'
183+00	4'	6'
183+10	4'	6'

1:1 SLOPE
STA. 180+30 TO
STA. 183+10
RIGHT SIDE ONLY

TRANSITION ROADWAY SECTION "C" STA 48+45 TO ROADWAY SECTION "E" STA. 48+95
TRANSITION ROADWAY SECTION "C" STA 183+10 TO ROADWAY SECTION "E" STA. 183+60

INFORMATIONAL COPY ONLY - NOT FOR BIDDING

GRANT COUNTY PUBLIC WORKS DEPARTMENT
124 ENTERPRISE ST. SE
EPHRATA, WASHINGTON 98823
(509) 754-6082 FAX (509) 754-6087

4-NE ROAD RECONSTRUCTION

CRP 16-09

DESIGNED BY:	BOB BERSANTI
CHECKED BY:	JEFF TINCHER
APPROVED BY:	JEFF TINCHER
REVISIONS BY:	
DATE REVISED:	4/30/2019
FEDERAL AID NO.:	

JEFFREY C. TINCHER
STATE OF WASHINGTON
42338
REGISTERED
PROFESSIONAL ENGINEER

DATE: 5/2/2019

TYPICAL ROADWAY SECTION "D"

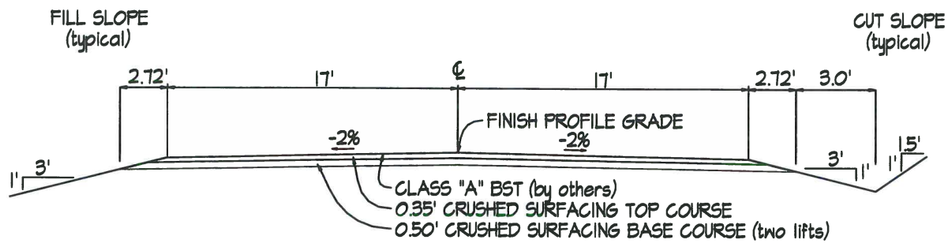

STA. 49+55 TO STA. 55+00
TRANSITION ROADWAY SECTION "D" STA 55+00 TO ROADWAY SECTION "A" STA. 56+00
STA. 184+70 TO STA. 240+00

ROADWAY SECTION "E"

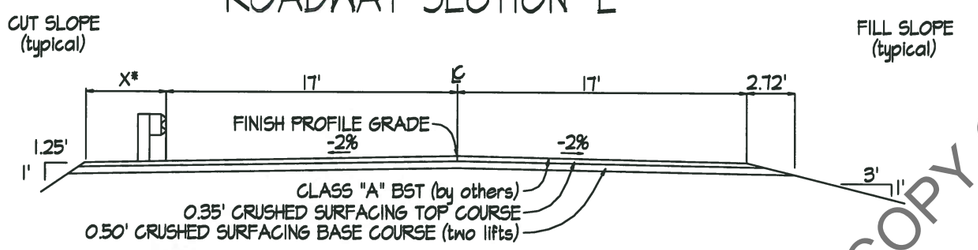

STATION	X
48+95	6'
49+05	6'
179+20	6'
179+30	6'
183+60	4'
184+10	6'
184+20	6'

TRANSITION ROADWAY SECTION "E" STA 49+05 TO ROADWAY SECTION "D" STA. 49+55
TRANSITION ROADWAY SECTION "E" STA 179+30 TO ROADWAY SECTION "C" STA. 179+80
TRANSITION ROADWAY SECTION "E" STA 184+20 TO ROADWAY SECTION "D" STA. 184+70

TYPICAL ROADWAY SECTION "F"

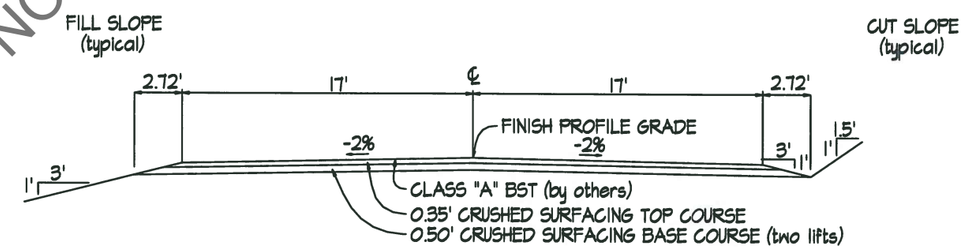

STA. 172+00 TO STA. 178+70
TRANSITION ROADWAY SECTION "F" STA 178+70 TO ROADWAY SECTION "E" STA. 179+20

INFORMATIONAL COPY ONLY - NOT FOR BIDDING

GRANT COUNTY PUBLIC WORKS DEPARTMENT
124 ENTERPRISE ST. SE
EPHRATA, WASHINGTON 98823
(509) 754-6082 FAX (509) 754-6087

4-NE ROAD RECONSTRUCTION

CRP 16-09

DESIGNED BY:	BOB BERSANTI
CHECKED BY:	JEFF TINCHER
APPROVED BY:	JEFF TINCHER
REVISIONS BY:	
DATE REVISED:	4/30/2019
FEDERAL AID NO.:	

JEFFREY C. TINCHER
STATE OF WASHINGTON
42338
REGISTERED
PROFESSIONAL ENGINEER

DATE: 5/2/2019

TYPICAL MONUMENT, CASE AND COVER DETAILS AND INSTALLATION

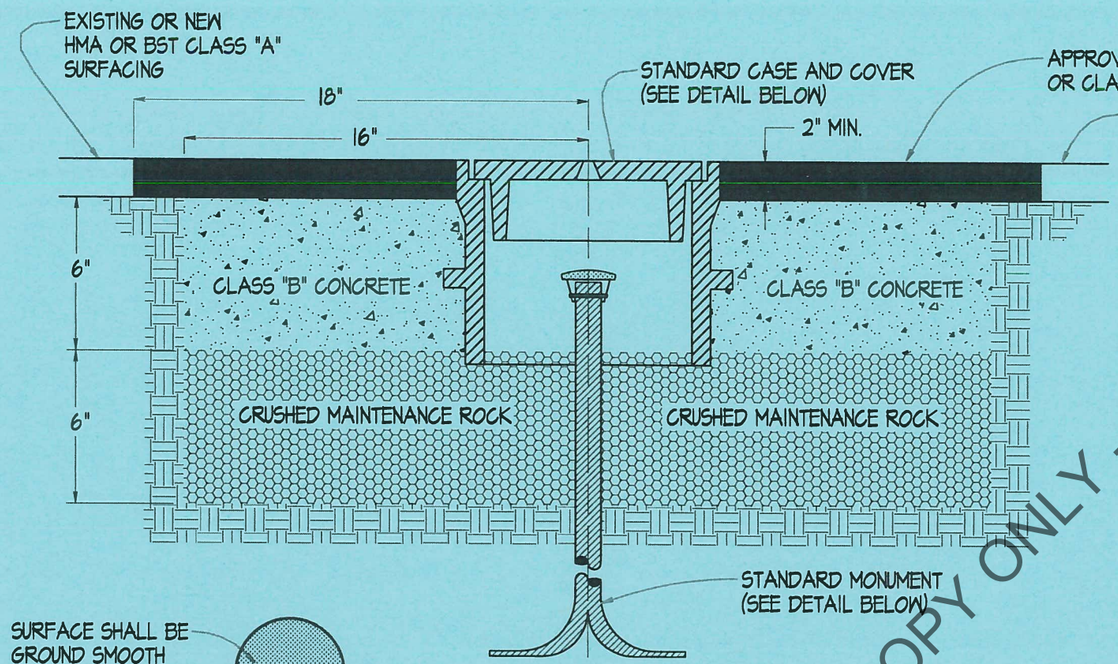

INSTALLATION

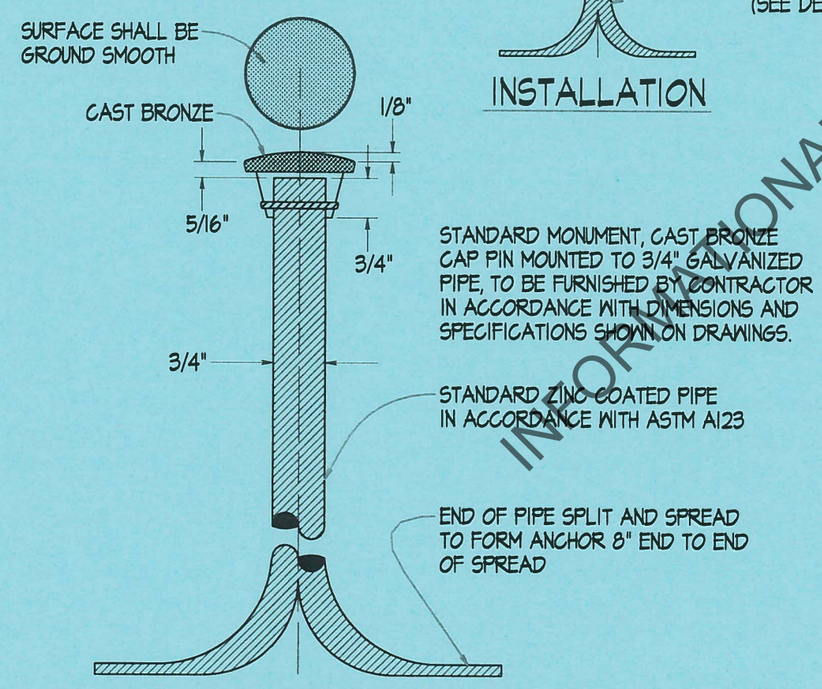

MONUMENT

NOTES:
COVER AND SEAT SHALL BE MACHINED SO AS TO HAVE PERFECT CONTACT AROUND THE ENTIRE CIRCUMFERENCE AND FULL WIDTH OF BEARING SURFACE.
SPECIFICATIONS:
MATERIAL - CAST IRON BODY AS PER ASTM. A48 CL. 40
APPROX. WEIGHT - BODY - 60LBS. COVER 20 LBS.

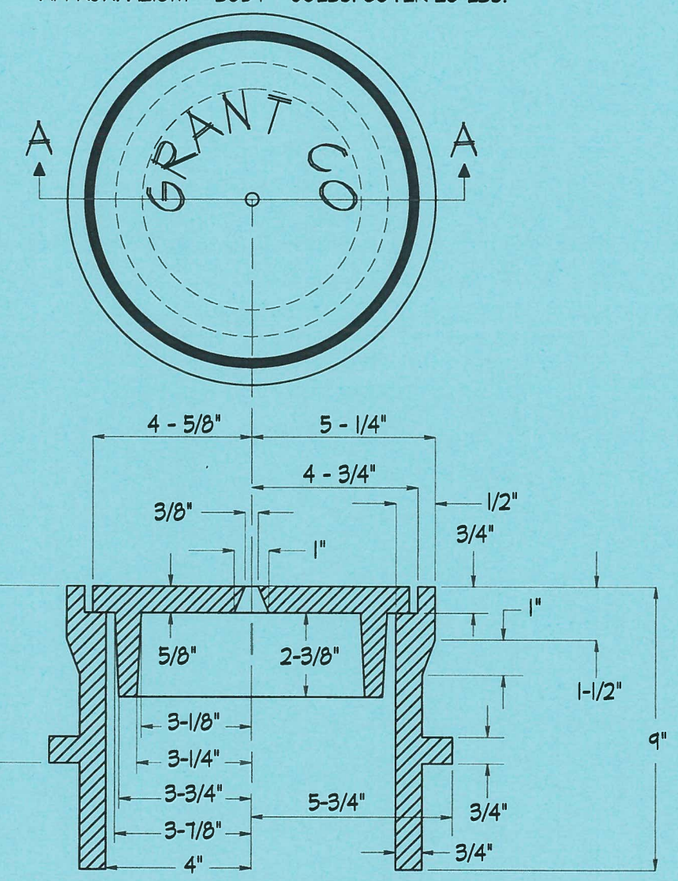

SECTION A-A

CASE AND COVER

INFORMATIONAL COPY ONLY - NOT FOR BIDDING

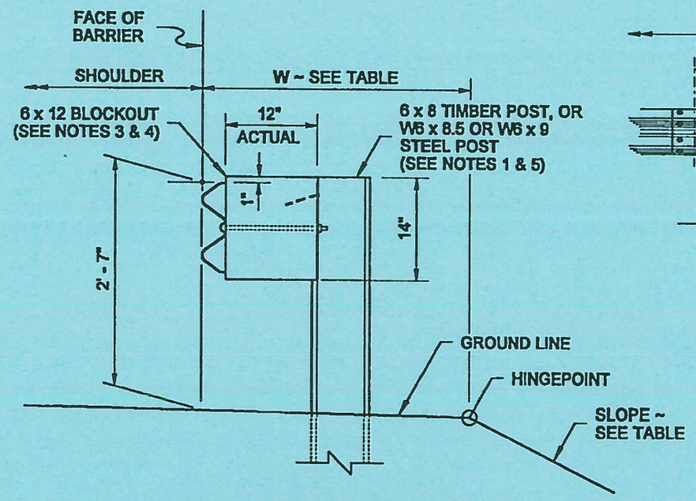

TYPICAL SECTION ~ WITHOUT CURB
(6' - 0" LONG POSTS)

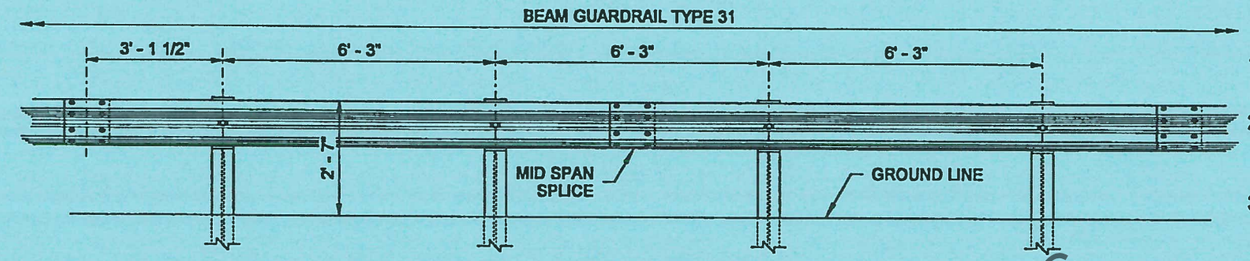

TYPICAL ELEVATION

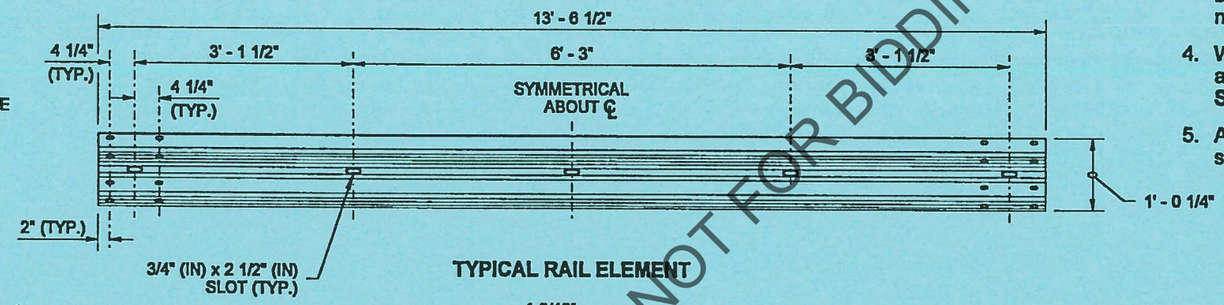

TYPICAL RAIL ELEMENT

NOTES

1. Refer to **Standard Plan C-1b** and **C-20.11** for additional details not shown on this plan.
2. Extend shoulder pavement to provide a base for the extruded curb. See Contract Plans for exceptions to distances shown.
3. Use a single block or combination of blocks (no more than two (2) to achieve the actual 12" (in) offset. See **Standard Specification Section 9-16.3(2)**. Wood blocks shall be secured to the posts with anti-rotation nails. If combination blocks are used, the adjacent blocks shall be toenailed with two 16d galvanized nails to prevent block rotation.
4. Wood blocks are shown. Blocks of an approved alternative material may be used. See **Standard Specification Section 9-16.3(2)**.
5. All posts for any standard barrier run shall be of the same type: timber or steel.

SLOPE \ EMBANKMENT TABLE	
SLOPE	W (FT)
2H : 1V OR FLATTER	2.5' MIN.
STEEPER THAN 2H : 1V BUT NOT STEEPER THAN 1H : 1V	4.0' MIN.

DRAWN BY: FERN LIDDELL

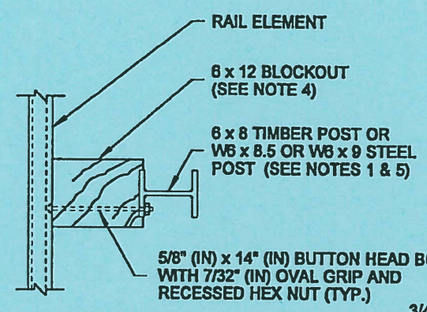

PLAN VIEW

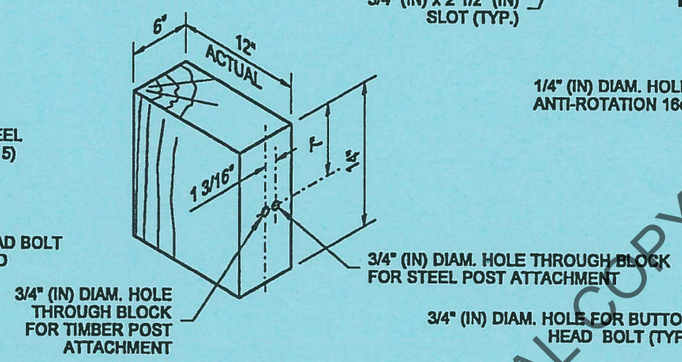

WOOD BLOCK

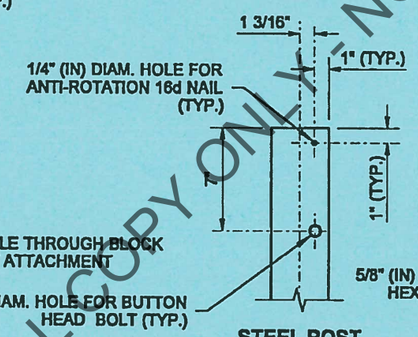

STEEL POST

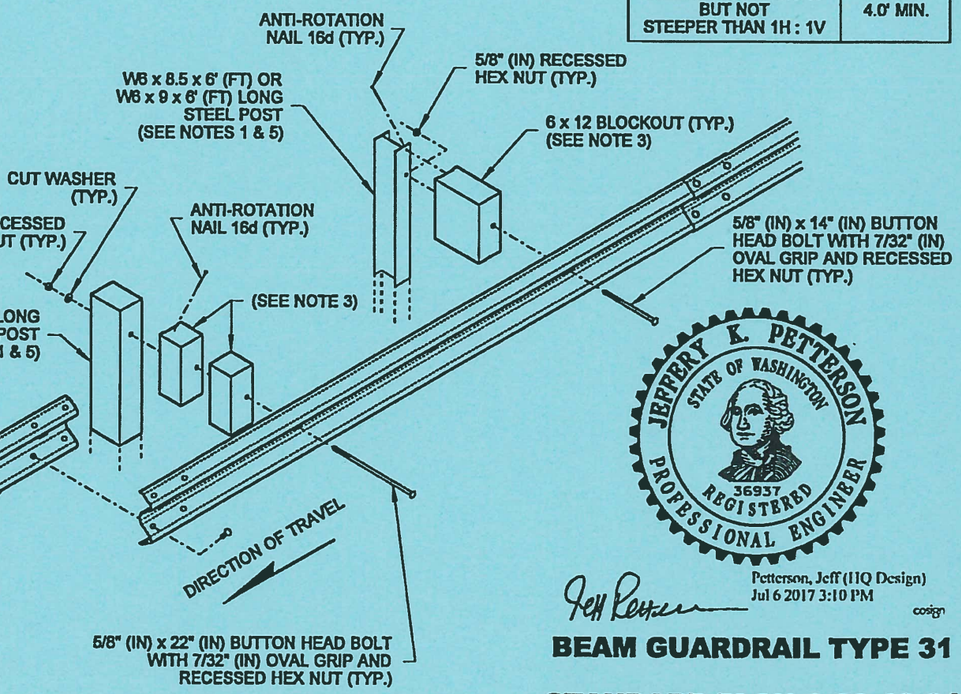

ISOMETRIC VIEW

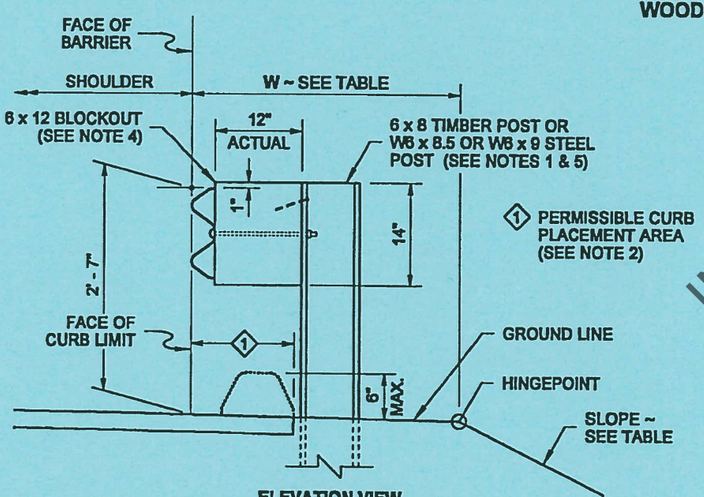

ELEVATION VIEW

TYPICAL SECTION ~ WITH CURB
(6' - 0" LONG POSTS)

INFORMATIONAL COPY ONLY ~ NOT FOR BIDDING

JEFFREY K. PETTERSON
STATE OF WASHINGTON
36937
REGISTERED
PROFESSIONAL ENGINEER

Petterson, Jeff (HQ Design)
Jul 6 2017 3:10 PM
cosign

BEAM GUARDRAIL TYPE 31

STANDARD PLAN C-20.10-04

SHEET 1 OF 1 SHEET

APPROVED FOR PUBLICATION
Carpenter, Jeff
Jul 21 2017 8:41 AM
cosign
STATE DESIGN ENGINEER
Washington State Department of Transportation

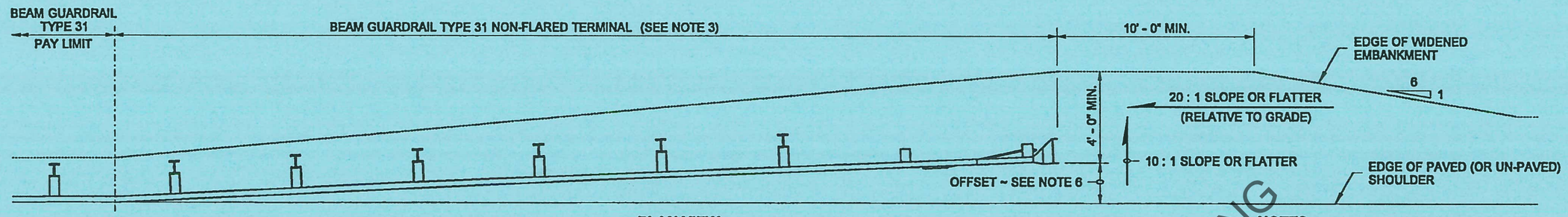

PLAN VIEW
MSKT-SP-MGS (TL-3) SHOWN

DRAWN BY: BILL BERENS

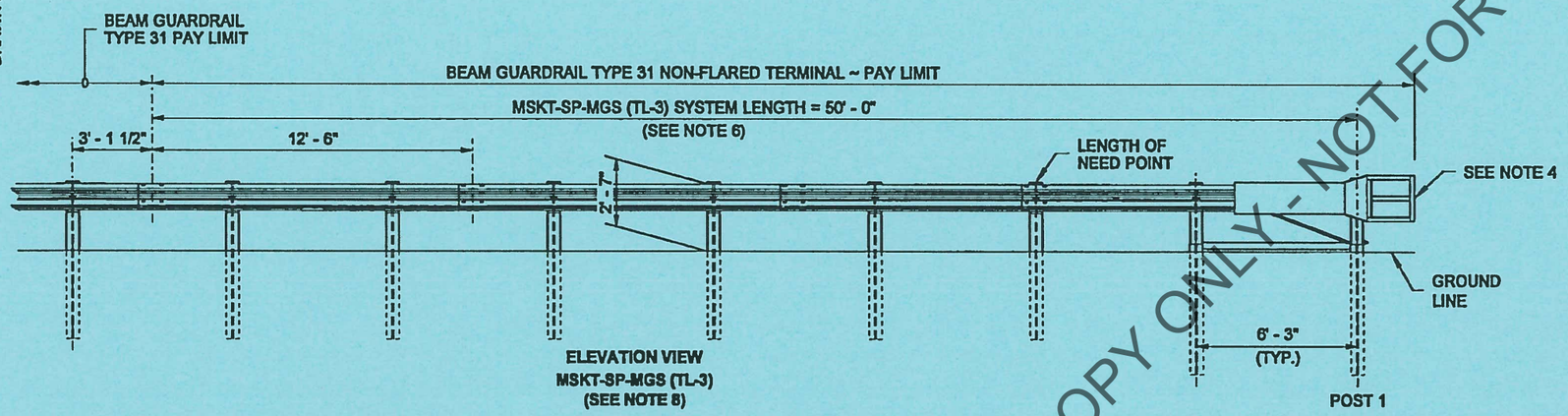

ELEVATION VIEW
MSKT-SP-MGS (TL-3)
(SEE NOTE 8)

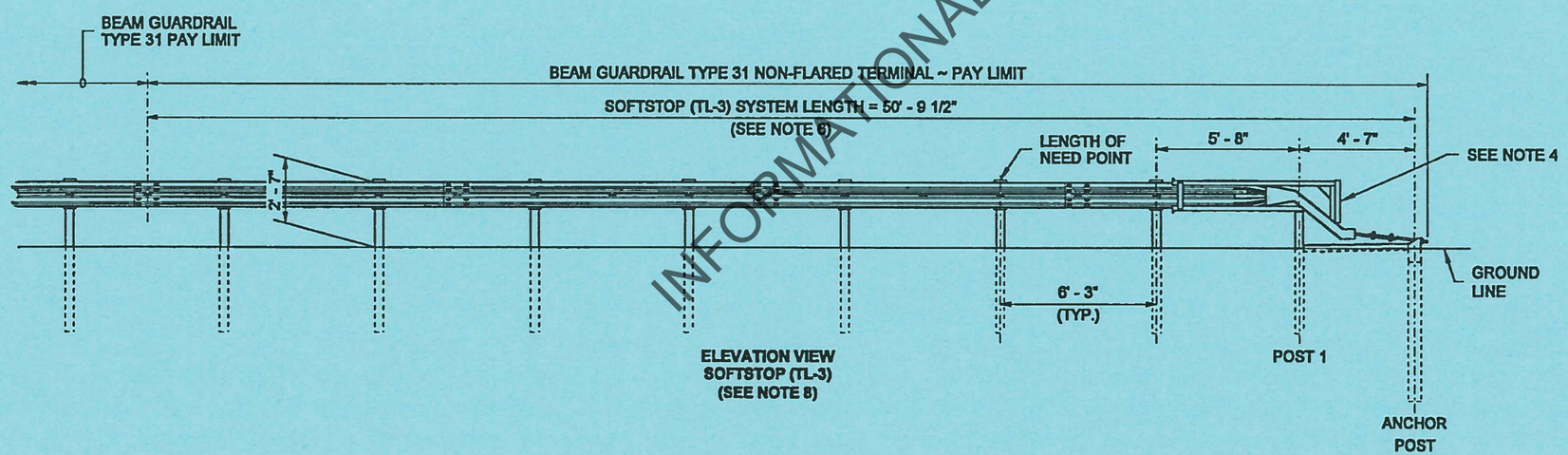

ELEVATION VIEW
SOFTSTOP (TL-3)
(SEE NOTE 8)

INFORMATIONAL COPY ONLY - NOT FOR BIDDING

NOTES

1. The Implementation of the Manual for Assessment of Safety Hardware (MASH) criteria may result in the acceptance of guardrail terminal systems currently not shown on this plan. Non-Flared terminals shall be selected from the WSDOT Qualified Products List (QPL) or approved through the WSDOT Request for Approval of Materials (RAM) process.

2. This terminal is MASH compliant at Test Level Three (TL-3) and may be used for all posted speeds.

3. An MSKT-SP-MGS (TL-3) as manufactured by Road Systems, Inc. or SOFTSTOP (TL-3) as manufactured by Trinity Highway Products, LLC shall be installed according to manufacturer's recommendations.

4. A reflectorized object marker shall be installed according to manufacturer's recommendations.

5. When snow load post washers and snow load rail washers are required by the Contract, the snow load rail washers shall not be installed within the terminal limits.

6. Terminal shall be installed at a widening, ensuring the end piece is entirely off the shoulder. While this terminal does not require an offset at the end, a taper is recommended. For the MSKT-SP-MGS (TL-3), a maximum taper of 25 : 1 or flatter over the length of the terminal is allowed with a maximum offset of 24" (in) over 50' (ft).

   For the SOFTSTOP (TL-3) a maximum taper of 25.4 : 1 or flatter is allowed over the system length of 50' - 9 1/2" with a maximum offset of 24" (in) at the anchor post.

7. For terminal details, see WSDOT approved manufacturer's drawings.

8. These terminals are supplied with steel posts only. They can be used with beam guardrail Type 31 runs composed of steel or wood guardrail posts.

JEFFERY K. PETTERSON
STATE OF WASHINGTON
36937
REGISTERED
PROFESSIONAL ENGINEER

Petterson, Jeff (IIQ Design)
Jul 6 2017 3:13 PM

BEAM GUARDRAIL TYPE 31 NON-FLARED TERMINAL (ALL POSTED SPEEDS) STANDARD PLAN C-22.40-06

SHEET 1 OF 1 SHEET

APPROVED FOR PUBLICATION
Carpenter, Jeff
Jul 21 2017 8:26 AM
STATE DESIGN ENGINEER
Washington State Department of Transportation