Ephrata Landfill
MPE Pilot Study Interim Action
Pretreatment Facility and Evaporation Pond
Specifications

Prepared for

Grant County Public Works Department *and* City of Ephrata

June 2016

Prepared by

Parametrix

INFORMATIONAL COPY ONLY, NOT FOR BIDDING

Ephrata Landfill
MPE Pilot Study Interim Action
Pretreatment Facility and Evaporation Pond
Specifications

INFORMATIONAL COPY ONLY - NOT FOR BIDDING

Prepared for

Grant County Public Works Department
124 Enterprise Street SE
Ephrata, WA 98823

and

City of Ephrata
121 Alder Street SW
Ephrata, WA 98823

Prepared by

Parametrix
719 2nd Avenue, Suite 200
Seattle, WA 98104
T. 206.394.3700 F.1.855.542.6353
www.parametrix.com

In association with

Pacific Groundwater Group
2377 Eastlake Avenue East
Seattle, WA 98102
T. 206.329.0141
www.pgwg.com

June 2016

PMX No. 555-1860-012

CITATION

Parametrix. 2016. Ephrata Landfill MPE Pilot Study Interim Action Pretreatment Facility and Evaporation Pond Specifications. Prepared by Parametrix, Seattle, Washington, and Pacific Groundwater Group, Seattle, Washington. June 2016.

INFORMATIONAL COPY ONLY - NOT FOR BIDDING

CERTIFICATION

The technical material and data contained in this document were prepared under the supervision and direction of the undersigned, whose seal, as a professional engineer licensed to practice as such, is affixed below.

STEPHEN M. EMGE
STATE OF WASHINGTON
34389
REGISTERED
PROFESSIONAL ENGINEER

IAN K. SUTTON
STATE OF WASHINGTON
40529
REGISTERED
PROFESSIONAL ENGINEER

Prepared by Stephen M. Emge, P.E.
WSDOT Divisions 2 through 9

Prepared by Ian Sutton, P.E.
Section 13 34 20

INFORMATIONAL COPY ONLY - NOT FOR BIDDING

This Page Intentionally Left Blank

INFORMATIONAL COPY ONLY - NOT FOR BIDDING

CERTIFICATION

The technical material and data contained in this document were prepared under the supervision and direction of the undersigned, whose seal, as a professional engineer licensed to practice as such, is affixed below.

Prepared by Brandon Ball, P.E.
Divisions 22, 40 (except Section 40 95 73), 42, and 43

INFORMATIONAL COPY ONLY - NOT FOR BIDDING

This Page Intentionally Left Blank

INFORMATIONAL COPY ONLY - NOT FOR BIDDING

CERTIFICATION (CONTINUED)

The technical material and data contained in this document were prepared under the supervision and direction of the undersigned, whose seal, as a professional engineer licensed to practice as such, is affixed below.

STEVEN ALAN WAGNER
STATE OF WASHINGTON
18711
STRUCTURAL ENGINEER
PROFESSIONAL ENGINEER

6-2-2016

Prepared by Steven A. Wagner, P.E., S.E.
Divisions 03, 06, 07, 08, 09, and 31; and
Sections 13 05 41 and 13 34 19

MICHAEL JAMES LUBOVICH
STATE OF WASHINGTON
50596
REGISTERED
PROFESSIONAL ENGINEER

6-2-2016

Prepared by Michael James Lubovich, P.E.
Division 23

GARY B. WHITE
STATE OF WASHINGTON
20883
REGISTERED
PROFESSIONAL ENGINEER

6-2-16

Prepared by Gary B. White, P.E.
Division 26 and Section 40 95 73

INFORMATIONAL COPY ONLY NOT FOR BIDDING

This Page Intentionally Left Blank

INFORMATIONAL COPY ONLY - NOT FOR BIDDING

CERTIFICATION (CONTINUED)

The technical material and data contained in this document were checked and approved by the individuals and noted below.

Checked by Ian Sutton, P.E.
WSDOT Divisions 2 through 9

Checked by Joseph R. Merth, P.E.
Divisions 03, 06, 07, 08, 09, and 31; and Sections 13 05 41 and 13 34 19

Checked by Brian Pippin, P.E.
Divisions 22, 23, 40 (except Section 40 95 73), 42, and 43; and Section 13 34 20

Checked by Oskar K. Agustsson, P.E.
Division 26 and Section 40 95 73

Approved by Brian Pippin, P.E.

INFORMATIONAL COPY ONLY - NOT FOR BIDDING

This Page Intentionally Left Blank

INFORMATIONAL COPY ONLY - NOT FOR BIDDING

This Page Intentionally Left Blank

INFORMATIONAL COPY ONLY - NOT FOR BIDDING

GRANT COUNTY
PUBLIC WORKS DEPARTMENT

Jeff Tincher, P.E.
Director of Public Works and
County Road Engineer
Ephrata (509) 754-6082

Jerome Wawers
Assistant Director of Public Works
Ephrata (509) 754-6082

Bob Bersanti
Design/Construction Engineer
Ephrata (509) 754-6082

Janice Goeden, Supervisor
Solid Waste
Ephrata, (509) 754-4319

Ed Lowry
Supervisor
Road District #1
Ephrata (509) 754-6586

Dennis Collier, Supervisor
Road District #2
Moses Lake (509) 765-4172

John Brissey, Supervisor
Road District #3
Quincy (509) 787-2321

Andrew Booth, Supervisor
Bridges
Ephrata (509) 754-6082

CONTRACT PROVISIONS AND PLANS

Ephrata Landfill MPE Pilot Study Interim Action Pretreatment Facility and Evaporation Pond

INFORMATIONAL COPY ONLY - NOT FOR BIDDING

Sealed Bids will be Opened on
June 28, 2016
at
1:30 P.M.
at the Office of the
Board of County Commissioners
Commissioners Hearing Room
Grant County Courthouse
P.O. Box 37
35 C Street NW
Ephrata, Washington 98823

This Page Intentionally Left Blank

INFORMATIONAL COPY ONLY - NOT FOR BIDDING

TABLE OF CONTENTS

NOTICE TO CONTRACTORS **1**

NOTICE TO ALL PLANHOLDERS **3**

BIDDER'S CHECK LIST **5**

PROPOSAL **7**

PROPOSAL – SIGNATURE PAGE **11**

NON-COLLUSION DECLARATION **13**

STATEMENT OF CONTRACTOR QUALIFICATIONS **15**

BID BOND **17**

CONTRACT **19**

CONTRACT BOND **21**

AMENDMENTS TO THE WSDOT STANDARD SPECIFICATIONS

SPECIAL PROVISIONS – PART 1, WSDOT SYSTEM **SP-1**

DIVISION 1 GENERAL REQUIREMENTS **SP-3**

DESCRIPTION OF WORK SP-3

1-01 DEFINITIONS AND TERMS SP-3

1-02 BID PROCEDURES AND CONDITIONS SP-4

1-04 SCOPE OF THE WORK SP-9

1-05 CONTROL OF WORK SP-10

1-06 CONTROL OF MATERIAL SP-19

1-07 LEGAL RELATIONS AND RESPONSIBILITIES TO THE PUBLIC SP-22

INFORMATIONAL COPY ONLY - NOT FOR BIDDING

1-08 PROSECUTION AND PROGRESS SP-31

1-09 MEASUREMENT AND PAYMENT SP-34

DIVISION 2 EARTHWORK SP-37

2-03 ROADWAY EXCAVATION AND EMBANKMENT SP-37

2-06 SUBGRADE PREPARATION SP-42

2-07 WATERING SP-43

2-10 DITCH EXCAVATION SP-43

2-11 TRIMMING AND CLEANUP SP-44

DIVISION 3 AGGREGATE PRODUCTION AND ACCEPTANCE SP-47

3-01 PRODUCTION FROM QUARRY AND PIT SITES SP-47

3-02 STOCKPILING AGGREGATES SP-47

DIVISION 4 BASES SP-49

4-04 BALLAST AND CRUSHED SURFACING SP-49

DIVISION 7 DRAINAGE STRUCTURES, STORM SEWERS, SANITARY SEWERS, WATER MAINS, AND CONDUITS SP-51

7-06 LEAK DETECTION SYSTEM, WATERLINE, DISCHARGE PIPE, AND VENT PIPE SP-51

DIVISION 8 MISCELLANEOUS CONSTRUCTION SP-55

8-05 GEOSYNTHETICS SP-55

8-12 CHAIN LINK FENCE AND WIRE FENCE SP-80

DIVISION 9 MATERIALS SP-83

9-05 DRAINAGE STRUCTURES AND CULVERTS SP-83

9-16 FENCE AND GUARDRAIL SP-85

9-37 GEOSYNTHETICS SP-86

9-38 SOILS SP-91

INFORMATIONAL COPY ONLY - NOT FOR BIDDING

SPECIAL PROVISIONS – PART 2, CSI SYSTEM

DIVISION 01 GENERAL REQUIREMENTS
01 25 00 SUBSTITUTION PROCEDURES
01 33 00 SUBMITTAL PROCEDURES

DIVISION 03 CONCRETE
03 11 00 CONCRETE FORMING
03 15 19 ANCHORS, INSERTS, AND EMBEDDED PRODUCTS
03 20 00 CONCRETE REINFORCING
03 30 00 CAST-IN-PLACE CONCRETE
03 34 13 CONTROLLED DENSITY FILL

DIVISION 06 WOOD, PLASTICS, AND COMPOSITES
06 10 00 ROUGH CARPENTRY

DIVISION 07 THERMAL AND MOISTURE PROTECTION
07 21 00 BUILDING INSULATION

DIVISION 08 OPENINGS
08 11 13 HOLLOW METAL DOORS AND FRAMES
08 36 13 SECTIONAL OVERHEAD DOORS
08 71 00 DOOR HARDWARE

DIVISION 09 FINISHES
09 21 16 GYPSUM BOARD ASSEMBLIES
09 90 00 PAINTING

DIVISION 13 SPECIAL CONSTRUCTION
13 05 41 SEISMIC RESTRAINT REQUIREMENTS FOR NONSTRUCTURAL COMPONENTS
13 34 19 PRE-ENGINEERED BUILDING
13 34 20 PRE-FABRICATED INTERMODAL CONTAINERS

DIVISION 22 PLUMBING
22 13 16 PIPE AND FITTINGS
22 13 16.1 PIPING SCHEDULE
22 13 19 VALVES AND OPERATORS
22 33 46 PIPE HANGERS AND SUPPORTS

DIVISION 23 HEATING, VENTILATING, AND AIR CONDITIONING (HVAC)
23 81 00 HVAC EQUIPMENT

DIVISION 26 ELECTRICAL
26 05 11 GENERAL REQUIREMENTS FOR ELECTRICAL INSTALLATION
26 05 19 LOW-VOLTAGE ELECTRICAL POWER CONDUCTORS AND CABLES
26 05 26 GROUNDING AND BONDING FOR ELECTRICAL SYSTEMS

INFORMATIONAL COPY ONLY - NOT FOR BIDDING

26 05 29 HANGERS AND SUPPORTS FOR ELECTRICAL SYSTEMS
26 05 33 RACEWAYS AND BOXES FOR ELECTRICAL SYSTEMS
26 05 43 UNDERGROUND DUCTS AND RACEWAYS FOR ELECTRICAL SYSTEMS
26 05 53 IDENTIFICATION FOR ELECTRICAL SYSTEMS
26 05 73 SHORT CIRCUIT, COORDINATION, AND ARC FLASH REPORT
26 22 13 LOW-VOLTAGE DISTRIBUTION TRANSFORMERS
26 24 16 PANELBOARDS
26 27 16 ELECTRICAL CABINETS AND ENCLOSURES
26 27 26 WIRING DEVICES
26 28 16 ENCLOSED SWITCHES AND CIRCUIT BREAKERS
26 43 00 SURGE PROTECTIVE DEVICES
26 50 00 LIGHTING

DIVISION 31 EARTHWORK
31 23 23.33 CONTROLLED DENSITY FILL

DIVISION 40 PROCESS INTEGRATION
40 41 13 PROCESS PIPING HEAT TRACING
40 95 73 PROCESS CONTROL WIRING

DIVISION 42 PROCESS HEATING, COOLING, AND DRYING EQUIPMENT
42 42 13 PROCESS PIPING INSULATION

DIVISION 43 PROCESS GAS AND LIQUID HANDLING, PURIFICATION, AND STORAGE EQUIPMENT
43 25 50 POSITIVE DISPLACEMENT SUBMERSIBLE LIQUID PUMPS
43 31 10 LIQUID TREATMENT TRAIN
43 31 20 VAPOR TREATMENT TRAIN

APPENDIX A – TITLE VI – CONTRACTOR REQUIREMENTS

APPENDIX B – STATE WAGE RATES

APPENDIX C – CONSTRUCTION QUALITY ASSURANCE PLAN

APPENDIX D – AMENDMENTS TO THE WSDOT STANDARD SPECIFICATIONS

APPENDIX E – PLANS

APPENDIX F – WSDOT STANDARD PLANS

INFORMATIONAL COPY ONLY-NOT FOR BIDDING

NOTICE TO CONTRACTORS

Sealed bids, plainly marked **"BID FOR Ephrata Landfill MPE Pilot Study Interim Action Pretreatment Facility and Evaporation Pond"**, will be received by Grant County at the Office of the Board of County Commissioners located in the County Courthouse, P.O. Box 37, 35 C Street NW – Room 206, Ephrata, WA, 98823, until **1:30 P.M., June 28, 2016**, and will then and there, in the commissioners hearing room, be opened and publicly read for the construction of the improvements.

All bid proposals shall be accompanied by a bid proposal deposit in cash, certified check, cashier's check, or surety bond in an amount equal to five percent (5%) of the amount of such bid proposal. No conditional bid bond will be accepted. Should the successful bidder fail to enter into such contract and furnish a satisfactory performance bond within the time stated in the specifications, the bid proposal deposit shall be forfeited to Grant County.

Maps, plans and specifications may be purchased from the office of the County Engineer, 124 Enterprise St. S.E., Ephrata, WA 98823, upon payment of the amount of $25.00 (non-refundable).

Informational copies of the maps, plans and specifications are on file for inspection at the Grant County Public Works Building, 124 Enterprise St. S.E., Ephrata, WA 98823, and in various plan centers located in Washington.

The Board of County Commissioners of Grant County, Washington, reserves the right to reject any and all bids. The award of this contract, if made, will be to the lowest responsible bidder.

The work for which bids will be received follows:

Ephrata Landfill MPE Pilot Study Interim Action
Pretreatment Facility and Evaporation Pond

INFORMATIONAL COPY ONLY - NOT FOR BIDDING

This Page Intentionally Left Blank

INFORMATIONAL COPY ONLY - NOT FOR BIDDING

This Page Intentionally Left Blank

INFORMATIONAL COPY ONLY - NOT FOR BIDDING

BIDDER'S CHECK LIST

The bidder's attention is especially called to the following forms which must be executed in full as required:

(A) PROPOSAL
The unit prices and lump sum bid items must be shown in the spaces provided. Show unit prices in figures only. All extensions of the unit prices must be shown in the spaces provided.

(B) PROPOSAL SIGNATURE SHEET
To be filled in and signed by the bidder.

(C) STATEMENT OF CONTRACTOR QUALIFICATIONS
To be filled in and signed by the bidder.

(D) BID BOND
This form is to be executed by the bidder and his surety company unless the bid is accompanied by cash, certified or cashier's check. The amount of this bond shall be equal to 5% of the total amount bid and may be shown in dollars or on a percentage basis.

The following forms are to be executed after the contract is awarded:

(E) CONTRACT
This agreement is to be executed by the successful bidder, his Surety Company, and Grant County.

(F) CONTRACT BOND
To be executed by the successful bidder and his surety company.

INFORMATIONAL COPY ONLY- NOT FOR BIDDING

This Page Intentionally Left Blank

INFORMATIONAL COPY ONLY - NOT FOR BIDDING

PROPOSAL

To: Board of County Commissioners
Grant County, Washington

Date:_____, 2016

This certifies that the undersigned has examined the location of Ephrata Landfill Pretreatment Facility and Evaporation Pond**, in Grant County, Washington,** and that the plans, specifications and contract governing the work, and the method by which payment will be made for said work is understood. The undersigned hereby proposes to undertake and complete the work in accordance with said plans, specifications and contract and at the following schedule of rates and prices. Schedule of rates and prices shall include, but not be limited to, all costs for labor, materials, tools, equipment, shipping, and services require to complete the construction of this project.

Ephrata Landfill MPE Pilot Study Interim Action Pretreatment Facility and Evaporation Pond

Note: Unit prices for all items, all extensions, and total amount must be shown. Please type or use ink. Please initial all changes.

Item No.	Plan Quantity	Item Description	Price per Unit* Dollars . Cents	Total Amount Dollars . Cents
PREPARATION				
1	100% Lump Sum	Mobilization (1-09.7)	At ////////./////// Per Lump Sum	.
2	100% Lump Sum	Surveying (1-05.5)	At ////////./////// Per Lump Sum	.
3	100% Lump Sum	Site Health and Safety Plan (1-07.28)	At ////////./////// Per Lump Sum	.
4	100% Lump Sum	Submittals	At ////////./////// Per Lump Sum	.
SITE CIVIL AND EVAPORATION POND				
5	2,115 CY	Excavation and Haul (2-03)	At . Per CY	.
6	1,140 CY	Embankment and Compaction (2-03)	At . Per CY	.
7	310 CY	Bedding Layer, In-Place (2-03)	At .	.

INFORMATIONAL COPY ONLY - NOT FOR BIDDING

Item No.	Plan Quantity	Item Description	Price per Unit* Dollars . Cents	Total Amount Dollars . Cents
			Per CY	
8	695 CY	Liner Cover Layer, In-Place (2-03)	At . Per CY	.
9	385 CY	Rock Armor and Stockpile (2-03)	At . Per CY	.
10	2,136 SY	Crushed Surfacing, In-Place (4-04)	At . Per SY	.
11	1 EA	Leak Detection Pipe (7-06)	At . Per EA	.
12	695 LF	2-Inch HDPE Waterline (7-06)	At . Per LF	.
13	468 LF	1-Inch HDPE Discharge Line (7-06)	At . Per LF	.
14	44 LF	4-Inch HDPE Connection and Vent Pipe (7-06)	At . Per LF	.
15	7,150 SY	60-mil Textured HDPE Geomembrane (8-05)	At . Per SY	.
16	1,870 SY	30-mil PVC Geomembrane (8-05)	At . Per SY	.
17	3,575 SY	Geonet Layer (8-05)	At . Per SY	.
18	640 SY	Geotextile Cushion Layer (8-05)	At . Per SY	.
19	5,576 SY	Geocomposite Layer (8-05)	At . Per SY	.

INFORMATIONAL COPY ONLY - NOT FOR BIDDING

Item No.	Plan Quantity	Item Description	Price per Unit* Dollars . Cents	Total Amount Dollars . Cents
20	1 EA	Geomembrane Penetrations (8-05)	At . Per EA	.
21	1 EA	Depth Marker (8-06)	At . Per EA	.
22	10 EA	LFG Vents (8-07)	At . Per EA	.
23	22 EA	Pipe Hangers (8-08)	At . Per EA	.
24	375 LF	Chain Link Fence Type 1 (8-12)	At . Per LF	.
25	2 EA	Double 16-foot Chain Link Gate (8-12)	At . Per EA	.
LIQUID AND VAPOR TREATMENT TRAINS[a]				
26	100% Lump Sum	Container No. 1 Liquid Treatment Train	At ////////.///// Per Lump Sum	.
27	100% Lump Sum	Container No. 2 Vapor Treatment Train	At ////////.///// Per Lump Sum	.
OFFICE/STORAGE BUILDING[b]				
28	100% Lump Sum	Office/Storage Building	At ////////.///// Per Lump Sum	.
29	100% Lump Sum	Electrical Power Connection	At ////////.///// Per Lump Sum	.
MULTIPHASE EXTRACTION AND CONVEYANCE SYSTEMS[c]				
30	100% Lump Sum	Well Pumps, Conveyance Lines, E&IC	At ////////.///// Per Lump Sum	.
31	44 EA	Expansion Joints	At . Per EA	.

INFORMATIONAL COPY ONLY - NOT FOR BIDDING

Item No.	Plan Quantity	Item Description	Price per Unit* Dollars . Cents	Total Amount Dollars . Cents
MISCELLANEOUS[d]				
32	100% Lump Sum	All Other Work	At ////////./////// Per Lump Sum	.
33	100% Lump Sum	Field Testing, Startup, Commissioning, Programming, Configuration, and Post-Commissioning Services	At ////////./////// Per Lump Sum	.

Contract Total	.

NOTES:

[a] Containerized, package treatment systems and foundations as specified or shown in Contract Documents.

[b] Includes building, foundations, HVAC, and site electrical from power pole to Office/Storage Building and Containers No. 1 and No. 2.

[c] All pumps, conveyance, electrical, controls, instrumentation from well field to Containers No. 1 and No. 2.

[d] All other work not included in Items 1-31, including but not limited to telephone line, water hydrant, etc.

INFORMATIONAL COPY ONLY - NOT FOR BIDDING

PROPOSAL – SIGNATURE PAGE

The bidder is hereby advised that by signature of this proposal he/she is deemed to have acknowledged all requirements and signed all certificates contained herein.

A proposal guaranty in an amount of five percent (5%) of the total bid, based upon the approximate estimate of quantities at the above prices and in the form as indicated below, is attached hereto:

Cash	☐	In the Amount of _____
Cashier's Check	☐	_____ Dollars
Certified Check	☐	($_____) Payable to the Grant County Treasurer
Proposal Bond	☐	In the Amount of 5% of the Bid

Receipt is hereby acknowledged of addendum(s) No.(s) ____, ____ & ____.

Signature of Authorized Official(s)

Proposal Must Be Signed →

_____

_____
Please Print Name of Authorized Official

Firm Name _____

Address _____

_____

_____

State of Washington Contractor's License No. _____

Federal ID No. _____

Note:

(1) This proposal form is not transferable and any alteration entered hereon without prior permission from the County Engineer will be cause for considering the proposal irregular and subsequent rejection of bid.

(2) Please refer to section 1-02.6 of the standard specifications, re: "Preparation of Proposal" or "Article 4" of the instructions to bidders for building construction jobs.

(3) Should it be necessary to modify this proposal either in writing or by electronic means, please make reference to the following proposal number in your communication:

_____

Revised 8/95

INFORMATIONAL COPY ONLY - NOT FOR BIDDING

This Page Intentionally Left Blank

INFORMATIONAL COPY ONLY - NOT FOR BIDDING

NON-COLLUSION DECLARATION

I, by signing the proposal, hereby declare, under penalty of perjury under the laws of the United States that the following statements are true and correct:

1. That the undersigned person(s), firm, association, or corporation has (have) not, either directly or indirectly, entered into any agreement, participated in any collusion, or otherwise taken any action in restraint of free competitive bidding in connection with the project for which this proposal is submitted.

2. **That by signing the signature page of this proposal, I am deemed to have signed and have agreed to the provisions of this declaration.**

Notice to All Bidders

To report bid rigging activities call:

1-800-424-9071

The U.S. Department of Transportation (USDOT) operates the above toll-free "hotline" Monday through Friday, 8:00 a.m. to 5:00 p.m., Eastern Time. Anyone with knowledge of possible bid rigging, bidder collusion, or other fraudulent activities should use the "hotline" to report such activities.

The "hotline" is part of USDOT's continuing effort to identify and investigate highway construction contract fraud and abuse and is operated under the direction of the USDOT Inspector General. All information will be treated confidentially and caller anonymity will be respected.

Revised 8/95

INFORMATIONAL COPY ONLY - NOT FOR BIDDING

This Page Intentionally Left Blank

INFORMATIONAL COPY ONLY - NOT FOR BIDDING

STATEMENT OF CONTRACTOR QUALIFICATIONS

To: Board of County Commissioners Date: _____, 2016
Grant County, Washington

RE: Ephrata Landfill MPE Pilot Study Interim Action Pretreatment Facility and Evaporation Pond

I hereby maintain that I am a responsible bidder as contemplated by the policies of the State of Washington and Chapter 36.77 of the Revised Code of Washington.

1. My permanent business name and address is _____ which I have maintained for ____ years. My phone is (____)_____ Fax (____)_____
2. I have adequate plant equipment to expeditiously and properly perform the work contemplated for Grant County, Washington. **Description of work:** This contract provides for construction of a groundwater extraction, conveyance, and pretreatment system to remediate groundwater contamination at the Ephrata Landfill in Grant County, Washington. Work includes construction of a lined evaporation pond; discharge conveyance line; general site civil, grading, fencing, water; a metal frame office/storage building, liquid-phase and vapor-phase treatment trains housed in intermodal contains; multiphase extraction (MPE) well pumps; MPE conveyance lines; observation well instrumentation; and all electrical, controls, and instrumentation associated with the groundwater extraction, conveyance, and pretreatment system. All work shall be in accordance with the attached Contract Plans, these Contract Provisions, and the Standard Specifications. (Please list equipment to be used on this project. Attach list if necessary.)
   _____
   _____
   _____
   _____
3. I have adequate funds to promptly meet obligations incident to this work. (Provide bank, contact & phone.)
   a) _____
   b) _____
   c) _____
4. I have adequate experience in this class of work and I am thoroughly familiar with the specifications used in this project. I have constructed the following similar improvements: (Provide project name, contact & phone.)
   a) _____
   b) _____
   c) _____
5. I have submitted and maintain annually a "Standard Questionnaire and Financial Statement" to the Washington State Department of Transportation (WSDOT):
   ☐ Yes ☐ No Region: _____ WSDOT has determined:
   a) I am prequalified to _____
   in the amount of _____.__

INFORMATIONAL COPY ONLY - NOT FOR BIDDING

b) I have failed to be prequalified for the following reasons: _____. The Contracting Agency may determine a prospective Bidder who is not prequalified to perform certain types of work within the financial and experience constraints determined by WSDOT to be not responsible and refuse to award a contract.

The Board of County Commissioners shall proceed to award the contract to the lowest and best bidder but may reject any or all bids if in its opinion good cause exists therefor. (RCW 36.77.040)

I hereby certify that the above statements are true and accurate.

Very truly yours,

By: _____

(Print Name) _____

Company Name: _____

Address: _____

City, State, Zip: _____

Washington State Contractor's License No.: _____

Revised 4/02

INFORMATIONAL COPY ONLY - NOT FOR BIDDING

BID BOND

KNOW ALL MEN BY THESE PRESENTS:

That we, _____, as Principal, and _____, as Surety, are held and firmly bound unto Grant County, Washington, as Obligee, in the penal sum of _____ Dollars ($_____) for the payment of which the Principal and Surety bind themselves, their heirs, executors, administrators, successors and assigns, jointly and severally, by these presents.

The condition of the obligation is such that if the Obligee shall make any award to the Principal for Ephrata Landfill Pretreatment Facility and Evaporation Pond**,** located in Grant County, Washington, according to the terms of the proposal or bid made by the Principal therefor, and the Principal shall duly make and enter into a contract with the Obligee in accordance with the terms of said proposal or bid and award and shall give bond for the faithful performance thereof, with the Surety or Sureties approved by the Obligee; or if the principal shall, in case of failure so to do, pay and forfeit to the Obligee the penal amount of the deposit specified in the call for bids, then this obligation shall be null and void; otherwise it shall be and remain in full force and effect and the Surety shall forthwith pay and forfeit to the Obligee, as penalty and liquidated damages, the amount of this bond.

SIGNED, SEALED AND DATED THIS ____ DAY OF _____ , 2016

Principal _____

Surety _____

Attorney-in-Fact _____

INFORMATIONAL COPY ONLY - NOT FOR BIDDING

This Page Intentionally Left Blank

INFORMATIONAL COPY ONLY - NOT FOR BIDDING

CONTRACT

THIS AGREEMENT, between the Board of County Commissioners of Grant County, State of Washington, acting under and by virtue of Chapter 36.77 of the Revised Code of Washington, as amended, hereinafter called the County, and _____, for itself, its heirs, executors, administrators, successors and assigns, hereinafter called the Contractor.

WITNESSETH:

That in consideration of the payments, covenants, and agreements, hereinafter mentioned, and attached and made a part of this agreement, to be made and performed by the parties hereto, and the parties hereto covenant and agree as follows:

DESCRIPTION OF WORK:

1. The Contractor shall do all work and furnish all tools, materials, and equipment necessary to complete the Ephrata Landfill MPE Pilot Study Interim Action Pretreatment Facility and Evaporation Pond**,** located in Grant County, Washington, as proposed in a bid opened **1:30 P.M., June 28, 2016,** in accordance with and as described in the herein attached plans and standard specifications, and in full compliance with the terms, conditions, and stipulations herein set forth and attached, now referred to any by such reference incorporated herein and made part hereof as fully for all purposes as if here set forth at length, and shall perform any alterations in or additions to the work covered by this contract and every part thereof and any force account work may be ordered as provided in this contract and every part thereof.

2. The Contractor shall provide and be at the expense of all materials, labor, carriage, tools, implements and conveniences and things of every description that may be requisite for the transfer of materials and for constructing and completing the work provided for in this contract and every part thereof.

3. The County hereby promises and agrees with the Contractor to employ, and does employ the Contractor to provide the materials and to do and cause to be done the above described work and to complete and finish the same according to the attached plans and specifications and the terms and conditions herein contained, and hereby contracts to pay for the same according to the attached specifications and the schedule of unit or itemized prices hereto attached, at the time and in the manner and upon the conditions provided for in this contract and every part thereof. The County further agrees to employ the Contractor to perform any alterations in or additions to the work covered by this contract and every part thereof and any force account work that may be ordered and pay for same under the terms of this contract and the attached plans and specifications.

4. The Contractor for himself, and for his heirs, executors, administrators and assigns, and successors and assigns, does hereby agree to the full performance of all the covenants herein contained upon the part of the Contractor.

5. It is further provided that no liability shall attach to the County by reason of entering into this contract, except as expressly provided herein.

INFORMATIONAL COPY ONLY-NOT FOR BIDDING

IN WITNESS WHEREOF, the said Contractor has executed this instrument, and the said Board of County Commissioners of Grant County has caused this instrument to be executed by and in the name of said Board by its Members, duly attested by its Clerk, the day and year below written, and the seal of said Board to be hereunto affixed on said date.

____day of _____, 2016

_____
Signature

_____
Print Name

_____
Firm Name

_____
Address

_____
City State Zip

(____)_____
Phone

ATTEST:

_____
Clerk of the Board

APPROVED AS TO FORM:

____day of _____,2016

_____
Deputy Prosecuting Attorney

BOARD OF COUNTY COMMISSIONERS
OF GRANT COUNTY, WASHINGTON

Done this ____ day of _____, 2016

_____
Chair

_____
Member

_____
Member

INFORMATIONAL COPY ONLY - NOT FOR BIDDING

CONTRACT BOND

KNOW ALL MEN BY THESE PRESENTS:

That we, the undersigned, _____, as principal, and _____, a corporation organized and existing under the laws of the State of _____, as surety corporation, and qualified under the laws of the State of Washington to become surety upon bonds of contractors with municipal corporations, as surety, are jointly and severally held and firmly bound to Grant County, Washington, in the penal sum of _____ ($_____) for the payment of which sum on demand we bind ourselves and our successors, heirs, administrators or personal representatives, as the case may be.

This obligation is entered into in pursuance of the statutes of the State of Washington, the Ordinances of Grant County, Washington.

Dated at _____, Washington, this ____ day of _____, 2016.

The conditions of the above obligation are such that:

WHEREAS, on **June 28, 2016**, the Board of County Commissioners of said Grant County has let or is about to let to the Principal, a certain contract, the said contract providing for the improvement of the Ephrata Landfill MPE Pilot Study Interim Action Pretreatment Facility and Evaporation Pond**,** located in Grant County, Washington, (which contract is referred to herein and is made a part hereof as though attached hereto), and

WHEREAS, the said Principal has accepted, or is about to accept, the said contract, and undertake to perform the work therein provided for in the manner and within the time set forth;

NOW, THEREFORE, if the said Principal shall faithfully perform all of the provisions of said contract in the manner and within the time therein set forth or within such extensions of time as may be granted under said contract, and shall pay all laborers, mechanics, subcontractors and material men, and all persons who shall supply said Principal or subcontractors with provisions and supplies for the carrying on of said work, and shall hold said Grant County harmless from any loss or damage occasioned to any person or property by reason of any carelessness or negligence on the part of said Principal, or any subcontractor in the performance of said work and shall indemnify and hold Grant County harmless from any damage or expense by reason of failure of performance as specified in said contract or from defects appearing or developing in the material or workmanship provided or performed under said contract, and until the same is accepted, then and in that event this obligation shall be void but otherwise it shall be and remain in full force and effect.

Countersigned:

_____
Licensed Agent/Surety Co.

_____

_____

(_____)_____
Firm, Street Address (No P.O. Box), Phone of Local Office of Agent

_____
Principal

_____
Attorney-in-Fact, Surety

Approved as to form:

_____, 2016

_____
Prosecuting Attorney

INFORMATIONAL COPY ONLY, NOT FOR BIDDING

This Page Intentionally Left Blank

INFORMATIONAL COPY ONLY - NOT FOR BIDDING

AMENDMENTS TO THE WSDOT STANDARD SPECIFICATIONS

See Appendix D for the Amendments to the 2016 WSDOT *Standard Specifications for Road, Bridge, and Municipal Construction*.

INFORMATIONAL COPY ONLY - NOT FOR BIDDING

This Page Intentionally Left Blank

INFORMATIONAL COPY ONLY - NOT FOR BIDDING

Special Provisions

Part 1, WSDOT System

INFORMATIONAL COPY ONLY - NOT FOR BIDDING

SPECIAL PROVISIONS – PART 1, WSDOT SYSTEM

(******)

INTRODUCTION

The Amendments to the Standard Specifications (Appendix D) and the following Special Provisions shall be used in conjunction with the 2016 Standard Specifications for Road, Bridge, and Municipal Construction, as issued by the Washington State Department of Transportation (WSDOT) and the American Public Works Association (APWA), Washington State Chapter (hereafter "Standard Specifications"). The Standard Specifications, as modified or supplemented by the Amendments to the Standard Specifications and these Special Provisions, all of which are made a part of the Contract Documents, shall govern all of the work. Special Provisions are divided into two part: Part I, WSDOT System and Part 2, CSI System.

The project-specific Special Provisions are labeled as *(******)*. The GSPs are labeled under the headers of each GSP, with the effective date of the GSP and its source. For example:

(March 8, 2013 APWA GSP)
(April 1, 2013 WSDOT GSP)

General Special Provisions are similar to Standard Specifications in that they typically apply to many projects, usually in more than one Region. Usually, the only difference from one project to another is the inclusion of variable project data, inserted as a "fill-in".

Project Specific Special Provisions normally appear only in the contract for which the project specific provisions were developed.

INFORMATIONAL COPY ONLY - NOT FOR BIDDING

This Page Intentionally Left Blank

INFORMATIONAL COPY ONLY - NOT FOR BIDDING

DIVISION 1 GENERAL REQUIREMENTS

DESCRIPTION OF WORK

(******)

This Contract provides for the construction of a groundwater extraction, conveyance, and pretreatment system to remediate groundwater contamination at the Ephrata Landfill in Grant County, Washington. Work includes construction of a lined evaporation pond; discharge conveyance line; general site civil, grading, fencing, water; a metal frame office/storage building, liquid-phase and vapor-phase treatment trains housed in intermodal containers; multiphase extraction (MPE) well pumps; MPE conveyance lines; observation well instrumentation; and all electrical, controls, and instrumentation associated with the groundwater extraction, conveyance, and pretreatment system and other work, all in accordance with the attached Contract Plans, these Contract Provisions, and the Standard Specifications.

1-01 DEFINITIONS AND TERMS

1-01.2 Abbreviations

1-01.2(1) Associations and Miscellaneous

Section 1-01.2(1) is supplemented with the following:

(******)

GRI	Geosynthetic Research Institute

1-01.2(2) Items of Work and Units of Measurement

Section 1-01.2(2) is supplemented with the following:

(******)

cm/s	Centimeter Per Second
CP	Cleanout Pipe
FTB	Film Tear Bond
GRI	Geosynthetic Research Institute
GCL	Geosynthetic Clay Liner
HDPE	High Density Polyethylene
LCP	Leachate Collection Pipe
LFG	Landfill Gas
mil	One Thousandth of an Inch
CD	Condensate Drain
CC	Condensate Collection

INFORMATIONAL COPY ONLY - NOT FOR BIDDING

1-01.3 Definitions

Section 1-01.3 is supplemented with the following:

(******)

The venue of all causes of action arising from the advertisement, award, execution, and performance of the contract shall be in the Superior Court of Grant County, Washington.

Where the term "Engineer" appears in the Contract Documents (including the Standard Specifications) it shall mean Parametrix, Inc., located at 719 2nd Avenue, Suite 200, Seattle, WA 98104 acting as the duly authorized representative of Grant County Public Works Department in the administrative management of the Contract.

Where the term "Owner," "County" "Contracting Agency," "Department," or "Department of Transportation," appears in the Contract Documents (including the Standard Specifications) it shall mean the Grant County Public Works Department, as represented by its authorized officers, employees or agents.

Where the terms "Commission," "Washington State Transportation Commission," "Secretary of Transportation," appears in the Contract Documents (including the Standard Specifications), it shall mean Board of County Commissioners, Grant County, Washington.

Where the terms "State" or "State of Washington," appears in the Contract Documents (including the Standard Specifications), it shall mean Grant County, Washington.

Where the term "Specifications" appears in the Contract Documents it shall mean the Standard Specifications and the Special Provisions.

1-02 BID PROCEDURES AND CONDITIONS

1-02.1 Prequalification of Bidders

Delete this Section and replace it with the following:

(******)

1-02.1 Qualifications of Bidder

Bidders must meet the minimum qualifications of RCW 39.04.350(1), as amended:

> Before award of a public works contract, a bidder must meet the following responsibility criteria to be considered a responsible bidder and qualified to be awarded a public works project. The bidder must:
>
> 1. At the time of bid submittal, have a certificate of registration in compliance with chapter 18.27 RCW;
> 2. Have a current state unified business identifier number;
> 3. If applicable, have industrial insurance coverage for the bidder's employees working in Washington as required in Title 51 RCW; an employment security department number as required in Title 50 RCW; and a state excise tax registration number as required in Title 82 RCW; and
> 4. Not be disqualified from bidding on any public works contract under RCW 39.06.010 or 39.12.065(3).

INFORMATIONAL COPY ONLY - NOT FOR BIDDING

Bidders shall be qualified by experience, financing, equipment, and organization to do the work called for in the Contract Documents. The Contracting Agency reserves the right to take whatever action it deems necessary to ascertain the ability of the bidder to perform the work satisfactorily. The Contracting Agency's actions may include a pre-qualification procedure prior to the bidder being furnished a proposal form on any contract, or a pre-award survey of the bidder's qualifications prior to award.

1-02.2 Plans and Specifications

Section 1-02.2 is replaced with the following:

(******)

Copies of the Plans and Specifications may be obtained from Grant County Public Works Department, 124 Enterprise St. S.E., Ephrata, Washington, 98823, in accordance with conditions as set forth in the Notice to Contractors.

After award of the Contract, up to five (5) sets of Plans and Specifications will be provided to the CONTRACTOR at no charge. Additional copies of the Plans and Specifications may be obtained on request by paying the actual cost of reproduction.

1-02.6 Preparation of Proposal

(August 2, 2004 WSDOT GSP)

The fifth and sixth paragraphs of Section 1-02.6 are deleted.

Section 1-02.6 is supplemented with the following:

(******)

On this project, the bidder shall be required to submit with the bid a list of:

- Subcontractors.
- The work the subcontractors will perform.

1-02.9 Delivery of Proposal

(******)

Delete the first paragraph of this section and replace it with the following:

Each proposal shall be Submitted in a sealed envelope marked clearly: **"Bid for Ephrata Landfill MPE Pilot Study Interim Action Pretreatment Facility and Evaporation Pond."** The name and address of the company submitting the proposal shall be marked on the envelope.

INFORMATIONAL COPY ONLY - NOT FOR BIDDING

1-02.12 Public Opening of Proposals

Section 1-02.12 is supplemented with the following:

(******)

Date Of Opening Bids

Sealed bids are to be received at the following location prior to the time specified:

The Office of the Board of County Commissioners, Grant County Courthouse, Room 206, 35 C Street NW, P.O. Box 37, Ephrata, WA 98823

The bid opening date for this project is **June 28, 2016**. Bids received will be publicly opened and read after **1:30 P.M.** on this date.

1-02.14 Disqualification of Bidders

(March 8, 2013 APWA GSP, Option B)

Delete this section and replace it with the following:

A Bidder will be deemed not responsible if the Bidder does not meet the mandatory bidder responsibility criteria in RCW 39.04.350(1), as amended; or does not meet the following Supplemental Criteria:

1. **Delinquent State Taxes**
   - A Criterion: The Bidder shall not owe delinquent taxes to the Washington State Department of Revenue without a payment plan approved by the Department of Revenue.
   - B. Documentation: The Bidder shall not be listed on the Washington State Department of Revenue's "Delinquent Taxpayer List" website: http://dor.wa.gov/content/fileandpaytaxes/latefiling/dtlwest.aspx , or if they are so listed, they must submit a written payment plan approved by the Department of Revenue, to the Contracting Agency by the deadline listed below.
2. **Federal Debarment**
   - A Criterion: The Bidder shall not currently be debarred or suspended by the Federal government.
   - B. Documentation: The Bidder shall not be listed as having an "active exclusion" on the U.S. government's "System for Award Management" database (www.sam.gov).
3. **Subcontractor Responsibility**
   - A Criterion: The Bidder's standard subcontract form shall include the subcontractor responsibility language required by RCW 39.06.020, and the Bidder shall have an established procedure which it utilizes to validate the responsibility of each of its subcontractors. The Bidder's subcontract form shall also include a requirement that each of its subcontractors shall have and document a similar procedure to determine whether the sub-tier subcontractors with whom it contracts are also "responsible" subcontractors as defined by RCW 39.06.020.

INFORMATIONAL COPY ONLY - NOT FOR BIDDING

B. Documentation: The Bidder, if and when required as detailed below, shall submit a copy of its standard subcontract form for review by the Contracting Agency, and a written description of its procedure for validating the responsibility of subcontractors with which it contracts.

4. **Prevailing Wages**

A Criterion: The Bidder shall not have a record of prevailing wage violations as determined by WA Labor & Industries in the five years prior to the bid submittal date, that demonstrates a pattern of failing to pay workers prevailing wages, unless there are extenuating circumstances and such circumstances are deemed acceptable to the Contracting Agency.

B. Documentation: The Bidder, if and when required as detailed below, shall submit a list of all prevailing wage violations in the five years prior to the bid submittal date, along with an explanation of each violation and how it was resolved. The Contracting Agency will evaluate these explanations and the resolution of each complaint to determine whether the violation demonstrate a pattern of failing to pay its workers prevailing wages as required.

5. **Claims Against Retainage and Bonds**

A Criterion: The Bidder shall not have a record of excessive claims filed against the retainage or payment bonds for public works projects in the three years prior to the bid submittal date, that demonstrate a lack of effective management by the Bidder of making timely and appropriate payments to its subcontractors, suppliers, and workers, unless there are extenuating circumstances and such circumstances are deemed acceptable to the Contracting Agency.

B. Documentation: The Bidder, if and when required as detailed below, shall submit a list of the public works projects completed in the three years prior to the bid submittal date that have had claims against retainage and bonds and include for each project the following information:

- Name of project
- The owner and contact information for the owner;
- A list of claims filed against the retainage and/or payment bond for any of the projects listed;
- A written explanation of the circumstances surrounding each claim and the ultimate resolution of the claim.

6. **Public Bidding Crime**

A Criterion: The Bidder and/or its owners shall not have been convicted of a crime involving bidding on a public works contract in the five years prior to the bid submittal date.

B. Documentation: The Bidder, if and when required as detailed below, shall sign a statement (on a form to be provided by the Contracting Agency) that the Bidder and/or its owners have not been convicted of a crime involving bidding on a public works contract.

INFORMATIONAL COPY ONLY - NOT FOR BIDDING

7. **Termination for Cause / Termination for Default**
   A Criterion: The Bidder shall not have had any public works contract terminated for cause or terminated for default by a government agency in the five years prior to the bid submittal date, unless there are extenuating circumstances and such circumstances are deemed acceptable to the Contracting Agency.
   B. Documentation: The Bidder, if and when required as detailed below, shall sign a statement (on a form to be provided by the Contracting Agency) that the Bidder has not had any public works contract terminated for cause or terminated for default by a government agency in the five years prior to the bid submittal date; or if Bidder was terminated, describe the circumstances. .
8. **Lawsuits**
   A Criterion: The Bidder shall not have lawsuits with judgments entered against the Bidder in the five years prior to the bid submittal date that demonstrate a pattern of failing to meet the terms of contracts, unless there are extenuating circumstances and such circumstances are deemed acceptable to the Contracting Agency
   B. Documentation: The Bidder, if and when required as detailed below, shall sign a statement (on a form to be provided by the Contracting Agency) that the Bidder has not had any lawsuits with judgments entered against the Bidder in the five years prior to the bid submittal date that demonstrate a pattern of failing to meet the terms of contracts, or shall submit a list of all lawsuits with judgments entered against the Bidder in the five years prior to the bid submittal date, along with a written explanation of the circumstances surrounding each such lawsuit. The Contracting Agency shall evaluate these explanations to determine whether the lawsuits demonstrate a pattern of failing to meet of terms of construction related contracts

As evidence that the Bidder meets the mandatory and supplemental responsibility criteria stated above, the apparent two lowest Bidders must submit to the Contracting Agency by 12:00 P.M. (noon) of the second business day following the bid submittal deadline, a written statement verifying that the Bidder meets all of the mandatory and supplemental criteria together with supporting documentation including but not limited to that detailed above (sufficient in the sole judgment of the Contracting Agency) demonstrating compliance with all mandatory and supplemental responsibility criteria. The Contracting Agency reserves the right to request such documentation from other Bidders as well, and to request further documentation as needed to assess Bidder responsibility. The Contracting Agency also reserves the right to obtain information from third-parties and independent sources of information concerning a Bidder's compliance with the mandatory and supplemental criteria, and to use that information in their evaluation. The Contracting Agency may (but is not required to) consider mitigating factors in determining whether the Bidder complies with the requirements of the supplemental criteria.

The basis for evaluation of Bidder compliance with these mandatory and supplemental criteria shall include any documents or facts obtained by Contracting Agency (whether from the Bidder or third parties) including but not limited to: (i) financial, historical, or

INFORMATIONAL COPY ONLY NOT FOR BIDDING

operational data from the Bidder; (ii) information obtained directly by the Contracting Agency from others for whom the Bidder has worked, or other public agencies or private enterprises; and (iii) any additional information obtained by the Contracting Agency which is believed to be relevant to the matter.

If the Contracting Agency determines the Bidder does not meet the bidder responsibility criteria above and is therefore not a responsible Bidder, the Contracting Agency shall notify the Bidder in writing, with the reasons for its determination. If the Bidder disagrees with this determination, it may appeal the determination within two (2) business days of the Contracting Agency's determination by presenting its appeal and any additional information to the Contracting Agency. The Contracting Agency will consider the appeal and any additional information before issuing its final determination. If the final determination affirms that the Bidder is not responsible, the Contracting Agency will not execute a contract with any other Bidder until at least two business days after the Bidder determined to be not responsible has received the Contracting Agency's final determination.

Request to Change Supplemental Bidder Responsibility Criteria Prior To Bid: Bidders with concerns about the relevancy or restrictiveness of the Supplemental Bidder Responsibility Criteria may make or submit requests to the Contracting Agency to modify the criteria. Such requests shall be in writing, describe the nature of the concerns, and propose specific modifications to the criteria. Bidders shall submit such requests to the Contracting Agency no later than five (5) business days prior to the bid submittal deadline and address the request to the Project Engineer or such other person designated by the Contracting Agency in the Bid Documents.

1-04 SCOPE OF THE WORK

1-04.2 Coordination of Contract Documents, Plans, Special Provisions, Specifications, and Addenda

Revise the second paragraph if Section 1-04.2 to read:

(******)
Any inconsistency in the parts of the contract shall be resolved by following this order of precedence (e.g., 1 presiding over 2, 2 over 3, and 3 over 4, and so forth:

1. Change Orders after approved.
2. Addenda.
3. Contract.
4. Measurement and Payment.
5. Plans.
7. Special Provisions Part 1, WSDOT System.
8. Special Provisions Part 2, CSI Technical Specifications.
9. Standard Specifications.

INFORMATIONAL COPY ONLY - NOT FOR BIDDING

10. Owner's Development Standards.
11. General Conditions.
12. Instructions to Bidders.
13. Proposal.
14. Performance Bond.

1-04.3 Reference Information

Section 1-04.3 is supplemented with the following:

(******)

This contract provides for construction of a groundwater extraction, conveyance, and pretreatment system to remediate groundwater contamination at the Ephrata Landfill in Grant County, Washington. Work includes construction of a lined evaporation pond; discharge conveyance line; general site civil, grading, fencing, water; a metal frame office/storage building, liquid-phase and vapor-phase treatment trains housed in intermodal containers; multiphase extraction (MPE) well pumps; MPE conveyance lines; observation well instrumentation; and all electrical, controls, and instrumentation associated with the groundwater extraction, conveyance, and pretreatment system. All work shall be in accordance with the attached Contract Plans, these Contract Provisions and the Standard Specifications.

1-04.11 Final Cleanup

Section 1-04.11 is supplemented with the following:

(******)

The Contractor shall also cleanup the areas, landfill, material stockpiles, haul routes, staging areas, storage areas, and any other areas the Contractor and his construction activities have impacted to the Engineer's satisfaction in accordance with Section 2-11.

1-05 CONTROL OF WORK

1-05.3 Working Drawings

Section 1-05.3 is supplemented with the following:

(******)

The Contractor shall submit three (3) prints of working or shop drawings with For Information Only (FIO) designation and six (6) prints of working or shop drawings with County Approval (CA) designation to the Engineer as to the method of construction and design prior to commencement of the work under the contract or delivery to the project site of any equipment or material covered by the drawings, whichever is later. Approval of the Engineer is not required for information only submittals. The Engineer reserves the right to require the Contractor to resubmit any item found not to comply with the contract. This does not relieve the Contractor from the obligation to furnish material conforming to the plans and specifications and will not prevent the Engineer from requiring removal or replacement of nonconforming material incorporated into the work. This does not relieve

INFORMATIONAL COPY ONLY - NOT FOR BIDDING

the Contractor of the requirement to furnish samples for testing by the Engineer's laboratory or for check testing by the Engineer in those instances where the technical specifications so prescribe.

Submittals will be monitored and spot checks will be made. When such checks indicate non-compliance, the Contractor will be notified by the same method used for County approval. An additional completed transmittal form shall be submitted (without attachments) which will be returned to the Contractor to signify the submittal has been received.

At the pre-construction meeting, the Contractor shall submit a list of submittals to the County.

The following checklist is intended to aid in the preparation of the Transmittal Form and related transmittals and is intended only as a partial summary of requirements stated elsewhere within this specification:

1. Use originals of the Transmittal Form. Do NOT use photocopies.
2. Do NOT submit multiple 6-digit specification sections on one Transmittal Form.
3. Subsequent submittals shall be numbered sequentially as submitted except for resubmittals. Resubmittals must be related to the parent (original) transmittal (i.e., transmittal No. 2 resubmittal would be number 2A, etc.).
4. County Approval (CA): Submit five copies of enclosures, each with Transmittal Form attached. For Information Only (FIO): Submit three copies of enclosures, each with Transmittal Forms attached and one additional copy of the Transmittal Form.
5. Break the submittal into items, which can be reviewed independently. For a transmittal with more than nine items, use multiple sets of Transmittal Forms.
6. Item numbers must be written on the enclosures and the Transmittal Form (column A).
7. There shall be a reviewer's set with one copy of all items (not the originals) with the remainder of the submittal having each item and associated copies in separate bundles.
8. Each item of an enclosure shall be "approval stamped" by the Contractor.
9. Enter the specification technical paragraph for each item in column "e" on the Transmittal Form.
10. Identify the contract drawing number that applies, if applicable in column "f" on the Transmittal Form.
11. Variations shall be identified in column "g" on the Transmittal Form and justified in the Remarks Block and five copies submitted for County Approval.

INFORMATIONAL COPY ONLY NOT FOR BIDDING

12. Cross out inapplicable portions of submitted data or point to exact equipment being used on the project.
13. Allow a minimum of 7 days for submittals requiring County Approval. Justify exceptions for shorter periods.
14. SIGN the Transmittal Form.

Supplemental procedures for Contractor submittals and substitution procedures are included in Section 01 33 00 and 01 25 00, respectively, of Special Provisions Part 2, CSI System.

INFORMATIONAL COPY ONLY - NOT FOR BIDDING

TRANSMITTAL OF SHOP DRAWINGS, EQUIPMENT DATA, MATERIAL SAMPLES, OR MANUFACTURER'S CERTIFICATES OF COMPLIANCE (Read Instructions on the reverse side prior to initiating this form)	DATE	☐ NEW SUBMITTAL ☐ RESUBMITTAL

Section I — REQUEST FOR APPROVAL OF THE FOLLOWING ITEMS (This section will be initiated by the contractor)

TO:	FROM:	CONTRACT NO.	TRANSMITTAL NO.
			PREVIOUS TRANS.NO. (If any)
SPECIFICATION SEC.NO. (Cover only one section with each transmittal)	PROJECT TITLE AND LOCATION		

ITEM NO.	DESCRIPTION OF ITEM SUBMITTED (Type, size, model number, etc.)	MFG. OR CONTR. CAT., CURVE DRAWING OR BROCHURE NO. (See instruction No.8)	NO. OF COPIES	CONTRACT REFERENCE DOCUMENT		VARIATION (See instruction No. 6)	FOR C E USE CODE
				SPEC. PARA. NO.	DRAWING SHEET NO.		
a.	b.	c.	d.	e.	f.	g.	h.

REMARKS	I certify that the above submitted items have been reviewed in detail and are correct and in strict conformance with the contract drawings and specifications except as otherwise stated. NAME AND SIGNATURE OF CONTRACTOR

Section II — APPROVAL ACTION

ENCLOSURES RETURNED (List by Item No.)	NAME, TITLE, SIGNATURE OF APPROVING AUTHORITY	DATE

INFORMATIONAL COPY ONLY - NOT FOR BIDDING

INSTRUCTIONS FOR TRANSMITTAL FORM

1. Section I will be initiated by the Contractor in the required number of copies.
2. Each transmittal shall be numbered consecutively in the space provided for "Transmittal No." This number, in addition to the contract number, will form a serial number for identifying each submittal. For new submittals or resubmittals, mark the appropriate box; on resubmittals, insert transmittal number of last submission as well as the new submittal number.
3. Submittals requiring expeditious handling will be submitted on a separate form.
4. Separate transmittal form will be used for submittals under separate sections of the specifications.
5. A check shall be placed in the "Variation" column when a submittal is not in accordance with the plans and specifications. Also, a written statement to that effect shall be included in the space provided for "Remarks."
6. Form is self-transmittal; letter of transmittal is not required.
7. When a sample of material or Manufacturer's Certificate of Compliance is transmitted, indicate "Sample" or "Certificate" in column c, section I.
8. The owner will assign action codes as indicated below in space provided in section I, column h, to each item submitted. In addition, they will ensure enclosures are indicated and attached to the form prior to return to the contractor.

THE FOLLOWING ACTION CODES ARE GIVEN TO ITEMS SUBMITTED

A – Approved as submitted

B – Approved, except as noted on drawings.

C – Approved, except as noted on drawings. Refer to attached sheet resubmission required.

D – Will be returned by separate correspondence.

E – Disapproved *(See attached)*

F – Receipt acknowledged

FX – Receipt acknowledged, does not comply as noted with contract requirements.

G – Other (Specify)

9. Approval of items does not relieve the contractor from complying with all the requirements of the contract plans and specifications.

INFORMATIONAL COPY ONLY - NOT FOR BIDDING

1-05.4 Conformity with and Deviations from Plans and Stakes

Section 1-05.4 is supplemented with the following:

(******)

The Owner shall provide a minimum of two horizontal and one vertical control points for use by the Contractor. All other survey work needed for construction and acceptance of this project is the sole responsibility of the Contractor. The Contractor shall set any construction stakes and marks needed to establish the lines, grades, slopes, and cross sections to govern his work. The Contractor shall take full responsibility for detailed dimensions, elevations, and slopes. The Engineer/Owner reserves the right to enter the work area to verify the accuracy of all marks and stakes and the accuracy of all excavation and rough grading as needed.

Replace Section 1-05.5 with the following new section and subsections:

(******)

1-05.5 Construction Stakes and Tolerances

1-05.5(1) Roadway and Utility Surveys

1. General:

The Contractor shall furnish all land surveys and construction stakeout necessary for the completion and acceptance of this project. All survey work shall be laid out and checked by a professional surveyor, licensed in the State of Washington. The Contractor shall furnish a certificate or document signed by the surveyor, certifying that the completed lines, levels, and elevations are in conformity with the contract in accordance with Section 1-05.11.

The Contractor shall verify all lines, levels, and elevations indicated in the contract before any excavation or construction begins. Any discrepancy shall be immediately brought to the attention of the Engineer and any change shall be made in accordance with his instruction. The Contractor shall not be entitled to any additional payment if he fails to report the discrepancies before proceeding with work within the area affected by the discrepancies.

2. Topographic Survey

Conduct a topographic survey and prepare a topographic map of the site with 2-foot contours, accurate to plus or minus 0.1 foot (tenth of a foot), after site civil and evaporation pond work is complete within the Limits of Construction as shown on the plans. Survey shall also include corners of Office/Storage Building and Containers 1 and 2. Submit topographic map to Engineer for review. The map shall include all information from the utility and geosynthetic surveys. Engineer may field verify the accuracy of the survey.

INFORMATIONAL COPY ONLY - NOT FOR BIDDING

3. Utility Survey

Submit a utility survey of all fencing, ditches, piping, electrical, and storm drainage, MPE wells, observation wells, and above-ground piping indicating horizontal and vertical location, and inverts as appropriate. Engineer may field verify the accuracy of the survey.

4. Geosynthetic Surveys

Submit a survey of the installed limits of the geomembrane, which shows the individual geomembrane panels and panel numbers as labeled by the geosynthetic installer. Also, the survey shall show the field seams, penetrations (boots), and repair locations and size with the unique identification name as labeled by the geosynthetic installer or CQA personnel. The Contractor is cautioned that the surveys should occur prior to placing overlaying layer(s) on the geomembrane. The Engineer may field verify the accuracy of the survey.

5. Existing Soil Stockpiles

Submit volume soil quantities of the existing soil stockpiles, which are required for the construction. The Contractor shall notify the Owner if any discrepancies exist between the existing soil stockpiles and the required installed quantities before any construction begins, while taking note that the estimated quantities listed within this document are area quantities and not actual required quantities.

1-05.5(2) Tolerances

The Contractor shall maintain a tolerance of plus or minus 0.5 foot for rough grading of cuts and excavations, and plus or minus 0.1 foot for final embankments, GCL bedding layer, landfill subgrade grades, access roads, perimeter ditches and roads, and piping as shown on the Plans. Lines and grades shall be continuous with no grade breaks as shown on the Plans.

1-05.5(3) Measurement

No specific unit of measurement shall apply to the lump sum item for “Surveying.”

1-05.5(4) Payment

Payment will be made in accordance with Section 1 04.1, for the following bid item:

“Surveying,” per lump sum.

All work associated with the materials and labor associated with “Surveying” in order to complete the construction and acceptance of this project. This includes, but is not limited to, all costs for labor, materials, tools, equipment, and services required to complete the construction of this project.

INFORMATIONAL COPY ONLY - NOT FOR BIDDING

1-05.6 Inspection of Work and Materials

Section 1-05.6 is supplemented with the following:

(******)

To ensure that the work is accomplished in accordance with the Plans and these Specifications, the Engineer and Owner will perform construction quality assurance as described in the Construction Quality Assurance (CQA) Plan provided in Appendix C.

The Contractor shall assist the Engineer and Owner in testing and measurement of the work. The Contractor shall supply manpower and equipment to assist in this testing and measurement.

1-05.10 Guarantees

Section 1-05.10 is supplemented with the following:

(******)

Additionally, if within one year after the date of Final Acceptance of the Work by the Owner, defective and unauthorized work is discovered, the Contractor shall promptly, upon written request by the Owner, return and in accordance with the Engineer's instructions, either correct such work, or if such work has been rejected by the Engineer, remove it from the Project Site and replace it with non-defective and authorized work, all without cost to the Owner. If the Contractor does not promptly comply with the written request to correct defective and unauthorized work, or if an emergency exists, the Owner reserves the right to have defective and unauthorized work corrected or rejected, removed, and replaced pursuant to the provisions of Section 1-05.7.

The Contractor agrees the above one-year limitation shall not exclude or diminish the Owner's rights under any law to obtain damages and recover costs resulting from defective and unauthorized work discovered after one year but prior to the expiration of the legal time period set forth in RCW 9.16.040 limiting actions upon a contract in writing or liability, expressed or implied, arising out of a written agreement.

1-05.11 Final Inspection

Add the following new subsection:

(******)

1-05.11(1) Record Drawing Information

The Contractor shall maintain a set of plans on site showing all deviations from the original plans, addenda, and change orders for this project. These plans shall be available for inspection by the Engineer during normal working hours. The plans shall be updated with this new information on a weekly basis. Prior to or concurrent with the physical completion date, the Contractor shall provide a neatly marked set of plans and such other appropriate

INFORMATIONAL COPY ONLY - NOT FOR BIDDING

information denoting all deviations from the Plans, addenda, and change orders and other requirements listed below:

1. Limits of GCL, geomembrane installed, together with elevations. The completed geomembrane panel layout shall be included and in accordance with the provisions of Section 1-05.5(1).
2. All piping locations, appurtenance and structure locations, and elevations of piping and all piping at structures.
3. All roads, ditches, HDPE stormwater berms, and stockpile locations and elevations within the Limits of Construction for this project.
4. All utilities and building locations.

The Contractor shall have these appropriate limits, locations, and elevations certified by a professional licensed surveyor registered in the State of Washington. The survey results for Record Drawings shall be submitted to the County on vellum and in AUTOCAD.DWG format Version LDT 2004 on a compact disk. The Contractor is cautioned that some of these surveys will need to be performed during construction prior to covering the items with other materials. The Contractor may combine these surveys with surveys required for determining pay quantities per Section 1-09.9(1) of these Specifications.

1-05.12 Final Acceptance

Section 1-05.12 is supplemented with the following:

(******)

Progress estimates shall not be construed as acceptance of any work under this contract. The Owner shall not be barred from requiring the Contractor to remove, replace, repair, or dispose of any unauthorized or defective work or from recovering damages from any such work or material.

1-05.13 Superintendents, Labor, and Equipment of Contractor

(August 14, 2013 APWA GSP)

Delete the sixth and seventh paragraphs of this section.

1-05.14 Cooperation With Other Contractors

Section 1-05.14 is supplemented with the following:

(******)

It is anticipated that the following work adjacent to or within the limits of this project will be performed by others during the life of this project:

1. Daily landfill operations, activities, and construction by others at the Ephrata Landfill will be in progress during construction. The hours of operation of the landfill are as noted in Section 1-08.0(2). The Contractor shall cooperate with the landfill staff and schedule work to ensure that there will be no interference or interruption of the existing landfill operations. The Contractor shall not use any of the landfill facilities

INFORMATIONAL COPY ONLY - NOT FOR BIDDING

except as noted in these Contract Documents. The Contractor may be required to work on weekends or after hours to ensure there is no interruption of landfill operations.

2. Utility relocations, installation, and/or normal maintenance work by telephone and power companies.

Add the following new section:

(******)

1-05.16 On-site Traffic Control

The Contractor's construction activities shall be coordinated so that landfill operations are not adversely impacted. Access for the Contractor shall be through the main entrance. The Contractor shall use the perimeter roads of the landfill for ingress and egress to the work area and staging area. Access to the landfill active face, borrow area, and other areas outside the construction and staging area, as shown on the Drawings, shall be coordinated through the Owner.

1-06 CONTROL OF MATERIAL

1-06.1 Approval of Material Prior to Use

Section 1-06.1 is supplemented with the following:

(******)

Within ten (10) days of receipt of Notice to Proceed (no later than the preconstruction conference in accordance with Section 1-08.1(1), the Contractor shall notify the Engineer, in writing, of the proposed sources of materials, suppliers, fabricators, and installers including addresses, telephone numbers, and names of contact persons. Approval by the Engineer is required for all sources of materials, suppliers, fabricators, and installers before delivery is started. See Sections 7-06, 7-10, 7-13, and 8-05 for additional submittal requirements.

1-06.1(4) Fabrication Inspection Expense

Section 1-06.1(4) is supplemented with the following:

(******)

Fabrication of an item or construction work shall not start before the Engineer has taken action on the shop drawings submittal. Any such work shall be entirely at the Contractor's risk.

The Contractor shall prepare and submit a submittal register to the Engineer no later than ten (10) working days after the Notice to Proceed is issued by the Owner. The submittal is required for this Contract. The submittal register shall also indicate the expected submittal dates.

INFORMATIONAL COPY ONLY - NOT FOR BIDDING

Submittals, shop drawings, project data, and samples shall be submitted and reviewed in the following manner:

1. The Contractor shall review, stamp with his approval, and submit postpaid with such promptness as to cause no delay in his work or in that of any other contractor, the required number of copies of all shop drawings, submittals, schedules, data, and samples required for the work.
2. The Contractor shall submit to the Engineer five (5) copies of submittals describing the actual materials and equipment to be furnished by the Contractor for this project. The submittals shall include shop drawings, manufacturer's literature, brochures, catalog cuts, and other pertinent data, which specify the materials or equipment.
3. The Engineer shall review the shop drawings within five (5) working days after receipt and will affix the Shop Drawings Review Stamp with notations thereon indicating "No Exceptions Taken," "Make Corrections Noted," "Revise and Resubmit," "Submit Specified Item," or "Rejected." The Engineer will then forward one (1) marked up copy of the submittal to the Contractor.
4. When submittals are required to be revised or corrected and resubmitted, the Contractor shall make such revisions and/or corrections and resubmit the submittal, drawings, and other material in the same manner as specified above. Except at his own risk, the Contractor shall not undertake work covered by the submittal until the submittal is returned to the Contractor, marked "No Exceptions Taken," or "Make Corrections Noted."
5. It shall be the Contractor's responsibility to clearly note on the submittals, and in writing specifically call to the Engineer's attention, any deviations from the Contract Drawings, and Specifications. No review of the submittal by the Engineer shall relieve the Contractor of full responsibility and at his own cost and expense to comply with the Contract Documents unless the deviations are clearly noted and in writing called to the Engineer's attention as above provided, in which event subsequent acceptance by the Engineer in writing shall be authority for the change or changes proposed in the submittal.
6. If corrections are required, the Contractor shall make the corrections required by the Engineer and resubmit the same number of corrected copies to the Engineer as indicated above. The Contractor shall direct specific attention in writing or, on resubmitted submittals to revisions other than the corrections requested on previous submissions. The Engineer will return, to the Contractor, copies of the resubmitted submittal in the same manner and number as before.
7. Submittals and shop drawings shall give complete information necessary for the fabrication and installation of all the materials and equipment needed to complete the work for this project. Manufacturer's standard details, catalogues, advertising literature, etc., shall not necessarily constitute all of the shop drawings required for any unit or facility. Additional shop details designed for the particular project shall be furnished when required by the Engineer.
8. The Engineer's review of and placement of the Shop Drawings Review Stamp on any shop drawing is understood to be an acceptance of the character of the details and

INFORMATIONAL COPY ONLY - NOT FOR BIDDING

not a check of any dimension or quantity and will not relieve the Contractor from responsibility for errors of any sort in shop drawing data or schedules, whether or not such errors are found by the Engineer in his review of such details.

9 The Engineer's review of and placement of the Shop Drawing Review Stamp on any shop drawing will not relieve the Contractor of responsibility for consequences due to deviations from the Contract Documents unless the Contractor has called attention to such deviations in writing.

10. No change will be made in any drawing after it has been reviewed except by the consent or direction of the Engineer in writing.
11. Submittal transmittal forms provided by the Engineer shall accompany each and every submittal.
12. A separate form shall be used for each specific item, class of material, equipment, and items specified in separate, discrete sections, for which the submittal is required. Submittals for various items shall be made with a single form when the items taken together constitute a manufacturer's package or are so functionally related that expediency indicates checking or review of the group or package as whole.
13. A unique number, sequentially assigned, shall be noted on the transmittal form accompanying each item submitted. Original submittal numbers shall have the following: "XXX," where "XXX" is the sequential number assigned by the Contractor. Resubmittals shall have the following format: "XXX Y," where "XXX" is the originally assigned submittal number and "Y" is sequential letter assigned for resubmittals, (i.e., A, B, and C being the first, second, and third resubmittals, respectively. For example, Submittal 25B is the second resubmittal of submittal 25).
14. If the Contractor proposes to provide material or equipment, which does not conform to the Specifications and Plans, the Contractor shall indicate so under "deviations" on the transmittal form accompanying the submittal copies. The Contractor shall prepare the reason for a change, including cost differential, and shall request a Change Order to cover the deviations.
15. Submittals, which do not have all the information required to be submitted, including deviations and the required signatures, are not acceptable and will be returned without review.
16. Supplemental requirements for submittals, shop drawings, project data, and samples is included in Special Provisions Part 2, CSI System.

Add the following new subsection:

(******)

1-06.1(5) Contractor's Responsibility

By approving and submitting submittals, shop drawing, and samples, the Contractor thereby represents that he has determined and verified all field measurements, field construction criteria, materials, catalog numbers and similar data, or will do so, and that he has checked and coordinated each submittal with the requirements of the work and of the Contract Document.

INFORMATIONAL COPY ONLY NOT FOR BIDDING

A copy of each approved shop drawing and each approved sample shall be kept in good order by the Contractor at the job site and shall be available to the Owner.

The Contractor shall be responsible for coordination of submittals among the related crafts and Subcontractors.

Two (2) submittals of each item requiring samples and/or shop drawings will be reviewed by the Engineer in the regular course of the Contract. However, all subsequent reviews of the same item over two (2) will be reviewed at the expense of the Contractor unless the right to an additional review without charge was previously approved in writing by the Engineer. The Contractor will be billed by the Owner for all costs incurred by the Owner in such review, including but not limited to the Engineer's fees.

1-07 LEGAL RELATIONS AND RESPONSIBILITIES TO THE PUBLIC

1-07.1 Laws to be Observed

Add the following new subsections:

(******)

1-07.1(1) Prevention of Environmental Pollution and Preservation of Public Natural Resources

The Contractor shall comply with the following environmental provisions, which are made as part of the contract documents. A copy of the environmental provisions is available to the Contractor at the Public Works' office.

If the Contractor's operations involve work outside the areas covered by the following environmental provisions, the Contractor shall advise the Owner and request a list of all additional environmental provisions covering the area involved. A copy of all additional environmental provisions is also available to the Contractor at the Public Works' office.

1. Grant County Clean Air Authority Regulation 1.
2. Grant County Health District Ordinance No. 1.
3. Grant County Ordinance No. 604495.

1-07.1(2) Grant County Standard Spill Prevention Control and Countermeasure Plan

This plan outlines requirements for construction operations on County property. The Contractor is required to submit a site-specific spill prevention control and countermeasure plan as outlined below.

1-07.1(2)A Spill Prevention, Control, and Countermeasures

Description

This work shall consist of preparing a Spill Prevention, Control, and Countermeasures Plan (SPCCP) for the construction site and preparing for implementation of the plan. This preparation includes building any containment areas for fuel storage, berms, or earthwork

INFORMATIONAL COPY ONLY - NOT FOR BIDDING

necessary to facilitate spill prevention shown in the SPCCPs submitted by the Contractor as per these specifications.

SPCCP Requirements

The Contractor shall be responsible for the preparation of a SPCCP to encompass all construction activities, and the plan is to be used for the duration of the project. The SPCCP shall be submitted to the Engineer prior to the commencement of any construction activities. The Contractor shall maintain a copy of the SPCCP with any updates at the work site.

The SPCCP shall identify construction-planning elements and recognize potential spill sources at the site. The SPCCP shall outline responsive actions in the event of a spill or release and shall identify notification and reporting procedures. The SPCCP shall also outline Contractor management elements such as personnel responsibilities, project site security, site inspections, and training.

The SPCCP shall outline what measures the Contractor shall take to prevent the release or spread of the following:

1. Any hazardous material* found on site and encountered during construction but not identified in the contract documents.
2. Any hazardous materials* that the CONTRACTOR stores, uses, or generates on the construction site during construction activities. These items include, but are not limited to, gasoline, oils, and chemicals.

   Note: *Hazardous material, as referred to within this specification, is defined in RCW 70.105.010 under "hazardous substance."

The SPCCP shall also address, at a minimum, the following project-specific information:

1. Introduction, SPCCP Elements, Site Information, Management Approval, Site Description, Planning and Recognition, Spill Prevention and Containment, Spill Response, Reporting, Program Management, and Attachments to include:

   a. Emergency Action Plan
   b. Site Plan
   c. Inspection and Incident Report Forms

Implementation Requirements

In the event that hazardous material is encountered during the course of the work, regardless of whether or not the material is shown in the Plans, the implementation of the Contractor's SPCCP shall be included in the scope of the contract and shall be carried out by the Contractor.

INFORMATIONAL COPY ONLY - NOT FOR BIDDING

The Contractor shall maintain, at the job site, the applicable equipment and material designated in the SPCCP.

1-07.1(2)B Measurement

All costs involved in the activities for the Spill Prevention, Control and Countermeasure requirements shall not be measured.

1-07.1(2)C Payment

All costs involved in the activities and the Spill Prevention, Control and Countermeasures Plan shall be considered incidental and shall be included in the other bid items. The cost shall include costs for all labor, equipment, materials, and overhead costs associated with the preparation of the construction site SPCCP requirements, as determined in the Contractor's Plan, (i.e., building berms, fuel containment areas, etc.) and any coordination and/or preparation needed prior to implementation of the SPCCP if a spill occurs.

If the Contracting Agency is responsible for the cost of response, containment, and any cleanup, then payment shall be made through existing contract items or an Equitable Adjustment in accordance with Section 1-09.4. Assignment of responsibility for payment shall be as defined elsewhere in the Contract.

If the spill is due to the Contractor's operations, equipment failure, or negligence, nothing in this section shall be construed as relieving the Contractor of responsibility for damage and all cost of response, containment, and any cleanup shall be borne by the Contractor.

1-07.1(3) Additional Permits and Requirements that Pertain to Landfill Operations

Water Use Permits: The Contractor shall supply the Agency with copies of applicable water use permit(s) for their water source. All costs associated with the acquisition and use of any water source shall be considered incidental and shall be included in the other contract bid items. It is a contractual obligation that the Contractor abides by all the requirements of these permits.

1-07.2 State Taxes

Section 1-07.2 is supplemented with the following:

(******)

The work on this contract is to be performed upon lands whose ownership obligates the Contractor to pay Sales tax. The provisions of Section 1-07.2(1) apply.

1-07.6 Permits and Licenses

Section 1-07.6 is supplemented with the following:

(******)

No hydraulic permits are required for this project unless the Contractor's operations use, divert, obstruct, or change the natural flow or bed of any river or stream, or utilize any of the waters of the State or materials from gravel or sand bars, or from stream beds.

INFORMATIONAL COPY ONLY - NOT FOR BIDDING

Section 1-07.6 is supplemented with the following:

(******)
Prior to commencement of site work, the Contractor shall obtain all required permits and licenses for the project. Anticipated permits or approval may include, but are not limited to, building permits, electrical permits (L&I), grading permit, and construction stormwater permit.

1-07.9 Wages

1-07.9(1) General
Section 1-07.9(1) is supplemented with the following:

(******)
This contract is subject to the minimum prevailing wage requirements of RCW 39.12 and to RCW 49.28 (as amended or supplemented). This project does not require the application of Federal wage laws and rules. A copy of the Washington State current prevailing wage rates is supplied in Appendix B for convenience. All other requirements of Section 1-07.9 apply.

The following new paragraph is inserted to follow the sixth paragraph:

The Contractor shall ensure that any firm (Supplier, Manufacturer, or Fabricator) that falls under the provisions of RCW 39.12 because of the definition "Contractor" in WAC 296-127-010, complies with all the requirements of RCW 39.12.

1-07.13 Contractor's Responsibility for Work

1-07.13(4) Repair of Damage
Section 1-07.13(4) is revised to read:

(August 6, 2001 WSDOT GSP Option 1)
The Contractor shall promptly repair all damage to either temporary or permanent work as directed by the Engineer. For damage qualifying for relief under Sections 1-07.13(1), 1-07.13(2), or 1-07.13(3), payment will be made in accordance with Section 1-04.4. Payment will be limited to repair of damaged work only. No payment will be made for delay or disruption of work.

Section 1-07.13(4) is supplemented with the following:

(******)
Underground utilities, groundwater monitoring wells, and landfill gas probes are located on site. The Contractor shall locate and protect underground utilities, wells, and probes, and shall take all necessary precautions to avoid disturbing any underground utilities, wells, and probe casings on or off the landfill. The Contractor shall not encroach within five (5) feet of

INFORMATIONAL COPY ONLY - NOT FOR BIDDING

any monitoring well or probe, except for wells associated with the construction project, without approval of the Engineer. If the Engineer determines that a well or probe casing has been disturbed, the Contractor shall be responsible for all damages and repair to the satisfaction of the Owner and regulatory agencies. This could include replacement of a well or probe, which could result in a cost of $50,000 or more for replacement.

1-07.16 Protection and Restoration of Property

1-07.16(1) Private/Public Property

Section 1-07.16(1) is supplemented with the following:

(******)

It is national and state policy to preserve, for public use, historical and prehistorical objects such as ruins, sites, buildings, artifacts, fossils, or other objects of antiquity that may have significance from a historical or scientific standpoint.

Archaeological or historical objects which may be encountered by the Contractor shall not be further disturbed. The Contractor shall immediately notify the Owner of any such finds.

The Owner will contact the archaeologist who will determine if the material is to be salvaged. The Contractor may be required to stop work in the vicinity of the discovery until such determination is made. If the archaeologist determines that the material is to be salvaged, the Owner may require the Contractor to stop work in the vicinity of the discovery until the salvage is accomplished.

Loss of time suffered by the Contractor due to resulting delays will be adjusted in accordance with Section 1-08.8.

1-07.17 Utilities And Similar Facilities

Section 1-07.17 is supplemented with the following:

(******)

Public and private utilities, or their Contractors, will furnish all work necessary to adjust, relocate, replace, or construct their facilities unless otherwise provided for in the Plans or these Special Provisions. Such adjustment, relocation, replacement, or construction will be done during the prosecution of the work for this project.

The existence and approximate location of underground utilities, landfill cover system, or similar facilities are indicated in the Plans insofar as it is possible to do so. The existence and approximate locations will be determined by a search of available records; however, additional utilities may be encountered and the locations of the utilities indicated therein may vary from the actual locations of the utilities as indicated. The Contractor shall take the necessary precautionary measures to protect the existing utilities, landfill cover system, and structures indicated and any of the utilities or structures, which may be encountered at the site during construction. Failure of the Owner to show the existence of subsurface objects

INFORMATIONAL COPY ONLY - NOT FOR BIDDING

or facilities on the plans shall not relieve the Contractor from the responsibility to make an independent surface check of the project site, nor relieve the Contractor from all liability for damages resulting from the Contractor's operations.

The utilities in Grant County work together in a Council to help prevent accidents and damages to underground facilities. One telephone call to 1-800-424-5555, 48 hours prior to digging (excluding weekends and holidays) will relay a message to these utilities, as necessary. These agencies will give assistance in the location of the various utilities, but such assistance shall not relieve the Contractor from the responsibility for damage incurred, except where the installations are not located as closely as is normally possible with an electronic pipe locator or meet the additional exception criteria listed herein.

The Contractor is alerted to the existence of Chapter 19.122 RCW, a law relating to underground utilities. Any cost to the Contractor incurred as a result of this law shall be at the Contractor's expense. No excavation shall begin until all known facilities in the vicinity of the excavation area have been located and marked.

Existing underground utilities, whether public or private, which are damaged by the Contractor, will be repaired by the utility Owner. The Contractor shall be liable for all costs resulting from the damage to a utility if:

1. The utility system is in a standard location adopted by the local jurisdiction, or is indicated in the Plans, and the actual location of any portion of the utility is within 24 inches horizontally of the standard location, or the location indicated on the Plans, or
2. The utility has field located and marked its facilities and the actual location of any portion of the utility is within 24 inches horizontally of said location mark, or
3. The utility system is visible or has become visible or can be reasonably assumed to exist at the location due to visible evidence prior to the damage, or
4. The Contractor has failed to provide the required notification to the utility owner of the utility that has been damaged.

   The depth of the utility, if indicated, is for the Contractor's convenience only, and the Contractor's responsibility for damage as specified above shall not be altered due to the actual depth being different or other than that indicated on the plans.

   The Contractor shall notify the proper utility immediately upon breakage or damage to any utility line or appurtenance, or the interruption of their service. He shall notify the proper utility when his operations may affect the service or cause damage to the utility involved.

   Any loss of time suffered by the Contractor due to delay and removal or relocation of any utility or other facility by others may be adjusted in accordance with Section 1-08.8 permitting extensions of time.

INFORMATIONAL COPY ONLY - NOT FOR BIDDING

The following addresses and telephone numbers of utility companies known or suspected of having facilities within the project limits are supplied for the Contractor's convenience:

Grant County PUD No.2, 30 C St. S.W., Ephrata, WA 98823	(509) 754-3451
U.S. West Co., 324 S. Ash, Moses Lake, WA 98837	(509) 765-2614
General Tel. Co., 320 E. Penny Rd., Wenatchee, WA 98801	(509) 662-9203
CenturyTel (formerly PTI Communications)	(800) 550-8110
Sprint Telephone, P.O. Box 360, Sunnyside, WA 98944	(800) 488-4214

1-07.18 Public Liability and Property Damage Insurance

Item No. 1 of the first paragraph of Section 1-07.18 is revised to read:

(January 5, 2004 WSDOT GSP Option 2)
Item number 1 in the first paragraph of Section 1-07.18 is deleted.

Item No. 2 of the first paragraph of Section 1-07.18 is revised to read:

(January 3, 2011 WSDOT GSP Option 6)
Reduced Insurance Requirement
Section 1-07.18 is revised as follows:

2. Commercial General Liability (CGL) Insurance written under ISO Form CG0001 or its equivalent with minimum limits of $1,000,000 per occurrence and in the aggregate for each one year policy period. Products and completed operations coverage shall be provided for a period of three years following Substantial Completion of the work.

Section 1-07.18 is supplemented with the following:

(******)
Change "Names the Contracting Agency as an additional insured," to read "Names the Owner and Parametrix, Inc. as an additional insured."

1-07.23 Public Convenience and Safety

Section 1-07.23 is supplemented with the following:

(******)
Ephrata Landfill will be open to the public and solid waste haulers during construction. The Contractor shall provide for traffic control during this project when the Contractor's construction activities impact landfill operations as determined by the Owner. This work will be considered incidental to the project, and no direct payment will be made for traffic control.

INFORMATIONAL COPY ONLY - NOT FOR BIDDING

Add the following new section and subsections:

(******)

1-07.28 Health and Safety Plan

1-07.28(1) Present Site Characterization

The Landfill received mixed municipal solid waste. The exact nature of materials and wastes disposed of at the Landfill is unknown. The possibility exists of encountering gases, liquids, and/or other substances during the work that may be potentially hazardous to the safety and health of personnel, especially those working in the vicinity of open excavations and pipes venting gases. Since other substances and gases may be present and may be found during work pursuant to the Contract, the Contractor shall consider the possibility of encountering other substances in preparing the Site Safety and Health Program.

The project will involve work next to and over sections of the closed Landfill and connection to wells containing contaminated groundwater and vapors. The Contractor shall be aware of the potential for landfill gas, landfill gas condensate, contaminated groundwater, contaminated soils, and contaminated vapors to be present. Contaminants may include, but are not limited to methane gas, petroleum hydrocarbons, toluene, xylene, ethylbenzene, trimethylbenzene, propylbenzene, and tetrachloroethene.

The Contractor shall provide all personnel working on the project with required orientation and training on the potential hazards anticipated and the appropriate use of safety equipment.

1-07.28(2) Contractor's Responsibility for Health and Safety for Hazardous Waste Operations

Due to the nature of the Ephrata Landfill, the Contractor is cautioned that there is a possibility of encountering potentially hazardous gases, liquids, and other substances that may be harmful to personal health and safety while performing elements of the work. The Contractor shall do whatever is necessary for health and safety and be solely and completely responsible for conditions on the site for this project, including safety of all persons, employees, and property during the contract period. This requirement shall apply continuously and not be limited to working hours.

For all work conducted for this project at the Ephrata Landfill, the Contractor shall ensure compliance with all requirements of the Federal Occupational Health and Safety Act of 1970 (OSHA), including OSHA 29 CFR Part 1910.120 Hazardous Waste Operations and Emergency response, Final Rule, and with the Washington Industrial Health and Safety Act of 1973 (WISHA), WAC 296 62 Part P, as these requirements apply to health and safety provisions for hazardous waste operations, and all other applicable federal, state, county, and local laws, ordinances, codes, the requirements set forth herein, and any regulations that may be specified in other parts of this Contract.

INFORMATIONAL COPY ONLY - NOT FOR BIDDING

The Contractor shall at all times provide proper facilities for safe access to the work by authorized persons. The Contractor shall develop and maintain, for the duration of this contract, a site-specific health and safety plan that will effectively incorporate and implement all required safety provisions.

A Health and Safety Plan shall be submitted by the Contractor within 14 days after award of the Contract. The Health and Safety Plan shall be signed by a certified industrial hygienist registered in the State of Washington. The Engineer will review the Contractor's Health and Safety Plan, but this is not intended as approval of the adequacy of the Contractor's safety supervisor, the safety program, or any safety measures taken in, on, or near the work areas.

The Site Health and Safety Plan shall, at a minimum, include the following considerations:

1. Names of key personnel and alternates responsible for site health and safety and appointment of a Site Health and Safety Officer.
2. Health and safety risk analysis for each site task and operation.
3. Employee training assignments.
4. Personal protective equipment to be used by employees for each of the site tasks and operations being conducted.
5. Medical surveillance requirements.
6. Frequency and types of air monitoring, personnel monitoring, and environmental sampling techniques and instrumentation to be used. Methods of maintenance and calibration of monitoring and sampling equipment to be used.
7. Site control measures.
8. Decontamination procedures.
9. Site standard operating procedures.
10. Emergency response plan including the necessary personal protective equipment and other equipment.
11. Confined space entry procedures.
12. Spill containment program.

In the event the Health and Safety Plan is found to be inadequate, as determined by any regulatory agency of jurisdiction, to protect the employees and the public, the Plan shall be modified to meet the requirements of those regulatory agencies.

1-07.28(3) Measurement

No specific unit measurement shall apply to the lump sum item for "Site Health and Safety."

1-07.28(4) Payment

The lump sum contract price for "Site Health and Safety" shall include all costs for the work required to meet the requirements specified in Section 1-07.28.

INFORMATIONAL COPY ONLY - NOT FOR BIDDING

1-07.29 Emergency Phone Numbers

The Contractor shall supply to the Owner the names and phone numbers of responsible personnel representing the Contractor and each subcontractor for the purpose of contacting these individuals in the event of an emergency.

1-08 PROSECUTION AND PROGRESS

Add the following new section and subsections:

(******)

1-08.0 Preliminary Matters

1-08.0(1) Preconstruction Conference

The Owner will provide the Contractor with five (5) copies of the Contract Documents. A preconstruction conference may be held within ten (10) days after the contract award.

1-08.0(2) Hours of Work

Normal hours of operation for the landfill are:

Monday through Friday – 7:30 a.m. to 3:00 p.m.
Saturday – 10:00 a.m. to 3:00 p.m.
Sunday – Closed

The Contractor may work additional hours at his option provided no noise limitations are violated. The Contractor's additional hours may be limited to the hours between 7:00 a.m. and 7:00 p.m. The Contractor must coordinate his construction schedule and access with the landfill manager and accept responsibility for securing and protecting the property if he opts to work other than the normal operating hours.

1-08.0(3) Weekly Construction Meetings

The following are requested to attend the weekly construction meetings:

1. County Representatives: Project Engineer(s), Public Works Construction Inspector(s), Engineer (if required).
2. Contractor Representatives: Project Manager (Superintendent), Major Subcontractors (geosynthetic, intermodal containers, etc.) when working on site, and Project Foreman.
3. Design and CQA Engineer: Project Design Engineer, CQA Engineer, additional CQA personnel, and project manager (as requested).
4. Other Interested Parties: Health Department, and Department of Ecology (attendance not mandatory).

The agenda will vary with the work completed and upcoming, but will generally follow this format: Schedule, Upcoming Work, Problems Encountered/Corrected, Testing, Regulatory and Environmental Issues, and Measurement and Payment.

INFORMATIONAL COPY ONLY - NOT FOR BIDDING

The schedule shall be updated weekly for the construction meeting. Any changes to the Contractor's plans shall be given to the County at these meetings.

1-08.1 Subcontracting

Section 1-08.1 is supplemented with the following:

(October 12, 1998 WSDOT GSP Option 1)

Prior to any subcontractor or agent beginning work, the Contractor shall submit to the Engineer a certification (WSDOT Form 420-004) that a written agreement between the Contractor and the subcontractor or between the subcontractor and any lower tier subcontractor has been executed. This certification shall also guarantee that these subcontract agreements include all the documents required by the Special Provision **Federal Agency Inspection**.

A subcontractor or lower tier subcontractor will not be permitted to perform any work under the contract until the following documents have been completed and submitted to the Engineer:

1. Request to Sublet Work (Form 421-012), and
2. Contractor and Subcontractor or Lower Tier Subcontractor Certification for Federal-aid Projects (Form 420-004).

The Contractor's records pertaining to the requirements of this Special Provision shall be open to inspection or audit by representatives of the Contracting Agency during the life of the contract and for a period of not less than three years after the date of acceptance of the contract. The Contractor shall retain these records for that period. The Contractor shall also guarantee that these records of all subcontractors and lower tier subcontractors shall be available and open to similar inspection or audit for the same time period.

1-08.3 Progress Schedule

Section 1-08.3 is supplemented with the following:

(******)

The Contractor shall submit a construction schedule summarizing planned construction activities, noting sequential interrelationships, milestones, durations, and terminations in accordance with Section 1-08.5.

The schedule shall be developed by a critical path, bar chart, or similar type method.

1-08.4 Prosecution of Work

Amend the third sentence to read:

(******)

"The Contractor shall commence construction activities on the Project Site within ten (10) calendar days of the date specified in the Notice to Proceed."

INFORMATIONAL COPY ONLY - NOT FOR BIDDING

Section 1-08.4 is supplemented with the following:

(******)
Once the Contractor has commenced operations under this contract, the Contractor shall diligently prosecute the same to physical completion within the time provided for in the Special Provisions under Time for Completion.

All costs incurred by the Contractor as a result of this scheduling requirement shall be considered incidental to and included in other applicable items of work.

1-08.5 Time for Completion

Section 1-08.5 is replaced with the following:

(******)
Upon completion of all work required by the Contract, the Engineer pursuant to Section 1-05.11 will advise the Contractor and Owner in writing of the date on which such work was substantially completed, taking into account weather delays and other approved time extensions. Such notification of date of completion shall not constitute acceptance of the work by the Owner (see Section 1-05.12 Final Acceptance).

The work as described in Section 1-04.3 and specified in the Contract Documents shall be completed in its entirety within 80 working days. The Contract time shall commence on the day that the Owner issues the Notice to Proceed to the Contractor.

Should the Contractor desire to perform work on any Saturday, Sunday, or Holiday during the life of this contract, the Contractor shall request written permission from the Owner after submitting a new work schedule specifying the exact dates on which the work is to be performed. The Owner will consider the Contractor's request and may either approve or deny any or all working dates or shifts contained in the new progress schedule.

No additional compensation shall be given the Contractor for any delays and costs incurred because of this provision. All costs incurred shall be considered incidental to and included in other applicable contract items.

1-08.9 Liquidated Damages

Replace the first paragraph of Section 1-08.9 with the following:

(******)
Time is of the essence for this Contract. Any delay in the prosecution of the work will inconvenience and be expensive to the Owner. The costs to the Owner in the administration of the Contract, including engineering, inspection, and supervision will be increased by such delays.

As liquidated damages to the Owner caused by the failure to complete construction of this Contract within the stipulated Times for Completion, the Contractor agrees to pay and

INFORMATIONAL COPY ONLY - NOT FOR BIDDING

authorizes and directs the Owner to deduct from any money due or coming due to the Contractor the sums calculated per the liquidated damages formula in Section 1-08.9 of the Standard Specifications.

1-09 MEASUREMENT AND PAYMENT

1-09.1 Measurement of Quantities

Section 1-09.1 is supplemented with the following:

(******)

The Contractor shall provide all surveys for pay items measured by the linear foot, cubic yard, or square yard. Linear foot measurement will be along the invert pipe. Cubic yard measurement for standard embankments and excavation will be by cross sectional survey. Square yard measurements for the GCL, geomembrane, cushion layer and crushed surfacing; and cubic yard measurements for the bedding layer, and side slope layer, will be by horizontal (plan) area. Standard square yard measurements will be by horizontal (plan) area. All surveys for pay items will be by a professional land surveyor licensed in the State of Washington.

The Contractor shall submit a comprehensive breakdown of items constituting each lump sum price in a supplemental schedule of unit prices and shall show the value assigned to each item, including an allowance for overhead and profit. Submittal shall be within ten (10) days of receipt of Notice to Proceed (no later than the preconstruction conference in accordance with Section 1-08.1(1). Upon acceptance of the supplemental schedule of unit prices by the Engineer, the supplemental schedule of unit prices shall be used as the basis for all requests for payment of lump sum items except for mobilization.

1-09.7 Mobilization

Section 1-09.7 is supplemented with the following:

(******)

Mobilization consists of preconstruction expenses and the costs of preparatory work and operations performed by the Contractor which occur before 10 percent of the total original contract amount is earned from other contract items. Items which are not to be included in the Mobilization item includes but are not limited to:

1. Any portion of the work covered by the specific contract item or incidental work which is to be included in a contract item or items.
2. Profit, interest on borrowed money, overhead, or management costs.
3. Any cost of mobilizing equipment for force account work.

Based on the lump sum contract price for “Mobilization”, partial payments will be made when 10 percent of the total original contract amount is earned from other Contract items, excluding amounts paid for materials on hand.

INFORMATIONAL COPY ONLY - NOT FOR BIDDING

Nothing herein shall be construed to limit or preclude partial payments otherwise provided by the Contract.

1-09.9 Payments

Section 1-09.9 is supplemented with the following:

(******)

The cutoff day for quantity measurements will be the 25th of each month. If the 25th falls on a weekend or holiday, the Friday previous will be the cutoff day.

END OF DIVISION 1

INFORMATIONAL COPY ONLY - NOT FOR BIDDING

This Page Intentionally Left Blank

INFORMATIONAL COPY ONLY - NOT FOR BIDDING

DIVISION 2 EARTHWORK

2-03 ROADWAY EXCAVATION AND EMBANKMENT

2-03.1 Description

Section 2-03.1 is replaced with the following:

(******)

The work described in this Section, regardless of the nature or type of the materials encountered, includes excavating and constructing berms, landfill refuse, and road embankment; grading the landfill subgrade, roadway; filling cracks, fissures, holes, overexcavated areas, and other void spaces during subgrade preparation; placement and compaction of bedding layer, embankments, and subgrade materials; and all haul, and stockpile of materials. These activities may be performed in making cuts, embankments, slopes, ditches, berms, performing grading, and in completing related work.

This work includes the following:

1. Excavation and embankment for constructing the prepared subgrade for the landfill cap area, evaporation pond area, waterline and discharge pipes, pretreatment building area, and stockpiling excavated materials in designated locations.
2. Placement of the bedding layer.
3. Placement of the composite geosynthetic liner systems:
   a. Evaporation Pond Area: Geocomposite, HDPE geomembrane, geonet, and primary HDPE geomembrane.
   b. Landfill Cap Area: PVC geomembrane, and geotextile, where shown.
   c. Pretreatment Building Area: Geocomposite, PVC geomembrane, and geocomposite.
4. Placement of the drainage soil layer and rock armor layer.
5. Construction of the perimeter roadway.
6. Installation of pond leak detection system.
7. Installation of pretreatment building gas barrier and vent system.

All work described herein shall conform to the alignment and grade as shown on the Drawings or as established by the Engineer. The Contractor shall maintain a tolerance in accordance with Section 1-05.5(2) of these Specifications. If Contractor overexcavates beyond this tolerance the Engineer may require replacing in accordance with 2 03.3(14)C Method B. On site haul routes shall be maintained and restored by the Contractor, if directed by the Engineer or Owner.

INFORMATIONAL COPY ONLY - NOT FOR BIDDING

Replace Section 2-03.2 with the following new section:

(******)

2-03.2 Materials

Materials shall conform to the following sections of these Specifications:

Embankment	9-37.1
Liner cover Layer	9-37.2
Bedding Layer	9-37.3
Rock Armor	9-37.4
Crushed Surfacing Top Course	9-37.5
Pipe Zone Bedding	9-03.12(3)

2-03.3 Construction Requirements

2-03.3(7) Disposal of Surplus Material

2-03.3(7)A General

Section 2-03.3(7)A is replaced with the following:

(******)

Surplus excavation, if any, shall be hauled and placed in the designated stockpile sites as directed by the Owner and described in Section 3-02.

Refuse or waste encountered during excavation to the lines and grades shown on the Drawings shall be hauled and placed in the landfill's current disposal area as directed by the Owner. The Contractor will not be charged to dispose of such refuse in the landfill. Any wet materials shall be stockpiled on liners for drainage until it passes the paint filter test.

Debris, such as concrete, pipes, conduit, wires, rebar, vaults, etc., shall be dispose of in the landfill.

2-03.3(14) Embankment Construction

2-03.3(14)B Earth Embankment Construction

Section 2-03.3(14)B is supplemented with the following:

(******)

Embankment and bedding layer shall be placed in layers of uniform thickness in accordance with Method C, Section 2-03.3(14)C.

The subgrade soils below the embankment and below the bedding layer shall be compacted to a smooth, firm, and stable condition that allows for compaction of overlying layers in accordance with Section 2-06.

INFORMATIONAL COPY ONLY - NOT FOR BIDDING

2-03.3(14)C Compacting Earth Embankments
(*******)
Section 2-03.3(14)C, second paragraph under Method B, first sentence is replaced with the following:

In the top two feet, layers shall not exceed 12 inches in depth after compaction and shall be smooth and unyielding.

2-03.3(14)D Compaction and Moisture Control Tests
Section 2-03.3(14)D is replaced with the following:

(******)
Maximum density and optimum moisture content for granular soils will be as determined by ASTM D1557. Compaction and moisture control testing for the bedding layer shall be as described in Section 2-03.3(14)N. The Contractor shall collect and test two (2) representative samples of the soils for maximum density and optimum moisture, as directed by the Engineer.

Add the following new subsections:

(******)
2-03.3(14)N Bedding Layer
The bedding layer shall conform to Section 9-37.3, and shall be from Contractor provided sources. The bedding layer shall be placed in accordance with Section 2-03.3(14)B. Compaction shall be in accordance with Section 2-03.3(14)C.

The bedding layer shall be smooth rolled by a compactor, and the surface shall be maintained in the specified condition and moisten-condition until the geosynthetic material is installed; therefore, the compaction equipment shall remain onsite until the last of the geosynthetic materials are installed. The bedding layer shall be firm and unyielding with no abrupt elevation changes, voids, cracks, or standing water. The bedding layer shall have no ruts or ridges greater than 1/2 inch; therefore, tracking of the bedding layer with excavator or dozer will not be allowed for compaction.

The bedding layer surface shall be smooth and free of vegetation, sharp-edged rocks, stones, sticks, debris, and other foreign matter that could contact the overlying geosynthetics. The bedding layer shall be rolled with a smooth-drum compactor of sufficient weight to remove any wheel ruts, footprints, or other abrupt grade changes prior to placing the overlying geosynthetics. All protrusions extending or protruding more than 1/2 inch from the bedding layer shall be removed, or pushed into the surface with a smooth-drum compactor.

2-03.3(14)O Liner Cover Layer
The liner cover layer shall conform to Section 9-37.2, and shall be from Contractor provided sources. The liner cover layer shall be placed in one 18-inch-thick layer over the

INFORMATIONAL COPY ONLY - NOT FOR BIDDING

geomembrane or geotextile as shown on the Drawings to provide a firm, stable condition. Caution shall be taken to assure that the underlying geosynthetics are not damaged during placement of the liner cover layer. The Contractor shall exercise caution and shall alter the placement method if damage to the geosynthetics occurs or is imminent. Placement shall be with low ground pressure tracked equipment as approved by the Engineer. The equipment shall meet the manufacturer's standard for low ground pressure.

The liner cover layer shall not be dumped directly onto the geosynthetics or spread by pushing it downhill. The liner cover layer shall be dumped from the hauling vehicle onto already placed material and then bladed into place, across or up the slope. Dumping of limited quantities of liner cover layer in front of the bladed soil, from front-end loaders or backhoes at low heights, to eliminate folds in the geosynthetics may be performed if approved by the Engineer. The dozer shall not be allowed to "crowd" the blade into the liner cover layer and drag (back-blade) the soil over the surface of the geosynthetic materials. Other than for liner placement activities as described above, hauling and other equipment shall operate on designated as access roads, unless approved by the Engineer. No sharp turns or sudden turning of tires or tracks over the liner is allowed. Any areas where sharp turns, quick stops, driving too fast, or improper driving onto thin sections of soil cover shall be uncovered by the Contractor and repaired if required as directed by the Engineer.

Liner cover layer shall not be placed until the underlying geosynthetics have been surveyed and approved for covering by the Contractor and the Engineer. **Liner cover layer shall be placed on the geosynthetics at the same temperature as when the geomembrane was installed.** This may require the Contractor to stockpile liner cover layer material during the day, setting fixing berms before ambient temperatures drop, and spreading the soil in the morning or at night when temperatures are cool and geomembrane is laying flat.
The Contractor shall not cover over wrinkles that could fold in the opinion of the CQA Engineer. If the wrinkle does not dissipate upon cooling, then the Contractor shall cut the geomembrane, lay flat the wrinkle, and repair in accordance with Section 8-05.

2-03.3(14)P Oversize Rock Disposal
Oversize rock shall be disposed of at the on site location designated by the Owner. The Contractor shall neatly dress the oversize rock disposal area prior to demobilization.

2-03.4 Measurement
Section 2-03.4 is replaced with the following:

(******)

1. "Excavation and Haul", per cubic yard.

Material will be measured by 50-foot cross sections, or other approved methods, within the excavation areas shown on the Drawings. The locations of the cross sections will be mutually agreed to with the Owner.

INFORMATIONAL COPY ONLY - NOT FOR BIDDING

2. “Embankment and Compaction”, per cubic yard.
Material will be measured by 50-foot cross sections, or other approved methods, within the excavation areas shown on the Drawings. The locations of the cross sections will be mutually agreed to with the Owner.

3. “Bedding Layer”, per cubic yard.
Material will be measured by the neat line depth shown on the Drawings and the horizontal area placed within limits of the liner system shown on the Drawings.

4. “Liner Cover Layer”, per cubic yard.
Material will be measured by the neat line depth shown on the Drawings and the horizontal area placed within the limits of the liner system shown on the Drawings.

5. “Rock Armor from Stockpile”, per cubic yard.
Material will be measured by the neat line depth shown on the Drawings and the horizontal area placed within the limits as shown on the Drawings.

2-03.5 Payment

Section 2-03.5 is replaced with the following:

(******)

1. “Excavation and Haul”, per cubic yard.
The unit contract price per cubic yard shall be full pay for all materials, labor, tools, equipment, and incidentals required to construct an approved subgrade for the bedding layer including surveying and staking, excavation, loading, hauling, stockpiling or otherwise removing and disposing of soils, unacceptable materials, and a minor amount of refuse to the lines and grades shown on the Drawings.

2. “Embankment and Compaction”, per cubic yard.
The unit contract price per cubic yard shall be full pay for all materials, labor, tools, equipment, and incidentals required to construct an approved prepared subgrade including surveying and staking, loading, hauling, placing and compacting soils to the lines and grades shown on the Drawings. This work shall also include removal of material not suitable for embankment from the surface of any site and costs for constructing, and maintaining haul roads associated with access to the construction areas.

3. “Bedding Layer”, per cubic yard.
The unit contract price per cubic yard shall be full pay for all materials, labor, tools, equipment, and incidentals required to haul imported material, stockpile, remove deleterious substances, place, compact, test, and shape the bedding layer to the lines and grades shown on the Drawings.

4. “Liner Cover Layer”, per cubic yard.
The unit contract price per cubic yard shall be full pay for all materials, labor, tools, equipment, and incidentals required to haul imported material, stockpile, remove

INFORMATIONAL COPY ONLY - NOT FOR BIDDING

deleterious substances, place and shape the liner cover layer ready for placement of rock armor.

5. "Rock Armor from Stockpile", per cubic yard.
The unit contract price per cubic yard shall be full pay for all materials, labor, tools, equipment, and incidentals required to furnish, haul on-site material, and remove deleterious substances; and place and shape the rock armor.

2-06 SUBGRADE PREPARATION

2-06.1 Description

Section 2-06.1 is supplemented with the following:

(******)
This work also consists of preparing the bedding layer for geosynthetics installation.

2-06.3 Construction Requirements

Add the following new subsection:

(******)
2-06.3(3) Subgrade for Geosynthetics (New Section)
The Contractor shall perform all excavation and embankment construction necessary to provide the prepared subgrade for placement of bedding layer. The bedding layer shall be to the lines and grades shown on the Drawings. The Contractor shall shape the bedding layer to a smooth continuous grade and compact to a firm, non yielding condition such that the material attains at least 95 percent of its maximum dry density based on ASTM D1557, Modified Proctor. Soft or otherwise unsatisfactory subgrade material shall be removed and replaced with satisfactory excavated material or other approved material as directed by the Engineer. Low areas resulting from removal of unsatisfactory material shall be brought up to required grade with satisfactory materials, and the entire bedding layer shall be shaped and compacted as specified. The bedding layer shall not have any ruts or ridges greater than 1/2 inch.

Before geosynthetics are installed, the Contractor shall:

1. Remove from the bedding layer immediately prior to installing the geosynthetics all brush, weeds, vegetation, grass, and other debris.
2. Properly dispose of all debris as directed by the Engineer.
3. Maintain the bedding layer in the required condition until the geosynthetics are installed.
4. The bedding layer shall be free of surfaces, which are muddy, frozen, or contain frost, prior to placement of the geosynthetics.
5. Test the compaction of the bedding layer every 12,500 square feet by the Contractor. The compaction testing shall be performed under the direction of a

INFORMATIONAL COPY ONLY - NOT FOR BIDDING

professional engineer registered in the State of Washington. Results shall be stamped and submitted to the Engineer.

2-06.5 Measurement and Payment

Section 2-06.5 is supplemented with the following:

(******)

The prepared subgrade for bedding layer will not be measured for payment. This work will be considered incidental to the bedding layer under this Contract and no additional direct payment shall be made.

2-07 WATERING

2-07.3 Construction Requirements

Section 2-07.3 is supplemented with the following:

(******)

The Contractor shall use water for embankment, bedding layer placement and dust control, as needed, at all times during construction, in the staging area and along haul roads within the facility to ensure activities do not produce visible emissions above 10 percent opacity in accordance with WAC 173 400. The water shall be of sufficient quantity and quality to perform the construction or as directed by the Engineer. Water for this project shall be purchased by the Contractor at the Contractor's sole expense.

2-07.4 Measurement

Section 2-07.4 is replaced with the following:

(******)

No measurement will be made for watering.

2-07.5 Payment

Section 2-07.5 is replaced with the following:

(******)

No payment will be made for watering.

Replace Section 2-10 with the following new section and subsections:

(******)

2-10 DITCH EXCAVATION

2-10.1 Construction Requirements

Soil excavated from the construction of perimeter surface water ditches shall be stockpiled in the excavation stockpile, or used for embankment material, as directed by the Engineer.

INFORMATIONAL COPY ONLY - NOT FOR BIDDING

2-10.5 Payment

Ditch construction shall be considered incidental to other items in this Contract and no additional payment will be made.

2-11 TRIMMING AND CLEANUP

2-11.1 Description

Section 2-11.1 is supplemented with the following:

(******)

This work also extends to the evaporation pond area, pretreatment building areas, staging areas, stockpile areas, storage areas, haul routes, and other areas affected by the Contractor's operations.

2-11.3 Construction Requirements

Delete this Section and replace it with the following:

(******)

The Contractor shall, as directed by the Engineer, remove from the Owner's property and from all public and private property, at the Contractor's own expense, all temporary structures, rubbish, and waste materials resulting from the Contractor's operations. Waste materials meeting the acceptance criteria for the Ephrata Landfill may be disposed of in the landfill if the waste is from work on this project, at no cost to the Contractor.

Throughout the period of construction, the Contractor shall keep the site clean and free from all rubbish and debris and shall promptly clean up all or any portion of the site when notified to do so by the Engineer. Care shall be taken to prevent spillage on the roads over which hauling is done, and any such spillage or debris deposited due to Contractor's operations shall immediately be cleaned up. The Contractor shall promptly remove from any parts of the working area all unused materials, surplus earth, and debris. Construction areas shall be left in a clean, neat and acceptable condition at the earliest time following completion of that portion of work.

During all phases of the construction work, the Contractor shall take precautions to abate a dust nuisance or a windblown sand nuisance, by cleaning up, sprinkling with water, or other means as necessary to accomplish results satisfactory to the Engineer in accordance with Section 2-07.

Upon completion of the work and prior to Final Inspection, the entire site of operations shall be cleared of equipment, unused materials, and rubbish, so as to present a clean and neat appearance.

INFORMATIONAL COPY ONLY - NOT FOR BIDDING

Replace Section 2-11.4 with the following new section:

(******)

2-11.4 Measurement

No specific unit of measurement shall apply to the lump sum item of trimming and cleanup.

2-11.5 Payment

Section 2-11.5 is supplemented with the following:

(******)

Payment will be made in accordance with Section 1-04.11, for the following bid item "Trimming and Cleanup", per lump sum.

END OF DIVISION 2

INFORMATIONAL COPY ONLY - NOT FOR BIDDING

This Page Intentionally Left Blank

INFORMATIONAL COPY ONLY - NOT FOR BIDDING

DIVISION 3 AGGREGATE PRODUCTION AND ACCEPTANCE

3-01 PRODUCTION FROM QUARRY AND PIT SITES

3-01.1 Description

Section 3-01.1 is supplemented with the following:

(******)

This work also extends to the production of liner cover layer, and bedding layer, if needed; and embankment.

3-02 STOCKPILING AGGREGATES

3-02.1 Description

Section 3-02.1 is supplemented with the following:

(******)

This work also extends to the stockpiling of bedding layer, and liner cover layer, and surplus excavation materials, if needed.

3-02.2 General Requirements

3-02.2(7) Removing Aggregates From Stockpiles

Section 3-02.2(7) is supplemented with the following:

(******)

The rock armor layer 8-inch minus for use on this project at the locations and quantities shown on the Drawings, and for the unit prices listed below: (Contractor's informational purposes only).

Location	Material	Cost of Production	Sales /Use Tax Paid	Price to Contractor
	Rock Armor 8-inch minus	$2.15/CY	None	No Charge

The Contractor may obtain material from other sources provided they are approved by the Engineer and provided the Contractor makes all arrangements and pays all expenses required for the acquisition of the materials.

INFORMATIONAL COPY ONLY - NOT FOR BIDDING

3-02.5 Payment

Section 3-02.5 is supplemented with the following:

(******)

The unit contract price for "Rock Armor Layer" shall be full payment for the loading, hauling, and placing of materials provided in stockpile and no separate measurement or payment will be made.

END OF DIVISION 3

INFORMATIONAL COPY ONLY - NOT FOR BIDDING

DIVISION 4 BASES

4-04 BALLAST AND CRUSHED SURFACING

4-04.4 Measurement

Section 4-04.4 is replaced with the following:

(******)

Material will be measured by the neat line depth shown on the Drawings and the horizontal area placed within limits of the crushed surfacing as shown on the Drawings.

4-04.5 Payment

Section 4-04.5 is replaced with the following:

(******)

"Crushed Surfacing, In-Place," per square yard.

The unit contract price per square yard shall be full pay for all materials, labor, equipment, hauling, stockpiling, and incidentals required to remove deleterious substances, place and shape crushed surfacing on approved embankment as shown on the Drawings.

END OF DIVISION 4

INFORMATIONAL COPY ONLY - NOT FOR BIDDING

This Page Intentionally Left Blank

INFORMATIONAL COPY ONLY - NOT FOR BIDDING

DIVISION 7 DRAINAGE STRUCTURES, STORM SEWERS, SANITARY SEWERS, WATER MAINS, AND CONDUITS

Add the following new section:

(******)

7-06 LEAK DETECTION SYSTEM, WATERLINE, DISCHARGE PIPE, AND VENT PIPE

7-06.1 Description

This work consists of installing a HDPE monitoring pipe, which will be located between the two HDPE pond liners with a sump in the evaporation pond, and the installation of a pretreatment building discharge pipe. The Contractor shall install the Owner supplied monitoring pipe, which is located near the landfill's pump house in the southwest corner of the old closed landfill.

Work also consists of installing a discharge HDPE pipe from the train containers to the evaporation pond as shown on the Drawings. An existing waterline shall be connected to an extended to the train containers, which will involve installing two water bibs: one in the building, and one between the train containers.

A vent pipe is required for the vent system beneath the building. The vent system shall contain a PVC perforated pipe along the length of the building, which is connected to a vertical vent pipe connected to the building.

7-06.2 Materials

Materials shall meet the requirements of the following sections:

HDPE Pipe and Fittings	9-05.21
Geomembrane	9-36.2
Geocomposite	9-36.3
Geotextile	9-36.4
Geonet	9-36.5

Provide all first quality, new materials, free from defects, and suitable for the intended use and space. Where two or more units of the same class of material are required, provide products of a single manufacturer.

Unless otherwise indicated, provide materials and equipment that are the standard products of manufacturers regularly engaged in the production of such materials and equipment. Provide the manufacturer's latest standard design that conforms to these Specifications.

INFORMATIONAL COPY ONLY - NOT FOR BIDDING

7-6.3 Submittals

The Contractor shall provide certification that the person(s) butt-fusion and/or electro-fusion welding the HDPE pipe and fitting has been certified by the manufacturer as capable of welding HDPE pipe and fittings.

The Contractor shall provide certification that the pipe materials used meet material specifications except for the County supplied leak detection pipe.

7-06.4 Construction Requirements

7-06.4(1) General

The evaporation pond's leak detection system and pretreatment building discharge pipe shall be constructed of HDPE piping and fittings in conformity with the line and grades as shown on the Drawings and in accordance with Section 7-08.3. All pipe grades shall be continuous between grade breaks.

7-06.4(2) HDPE Pipe and Fittings

All pipes shall be supplied in the nominal diameter shown on the Drawings. Perforated pipe shall be installed where shown on the Drawings.

The interior of all piping shall be free of material and have no shavings, loose pieces, or sediment contained within the piping.

All solid wall pipe shall have watertight joints unless otherwise specified on the Drawings. All joints shall be butt-fusion or properly executed electro-fusion welded. No non-fusion couplers will be acceptable.

Joining pipe by butt-fusion or electro-fusion welding shall be conducted according to manufacturer's recommendation. Butt-fusion shall be done with equipment recommended by the pipe manufacturer. Care shall be taken to ensure alignment of perforations during welding.

Pipe and joints shall be free from burrs, nicks, gouges deeper than 5 percent of nominal wall thickness, surface cracks, or defects. Pipe shall be open, clean, and free draining upon completion of installation and covered with drain rock.

Pipe shall be stored on flat ground to prevent bowing. Pipe determined by the Engineer to be damaged during storage or installation shall be replaced at the Contractor's expense.

Butt-fusion shall be made only when the pipe materials to jointed are clean and dry, and only at ambient temperatures of 40 degrees Fahrenheit and above, or as approved by the Engineer. The butt fusion shall be accomplished according to the pipe manufacturer's recommendation.

INFORMATIONAL COPY ONLY - NOT FOR BIDDING

7-06.4(3) Concrete Thrust Blocking

Concrete thrust blocking shall be placed at tees and elbows. Blocking shall be commercial concrete meeting the requirements of Section 6-02.3(2)B poured in place.

Concrete thrust blocking shall bear against solid undisturbed earth at the sides and bottom of the trench excavation and shall be shaped so as not to obstruct access to joints of the pipe or fittings.

7-06.4(4) Low Pressure Air Test

The Contractor shall test the existing and new water line, and discharge pipe with a low-pressure air test prior to commencing normal service on this project. The Contractor shall provide all required temporary plugs, flanges and blind flanges, and all test equipment. The Engineer shall be present to inspect, observe and accept test. The Contractor shall notify the Engineer at least 48 hours in advance of any planned test. The Engineer may at any time require calibration test of gauges or other instrumentation that is incorporated in the test equipment.

The limits of the testing for all valves, if any, in the closed position on the County's existing valve near the well house.

Testing shall be the same for the segment of the system or the entire system. The gauge used for the testing shall be certified accurate, marked in one tenth pound per square inch increments.

Procedures for a low-pressure air test:

1. Interior of the pipe shall be clean and free of foreign materials and water prior to the test.
2. Plug all pipe outlets with suitable plugs. Brace each plug securely. Segments to be tested can be isolated using the nearest valve or by temporarily installing plugs or blind flanges. If valves are not suitable for testing, temporarily plugs or blind flanges are required.
3. Add air slowly to the portion of the installation under test until the internal pipe pressure is raised to 4.0 psig.
4. Check exposed pipe and plugs for abnormal leakage by coating with a soap solution. If any failures are observed, bleed off air and make necessary repairs. Restart the test.
5. After the appropriate internal pressure is obtained, allow at least five minutes for air temperatures to stabilize, adding only the amount of air required to maintain test pressure.
6. After a 10 minute stabilization period, disconnect air supply.
7. Start stop watch. The required test period is 60 minutes (one hour) and there is no allowable internal pressure change.

INFORMATIONAL COPY ONLY - NOT FOR BIDDING

7-06.5 Measurement

The length of discharge system piping shall be the number of linear feet of completed installation measured along the invert as shown on the Drawings and includes the length through end caps and electro-fusion couplings. No measurement for the Owner supplied leak detection pipe.

7-06.6 Payment

Payment shall be as follows:

1. "Leak Detection Pipe," per linear foot.The unit contract price per linear foot shall be full compensation for installing the Owner-Supplied, HDPE pipe and fittings such as an end cap, bollards, and materials, labor, excavation, gravel sump material, crush surfacing sideslope bedding backfill, and equipment necessary to install the pipe and fittings, as shown on the Drawings.

2. "2-inch HDPE Solid Wall Waterline," "1-inch HDPE Solid Wall Discharge Pipe," and "4-inch HDPE Connection and Vent Pipe," per linear feet.
   The unit contract price per linear foot shall be full compensation for furnishing and installing solid wall HDPE pipe and fittings such as a valve, PVC/HDPE transition or concrete/HDPE transition fitting, and materials, labor, excavation, bedding, air testing, concrete trust blocks, backfill, pipe supports, drain rock, and equipment necessary to furnish and install the pipe and fittings, as shown on the Drawings.

END OF DIVISION 7

INFORMATIONAL COPY ONLY - NOT FOR BIDDING

DIVISION 8 MISCELLANEOUS CONSTRUCTION

Add the following new section:

(******)

8-05 GEOSYNTHETICS

8-05.1 Description

This work consists of installing the geosynthetics for the evaporation pond, the cap geomembrane liner extension around the evaporation pond, and the pretreatment building gas barrier and vent system as shown on the Drawings.

The geosynthetics for the evaporation pond to be installed are a bottom 60 mil HDPE geomembrane (leak detection layer), a primary 60-mil HDPE geomembrane (primary layer), a geocomposite layer, and geonet, as shown on the Drawings. This work also includes installation of anchor trenches, sumps, and such other work necessary to install the geosynthetics.

The geosynthetics for the cap geomembrane liner around the pond and for the pretreatment building gas barrier geomembrane to be installed are a PVC geomembrane, geocomposite layer, and assess road geotextile cushion layer, as shown on the Drawings. This work also includes installation of anchor trenches, and such other work necessary to install the geosynthetics.

All work shall be in strict accordance with the Specifications, as shown on the Drawings, and as directed by the Engineer.

8-05.2 Materials

Materials shall be new and manufactured for this project and shall meet the requirements of the following sections:

Geomembrane: 30-mil PVC	9-36.1
Geomembrane: 60-mil Textured HDPE	9-36.2
Geocomposite	9-36.3
Geotextile	9-36.4
Geonet	9-36.5

8-05.3 Testing

Testing shall meet the requirements of the following Sections:

Geomembrane Testing Laboratory	8-05.5(5)
PVC Geomembrane Testing	8-05.5(1)A
HDPE Geomembrane Testing	8-05.5(1)B
Geomembrane Testing	8-05.5(3)
Geomembrane Field Testing	8-05.5(4)

INFORMATIONAL COPY ONLY - NOT FOR BIDDING

8-05.4 Qualifications

8-05.4(1) Manufacturers

The Contractor shall provide new geosynthetics manufactured for this project by manufacturers with the following minimum qualifications:

1. The geomembrane manufacturer shall have at least five continuous years' experience in the manufacture of polyvinyl chloride (PVC) geomembranes, and shall have manufactured a minimum of 25 million square feet of PVC geomembrane prior to producing materials for this project.
2. The geomembrane manufacturer shall have at least five continuous years' experience in the manufacture of high-density polyethylene (HDPE) textured geomembrane, and shall have manufactured a minimum of 25 million square feet of HDPE geomembrane prior to producing materials for this project.
3. The geonet and geocomposite manufacturer shall have at least five continuous years' experience in the manufacture of geonet and geocomposite, and shall have manufactured a minimum of 25 million square feet of geonet and geocomposite prior to producing materials for this project.
4. The geotextile manufacturer shall have at least five continuous years' experience in the manufacture of geotextile, and shall have manufactured a minimum of 25 million square feet of geotextile prior to producing materials for this project.

8-05.4(2) Installers

The Contractor shall provide for geosynthetics installation by installers with the following minimum qualifications:

1. The geomembrane installer's personnel shall have successfully installed at least 25 million square feet of PVC and HDPE textured geomembranes prior to installing geomembrane for this project. Submit a list of at least 10 completed projects, which were completed in the last 5 years by the installer of similar size and complexity for review by the Engineer. For each installation, provide name, type, location of facility, facility contact and phone number, date of installation, description, type, and quantity of geosynthetic materials installed. The installer's quality control program shall be submitted.
2. The supervisor for the geomembrane installer (Master Seamer) shall have supervised the installation of at least 25 million square feet of PVC and HDPE geomembranes, which have been incorporated into environmental barrier layers, prior to installing geomembrane for this project.
3. A QC Tester shall be assigned to collect and test all samples. The QC Tester shall not be the Master Seamer. The QC Tester shall meet the same qualifications as the Master Seamer with the experience requirement reduced to 5 million square feet.
4. The geonet and geocomposite layers shall be installed by the geosynthetic installer under the direction of the Master Seamer.

INFORMATIONAL COPY ONLY - NOT FOR BIDDING

8-05.4(3) Meetings

Prior to and during construction of the geosynthetic materials, construction meetings will be held. The meetings shall be attended by the Owner, CQA Engineer, Contractor, and geosynthetic installer.

Topics for the meetings shall include the following:

1. Responsibilities of each party.
2. Lines of authority and communication. Resolution of any project document ambiguity.
3. Methods for documenting, reporting, and distributing documents and reports.
4. Procedures for packaging and storing archive geomembrane samples.
5. Review of time schedule for all installation and testing.
6. Review of panel layout and numbering systems for panels and seams including details for marking on geomembrane.
7. Procedures and responsibilities for preparation and submission of as-built panel and seam drawings.
8. Temperature and weather limitations. Installation procedures for adverse weather conditions. Defining acceptable subgrade preparation, and bedding layer placement, or ambient moisture and temperature conditions for working during installation.
9. Subgrade conditions, dewatering responsibilities, and subgrade maintenance program.
10. Deployment techniques including allowable subgrade for the geosynthetics.
11. Plan for controlling expansion/contraction and wrinkling of the geosynthetics.
12. Covering of the geosynthetics and cover soil placement.
13. Surveying of the geosynthetic limits and geomembrane panels panel numbers, and seams.

8-05.5 Submittals

The Contractor shall submit the information specified in the following subsections in accordance with Sections 8-30.4(1) 8-30.4(2), and 8-30.5 within 10 days after the Notice to Proceed is received, unless otherwise specified. The conformance samples shall be obtained as described in ASTM D4354 and ASTM D4759. All submittals in this subsection are for Engineer Approval.

8-05.5(1) Geosynthetics

8-05.5(1)A PVC Geomembrane

Manufacturer's certified raw material and sheet material data sheets along with a copy of quality control certificates. Testing results not meeting the requirements in Section 9-36 will result in rejection of the applicable rolls. Certified test results shall be provided seven (7) days prior to delivery to the site.

1. Qualifications statement of manufacturer.
2. Qualifications statement of installer.

INFORMATIONAL COPY ONLY - NOT FOR BIDDING

3. Resume of installation supervisor.
4. Manufacturer and installer warranty meeting the requirements of Section 8-30.4(2).
5. Samples and product descriptions for geomembrane, penetrations, and associated appurtenances.
6. A material properties sheet, including at a minimum all properties specified in ASTM D7176 Standard Specification for Non-Reinforced Polyvinyl Chloride (PVC) Geomembrane and ASTM D35, and FGI Fabricated Geom Institute specification, including test methods used.
7. Quality control certificates issued by the resin supplier, quality control certificates for each roll produced, certification that geomembrane and extrudate produced for this project have the same material properties, seven days prior to material delivered to the site.
8. Manufacture and installation procedures and quality control program, including a plan for protecting the work, and for repairing and replacing damaged work.
9. Proposed installation panel layout identifying panels, seams and anticipated sequence.
10. Details, methods, and materials for making field joints; constructing and installing boots around penetrations; and making geomembrane repairs. A shop drawing shall be submitted for shop fabricated geomembrane boots.
11. Record drawings (as-builts) of the panel layout, prior to final payment.
12. Field tensiometer certification.
13. One (1) 12-inch by 12-inch minimum geomembrane sample.

PVC Geomembrane Conformance Testing
Laboratory testing conducted on the geomembrane prior to shipment to the site. Samples from the same material, which will be delivered to the site, shall be tested at a frequency of one test for every 10,000 square feet. Samples from the PVC geomembrane shall be sampled by a certified testing lab before materials are shipped to the site, and shall be tested for tensile properties of strength, thickness, tear, elongation and Modulus at 100 percent by ASTM D7176: Methods 13.1, 13.2, and 13.3, shear and peel by ASTM D6392 as indicated in the CQA Plan Section 3.5.4.

The CQA Engineer may elect to collect samples at the manufacturers or fabrication facility for testing. The Contractor shall inform the CQA Engineer a minimum of seven (7) days prior to fabrication of the PVC geomembrane into panels by the fabricator. Any geomembrane sample and the lot of material it represents, that fails the above testing shall be removed from the site and replaced with geomembrane material that meets specification.

PVC Manufacturing, Sampling, and Testing
Resin Materials. Resin shall be tested in accordance with the approved geomembrane manufacturer's quality control manual. Any resin which fails to meet the geomembrane manufacturer's specified physical properties shall not be accepted for manufacturing the sheet.

INFORMATIONAL COPY ONLY - NOT FOR BIDDING

PVC Geomembrane Sample. One (1) 12-inch by 36-inch minimum size geomembrane sample, along with appropriate identification, shall be provided for quality assurance testing and permanent record of actual furnished material. Samples not meeting the minimum requirements specified shall result in the rejection of the applicable sheets.

PVC Fabrication, Sampling, and Testing

General. Prior to or during factory seaming, roll goods shall be visually inspected on both sides for defects and impurities. Defects and impurities shall be removed and repaired prior to completion of the fabrication process. Thickness measurements shall be made at the center and each edge of the beginning and end of each roll of material in accordance with ASTM D7176, Method 13.1. Rolls having a thickness less than the value specified herein shall be rejected.

Non-Destructive Factory Seam Testing. Non-destructive seam testing shall be conducted in accordance with the fabricator's approved quality control manual. Continuous visual inspection and non-destructive testing shall be performed on both sides of the seams during fabrication. Defective seams shall be repaired, retested and approved prior to continuation of the seaming process.

PVC Geomembrane Field Testing. Laboratory testing shall be conducted on completed field seams and the geomembrane material. Samples, at the end of each shift, shall be sent by overnight mail by the Contractor to the installer's laboratory and tested for the parameters listed in the CQA Plan Section 3.2.3.

8-05.5(1)B HDPE Geomembranes

Manufacturer's certified raw material and sheet material data sheets along with a copy of quality control certificates. Testing results not meeting the requirements in Section 9-36 will result in rejection of the applicable rolls. Certified test results shall be provided seven (7) days prior to delivery to the site.

1. Qualifications statement of manufacturer.
2. Qualifications statement of installer.
3. Resume of installation supervisor.
4. Manufacturer and installer warranty meeting the requirements of Section 8-30.4(2).
5. Samples and product descriptions for geomembrane, penetrations, and associated appurtenances.
6. A material properties sheet, including at a minimum all properties specified in GRI GM 13, including test methods used.
7. Quality control certificates issued by the resin supplier, quality control certificates for each roll produced, certification that geomembrane and extrudate produced for this project have the same material properties.
8. Manufacture and installation procedures and quality control program, including a plan for protecting the work and for repairing and replacing damaged work.
9. Proposed installation panel layout identifying panels, seams and anticipated sequence.

INFORMATIONAL COPY ONLY - NOT FOR BIDDING

10. Details, methods, and materials for making field joints; constructing and installing boots around penetrations; and making geomembrane repairs. A shop drawing shall be submitted for shop fabricated geomembrane boots.
11. Record drawings (as-builts) of the panel layout, prior to final payment.
12. Field tensiometer certification.
13. One (1) 12 inch by 12 inch minimum geomembrane sample.
14. Depth Marker Layout.

HDPE Geomembrane Conformance Testing. Laboratory testing conducted on the geomembrane prior to shipment to the site. Samples from the same material, which will be delivered to the site, shall be tested at a frequency of one test for every 5,000 square yards. Samples shall be tested for the parameters listed below at the frequencies given:

Parameter	Frequency	Test Method
Thickness	Every 5,000 sy	ASTM D5994
Carbon Black Dispersion	Every 5,000 sy	ASTM D5596 Microtome

Any geomembrane sample, and the lot of material it represents, that fails any testing shall be removed from the site and replaced with geomembrane material that meets specification. HDPE textured geomembrane shall have a smooth edge with no texturing in the seaming area on the side of the roll panels.

HDPE Geomembrane Field Testing. The Contractor shall submit the results of geomembrane seam testing as required in this Section within 24 hours of the sample being sent to the laboratory.

Laboratory testing shall be conducted on completed field seams and the geomembrane material. Samples shall be sent by overnight mail to the installer's laboratory and tested for the parameters listed below at the frequencies given.

Parameter	Frequency	Test Method
Shear	Every destructive test	ASTM D6392
Peel	Every destructive test	ASTM D6392

Interface Friction Angle Testing. Interface friction angle test is not required for this project.

8 05.5(1)C Geocomposite Drainage Layer

1. Qualifications statement of manufacturer/fabricator.
2. Samples and product descriptions.
3. Manufacturer's and fabricator's certification that product meets project specifications.
4. Installation procedures including a plan for protecting work, and for repairing or replacing damaged work.
5. Proposed installation layout.

INFORMATIONAL COPY ONLY - NOT FOR BIDDING

8-05.5(1)D Geonet and Geotextile

1. Qualifications statement of manufacturer.
2. Samples and product description.
3. Manufacturer's certification that material meets project specifications.
4. Installation procedures including a plan for protecting work, and for repairing or replacing damaged work.

8-05.5(2) Quality Control Reports

The geosynthetic installer shall submit, on a daily basis, the following reports. The geosynthetic installer will not be allowed to begin work until the previous day's reports are submitted to the Engineer.

1. Daily progress reports including the following:

    a. Project name
    b. Date
    c. Weather conditions, including range of wind speed and temperature, cloud cover, and precipitation
    d. Panels installed
    e. Panels seamed
    f. Field Observations

2. Daily quality control records detailing the initial weld qualification of equipment and welding crews and destructive seam testing results, including, but not limited to, the following:

    a. Project name
    b. Date
    c. Weld crew/machine identification
    d. Qualification results
    e. Destructive test results
    f. General observations

3. Subsurface Certification: The installer shall supply written certification that the surface on which the geosynthetic material will be installed is acceptable. After the underlying layers/materials has been accepted, it shall be the installer's responsibility to indicate to the Contractor and the Engineer any change to its condition due to natural causes or any other occurrences that may require repair work.

8-05.5(3) Geomembrane Testing

The Contractor shall submit the results of their PVC and HDPE geomembrane testing required in 8-30.3 and CQA Plan Section 3.2.3 prior to delivery of the geomembrane to the site. The testing shall be on material taken from representative samples of the rolls to be delivered.

INFORMATIONAL COPY ONLY - NOT FOR BIDDING

8-05.5(4) Geomembrane Field Testing

The Contractor shall submit the results of PVC and HDPE geomembrane seam testing as required in Section 8-30.3 within 24 hours of the sample being sent to the laboratory.

8-05.5(5) Geosynthetic Testing Laboratory

The Contractor shall submit accreditation from an independent third party laboratory selected for the geosynthetic testing. The laboratory shall be GAI Accreditation certified. The Engineer shall make a determination of the acceptability of the selected laboratory within three working days of the submittal.

8-05.6 Construction Requirements

No layer of geosynthetic shall be covered until the geosynthetic installer and the Engineer have inspected and the Engineer has written approval from the geosynthetic installer of the installation.

No vehicular traffic shall travel on the geosynthetics other than approved low ground pressure All Terrain Vehicles (ATVs), or equivalent.

8-05.6(1) PVC Geomembrane

8-05.6(1)A Packaging, Labeling, Shipping, Storage and Handling

Each panel of geomembrane shall be uniquely marked by the manufacturer identifying the panel number and date of manufacture. Labels on each panel shall identify the material, roll number, thickness of the material, the length and width of the panel, and manufacturer.

When folding the fabricated PVC geomembrane panels, the fabricator shall take care not to damage the PVC geomembrane. Any mechanical or other damage shall be repaired to the satisfaction of the CQA Engineer or the material shall be removed from the project and replaced with undamaged PVC geomembrane material.

The geomembrane panels shall be stored elevated on a smooth, flat, non-abrasive surface, and stacked no more than two high. The Contractor shall protect the geomembrane panels at all times from dirt, grease, moisture, heat, and any cause of damage. The Contractor shall replace geomembrane damaged by any means at the Contractor's expense, including wind damage at any time.

8-05.6(1)B Installation

Installation shall be performed under the constant direction of a single Master Seamer who shall remain on-site at all times during the installation and be in responsible charge for all geomembrane installation, including panel layout, seaming, patching, testing, and all other activities associated with the installation.

The bedding layer under the geomembrane shall be in accordance with Section 2-03.3(14)N.

INFORMATIONAL COPY ONLY - NOT FOR BIDDING

Geomembrane shall be deployed and field-seamed only when the geomembrane is dry and wind is minimal. In marginal conditions, seaming shall cease unless tests confirm that satisfactory seam strengths are being obtained. The Contractor shall protect the geomembrane from weather and replace any geomembrane damaged by weather.

Prior to placing geomembrane over sections of the bedding layer, the Master Seamer shall certify in writing that the receiving surface is acceptable. It shall be the responsibility of the Contractor to prepare and keep the receiving surfaces in acceptable condition until complete installation of the geomembrane is accomplished.

All bedding layer damage by construction equipment or personnel, and deemed unsuitable for geomembrane deployment and placement shall be repaired prior to placement. All bedding layer repairs shall be approved by the installer's Master Seamer. This damage and repair shall be the responsibility of the Contractor.

The Contractor shall excavate and backfill the anchor trenches for the geosynthetics as shown on the Drawings. Any damage caused by the Contractor during excavation shall be repaired by the Contractor at no cost to the Owner.

Geomembrane deployment shall proceed when liner temperatures are between 32 degrees F to 104 degrees F as measured by an infrared thermometer or thermocouple. Contractor shall have one operating temperature device on-site during the deployment and installation of the geomembrane and shall document the temperature every two hours. Placement can proceed below 32 degrees F or above 104 degrees F only after it has been verified by the Engineer that the material can be seamed according to the Specification. Geomembrane placement or seaming shall not be done during any precipitation, in the presence of excessive moisture (e.g., fog, rain, dew), during dusty periods or in the presence of excessive winds.

The geomembrane shall be placed with minimum handling. The procedures and equipment used shall not damage the geomembrane. Geomembrane damaged during installation shall be removed or repaired, at the Engineer's discretion and as specified in paragraph 8-05.6(1)D Repairs, at no additional cost to the Owner. Only those panels/sheets that can be anchored and seamed together the same day shall be deployed. Adequate ballast (i.e., sand bags) shall be placed on the geomembrane to prevent uplift by wind without damaging the geomembrane. The method used to unfold the panels/sheets shall not scratch, crimp or excessively elongate the geomembrane and shall not detrimentally rut the subgrade soil as determined by the Engineer. Factory and field seams shall be oriented parallel to the line of maximum slope. Where seams can only be oriented across the slope, the upper panel shall be lapped over the lower panel.

The method used to place the panel/sheets shall minimize wrinkles; however, the geomembrane manufacturer and installer shall coordinate efforts to provide the proper amount of slack in the deployed geomembrane so as to compensate for expansion/contraction due to local temperature extremes. The Contractor shall not cover

INFORMATIONAL COPY ONLY - NOT FOR BIDDING

over wrinkles that could fold over and over areas where taut geomembranes spans ditches and other depressions.

As geomembrane materials are unfolded, the Contractor shall perform further visual inspection of the geomembrane surface. If damage or faults not previously observed are discovered, they shall be clearly marked and repaired. All rips, tears, puncture, or other injuries to the geomembrane shall be repaired as required in Section 8-05(1)D.

PVC Field Seams

General Requirements:
All panels/sheets shall be overlapped a minimum of 3 inches. In corners and odd-shaped geometric locations, the number of field seams shall be minimized. Seaming shall extend to the outside edge of panels/sheets to be placed in anchor and/or drainage trenches. Seaming shall not be conducted in the presence of standing water and/or soft subgrades as determined by the Engineer. Wet surfaces shall be thoroughly dried and soft subgrades compacted and approved by the installer and Engineer prior to seaming. The seam area shall be cleaned of all dust, dirt and foreign material prior to and during seaming.

PVC Seams:
PVC geomembranes shall be seamed by hot wedge fusion methods as recommended by the geomembrane manufacturer. For some applications, chemical fusion methods may be allowed. Seaming solvents or chemical cleaning agents shall be stored away from the panels/sheets and only spill-resistant containers shall be used while working on the geomembrane. If low temperatures slow the curing process of chemically fused seams and delay seam testing, a small portable field oven with constant temperature control shall be used in accordance with GRI GM 7 to accelerate sample curing.

For PVC geomembranes, field seam strengths for hot wedge fusion method shall meet the requirements as stated in the Table of Section 9-36.2(2). The installer shall use the settings that give the best overall seam strengths.

Where seams overlap, the installer is allowed to seal the resulting seam area with a bodied solvent. Patching of seam overlaps will only be necessary, if required by the Engineer.

PVC Geomembrane Backfilling
No geomembrane shall be covered until all inspections, field tests, repairs, and the geomembrane survey are satisfactorily completed. Where the installer's or Engineer's laboratory tests indicate a failure for a destructive test, the seam shall be repaired as required in Section 8-05(1)D.
The geomembrane installer shall prepare record drawings of the completed geomembrane panel layout. The record drawings will detail and show dimensions and location of each panel, geomembrane penetration, destructive test location, and repairs. The record drawings will also include any changes to the geomembrane details on the Drawings.

INFORMATIONAL COPY ONLY - NOT FOR BIDDING

The geomembrane shall be covered in accordance with Section 2-03.3(14)O and with the required materials within five (5) days of acceptance. Folding over of geomembrane wrinkles will not be allowed prior to or during placement of the embankment and liner cover soil layer materials.

8-05.6(1)C Quality Control Testing

Quality control testing of the geomembrane seams shall be performed by the installer and shall include qualification test seams, non-destructive seam testing, and destructive seam testing. The installer shall have on-site a certified tensiometer to test seam samples in peel and shear. All samples shall be cut with a die cutter.

Qualification Test Seams

Field test seams shall be conducted on the geomembrane to verify that seaming conditions are satisfactory. Test seams shall be conducted for each crew at the beginning of each seaming period, at the Engineer's discretion, and at least once each 4 hours, or 40 minutes if idle, for each seaming apparatus used.

All test seams shall be made at a location in the area of the anticipated seaming and in contact with the subgrade. The test seam samples shall be as long as necessary for the wedge weld to go through one temperature cycle for hot shoe welding and for extrusion welding with the seam centered lengthwise. Specimens 1-inch wide shall be cut from each end and the middle (lowest temperature of welder) of the test seam with a die cutter at locations identified by the Engineer. The installer shall supply and use the on-site certified tensiometer to test these specimens for shear and peel. If a test specimen fails to meet field seam specifications, the seaming apparatus and seamer shall not be accepted and shall not be used for seaming until the deficiencies are corrected and two consecutive successful full test seams are achieved.

Non-Destructive Seam Testing

Field seams shall be non-destructively tested over their full length in accordance with the installer's approved quality control manual. Seam testing shall be performed as the seaming work progresses, not at the completion of field seaming. Any seams which fail shall be documented and repaired in accordance with Section 8-05(1)D.

<u>Welding:</u>

The following procedures shall apply to locations where seams are hot wedge and solvent welded:

1. Air lance test continuously the entire seam.
2. The air lance shall be capable of supplying 50 psi through a 3/16-inch-diameter nozzle.
3. The air stream is directed at the upper edge of the seam no more than two inches from the seam edge.
4. Any voids in the seam will be marked, repaired, and retested with the air lance.
5. Each repair will be given a unique identification, technician who did repair, date and time of repair, and date and time of retest and technician who conducted test.

INFORMATIONAL COPY ONLY - NOT FOR BIDDING

Destructive Seam Testing

The installer shall provide the Engineer with a minimum of one destructive test sample per 500 feet of seam length from a location specified by the Engineer. The installer shall not be informed in advance of the sample location.

Sample Procedure: In order to obtain test results prior to completion of liner installation, samples shall be cut by the installer as the seaming progresses. Sampling times and locations shall be determined by the Engineer. The Engineer must witness the obtainment of all test samples and the installer shall mark all samples with the date, time, location, panels, and seam number. The information must be on each sample portion. All holes in the geomembrane resulting from obtaining the seam samples shall be repaired. All patches shall be vacuum tested.

Size and Disposition of Samples: The samples shall be 12 inches wide by 36 inches long and the seam centered lengthwise. The sample shall be cut into three equal length pieces, with one piece given to the Engineer, and two pieces retained by the installer for destructive testing on-site and an offsite lab.

Testing: The installer shall cut ten 1 inch wide replicate specimens from his sample. The installer shall test five specimens for shear strength and five for peel strength in accordance with ASTM D6392. The installer shall have the required certified equipment on-site in order to perform the above mentioned tests. To be acceptable, all ten replicate test specimens must meet the seam requirements specified in Section 9-36. Results of all field testing shall be supplied to the Engineer, in written form, at the end of each working day. The Engineer may test the samples at an independent geosynthetics laboratory.

Procedures for Destructive Test Failure: The following procedures shall apply whenever a sample fails a test:

1. The installer shall reconstruct the seam between the failed location and any passed test location.
2. The installer can retrace the welding path to an intermediate location (at a minimum of 10 feet from the location of the failed test), at the Engineer's discretion, and take a sample for an additional destructive test. If this test passes, then the seam shall be reconstructed between that location and the original failed location. This procedure shall be performed on both sides of the failed test location. If the test fails, then the process is repeated.
3. Over the length of seam failure, the installer shall either cut out the old seam, reposition the panel and reseam or add a cap strip.
4. After reseaming or placement of the cap strip, full non-destructive testing shall be completed. Also, additional destructive field test(s) may be taken within the reseamed area. If test results are not acceptable, this process shall be repeated until the reseamed length is judged satisfactory by the Engineer.

INFORMATIONAL COPY ONLY - NOT FOR BIDDING

In the event that a sample, including a sample supplied to the Engineer and tested at an independent geosynthetics laboratory, fails a destructive test, then the above procedures shall be followed, considering the failed test exclusively.

8-05.6(1)D Repairs

All seams and non-seam areas of the geomembrane shall be inspected by the installer and Engineer for defects, holes, blisters, undispersed raw materials, and any sign of damage or contamination by foreign matter. Because light reflected by the geomembrane helps to detect defects, the surface of the geomembrane shall be clean at the time of inspection. The geomembrane surface shall be brushed, blown, or cleaned with a moist cloth by the installer if the amount of dust or mud inhibits inspection. The Engineer shall decide if cleaning of the geomembrane is needed to facilitate inspection.

Evaluation

Each suspect location in seam and non seam areas shall be non-destructively tested as appropriate in the presence of the Engineer. Each location that fails the non-destructive testing shall be marked by the installer and repaired accordingly.

Repair Procedures

Defective seam areas may be overlaid with a strip of new material and seamed (cap stripped). Alternatively, the seaming path shall be retraced to an intermediate location a minimum of 10-feet on each side of the failed seam location. At each location a 12-inch by 12-inch minimum size seam sample shall be taken for two (2) additional shear strength and two (2) additional peel adhesion tests using an approved quantitative field tensiometer. If these tests pass, then the remaining seam sample portion shall be sent to the independent laboratory for two (2) shear strength and two (2) peel adhesion tests in accordance with ASTM D6392. If these laboratory tests pass, then the seam shall be cap stripped between that location and the original failed location. If field or laboratory tests fail, then the process is repeated. After cap stripping, the entire cap stripped seam shall be non-destructively tested. Certified test results on all repaired seams shall be submitted and approved by the Engineer prior to covering the seamed areas.

8-05.6(1)E Standards

The installer shall have and maintain on-site copies of the installers, fabricators and manufacturers quality control manuals. Copies of all ASTM, FGI, and GRI standards that apply to this project for the field installation of the selected geomembrane shall be maintained on-site by the installer. Work shall not begin until the installer shows copies of all the required manuals and standards to the CQA Engineer.

8-05.6(1)F Reporting

The installer shall submit copies of the previous days daily reports, destructive test results, non-destructive test results, trial seam results, material deployed, certification of subgrade acceptance, and defects and repairs to the CQA Engineer prior to beginning work the following day. Any discrepancies shall be brought to the attention of the CQA Engineer. No

INFORMATIONAL COPY ONLY - NOT FOR BIDDING

geomembrane installation shall begin until the CQA Engineer has received and accepted the daily submittal from the installer.

8-05.6(1)G Die Cutter
The installer shall cut samples for field-tensiometer testing with a die cutter.

8-05.6(1)H Penetrations
Geomembrane penetration details shall be as shown on the Drawings and approved in the submittals. All tailored area field seams shall be non-destructively tested. All hardware shall be stainless steel. Sealants shall be as recommended by the manufacturer.

8-05.6(2) HDPE Geomembrane

8-05.6(2)A Packaging, Labeling, Shipping, Storage, and Handling
Each roll of geomembrane shall be uniquely marked by the manufacturer identifying the roll number and date of manufacture. Labels on each roll shall identify the material, roll number, thickness of the material, the length and width of the panel, and manufacturer.

The geomembrane panels shall be stored elevated on a smooth, flat, non-abrasive surface, and stacked no more than two high. The Contractor shall protect the geomembrane rolls at all times from dirt, grease, moisture, heat, and any cause of damage. The Contractor shall replace geomembrane damaged by any means at the Contractor's expense, including wind damage at any time.

8-05.6(2)B Installation
Installation shall be performed under the constant direction of a single Master Seamer who shall remain on site at all times during the installation and be in responsible charge for all geomembrane installation, including panel layout, seaming, patching, testing, and all other activities associated with the installation.

Geomembrane shall be deployed and field-seamed only when the geomembrane is dry and wind is minimal. In marginal conditions, seaming shall cease unless tests confirm that satisfactory seam strengths are being obtained. The Contractor shall protect the geomembrane from weather and replace any geomembrane damaged by weather.

Prior to placing geomembrane over the receiving surface, the Master Seamer shall certify in writing that the receiving surface is acceptable. It shall be the responsibility of the Contractor to prepare and keep the receiving surfaces in acceptable condition until complete installation of the geomembrane is accomplished.

The Contractor shall excavate and backfill the anchor trenches for the geosynthetics as shown on the Drawings. The Contractor shall excavate the existing geomembrane edges for connection. Any damage caused by the Contractor during excavation shall be repaired by the Contractor at no cost to the Owner.

INFORMATIONAL COPY ONLY - NOT FOR BIDDING

Geomembrane deployment shall proceed when liner temperatures are between 32 degrees F to 104 degrees F as measured by an infrared thermometer or thermocouple. Contractor shall have one operating temperature device on site during the deployment and installation of the geomembrane and shall document the temperature every two hours. Placement can proceed below 32 degrees F or above 104 degrees F only after it has been verified by the Engineer that the material can be seamed according to the Specification. Geomembrane placement or seaming shall not be done during any precipitation, in the presence of excessive moisture (e.g., fog, rain, dew), during dusty periods or in the presence of excessive winds.

The geomembrane shall be installed to the limits indicated on the Drawings. The geomembrane shall be placed in such a manner to minimize field seaming. The geomembrane shall be installed such that field seams run longitudinally down slopes steeper than 10 percent. The Contractor shall provide temporary wind anchorage during geomembrane installation. Only geomembrane panels for each day's field seaming shall be spread each day. The ends of geomembrane installed each day shall be buried in an anchor trench or covered with soil.

As geomembrane materials are unrolled, the Contractor shall perform further visual inspection of the geomembrane surface. If damage or faults not previously observed are discovered, they shall be clearly marked and repaired. All rips, tears, puncture, or other injuries to the geomembrane shall be repaired as required in Section 8-05.6(2)D. The Contractor shall note if the texturing is or is not consistent across the sheet and if the texturing is not consistent with the sample submitted for friction angle analysis. Edges of the HDPE rolls will be smooth for welding thus no texturing.

All seams shall be made by extrusion or fusion welding. The completed joints shall have a minimum bonded seam strength in **shear of 120 pounds per inch** and in **peel of 78 pounds per inch** when tested in accordance with ASTM D6392. **The seam shall also fail as a film tear bond.** Incursion shall not exceed 50 percent (50%) of the welded area.

All fusion welded polyethylene seams shall be double wedge welding techniques separated by an air space. The installer shall use only welding apparatus on which proper control of extrudate or wedge temperature, apparatus pressure, welding speed, width of weld, and sheet preheating temperature can be maintained. The seams shall have edges that are at least one half inch wide to allow for testing. The Contractor will verify that the welding apparatus meets these requirements. Fusion field seams shall be made by overlapping adjacent sheets a minimum of 3 inches and forming a double welded seam separated by an air space.

Extrusion welds will be made by overlapping adjacent sheets a minimum of 3 inches and extruding a ribbon of hot fusion joint material no less than 1 inch in width between the overlapped sheets or over the seams between the lapped sheets, as required. Extrusion weld material shall be of the same material as the geomembrane. The surface of the geomembrane liner sheet shall be roughened by an acceptable means before extrudate is placed between overlapping sheet or over the lapped seam. Excessive grinding resulting in

INFORMATIONAL COPY ONLY - NOT FOR BIDDING

grooving of the liner or reducing the liner thickness greater than 10 percent shall not be permitted.

No geomembrane shall be covered until all inspections, field tests, repairs, and the geomembrane survey are satisfactorily completed. Where the installer's or Engineer's laboratory tests indicate a failure for a destructive test, the seam shall be repaired as required in Section 8-05.6(2)D.

The geomembrane installer shall prepare record drawings of the completed geomembrane panel layout. The record drawings will detail and show dimensions and location of each panel, geomembrane penetration, destructive test location, and repairs. The record drawings will also include any changes to the geomembrane details on the Drawings.

8-05.6(2)C Quality Control Testing

Quality control testing of the geomembrane seams shall be performed by the installer and shall include qualification test seams, non-destructive seam testing, and destructive seam testing. The installer shall have on site a certified tensiometer to test seam samples in peel and shear. All samples shall be cut with a die cutter.

Qualification Test Seams. Field test seams shall be conducted on the geomembrane to verify that seaming conditions are satisfactory. Test seams shall be conducted for each crew at the beginning of each seaming period, at the Engineer's discretion, and at least once each 4 hours, or 40 minutes if idle, for each seaming apparatus used.

All test seams shall be made at a location in the area of the anticipated seaming and in contact with the subgrade. The test seam samples shall be as long as necessary for the wedge weld to go through one temperature cycle for hot shoe welding and for extrusion welding with the seam centered lengthwise. Specimens 1 inch wide shall be cut from each end and the middle (lowest temperature of welder) of the test seam with a die cutter at locations identified by the Engineer. The installer shall supply and use the on-site certified tensiometer to test these specimens for shear and peel. If a test specimen fails to meet field seam specifications, the seaming apparatus and seamer shall not be accepted and shall not be used for seaming until the deficiencies are corrected and two consecutive successful full test seams are achieved.

Non-Destructive Seam Testing. The installer shall non-destructively test all field seams with an air channel pressure testing (double fusion seams only), vacuum box or air pressure testing (for double fusion seams only), and/or spark test over their full length in accordance with GRI Test Method GM6 and ASTM D5641.

Air Channel Pressure Test. Air pressure testing for double fusion seams shall be performed in place of vacuum box tests. The following procedures shall be followed by the installer to perform air pressure testing:

1. Seal both ends of the seam to be tested.
2. Insert needle or other approved pressure feed device into the tunnel created by the double wedge fusion weld.

INFORMATIONAL COPY ONLY NOT FOR BIDDING

3. Energize the air pump to a pressure between 30 and 32 psi, close valve, and sustain pressure for approximately 5 minutes.
4. If loss of pressure exceeds 4 psi, or pressure does not stabilize, locate faulty area, repair, and retest.
5. Relieve pressure at end opposite pressure gauge to check for continuity of air channel.
6. Remove needle or other approved pressure feed device and seal holes with an extrusion weld.
7. Results of the pressure testing shall be recorded on the geomembrane at the seam tested with the date tested, times of the test, the name of the technician performing the test, and the results of the test.

Vacuum Box Test. The following procedures shall apply to locations where seams cannot be non-destructively tested by air channel pressure testing or for extrusion welded seams, as determined by the Engineer:

1. Equipment for testing extrusion seams shall be comprised of but not limited to: a vacuum box assembly consisting of a rigid housing, a transparent viewing window, a soft rubber gasket attached to the base, port hole or valve assembly and a vacuum gauge: a vacuum pump assembly equipped with a pressure controller and pipe connections; a rubber pressure/vacuum hose with fittings and connections; a plastic bucket; wide paint brush or mop; and a soapy solution.
2. The vacuum pump shall be charged and the tank pressure adjusted to approximately 5 psig.
3. The installer shall create a leak tight seal between the gasket and geomembrane interface by wetting a strip of geomembrane approximately 12 inches by 48 inches (or length and width of box) with a soapy solution, placing the box over the wetted area, and then compressing the box against the geomembrane. The installer shall then close the bleed valve, open the vacuum valve, and maintain initial pressure of approximately 5 psig for approximately 5 seconds. The geomembrane should be continuously examined through the viewing window for the presence of soap bubbles, indicating a leak. If no bubbles appear after 5 seconds, the area shall be considered leak free. The box shall be depressurized and moved over the next adjoining area with a 6-inch overlap and the process repeated.
4. All areas where soap bubbles appear shall be marked, repaired, and then retested. CQA Engineer shall be notified of all failures.
5. At locations where seams cannot be non-destructively tested, such as pipe penetrations, non-destructive spark testing shall be substituted.
6. All seams that are vacuum tested shall be marked with the date tested, the name of the technician performing the test and the results of the test.

INFORMATIONAL COPY ONLY - NOT FOR BIDDING

Spark Test. The following procedures shall apply to locations where both air pressure testing and vacuum testing are not possible such as pipe penetrations, as determined by the Engineer:

1. Equipment for spark testing shall be comprised of; but not limited to, a hand held holiday spark tester and conductive wand that generates a high voltage.
2. The testing activities shall be performed by the installer by placing an electrically conductive tape or wire beneath the seam prior to welding. A trial seam containing a non weld segment shall be subject to a calibration test to ensure that such a defect (non welded segment) will be identified under the planned machine settings and procedures. Upon completion of the weld, enable the spark tester and hold one-inch above the weld moving slowly over the entire length of the weld in accordance with ASTM 6365. If there is no spark the area is considered to be leak free.
3. A spark indicates a hole in the seam. The faulty area shall be located, repaired and retested by the installer.

Destructive Seam Testing. The installer shall provide the Engineer with a minimum of one destructive test sample per 500 feet of seam length from a location specified by the Engineer. The installer shall not be informed in advance of the sample location.

Sample Procedure. In order to obtain test results prior to completion of liner installation, samples shall be cut by the installer as the seaming progresses. Sampling times and locations shall be determined by the Engineer. The Engineer must witness the obtainment of all test samples and the installer shall mark all samples with the date, time, location, panels, and seam number. The information must be on each sample portion. All holes in the geomembrane resulting from obtaining the seam samples shall be repaired. All patches shall be vacuum tested.

Size and Disposition of Samples. The samples shall be 12 inches wide by 36 inches long and the seam centered lengthwise. The sample shall be cut into three equal length pieces, with two pieces given to the Engineer, and one piece retained by the installer for destructive testing on site.

Testing. The installer shall cut ten 1 inch wide replicate specimens from his sample. The installer shall test five specimens for shear strength and five for peel strength in accordance with ASTM D6392. The installer shall have the required certified equipment on-site in order to perform the above mentioned tests. To be acceptable, all ten replicate test specimens must meet the seam requirements specified in Section 8-05.6(2)B. Results of all field testing shall be supplied to the Engineer, in written form, at the end of each working day. The Engineer may test the samples at an independent geosynthetics laboratory.

INFORMATIONAL COPY ONLY - NOT FOR BIDDING

Procedures for Destructive Test Failure. The following procedures shall apply whenever a sample fails a test:

1. The installer shall reconstruct the seam between the failed location and any passed test location.
2. The installer can retrace the welding path to an intermediate location (at a minimum of 10 feet from the location of the failed test), at the Engineer's discretion, and take a sample for an additional destructive test. If this test passes, then the seam shall be reconstructed between that location and the original failed location. This procedure shall be performed on both sides of the failed test location. If the test fails, then the process is repeated.
3. Over the length of seam failure, the installer shall either cut out the old seam, reposition the panel and reseam or add a cap strip.
4. After reseaming or placement of the cap strip, full non-destructive testing shall be completed. Also, additional destructive field test(s) may be taken within the reseamed area. If test results are not acceptable, this process shall be repeated until the reseamed length is judged satisfactory by the Engineer.

In the event that a sample, including a sample supplied to the Engineer and tested at an independent geosynthetics laboratory, fails a destructive test, then the above procedures shall be followed, considering the failed test exclusively.

8-05.6(2)D HDPE Geomembrane Repairs

All seams and non-seam areas of the geomembrane shall be inspected by the installer and Engineer for defects, holes, blisters, undispersed raw materials, and any sign of damage or contamination by foreign matter. Because light reflected by the geomembrane helps to detect defects, the surface of the geomembrane shall be clean at the time of inspection. The geomembrane surface shall be brushed, blown, or cleaned with a moist cloth by the installer if the amount of dust or mud inhibits inspection. The Engineer shall decide if cleaning of the geomembrane is needed to facilitate inspection.

Evaluation. Each suspect location in seam and non-seam areas shall be non-destructively tested as appropriate in the presence of the Engineer. Each location that fails the non-destructive testing shall be marked by the installer and repaired accordingly.

Repair Procedures. The repair of the geomembrane should be as follows:

1. Defective seams shall have the old seam cut out, reposition the panel, and reseam or add a cap as described in these Specifications. Rewelding over failed seams shall not be allowed.
2. Small holes in polyethylene shall be repaired by extrusion cap welding. If the hole is larger than 1/4-inch, it shall be patched.
3. Tears shall be repaired by patching. The tear must be rounded prior to patching.
4. Blisters, large holes, undispersed raw materials, and contamination by foreign matter shall be repaired by patches.

INFORMATIONAL COPY ONLY NOT FOR BIDDING

5. Surfaces of the geomembrane, which are to be patched, shall be abraded and cleaned no more than 15 minutes prior to the repair. No more than 10 percent of the liner's thickness shall be removed.
6. Patches shall be round or oval in shape, made of the same geomembrane, and extend a minimum of 6 inches beyond the edge of defects. All patches shall be of the same compound and thickness as the geomembrane specified. All patches to be extrusion welded shall have their top edge beveled with an angle grinder prior to placement on the geomembrane. Patches shall be applied using approved seaming methods only.
7. Wrinkles, which may become folds during placement of material above the geomembrane, shall be repaired by cutting away the excess material and repairing as required above. No folding in the geomembrane is allowed. No spanning over voids in the subgrade by the geomembrane is allowed.

8-05.6(2)E HDPE Pond Depth Marker

The pond shall be equipped with one depth marker at a location as shown on the Drawings and/or as determined by the Engineer.

The depth marker shall be fastened to the full length of the pond 3H:1V sideslope. The back-drop of the marker shall be 2-foot wide and constructed of white HDPE. The white HDPE shall be full extrusion welded to the pond liner.

Increment levels shall be 4-inch wide HDPE strips welded to the white backing sheet. The increments strips shall be 6-inch on-center. The full foot level strips shall be full width of the white backing sheet while the half-foot shall be half width. All strips shall be aligned on the left side of the white backing sheet.

The foot level text shall be 6 inches in height and shall be position above the full foot level strip and offset approximately 3 inches from the left side of the white backing sheet.

8-05.6(2)F LFG Vents and Pipe Hangers

The pond shall be equipped with LFG vents and pipe hangers at locations determined by the Engineer, and constructed as shown on the Drawings and in accordance with these specifications.

8-05.6(2)G Standards

The installer shall have and maintain on-site copies of the installers, fabricators and manufacturers quality control manuals. Copies of all ASTM and GRI standards that apply to this project for the field installation of the selected geomembrane shall be maintained on-site by the installer. Work shall not begin until the installer shows copies of all the required manuals and standards to the CQA Engineer.

8-05.6(2)H Reporting

The installer shall submit copies of the previous days daily reports, destructive test results, non-destructive test results, trial seam results, material deployed, certification of subgrade

INFORMATIONAL COPY ONLY - NOT FOR BIDDING

acceptance, and defects and repairs to the CQA Engineer prior to beginning work the following day. Any discrepancies shall be brought to the attention of the CQA Engineer. No geomembrane installation shall begin until the CQA Engineer has received and accepted the daily submittal from the installer.

8-05.6(2)I Die Cutter

The installer shall cut samples for field-tensiometer testing with a die cutter.

8-05.6(2)J HDPE Penetrations

HDPE geomembrane penetration details shall be as shown on the Drawings and approved in the submittals. All tailored area field seams shall be non-destructively tested. All hardware shall be stainless steel. Sealants shall be as recommended by the manufacturer.

8-05.6(3) Geocomposite Drainage Layer

8.05.6(3)A Packaging, Labeling, Shipping, Storage, and Handling

Each roll of geocomposite drainage layer shall be uniquely marked by the manufacturer/fabricator identifying the roll number and dates of manufacture/fabrication. Labels on each roll shall identify the material, roll number, the length and width of roll, and the manufacturer and fabricator.

The geocomposite drainage layer rolls shall be stored on a smooth, flat, non-abrasive surface, and stacked no more than three high. The Contractor shall protect the geocomposite drainage layer rolls at all times from dirt, grease, moisture, heat, sunlight, and any cause of damage. The geocomposite drainage layer rolls shall be left in their protective wrapping from the fabricator until deployed. The Contractor shall replace the geocomposite drainage layer damaged by any means at the Contractor's sole expense, including wind damage at any time.

8-05.6(3)B Installation on PVC Geomembrane

The geotextile or geocomposite shall be installed over the geomembrane prior to placement of the overlying layer after acceptance of the geomembrane installation and geosynthetic survey by the installer and the Engineer.

The surface to receive the geotextile or geocomposite shall be free from dust, dirt, stones, and any other objects or debris. The surface shall be free of wrinkles. The geotextile shall be installed as shown on the Drawings. Adjoining sections of geocomposite shall have no less than a 6-inch overlap and shall be heat bonded. Adjoining sections of geonet shall have no more than 1/4-inch gap between the edges of the net structures on each piece and shall be fastened every 5 feet of seam with plastic ties.

The Contractor shall not operate equipment or vehicles of any kind on the geocomposite. Any damaged sections of geocomposite caused by wind, weather, Contractor's activities, or any other means, shall be repaired or replaced at no additional cost to the Owner.

INFORMATIONAL COPY ONLY - NOT FOR BIDDING

The overlying layer shall be placed over the installed sections of geocomposite only after written approval of the geocomposite installation by the installer and the Engineer. The geocomposite overlap shall be secured (heat lanced) to prevent loss of overlap when placing the embankment.

8-05.6(3)C Installation under PVC and HDPE Geomembranes

The geocomposite shall be installed over the approved subgrade prior to placement of the secondary HDPE geomembrane or PVC gas barrier geomembrane after acceptance of the subgrade by the installer and Engineer.

The subgrade (bedding layer) under the geocomposite shall be compacted smooth and free of all rocks, stones, sticks, roots, sharp objects, or debris of any kind. The surface shall provide a firm, unyielding foundation with no sudden, sharp, or abrupt changes or break in grade. There shall be on divots in the bedding layer greater than 1/2 inch. Additional subgrade preparation may be required prior to and during the installation of the geocomposite due to geocomposite installation techniques and activities or nature of subgrade material.

All geocomposite damage by construction equipment or personnel, and deemed unsuitable for overlying geosynthetic deployment and placement shall be repaired prior to placement. All geocomposite repairs shall be approved by the installer's Master Seamer. This damage and repair shall be the responsibility of the Contractor.

The geocomposite shall be installed as shown on the Drawings. Adjoining sections of geotextile shall have no less than a 6 inch overlap and shall be heat bonded. Adjoining sections of geonet shall have no more than 1/4-inch gap between the edges of the net structures on each piece and shall be fastened every 5 feet of seam with plastic ties.

The Contractor shall not operate equipment or vehicles of any kind on the geocomposite. Any damaged sections of geocomposite caused by wind, weather, Contractor's activities, or any other means, shall be repaired or replaced at no additional cost to the Owner. An ATV with low ground pressure may be used with approval of Engineer.

8-05.6(4) Geonet

8-05.6(4)A Packaging, Labeling, Shipping, Storage, and Handling

Each roll of geonet shall be uniquely marked by the manufacturer/fabricator identifying the roll number and dates of manufacture. Labels on each roll shall identify the material, roll number, the length and width of roll, and the manufacturer.

The geonet rolls shall be stored on a smooth, flat, non-abrasive surface, and stacked no more than three high. The Contractor shall protect the geonet rolls at all times from dirt, grease, moisture, heat, sunlight, and any cause of damage. The geonet rolls shall be left in their protective wrapping from the fabricator until deployed. The Contractor shall replace

INFORMATIONAL COPY ONLY. NOT FOR BIDDING

geonet damaged by any means at the Contractor's sole expense, including wind damage at any time.

8-05.6(4)B Installation

The geonet shall be installed over the secondary geomembrane after acceptance of the geomembrane installation by the installer and the Engineer, and geosynthetic survey by the Contractor.

The surface to receive geonet shall be free from dust, dirt, stones, and any other objects or debris. The surface shall be free of wrinkles. The geonet shall be installed as shown on the Drawings. When installed on slopes steeper than 10 percent, longitudinal seams shall run down the slope.

Adjoining sections of geonet shall have no more than 1/4-inch gap between the edges of the net structure on each piece and shall be fastened every 5 feet of seam with plastic ties approved by the geonet manufacturer and the Engineer.

The Contractor shall not operate equipment or vehicles of any kind on the geonet. Any damaged sections of geonet caused by wind, weather, Contractor's activities, or any other means, shall be repaired or replaced at no additional cost to the Owner.

The primary geomembrane shall be placed over the installed sections of geonet only after written approval of the geonet installation by the installer and the Engineer, and acceptance of the geonet survey.

Repairs shall be made by cutting out damaged areas, in rectangular shapes, and replacing with new material. Seaming shall be as required above with a minimum of one tie on each side of the patch.

8-05.6(5) Geotextile Cushion Layer

8-05.6(5)A Packaging, Labeling, Shipping, Storage, and Handling

Each roll of geotextile shall be uniquely marked by the manufacturer/fabricator identifying the roll number and dates of manufacture/fabrication. Labels on each roll shall identify the material, roll number, the length and width of roll, and the manufacturer and fabricator.

The geotextile rolls shall be stored on a smooth, flat, non-abrasive surface, and stacked no more than three high. The Contractor shall protect the geotextile rolls at all times from dirt, grease, moisture, heat, sunlight, and any cause of damage. The geotextile rolls shall be left in their protective wrapping from the fabricator until deployed. The Contractor shall replace geotextile damaged by any means at the Contractor's sole expense, including wind damage at any time.

INFORMATIONAL COPY ONLY - NOT FOR BIDDING

8-05.6(5)B Installation

The geotextile cushion layer shall be installed over the approved subgrade prior to placement of the secondary geomembrane after acceptance of the subgrade by the Installer and Engineer.

The subgrade (bedding layer) under the geotextile shall be compacted smooth and free of all rocks, stones, sticks, roots, sharp objects, or debris of any kind. The surface shall provide a firm, unyielding foundation with no sudden, sharp, or abrupt changes or break in grade. There shall be on divots in the bedding layer greater than 1/2 inch. Additional subgrade preparation may be required prior to and during the installation of the geotextile cushion layer and secondary geomembrane due to geomembrane installation techniques and activities or nature of subgrade material.

All geotextile cushion layer damage by construction equipment or personnel, and deemed unsuitable for overlying geosynthetic deployment and placement shall be repaired prior to placement. All geotextile cushion layer repairs shall be approved by the Installer's master seamer. This damage and repair shall be the responsibility of the Contractor.

The geotextile shall be installed as shown on the Plans. Adjoining sections of geotextile shall have no less than a 6 inch overlap and shall be heat bonded.

The Contractor shall not operate equipment or vehicles of any kind on the geotextile. Any damaged sections of geotextile caused by wind, weather, Contractor's activities, or any other means, shall be repaired or replaced at no additional cost to the Owner.

8-05.7 Warranty

The installer of the PVC and HDPE geomembranes, geonet, and geocomposite materials and associated appurtenances shall warrant the workmanship to be free of defects on a non prorata basis for two (2) years. After acceptance of the work by the Owner, the installer shall provide all warranty work and associated costs required by the Owner at the Contractor's sole expense.

The installer shall also obtain and furnish the Owner a warranty from the geomembrane manufacturers for the materials used. The material warranty for the geomembrane shall be for defects or failure of the material for 10 years after acceptance of the work by the Owner on a prorata basis. All defects or failure of the material shall be repaired at the Contractor's sole expense.

8-05.8 Measurement

1. "60-mil Textured HDPE Geomembrane," "30-mil PVC Geomembrane," "Geonet Layer," "Geotextile Cushion Layer", and "Geocomposite Layer," by the square yard. The material will be measured by horizontal measure over the area that the material was installed within the pay limits of the liner system as shown on the Drawings. No adjustment for slope, embankments or sideslope berms, anchor trenches, or under-laps or overlaps will be made.

INFORMATIONAL COPY ONLY - NOT FOR BIDDING

2. “Geomembrane Penetrations,” per each.
   The unit contract price per each for HDPE and/or PVC penetrations shall be full compensation for all cost for materials, labor, tools, and equipment necessary to furnish and install the penetrations.

   The unit price per each shall include the cost to furnish and install all geomembrane penetrations, bentonite, clamps, chalk, mastic, and other materials associated with the penetrations, as shown on the Drawings.

3. “Depth Marker,” “LFG Vents,” and “Pipe Hangers,” per each.
   The unit contract price per each for depth markers shall be full compensation for all cost for materials, labor, tools, and equipment necessary to furnish and install the depth marker.

8-05.9 Payment

1. “60-mil Textured HDPE Geomembrane,” “30-mil PVC Geomembrane,” “Geonet Layer,” “Geotextile Cushion Layer”, and “Geocomposite Layer,” by the square yard. The unit contract price per square yard shall be full compensation for all labor, equipment, tools, and material needed to furnish and install in place the material, including seaming, conformance and destructive seam field testing, welding, overlaps, flaps, penetrations, reporting, surveying, and repairing as needed in accordance with these Specifications.

   Anchor trenches and geosynthetic testing shall be incidental to the unit prices listed in this section.

2. “Geomembrane Penetrations,” per each.
   The unit contract price per each shall be full compensation for all labor, equipment, tools, and materials needed to furnish and install in place the materials, including seaming, welding, bentonite, stainless steel straps, mastic, chalk, and other materials as needed in accordance with these Specifications.

3. “Depth Marker,” “LFG Vents,” and “Pipe Hangers,” per each.
   The unit contract price per each shall be full compensation for all labor, equipment, tools, and material needed to furnish and install in place the material, including seaming, welding, surveying, and repairing as needed in accordance with these Specifications.

INFORMATIONAL COPY ONLY - NOT FOR BIDDING

8-12 CHAIN LINK FENCE AND WIRE FENCE

8-12.1 Description

Replace Section 8-12.1 with the following:

(******)

This work shall consist of furnishing and constructing chain link fence and the security barbed wire above the fence of the types specified in accordance with these Specifications and the Standard Plans at the locations shown on the Plans.

Chain link fence shall be of diamond woven wire mesh mounted on steel posts.

Wire fence shall be barbed wire with wire mesh fastened to posts. Only steel posts and steel braces may be used.

8-12.2 Materials

Supplement Section 8-12.2 with the following:

(******)

Materials shall meet the requirements of the following sections:

Concrete	6.02
Chain Link Fence and Gates	9-16.1
Grout	9-20.3

8-12.3 Construction Requirements

Replace this section with the following leaving all subsections of this section intact:

(******)

No or minor clearing of the fence line will be required. Chain link fence shall be installed at a maximum post spacing of 10'-0" on-center and to the lines shown on the Plans, and in accordance with the Standard Plans, which are enclosed within this document. The chain link fence shall be installed along the existing range fence along the south and west sides. Contractor should take care during construction and not disturb the existing trees along the west side.

Grading of the fence line sufficient to prevent short and abrupt breaks in the ground contour that will improve the aesthetic appearance of the top of the fencing when installed shall be required. It is expected that in the performance of this work, machine and hand operations will be required for chain link fencing.

The fence shall be constructed close to and inside the property line and/or existing range fence unless otherwise directed by Engineer. Deviations in alignment to miss obstacles will be permitted only when approved by the Engineer. The chain link fence shall be tied directly into the existing fence line along the north side as directed by the Engineer.

INFORMATIONAL COPY ONLY - NOT FOR BIDDING

Barbed wire extension or supporting arms shall be installed away from the landfill. The barbed wire shall be pulled taut to remove all sag. Firmly install in the slots of extension arms, and secure it to a terminal post utilizing terminal post band arms or brace bands or other suitable standard devices.

8-12.3(1) Chain Link Fence and Gates

8-12.3(1)D Chain Link Fabric

Supplement Section 8-12.3(1)D with the following:

(******)

Chain link fabric Type 1 shall be placed on the face of the post away from the landfill.

8-12.4 Measurement

Replace Section 8-12.4 with the following:

(******)

Chain link fence will be measured by the linear foot of completed fence, along the ground line, and include end, corner, line, and pull posts; concrete, and other incidental materials and labor to install the fence.

Gates will be measured by the unit for each type of gate furnished and installed.

8-12.5 Payment

Replace Section 8-12.5 with the following:

(******)

Payment will be made in accordance with Section 1-04.1, and shall include connecting the existing fence to the new chain link fencing for the following bid items:

"Chain Link Fence Type 1", per linear foot.
"Double 16-Foot Chain Link Gate", per each.

END OF DIVISION 8

INFORMATIONAL COPY ONLY - NOT FOR BIDDING

This Page Intentionally Left Blank

INFORMATIONAL COPY ONLY - NOT FOR BIDDING

DIVISION 9 MATERIALS

9-05 DRAINAGE STRUCTURES AND CULVERTS

9-05.21 Steel Rib Reinforced Polyethylene Culvert Pipe

Add the following new subsections:

(******)

9-05.21(1) HDPE Material

High-density polyethylene pipe and fittings shall be made from polyethylene resin compound qualified as Type III, Category 5, Class C, Grade P34 in ASTM D1248. The HDPE pipe and fittings shall conform to Cell Classification 345464C or 355434C (ASTM D3350). Diameter shall be as shown on the Drawings. This material shall have compressive yield strength of 1,600 psi when tested and analyzed by ASTM D695. This material shall have a Tensile Yield Strength of 3,200 psi when tested and analyzed by ASTM D638.

The polyethylene compound shall be suitably protected against degradation by ultraviolet light by means of carbon black, well dispersed by precompounding in a concentration of not less than 2 percent.

The manufacturer shall be listed with the Plastic Pipe Institute as meeting the recipe and mixing requirements of the resin manufacturer for the resin used to manufacture the pipe and fittings for this project.

The HDPE products shall contain no recycled compound except that generated in the manufacturer's own plant from resin of the same specifications from the same raw material supplier.

The Contractor shall submit, at the preconstruction meeting, a description of the pipe to be used which includes materials specifications provided by the manufacturer. The Contractor shall supply the manufacturer's certificate of compliance in accordance with Section 1-06.3 of the Standard Specifications prior to installing any HDPE piping.

9-05.21(2) High Density Polyethylene (HDPE) Pipe

HDPE pipe meeting the requirements of this section shall be used for the leak detection pipe and discharge pipe, and all other piping unless specified or otherwise shown on the Drawings.

The same manufacturer shall supply polyethylene pipe and fittings. Pipe and fittings from different manufacturers shall not be interchanged.

Pipe and fittings shall be of the nominal diameter shown on the Drawings. All pipe sizes, either solid or perforated, shall conform to ASTM F714.

INFORMATIONAL COPY ONLY - NOT FOR BIDDING

The maximum allowable hoop stress shall be 1000 psi at 140 degrees F.

The polyethylene pipe shall be homogeneous throughout and free of visible cracks, holes, foreign inclusions, or their injurious defects. Any pipe with nicks, scrapes, or gouges deeper than 5 percent of the nominal wall thickness shall be rejected. The pipe shall be uniform in color, opacity, density, and other physical properties.

The pretreatment discharge pipe and fitting, unless otherwise designated on the Drawings, shall conform to the following:

1. 2-inch waterline and 1-inch discharge pipe shall have a minimum working pressure of 64 psi at 73.4 degrees F and a minimum SDR of 11 or less.
2. 4-inch vent system shall have a minimum working pressure of 64 psi at 73.4 degrees F and a minimum and a minimum SDR of 17 or less. The collection pipe shall have perforations that are shop fabricated and of basic configuration and dimensions as follows: four (4) ¼-inch diameter holes, offset 90 degrees, every 2 feet on-center of collection pipe.

The evaporation pond leak detection pipe, unless otherwise designated on the Drawings, shall be supplied by the Owner. The supplied HDPE pipe is SDR 17 and is perforated in the last five feet of pipe. Contractor may be required to extend or shorten the pipe length.

The following information shall be continuously marked on the pipe or spaced at intervals not exceeding 5 feet:

1. Name and/or trademark of the pipe manufacturer
2. Nominal pipe size
3. Standard Dimensional Ratio (SDR)
4. PE 3408
5. Manufacturing Standard Reference
6. A production code from which the date and place of manufacture can be determined

Joints and pipe connections shall be thermal butt-fusion or electro-fusion. No mechanical couplings shall be used unless shown on the Drawings or approved by the Engineer.

9-05.21(3) HDPE Fittings

Fittings shall be manufactured in accordance with ASTM D3261, and shall be manufactured by injection molding, a combination of extrusion and machining, or fabrication from HDPE pipe conforming to these Specifications. Fittings shall be from the same manufacturer as the pipe and shall have the same or numerically smaller SDR than pipe connecting to the fitting. Fittings shall be molded, for sizes 6 inch and smaller.

All reducing tees shall be factory-molded if available as a standard item by any manufacturer having pipe and meeting these Specifications. If not available as a standard

INFORMATIONAL COPY ONLY - NOT FOR BIDDING

item, branch saddle reducing tees shall be used. Reducers shall be shop-fabricated. Field fabricated branch saddle connections shall not be allowed.

All molded fittings shall have the same or higher pressure rating as the pipe when installed in accordance with the Specifications. All fabricated fittings shall have the same or higher pressure rating as the adjoining pipe when installed in accordance with the manufacturer's recommendations.

The threaded stainless steel/HDPE transition pipe fittings for connection at the wellheads shall be factory molded and constructed and shall have the same or higher pressure rating as the pipe.

9-05.21(4) Pipe Connections

Joints and pipe connections shall be thermal butt-fusion. No mechanical couplings shall be used unless shown on the Drawings or approved by the Engineer.

Electrofusion couplings shall be used where shown on the Drawings, in situations where welding machine access is difficult or impossible, or as determined by the Engineer.

Electrofusion couplings shall be a rigid straight coupler constructed from injection-molded polyethylene with embedded heating coils. Electro-fusion couplings shall be manufactured in accordance with ASTM F 1055.

9-05.21(5) Flanges

Flanges shall consist of polyethylene flange adapter (ribbed-face) fused to each stubout of pipe, with a 304 stainless steel backup ring (Class 150# ANSI B 16.5) standard dimensions. Flanged connections shall have the same or greater pressure rating as the pipe. Bolts, nuts, and washers shall be 304 stainless steel and shall be assembled with anti-seize compound as recommended by the manufacturer. Blinds shall be 1-thick HDPE. All flanged connections shall be complete with a gasket.

Gaskets shall be flat ring, 1/8 inch Viton.

9-16 FENCE AND GUARDRAIL

9-16.1 Chain Link Fence and Gates

9-16.1(1) General

Section 9-16.1(1) is replaced with the following:

(******)

All material used in the construction of chain link fence and gates shall be new. Iron or steel material shall be galvanized. Galvanizing on all materials shall be Class 1 performed by the hot-dipped process. Material upon which serious abrasions of galvanizing occur shall not be acceptable.

INFORMATIONAL COPY ONLY - NOT FOR BIDDING

Chain Link Fence Type 1, plus 1'-0" of 3 strand barbed wire at top for a total height of 7 feet, shall be of Class 1 materials.

9-16.1(1)A Post Material for Chain Link Fence

Section 9-16.1(1)A is supplemented with the following:

(******)

Round post material shall consist of 2 ½-inch-diameter (nominal trade size O.D. designation) round line pipe posts, and 3-inch-diameter round end posts.

9-16.1(1)B Chain Link Fence Fabric

Section 9-16.1(1)B is supplemented with the following:

(******)

Chain link fabric shall consist of a Type 1, 2-inch diamond mesh 9-guage chain link fabric. Barbed wire supporting arms shall be at an angle of approximately 45 degrees and shall be fitted with clips or other standard means for attaching three strands of barbed wire. Barbed wire shall be accordance with Section 9-16.2(1)E and conform to ASTM A121.

Add the following new section and subsections:

(******)

9-37 GEOSYNTHETICS

The installer shall employ a third party laboratory approved by the Engineer for all testing of geosynthetics listed in this Section. The location of testing and sampling shall be approved by the Engineer prior to the delivery of samples to the laboratory. All test results shall be given directly to the Engineer by the laboratory.

9-37.1 Geomembrane: 30-Mil PVC

The materials supplied under these Specifications shall be new and first quality products designed and manufactured specifically for the purposes of this work and this project, which have been satisfactorily demonstrated by prior use to be suitable and durable for such purposes. When folding the fabricated PVC geomembrane panels, the fabricator shall take care not to damage the PVC geomembrane. Any mechanical or other damage shall be repaired to the satisfaction of the CQA Engineer or the material shall be removed from the project and replaced with undamaged PVC geomembrane material.

Polyvinyl Chloride (PVC geomembranes conforming to the requirements of this Section are acceptable geomembrane materials for this process.

PVC sheeting shall be suitably formulated from a homopolymer vinyl chloride resin of Type GP in accordance with ASTM Specification D1755 to impart durability (ASTM D3083). Use of water soluble compounding ingredients is prohibited. Plasticizers that are resistant to migration, mildew and bacterial degradation shall be used. The sheeting shall be

INFORMATIONAL COPY ONLY - NOT FOR BIDDING

pigmented to produce a uniform color. The sheeting shall be capable of being sealed to itself using heat-sealing, HF welding and solvent welding techniques.

9-37.1(1) Sheet Materials

A sheet is defined as a manufactured seamless geomembrane unit with a width equal to or greater than 5 feet. Geomembrane sheets shall be non-reinforced and uniform in color, thickness and surface texture. For textured sheets, the textured surface features shall consist of polymers identical to that of the base material. The sheets shall also be free of and resistant to fungal or bacterial attack and they shall be free of cuts, abrasions, holes, blisters, contaminants and other imperfections.

Lots less than 80,000 square feet in size will only be allowed if the Contractor pays for the conformance testing of the short lot.

9-37.1(2) Geomembrane Physical Properties

ASTM 7176 specification for 30-mil PVC geomembranes. Sheets and factory seams shall conform to the minimum physical requirements listed in the manufacturer's property specifications or ASTM 7176, whichever is greater. Properties shall be submitted a minimum of 30 days prior to delivery of geomembrane to the site.

Provide all first quality, new materials, free from defects. The PVC geomembrane shall have the following physical properties as determined by test method:

Property [a, b]	**Test Method**	**Specified Values**
Thickness (mils – min avg.)	ASTM D5199	30
Tensile Properties: (min. avg.)		
1. Strength at Break (lb/in)	ASTM D882 (min)[c]	73
2. Elongation (%)		380
3. Modulus @ 100% (lbs/in)		32
Tear Strength (min. avg.) (lbs.)	ASTM D1004[c]	8
Dimensional Stability (% – max change)	ASTM D1204[c]	3
Low Temperature Impact (degrees F – pass)	ASTM D1790[c]	-20
Index Properties [d]:		
Specific Gravity (g/cc)	ASTM D792	1.2
Water Extraction (% – max loss)	ASTM D1239[c]	0.15
Volatility Loss (% – max loss)	ASTM D1203[c]	0.7
Soil Burial (% – max change)		
1. Break Strength	G160[c]	5
2. Elongation		20
3. Modulus @ 100%		20
Hydrostatic Resistance (psi – min)	ASTM D751[c]	100

INFORMATIONAL COPY ONLY - NOT FOR BIDDING

Property [a, b]	Test Method	Specified Values
Seams Strength:		
Shear (lbs/in – min)	ASTM D882[c]	58.4
Peel (lbs/in – min)		15

a ASTM D7408 Specification.
b Certified properties are tested by lot as specified in PGI 1104 Appendix A.
c Modifications or further details of test are described in PGI 1104 Appendix B.
d Index properties are tested once per formulation as specified in PGI 1104 Appendix A.

9-37.1(3) Factory Seams

Geomembrane sheets shall be manufactured as wide as possible to minimize factory and field seams. Manufactured non-polyethylene sheets shall be factory seamed into maximum sized panes so as to minimize field seaming. Panels are factory or field fabricated geomembrane units, which are composed of several geomembrane sheets seamed together. Factory seaming shall be by methods approved by the geomembrane manufacturer. Seams shall meet the minimum shear and peel strength requirements as required by ASTM 7176. Factory seams shall extend to the end of the sheet so that no unbonded edges greater than 1/8-inch wide are present.

Panels/pallets shall be labeled such that it is possible to relate each panel with manufacturing quality control documentation and raw material documentation.

9-37.2 Geomembrane: 60-Mil Textured HDPE

The materials supplied under these Specifications shall be new and first quality products designed and manufactured specifically for the purposes of this work and this project, which have been satisfactorily demonstrated by prior use to be suitable and durable for such purposes. The geomembrane rolls shall be seamless, HDPE (Density 0.94 g/cm) containing no plasticizers fillers or extenders, and shall be free of holes, blisters or contaminants, and leak free verified by 100 percent in line spark or equivalent testing. The geomembrane shall be supplied as a continuous sheet with no factory seams in rolls.

The resultant membranes shall be free from dirt, oil, foreign matter, scratches, cracks, creases, bubbles, pits, tears, holes, pinholes or other defects.

The HDPE lining material shall be manufactured into roll panels to conform to submitted and reviewed fabrication drawings. These drawings shall be submitted in accordance with Sections 1-05.3 and 1-06.1.

Provide all first quality, new materials, free from defects. The new double-sided textured high density polyethylene (HDPE) geomembrane shall be uniformly textured on both sides. The geomembrane shall be manufactured in conformance with GRI GM 13. The HDPE geomembrane shall have smooth edges for welding therefore no texturing is allowed on the

INFORMATIONAL COPY ONLY - NOT FOR BIDDING

edges of the rolls. The HDPE geomembrane shall have the following physical properties as determined by test method:

Property	Test Method	Textured HDPE Value
Thickness (Mils min. avg.) • Lowest individual of 10 values • Lowest individual for 8 of 10 values • Lowest individual for 10 of 10 values	ASTM D5199 for smooth and ASTM D5994 for textured	60 Nom. (-5%) -10% -15%
Asperity Height (min. avg.) (mil)	GM 12	16[a]
Density (g/ml, min. avg.)	ASTM D1505/D 792	.940
Minimum Tensile Properties (each direction) (min. avg.) 1. Tensile Strength Yield (lb/in width) 2. Tensile Strength at Break (lb/in width) 3. Elongation at Yield (%) 4. Elongation at Break (%)	ASTM D638 (Type IV)	 126 90 12 100
Puncture Resistance (min. avg.) (Lbs.)	ASTM D4833	90
Tear Resistance (lbs, min.)	ASTM D1004	42
Stress Crack Resistance[b] (minimum hours with no failure)	ASTM D5397 (Attachment)	200
Puncture Resistance (min. avg.) (Lbs.)	ASTM D4833	90
Carbon Black Content (% Allowable Range)	ASTM D1603	2 – 3
Carbon Black Dispersion	ASTM D5596 (Attachment)	1 or 2

a The yield stress used to calculate the applied load for the SP NCIL test should be the manufacture's mean value via MQC testing.
b Five replicate samples with 5 of 5 > 200 hrs.

Rolls shall be labeled such that it is possible to relate each roll with manufacturing quality control documentation and raw material documentation.

9-37.3 Geocomposite

The polymer used to manufacture the geonet shall be non thermally degraded polyethylene, which is clean, and free of any foreign contaminates. The manufactured geonet shall conform to the property requirements listed below and shall be free of defects including tears, nodules or other manufacturing defects which may affect its serviceability.

Property	Test Method	Geonet Value
Polymer Density (g/cm^3) minimum	ASTM D1505	0.940
Polymer Melt Index (g/10 min) maximum (Condition E)	ASTM D1238	0.5
Carbon Black Content (%)	ASTM D4218	2 – 3

INFORMATIONAL COPY ONLY, NOT FOR BIDDING

Property	Test Method	Geonet Value
Thickness (inches) minimum	ASTM D5199	0.200
In Plane Flow Rate (gpm/ft) minimum	ASTM D4716	7.5
Mass per Unit Area (lbs/sq ft) minimum	ASTM D5261	0.162
Tensile Strength (lbs/in) (Machine direction) minimum	ASTM D5035	45

In Plane Flow Rate shall be measured using water at 68º F with a gradient of 0.1 under a normal pressure of 14.5 pounds per square inch. Geotextiles shall be attached to the geonet in the same configuration as will be used in the field for Transmissivity testing. The geocomposite shall be sandwiched between two (2) steel plates. A minimum seating period of 24 hours shall be used.

The geonet shall be covered on both sides with a geotextile. The geotextile shall comply with the requirements specified in Section 9-37.4, and shall be a Type 1.

A geocomposite shall be created by heat bonding geotextiles to the geonet with ply adhesion meeting the requirements of ASTM D413. The bond between the geotextile and the geonet shall exhibit an average ply adhesion of 1 pound per inch.

9-37.4 Geotextile

The geotextile shall be nonwoven and consist of polymeric fibers or filaments composed of polypropylene or polyester, and shall be a Type 1. The fibers and filaments shall be oriented into a stable network whereby they retain their positions relative with each other. Geotextile shall be free of any chemical treatment or coating which reduces permeability, be inert to chemicals commonly found in soil, and shall be mildew resistant. The geotextiles shall be guaranteed needle free by the manufacturer. The geotextile cushion layer shall be a Type 2. The geotextile shall conform to the following minimum average roll value for the physical properties (in each principal direction):

Property	Test Method	Type 1 Value	Type 2 Value
Mass per Unit Area (oz/sy)	ASTM D5261	8.0	12.0
Tensile Strength (lbs)	ASTM D4632	200	300
Elongation (%)	ASTM D4632	50	50
Puncture Strength (lbs)	ASTM D6241	600	180
Trapezoidal Tear Strength (lbs)	ASTM D4533	75	115
Flow Rate (gpm/sq. ft)	ASTM D4491	110	75
Apparent Opening Size (AOS) (US Std Sieve)	ASTM D4751	80	100

The geotextile shall be furnished in a protective wrapping to protect it from ultraviolet radiation and from damage due to shipping and handling.

INFORMATIONAL COPY ONLY - NOT FOR BIDDING

9-37.5 Geonet

Provide all new materials, free from defects. The geonet shall be manufactured by extruding two sets of polyethylene strands to form a three dimensional structure to provide for planar flow. The polymer used to manufacture the geonet shall be non thermally degraded polyethylene, which is clean, and free of any foreign contaminates. The manufactured geonet shall conform to the property requirements listed below and shall be free of defects including tears, nodules or other manufacturing defects which may affect its serviceability.

Property	Test Method	Geonet Value
Polymer Density (g/cm^3) minimum	ASTM D1505	0.940
Polymer Melt Index (g/10 min) maximum (Condition E)	ASTM D1238	0.5
Carbon Black Content (%)	ASTM D4218	2 – 3
Thickness (mils) minimum	ASTM D5199	200
In Plane Flow Rate (gpm/ft) minimum	ASTM D4716	5.0
Mass per Unit Area (lbs/sq ft) minimum	ASTM D5261	0.162
Tensile Strength (lbs/in) (Machine direction) minimum	ASTM D5035	45

In Plane Flow Rate shall be measured using water at 68 degrees F with a hydraulic gradient (i = 1) under a normal pressure of 10,000 pounds per square foot. The geonet shall be sandwiched between two (2) metal plates. A minimum seating period of 15 minutes shall be used.

Add the following new section and subsections:

(******)

9-38 SOILS

9-38.1 Embankments

Embankments shall consist of material from excavation areas or from borrow area shown on the Drawings. Embankment soil shall be well graded and have a rock size no larger than 6 inches.

9-38.2 Liner Cover Layer

The liner cover layer shall come from an offsite borrow source.

The liner cover layer shall be in accordance with 2016 Washington State Standard Specifications, Section 9-03.12(4) for gravel backfill for drains. Particle size analysis of soils shall be in accordance with ASTM D422.

The liner cover layer material shall contain no particles greater than 1-inch and no more than 2 percent passing the 200 sieve, and shall be free of deleterious substances, debris, sharp objects, or other matter potentially damaging to the liner system.

INFORMATIONAL COPY ONLY - NOT FOR BIDDING

9-38.3 Bedding Layer

The bedding layer shall come from an offsite borrow source.

The bedding layer shall be in accordance with 2016 Washington State Standard Specifications, Section 9-03.12(3) for pipe zone bedding. Particle size analysis of soils shall be in accordance with ASTM D422.

9-38.4 Rock Armor

The rock armor for the project shall be the on-site, Owner supplied stockpile material (see Drawings C1.0 for stockpile location) and has the following gradation:

Sieve Size	Percent Passing
6 to 8-inch square	100
3-inch square	0 – 15
2-inch square	0 – 5
1-inch square	None

9-38.5 Crushed Surfacing

The crushed surfacing shall come from an offsite borrow source.

The crushed surfacing shall be in accordance with 2016 Washington State Standard Specifications, Section 9-03.9(3) for Top Course and Keystone. Particle size analysis of soils shall be in accordance with ASTM D422.

END OF DIVISION 9

INFORMATIONAL COPY ONLY - NOT FOR BIDDING

Special Provisions

Part 2, CSI System

INFORMATIONAL COPY ONLY - NOT FOR BIDDING

Division 01

General Requirements

INFORMATIONAL COPY ONLY - NOT FOR BIDDING

SECTION 01 25 00
SUBSTITUTION PROCEDURES

PART 1 – GENERAL

1.01 GENERAL DESCRIPTION

A. Section includes the following:

1. Products submitted as “Or Approved Equal.”

2. Substitution procedures prior to submission of proposals.

3. Substitution procedures after Contract Execution.

1.02 DEFINITIONS

A. Approved Equal: A material, product, equipment, or process proposed by the Contractor that has the same function, quality, durability, appearance, strength, and design characteristics Equal To or better than those originally specified in the Contract Documents; and shall be compatible with all other systems, parts or components of the Project and Work under the Contract.

B. Equal To: A material, product, equipment, or process proposed by the Contractor being the same, or identical in value, and having no variance in proportion, structure, quantity, measure, or nature than those originally specified in the Contract Documents.

C. Manufacturer: The entity or firm that produces, manufactures or assembles a material, product or item of equipment incorporated in the Work. “Vendor” and “supplier” are used interchangeably with Manufacturer.

1. Manufacturers specifically named in the Specification sections are believed to have the capability of producing products, assemblies and/or systems that meet the requirements of the Contract Documents. Proposing a product, assembly or system produced by one of the named Manufacturers does not relieve the Contractor of the responsibility to demonstrate that the proposed product, assembly or system meets the requirements of the Contractor Documents.

D. Manufacturer’s Representative: The person or persons designated by the Manufacturer as its representative(s) and technical authority(s) who is/are knowledgeable about and able to answer technical questions about the Manufacturer’s products, equipment and services.

E. Manufacturer’s Instructions: Written instructions and recommendations provided by the product Manufacturer regarding the use, installation, preparation of Work to receive the

INFORMATIONAL COPY ONLY- NOT FOR BIDDING

product, or similar written guidance that is to be followed by the installer and provided as part of the product submittal or by the Manufacturer's field representative.

1. Manufacturer's Instructions provided by the Manufacturer's field representative are subject to review and approval of the Engineer.

1.03 SUBMITTALS

A. General: Submit the following in accordance Section 01 33 00, "Submittal Procedures"

B. Substitution Requests:

1. Submit the Substitution Request Form at the end of this section.

1.04 SUBSTITUTIONS

A. General:

1. Substitution Requests shall comply with the following.

a. To be considered for an Approved Equal, complete details, including system layout and shop drawings, shall be submitted by the Contractor to the Engineer as a Substitution Request no later than ten (10) calendar days prior to the bid date.

1) Sufficient data must be submitted so that the Engineer has the required information available to determine that the alternate system meets the required Specifications.

2) The Contractor shall prepare its bid on the basis of the specific equipment and materials specified in the Contract Documents for purpose of determining the low bid.

b. After the execution of the contract, substitution of non-specified equipment will be considered, if the substitution is, in the opinion of the Engineer, equal in quality to that named.

1) If such Substitution Request is approved by the Engineer, all savings affected by the Contractor in the purchase of the substituted equipment shall be passed on to the Owner by reducing the contract price.

2) In submitting for substitution, the Contractor shall provide certified copies of equipment proposals from the named Manufacturer.

B. Substitution of items, materials, and processes:

1. Products for the Project are specified "Or Approved Equal."

a. It is the Contractor's responsibility to demonstrate to the Engineer's satisfaction that the products being proposed are Approved Equals to the products identified in the Contract Documents.

INFORMATIONAL COPY ONLY NOT FOR BIDDING

b. The Engineer will not unreasonably withhold acceptance of an approvable equal product.

1) Decisions of the Engineer regarding substitutions are final and not subject to appeal.

2) Do not assume acceptance at any time prior to written acceptance in a submittal response prepared by the Engineer.

c. Lack of complete information, defective information, or other problem associated with available information for a named product does not relieve the Contractor of the responsibility to demonstrate the approvability and equal-ness of an Approved Equal product for the intended application or purpose.

2. Submit the same required information for products that are being proposed by the Contractor as Approved Equal, as would be required for the named items, materials and equipment.

C. Substitution Requests:

1. Submit a completed Substitution Request Form with the associated submittal information for the material, product, equipment, or process.

a. Fill out the form included in this section fully and completely.

b. The Contractor's Representative shall sign the document.

PART 2 – PRODUCTS

2.01 GENERAL REQUIREMENTS

A. All material, products, and equipment incorporated in the completed Work shall be new and acceptable for the use intended except where reuse of materials, products, and equipment is specifically indicated in the Contract Documents.

PART 3 – EXECUTION

3.01 GENERAL REQUIREMENTS

A. All material, products and equipment incorporated in the completed Work shall be installed in accordance with the Manufacturer's Instructions unless such instructions are contrary to the requirements of the Contract Documents as determined by the Engineer.

END OF SECTION

SUBSTITUTION REQUEST FORM FOLLOWS

INFORMATIONAL COPY ONLY - NOT FOR BIDDING

This Page Intentionally Left Blank

INFORMATIONAL COPY ONLY - NOT FOR BIDDING

SECTION 01 25 00 SUBSTITUTION REQUEST FORM

DATE: _____

PRETREATMENT FACILITY AND EVAPORATION POND CONTRACT FOR
EPHRATA LANDFILL MPE PILOT STUDY

_____ hereby submits for Grant County's
(NAME OF CONTRACTOR)
consideration the following item instead of the specified item for the above project:

SECTION PARAGRAPH SPECIFIED ITEM

_____

PROPOSED SUBSTITUTION: _____
_____
_____

Provide product data sheets, manufacturers' written installation instructions, drawings, details and similar information to demonstrate the Contractor's proposed substitution is an Approved Equal. Where answers require additional space, provide information on additional attached pages. Fill in blanks below:

State differences between proposed substitution and specified item. Differences include but are not limited to interrelationship with other items; materials and equipment; function; utility; life cycle costs; applied finishes; appearance; and quality.

_____
_____
_____
_____

Demonstrate how the proposed substitution is compatible with or modifies other systems, parts, equipment or components of the Project and Work under the Contract.

_____
_____
_____
_____

What effect does the proposed substitution have on dimensions indicated on the Drawings and, if applicable, previously reviewed shop drawings?

_____
_____
_____
_____

INFORMATIONAL COPY ONLY- NOT FOR BIDDING

What effect does the proposed substitution have on the construction schedule and Contract Time?

_____
_____
_____
_____

What effect does the proposed substitution have on the Contract Price? This includes all direct, indirect, impact and delay costs.

_____
_____
_____
_____

Manufacturer's guarantees of the proposed and specified items are:
_____ Same _____ Different (explain on attachment)

The undersigned state that the function, utility, life cycle costs, applied finishes, appearance and quality of the proposed substitution are equal or superior to those of the specified item.

Submitted by:

_____
Contractor's Signature

_____
Firm

Address_____

_____

_____

Date _____

Telephone_____

For use by Grant County Representative:

Accepted _____ Accepted as Noted_____

Not Accepted _____ Received Too Late____

By _____

Date _____

Remark _____

_____

_____

Engineer Remarks on Substitution: _____

INFORMATIONAL COPY ONLY - NOT FOR BIDDING

SECTION 01 33 00

SUBMITTAL PROCEDURES

PART 1 – GENERAL

1.01 DESCRIPTION

A. This section specifies procedures for Contractor submittals. These procedures are supplemental to those in Section 1-05.3 of the Special Provisions.

B. The Contractor shall submit descriptive information which will enable the Owner to determine whether the proposed materials, equipment, testing and schedule for fabrication are in general conformance to the design concept and in compliance with the Contract Documents.

C. The information to be submitted shall consist of drawings, specifications, descriptive data, certificates, test procedures, test results and such other information, as specifically required in the Contract Documents.

1.02 CONTRACTOR RESPONSIBILITIES

A. The Contractor shall be responsible for the accuracy and completeness of the information contained in each submittal and shall ensure that the material, equipment, testing, and schedule for fabrication shall be as described in the submittal.

B. The Contractor shall verify that the material and equipment described in each submittal conforms to the requirements of the Contract Documents.

C. If the information shows deviations from the Contract Documents, the Contractor shall, by statement in writing accompanying the submittal, identify the deviations and state the reason and notify the Engineer in each case for review.

D. The Contractor shall ensure that there is no conflict with other submittals and notify the Engineer in each case where such submittal may affect the work.

E. The Contractor shall ensure coordination of submittals among related crafts.

F. Contractor shall submit two (6) copies of each submittal plus the number of copies the Contractor wants returned.

1.03 SUBMITTALS

A. Items to be submitted by the Contractor to the Engineer for review shall include, but not be limited to:

1. Project Structural Elements

2. Project Electrical Elements

INFORMATIONAL COPY ONLY - NOT FOR BIDDING

3. Project Mechanical Elements

4. Project Area Site Elements

5. Project Area Civil Engineering Elements

6. Contract Required Paperwork

7. Schedule of Values

B. Contractor shall submit any other items not specifically listed, but which are required by other Specifications sections, or are necessary for a complete installation.

PART 2 – PRODUCTS

2.01 INITIAL SUBMITTALS

A. Initial submittals are required before the Contractor mobilizes and begins site work. Initial submittals include but are not limited to: constructions schedule, schedule of values, submittal schedule, permits, health and safety plan, and technical submittals for initial work.

2.02 SUBMITTALS

A. All submittals, shop drawings, catalog cuts, etc., unless otherwise specifically noted, shall be approved and certified by the Contractor as conforming to the Drawings and Specifications.

1. Copies of shop drawings, catalog cuts or other submittals, with the Contractor's approval indicated thereon, shall be sent to the Engineer within one (1) working day of the Contractor's approval.

2. Required shop drawings, catalog data, manufacturer's data and descriptive literature shall be submitted to the Engineer by not later than the expiration of 50 percent of this Contract's time period for performance.

3. Each submittal shall be stamped with the Contractor's approval stamp.

   a. Data submitted in bound volume or on one (1) sheet printed on two (2) sides may be stamped on the front of the first sheet only.

   b. The approval stamp shall have blanks to indicate whether Engineer's review or Contractor approval is required.

INFORMATIONAL COPY ONLY - NOT FOR BIDDING

B. Submittal Identification and Status: Each item of submittal to be incorporated into the project shall be cross-referenced to the Drawings and Specifications so as to identify clearly the use for which it is intended.

1. The Contractor shall maintain at the jobsite an up-to-date Submittal Status Log showing the status of all submittals required by the Contract.

2. A Submittal Schedule of items required to be submitted for each technical section is to be developed, by the Contractor and submitted to the Engineer for approval.

3. The Submittal Schedule shall include the planned date and the latest allowable submittal date of submittals.

4. The Submittal Status Log and Submittals Schedule shall be reviewed at the regular construction progress meetings.

C. Submittal Reviews: All submittals shall be reviewed, approved, and certified by the Contractor, prior to submittal to the Engineer.

D. Variations: Variations from Contract requirements are discouraged.

1. If submittals show variations from the Contract requirements, the Contractor shall describe such variations in writing, separate from the drawings, at the time of submission.

2. If the Engineer approves any such variation, the Engineer shall issue an appropriate Contract modification, except that, if the variation is minor or does not involve a change in price or in time or performance, a modification need not be issued.

E. Warrants for Variations: When requesting a variation, the Contractor shall warrant:

1. That they have reviewed the entire Contract in order to establish that the variation, when incorporated, shall be compatible with all other elements of construction.

2. That they shall take any action and bear any additional expense which may arise by reason of incorporating the proposed variation, including but not limited to change in its or other elements of construction resulting from the incompatibility of the proposed variation with any other element of construction.

F. Manufacturer's Certificates of Conformance or Compliance: The original of all manufacturer's certifications shall name the appropriate item of equipment and/or material, specification, standard or other document specified as controlling the quality of that item, and shall have attached thereto certified copies of test reports upon which the certifications are based.

1. Certificates shall be signed by the manufacturer's official authorized to sign certificates of conformance or compliance.

2. Pre-printed certifications shall not be acceptable.

INFORMATIONAL COPY ONLY- NOT FOR BIDDING

G. Certified Factory Test Reports: Before delivery of materials and equipment, certified copies of the reports of all tests listed in the technical sections (and referenced publications) shall be submitted and approved.

1. The testing shall have been performed in a laboratory meeting the requirements specified herein.

2. The tests shall have been performed within one (1) year of submittal of the reports for approval.

3. Test reports shall be accompanied by notarized certificates from the manufacturer certifying that the material and equipment proposed to be supplied are of the same type, quality, manufacture and make as those tested.

4. If test results are required to be witnessed by an independent testing laboratory, that laboratory shall certify the test report.

   a. Unless specified otherwise or requested by the Engineer, factory tests shall be non-witnessed tests.

H. Complete Submittals: All submittals for each Specification section are to be presented as a complete bound volume.

1. To the maximum extent possible, this requirement shall be followed.

2. Contractor advance coordination and communication with Engineer is encouraged related to all partial submittals.

2.03 SHOP DRAWINGS

A. Drawings: Unless otherwise specifically directed by the Engineer, Contractor shall:

1. Identify each copy of the shop drawings with the Contract Drawing number in the lower right hand corner;

2. Make all shop drawings accurately to a scale sufficiently large enough to show all pertinent features of the item and its method of connection to the work; and

3. Make all shop drawing prints in blue or black on white background.

4. Provide shop drawings as 11- by 17-inch or 22- by 34-inch prints.

5. Provide and appropriately identify each item listed in Paragraph 2.3.B.

INFORMATIONAL COPY ONLY - NOT FOR BIDDING

B. Contractor shall submit the following minimum information with their shop drawings for each model or type of unit supplied by the Contractor.

1. Manufacturer's catalog information, physical and operational description, and specifications.

2. List of all variances from Specifications.

   a. Failure to specifically list and fully explain all variance shall be cause for rejection of submittal.

3. Any other required information to clearly and readily demonstrate compliance with the Specifications.

4. Installation instructions.

5. Design calculations.

6. Manufacturer's Certification of Factory Applied Coating System and coating system technical data sheets, including SDS.

7. Manufacturer's guarantee as specified.

8. Any additional information listed elsewhere in the Specifications and required to be submitted with the shop drawings.

C. When revised for resubmission, Contractor shall clearly identify changes made since previous submission.

D. The Contractor shall not order any materials prior to receipt of the Engineer's submittal response of "NO EXCEPTIONS TAKEN" or "MAKE CORRECTIONS NOTED" for shop drawings.

1. Work performed before acceptance of shop drawings shall be at the Contractor's own risk.

2. In the event of termination for convenience, the Owner shall not be responsible for any materials ordered prior to submittal acceptance.

E. Substitutions: Any substitutions proposed by the Contractor shall require submittals to fully enable the Engineer to evaluate the proposed substitution.

1. Submittals shall clearly note and explicitly describe the details of a proposed substitutions or deviations from the Contract Documents.

2. The Engineer's acceptance of a shop drawing shall not release the Contractor from responsibility for deviations from the Contract Documents.

INFORMATIONAL COPY ONLY - NOT FOR BIDDING

2.04 FINAL SUBMITTALS

A. The Contractor, prior to requesting final payment, shall obtain and submit the following items to the Engineer for transmittal to the Owner:

1. Written guarantees, where required.

2. Completed record drawings.

3. Certificates of inspection and acceptance by local governing agencies having jurisdiction.

4. Releases from all parties who are entitled to claims against the subject project, property, or improvement pursuant to the provisions of law.

PART 3 – EXECUTION

3.01 TRANSMITTAL PROCEDURE

A. General: See Special Provisions 1-05.3 for transmittal.

3.02 REVIEW PROCEDURE

A. See Special Provisions 1-05.3 for submittal review procedures.

END OF SECTION

INFORMATIONAL COPY ONLY - NOT FOR BIDDING

Division 03

Concrete

INFORMATIONAL COPY ONLY- NOT FOR BIDDING

SECTION 03 11 00
CONCRETE FORMING

PART 1 – GENERAL

1.01 QUALITY ASSURANCE

A. Standards:

1. Recommended Practice for Concrete Formwork, ACI 347.
2. Section 1906, International Building Code.
3. U.S. Product Standard PS 1 for Plywood.
4. Standard Grading and Dressing Rules No. 17 of the West Coast Lumber Inspection Bureau.

1.02 DELIVERY, STORAGE, AND HANDLING

A. On delivery to jobsite, place materials in an area protected from weather.

B. Store materials aboveground on framework or blocking and cover with protective waterproof covering providing for adequate air circulation or ventilation.

C. Handle materials to prevent damage.

PART 2 – PRODUCTS

2.01 MATERIALS

A. Plywood: New or in new condition “B-B Plyform Class 1 Exterior” grade plywood, 5/8-inch-minimum thickness.

B. Steel Panels: Flat steel sheet or plate of sufficient thickness, or braced sufficiently, to prevent noticeable deflection from pressure of concrete. Steel forms galvanized and/or coated to prevent rust and staining.

C. Framing, Studding, and Bracing: “Standard” or “Construction” grade West Coast Species lumber.

D. Form Ties: Prefabricated rod of the cone-type snap-tie configuration, or approved threaded internal disconnecting type, to resist all imposed loads of freshly placed concrete, and permit tightening and spreading of forms. Plastic cone snap-ties shall break back 1 to 1-1/2 inches.

E. Form Coating: Lacquer, plastic, or epoxy coating, or nonstaining form oil that will not impair the bonding quality for final finish of the painting or protective coating. Coatings containing mineral oils or other nondrying ingredients will not be permitted.

INFORMATIONAL COPY ONLY - NOT FOR BIDDING

F. Shores and Falsework: Standard patented, manufactured shores, or sound commercial construction lumber.

G. Chamfer Strips: Chamfer strips (for all edges exposed to view) 3/4-inch, 45-degree bevel wood strips or reusable plastic triangular strips.

PART 3 – EXECUTION

3.01 DESIGN OF FORMWORK

A. Design formwork to safely support vertical and lateral loads, which might be applied until such loads can be supported by the concrete structure. Carry vertical and lateral loads by formwork system to ground or to in-place construction, which has attained adequate strength for that purpose.

B. Design forms and falsework to include assumed values of live load, dead load, weight of moving equipment operated on formwork, concrete mix, height of concrete drop, vibrator frequency, ambient temperature, foundation pressures, stresses, lateral stability, and other factors pertinent to safety of structure during construction.

C. Provide shores and struts with positive means of adjustment capable of taking up formwork settlement during concrete placing operations, using wedges or jacks or a combination thereof. Provide trussed supports when adequate foundations for shores and struts cannot be secured.

D. Form facing materials shall be supported by structural members spaced to prevent deflection. Design camber in formwork as required for anticipated deflections.

E. Design formwork to be readily removable without impact, shock, or damage to cast-in-place concrete surfaces and adjacent material.

F. Keep oil or other agents from getting on reinforcing steel, embedded items, or other surfaces requiring bond with concrete.

3.02 LAYOUT OF FORMWORK

A. Locate and stake out all forms and establish all lines and levels and elevations.

3.03 CONSTRUCTION OF FORMS

A. Formwork – General:

1. Before concrete is placed in any form, verify horizontal and vertical form position and correct all inaccuracies. Complete all wedging and bracing in advance of placing of concrete.

2. When setting form ties leave no metal to remain in walls closer than 1 inch from surface. Ties shall fit tight to prevent mortar leakage at holes in forms. Ties shall be

INFORMATIONAL COPY ONLY - NOT FOR BIDDING

protected from rusting at all times. No wire ties or wood spreaders will be permitted. Cutting ties back from concrete face will not be permitted.

3. At construction joints, anchor forms by using an adequate number of form ties in the new pour a few inches from the construction joints. Do not rely on ties adjacent to the joint used in previous placements.

4. For exposed concrete, forms shall be of new plywood, metal panel, or approved panel materials, smooth, and continuous.

5. For unexposed concrete, forms shall be plywood, metal, boards, or approved material. Boards, nominal 1-inch-minimum thickness, sound and tight, commercial construction lumber, shiplapped or tongue-and-grooved, dressed on at least one side and both edges for tight fit. Use plywood, metal, or approved material equal to or better than board surface.

B. Chamfered Corners: Chamfer all corners that will be exposed to view 3/4 inch, unless shown otherwise on Drawings. Provide 45-degree triangular moldings in forms for all chamfering required.

1. Inspection and Cleanout Openings: Provide inspection and cleanout openings at the bottom of all forms for columns, pilasters, walls over 8 feet in height, and for forms for irregularly shaped placement where cleaning and inspection from the top would be impractical.

C. Coordination: Coordinate the installation of all items to be inserted or embedded in concrete. Support all items to maintain accurate alignment and prevent distortion during concrete placement.

D. Cleaning: All dirt, chips, sawdust, mud, water, and other foreign matter shall be removed from within the forms or within the excavated areas before any concrete is deposited therein.

3.04 NOTIFICATION AND INSPECTION

A. Prior to placing of any concrete, and after placement of reinforcing steel in the forms, notify the Engineer at least 24 hours in advance of placing concrete to permit inspection.

3.05 DEFECTIVE WORK

A. Any form movement or deflection during construction or finished surface variations in excess of the tolerances specified will be basis for rejection of cast-in-place product and requirement for replacement of same.

INFORMATIONAL COPY ONLY - NOT FOR BIDDING

3.06 REMOVAL OF FORMS

A. Do not remove forms and supports until concrete has attained sufficient strength to support anticipated loads.

B. The listing below serves only as a guide in determining the minimum length of time required before removal of forms and is based on the use of Type I portland cement. When high early strength portland cement is used, the length of time listed below may be reduced to not less than one-third time listed, but not less than 1 day.

   1. Walls in Mass Work: 24 hours.

   2. Thin Walls (12 inches or less): 48 hours.

   3. Columns: 7 days.

C. Use methods of form removal that will not cause overstressing of the concrete. Remove supports to permit the concrete to uniformly and gradually take the stress due to its own weight. Do not use high impact methods to remove supports.

D. Break back ties after concrete has cured sufficiently to maintain unbroken bond with steel rod.

3.07 REUSE OF FORMS

A. Any reused form for exposed concrete work shall be reconditioned to “like new” condition. Any reused form shall be cleaned, repaired, and recoated before each reuse.

3.08 BLOCK OUTS

A. Where pipes, castings, or conduits pass through the walls, place such pipes or castings in the forms before pouring the concrete, or in special cases, with the express consent of the Engineer or as specified, build accepted boxes in the forms to make cored openings for subsequent insertion of such pipes, castings, or conduits. Provide boxes or cores with slight flare to facilitate grouting and the escape of entrained air during grouting.

END OF SECTION

INFORMATIONAL COPY ONLY - NOT FOR BIDDING

SECTION 03 15 19

ANCHORS, INSERTS, AND EMBEDDED PRODUCTS

PART 1 – GENERAL

1.01 SUMMARY

A. This section specifies the materials and installation requirements for metal embedment into concrete or grouted masonry.

B. Items Included:

1. Cast-in-place anchor bolts (anchor rods).
2. Inserts for structural attachments.
3. Collars or sleeves for pipe penetrations.
4. Post-installed anchors.

1.02 SUBMITTALS

A. Shop Drawings for all anchors, inserts, and embedded products (wall castings, pipes with seep rings, and special castings or fabrications).

B. Manufacturer's Data: Submit complete data including dimensions, resins, colors, and other information.

C. Current ICBO Evaluation Reports for all expansion and adhesive anchors.

PART 2 – PRODUCTS

2.01 MATERIALS

A. Anchor Bolts: ASTM F1554 Grade 36 or ASTM A307, galvanized steel unless otherwise noted. Configuration shall be as shown or noted on the Drawings.

B. Expansion Anchors: ICBO approved for use in cracked and uncracked concrete for all anchors used for wind or seismic anchorage applications.

1. Stainless Steel:

   a. Stud: Stainless steel bar conforming to ASTM A276 with chemical composition of either AISI 304 or 316.

   b. Wedge: Manufactured from either AISI 304 or 316 stainless steel.

INFORMATIONAL COPY ONLY - NOT FOR BIDDING

c. Nut: Stainless steel conforming to ASTM F594 with chemical composition of either AISI 304 or 316 and meeting dimensional requirements of ANSI B18.2.2.

d. Washer: AISI 304 or 316 stainless steel conforming to ASTM A240.

2. Products:

a. Hilti, Kwik-Bolt TZ.

b. Powers Fasteners, Power-Stud, and SD1 and SD2.

c. Simpson Strong Tie, Strong-Bolt.

d. Other manufacturers upon approval of Engineer.

C. Adhesive Anchors:

1. Anchor rod material shall conform to ASTM A304 stainless steel unless ASTM A316 is called out on the Drawings.

2. Products:

a. Hilti, HIT-RE 500-SD.

b. Powers Fasteners, PE1000+.

c. Simpson Strong-Tie, SET-XP.

d. Other manufacturers upon approval of Engineer.

D. Stainless Steel Plates and Shapes: Conform to AISI Type 304 unless otherwise noted.

PART 3 – EXECUTION

3.01 INSTALLATION

A. Coordinate the location and placement of all items to be embedded in concrete.

B. Coat any embedded aluminum with asphalt paint.

C. Adhesive and expansion anchors to be installed in holes drilled with carbide tipped drill bits. Anchors shall be installed per manufacturer's recommendations. Insert and tighten bolts in accordance with manufacturer's installation instructions. In case of interference with reinforcing bars or steel objects, notify the Engineer.

3.02 EMBEDDING

A. Set accurately and hold in position all embedded products during placement until the concrete is set.

INFORMATIONAL COPY ONLY - NOT FOR BIDDING

3.03 INSPECTION

A. Anchors shall be inspected by Special Inspector as required by the Inspection Requirements described in the Structural General Notes contained on the Drawings or as required by the Building Official.

END OF SECTION

INFORMATIONAL COPY ONLY - NOT FOR BIDDING

This Page Intentionally Left Blank

INFORMATIONAL COPY ONLY - NOT FOR BIDDING

SECTION 03 20 00
CONCRETE REINFORCING

PART 1 – GENERAL

1.01 QUALITY ASSURANCE

A. *Manual of Standard Practice for Detailing Reinforced Concrete Structures*, ACI 315.

B. *Manual of Standard Practice*, Concrete Reinforcing Steel Institute.

1.02 SUBMITTALS

A. Placing Drawings, Bending, and Cut-Sheet Schedules.

B. Mill test reports for each shipment of reinforcement shall be submitted to the Engineer for review.

C. All wall reinforcement to be shown in elevation on the Shop Drawings.

1.03 DELIVERY, STORAGE, AND HANDLING

A. Deliver reinforcement to project site in bundles marked to coordinate with placement Drawings.

B. Handle and store to prevent contamination from dirt, oil, and other materials, which will affect bond.

C. Store a minimum of 6 inches above ground and in locations where the material will not be subject to abuse.

PART 2 – PRODUCTS

2.01 MATERIALS

A. Reinforcing Bars: Unless specified otherwise, all bars for concrete reinforcement shall be deformed bars meeting the requirements of ASTM A615, Grade 60, "Billet Steel Bars for Concrete Reinforcement."

B. Welded Wire Fabric: Steel, conforming to ASTM A185, 65 ksi yield strength. Supply in sheets; rolls are not acceptable.

C. Tie Wire: Steel, black annealed, 16 gauge minimum.

D. Reinforcing Bar Supports: Per CRSI "*Manual of Standard Practice*," Chapter 3, pregalvanized or plastic coated.

INFORMATIONAL COPY ONLY - NOT FOR BIDDING

PART 3 – EXECUTION

3.01 INSTALLATION

A. Placement and Tolerances: Conform to CRSI *Manual of Standard Practice*.

B. Splices:

1. Do not splice bars except at locations shown or noted on the Drawings or as otherwise approved.

2. Tie lap splices securely with wire to prevent displacement of splice during placement of concrete.

C. Cleaning: Remove dirt, grease, oil, loose mill scale, excessive rust, and foreign matter that may reduce bond with concrete.

D. Protection during Concreting: Keep reinforcing in proper position during concrete placement.

E. Concrete Cover: Maintain minimum concrete cover over reinforcement as specified in ACI 318 or as noted. Bend tie wire away from concrete surfaces to maintain required clearances.

END OF SECTION

INFORMATIONAL COPY ONLY - NOT FOR BIDDING

SECTION 03 30 00

CAST-IN-PLACE CONCRETE

PART 1 – GENERAL

1.01 QUALITY ASSURANCE

A. Materials and work shall conform to the requirements of standards and recommended practices required in this section. In conflicts between industry standards, required standards and this specification, or this specification and the local building code, the more stringent requirement shall govern.

B. Standards:

1. Concrete is designed and controlled by the latest edition of the following:

   a. ACI 301, "Specifications for Structural Concrete for Buildings."

   b. Field Reference Manual (ACI Publication SP-15).

2. Contractor shall have available in the field office a copy of the ACI Field Reference Manual SP 15. This field reference manual is a compilation of ACI 301 and selected ACI and ASTM references listed in that specification.

C. Evaluation and Acceptance: Strength level of concrete will be satisfactory if 90 percent of strength test results and averages of all sets of three consecutive strength test results equal or exceed specified strength and not more than 1 test result in 100 is below specified strength by more than 500 psi.

D. Concrete Test Cylinders:

1. Contractor will retain and pay for the services of an independent testing laboratory. Contractor shall coordinate and cooperate with testing service and the Engineer to perform the following:

   a. Prepare a minimum of three test cylinders for each location (slab, wall, etc.) for each day's placement or every 100 cubic yards, whichever is less.

2. Test set of three cylinders as follows:

   a. One at 7 days.

   b. Two at 28 days.

3. Prepare and test cylinders per ASTM C31 and C39.

E. Prior to placement, have available at placement location all tools, cylinder molds, slump cone, rod, curing containers, and all other apparatus required for sampling and testing.

F. Air Entrained: One test for each mix design.

INFORMATIONAL COPY ONLY NOT FOR BIDDING

1.02 SUBMITTALS

A. Submit two copies of trial mix designs proposed and one copy each of 30 consecutive test results and the mix design used from a record of past performance in accordance with ACI 301.

B. Submit manufacturer's certification of meeting these specifications for materials proposed including names, sources, descriptions, and warranties for cement, fly-ash, grouts, water-reducing admixtures, epoxy bonding materials, and curing compounds.

C. Submit a sample ready-mixed concrete delivery ticket.

1.03 STORAGE OF MATERIALS

A. Maintain in continuous clean environment and in manner required to maintain homogeneity.

B. Cements, grouts, and mortar containerized and kept in dry humidity environment. Engineer shall reject materials, which have hardened or show any evidence of initial hydration.

1.04 PRODUCT WARRANTY

A. The material manufacturer's standard warranty shall not contain any disclaimer limiting their responsibility to just the purchase price of the material. The manufacturer shall be willing to participate with the Contractor in replacing or repairing any area found to be defective due to faulty materials as determined by accepted test methods.

B. The technical data sheet of the manufacturer shall not have any statement of warranty that would be more limited than this warranty or contain any disclaimer.

PART 2 – PRODUCTS

2.01 CONCRETE

A. ASTM C94 and mix design approved by Engineer.

B. Strength:

1. Schedule (except as noted):

Type of Structure	Minimum Compressive Strength	Maximum Water/Cement Ratio
Building Structures (foundations, above-grade walls)	4,000 psi at 28 days	0.45
Building Floor Slabs	4,000 psi at 28 days	0.45
Miscellaneous Structures	4,000 psi at 28 days	0.45

INFORMATIONAL COPY ONLY - NOT FOR BIDDING

2. Cementitious content for 4,000 psi concrete shall not be less than 520 pounds per cubic yard of concrete.

3. Entrained air 5-1/2 plus or minus 1 percent.

4. Maximum slump 3 inches; 4 inches for walls (without use of water-reducing admixtures). Where water-reducing admixtures are required to increase workability necessary to facilitate placement of low water, cement ratio concretes, slump range may be 6 to 11 inches in strict accordance with manufacturer's recommendations.

C. Cement ASTM C150: Type I or Type II for all structures.

D. Aggregates:

1. For concrete 12 inches thick or less, maximum aggregate size 3/4 inch conforming to ASTM C33, grading No. 67.

2. For concrete over 12 inches thick, maximum aggregate size 1-1/2 inch, conforming to ASTM C33, grading No. 467.

3. Maximum wear 50 percent at 500 revolutions, AASHTO 96.

E. Water: Clear, free from injurious amounts of oil, acid, salt, alkali, organic matter, or other deleterious substances.

F. Admixtures:

1. Shall be subject to approval of the Engineer.

a. General:

1) Use only those specified in approved mix design.

2) Apply in strict accordance with manufacturer's printed instructions.

3) No chloride contents permitted.

4) Must be compatible with other admixtures.

2. Air-Entraining Agent: Air entrainment admixtures shall conform to ASTM C260.

3. Water-Reducing Admixture: Water-reducing admixture shall be Eucon WR-75 by Euclid Chemical, Polyhead by BASF, or Plastocrete 161 by Sika, conforming to ASTM C494, Type A.

4. High-Range Water-Reducing Admixture: High-range water-reducing admixture (superplasticizer) shall be Rheobuild 1000 by BASF, Eucon-37 by Euclid, BASF Super P, or Sikament by Sika, conforming to ASTM C494, Type F.

INFORMATIONAL COPY ONLY - NOT FOR BIDDING

5. Accelerating Admixture: Accelerating admixture, when used, shall be Accelguard 80 by Euclid, Darex Set Accelerator by W.R. Grace, or Pozzutec 20 by BASF. The admixture shall conform to ASTM C494, Type E.

6. Retarding Admixture: Retarding admixture, when used, shall be Eucon Retarder-75 by Euclid, Pozzolith 100-XR by BASF, or Plastocrete 161R by Sika, conforming to ASTM C494, Type D.

2.02 GROUT

A. For equipment, beam bearings and column bases use non-shrink, non-straining, premixed grout, Masterflow 928 by BASF, or equivalent. Apply in accordance with the manufacturer's recommendations.

B. For Anchoring Dowels and Reinforcing Bars: Epoxy grout shall be medium viscosity epoxy conforming to ASTM C881 Types I, II, III, Classes B and C. Epoxy grout shall be Burke 881 LPL epoxies, or Sikadur 31 Hi-Mod Gel by Sika Corporation, or Concresive paste LPL by BASF, or equivalent. Application shall be per the manufacturer's recommendations.

C. For Fill (Manhole or Basin Bottom Fill): 400 pounds of cement, 120 pounds of fly ash per cubic yard of concrete, 3/8-inch-maximum aggregate, W/C = 0.45.

D. Lean Concrete: 100 pounds of cement, 300 pounds of fly ash per cubic yard of concrete, W/C = 0.50.

2.03 CURING MATERIALS

A. Polyethylene Sheeting: 0.004-inch thick.

B. Waterproof Paper: Polyethylene-coated, Federal Specification UU-B-790 Type I, Grades A, B, C, Style 4. Define lap control lines clearly by printed markings.

C. Membrane Forming Compound: ASTM C309-81 Masterkure manufactured by BASF.

2.04 BONDING AGENT

A. Epoxy Adhesive Bonding Agent: A two-component compound, 100 percent solids, 100 percent reactive compound suitable for use on dry or damp surfaces. Provide manufacturer's specific instructions for application. Concresive Liquid (LPL) by BASF, or Sikadur 32 Hi Mod LPL by Sika, or equivalent.

2.05 HOT WEATHER FINISHING AID

A. Evaporation retardant used to retard rapid evaporation of water from exposed concrete. "Confilm" by BASF.

INFORMATIONAL COPY ONLY - NOT FOR BIDDING

PART 3 – EXECUTION

3.01 MIXING AND TRANSPORTATION

A. Ready-Mixed Concrete: Conform to ASTM C94 Alternate No. 3.

3.02 PLACING

A. Deliver only in sufficient quantities required for specified time interval use and placement. Discard concrete having initial set before placement. No remixing with water or supplementing with other materials will be permitted once initial set has occurred. Initial set as evidenced by typical hydration characteristics to be determined by Engineer.

B. Place as nearly as possible to final position to avoid segregation of the materials and displacement of reinforcement. Placement shall be completed within 30 minutes after water is first added to the mix. However, at the Engineer's discretion if climatic and temperature conditions are suitable and when the concrete is continually agitated, the time may be extended to 1-1/2 hours.

C. Do not change consistency (slump) for a given placement without the Engineer's written permission.

D. Keep open trough and chutes of steel or steel lined clean and free from coatings of hardened concrete.

E. Do not drop concrete a distance of more than 4 feet or through a cage of reinforcing steel unless concrete is designed flowable with the specified superplasticizer included in the mix, then concrete can free fall up to 10 feet.

F. Do not place concrete in horizontal members or sections until the concrete in the supporting vertical members or sections has been consolidated and a 2-hour period has elapsed since placement in the vertical member to permit shrinkage to occur.

G. Layout and sequence of placing of concrete in monolithic structures as shown on the Drawings or approved by the Engineer.

H. Within a placement, deposit concrete in horizontal layers not to exceed 24 inches in depth. Place at rate such that:

   1. No concrete surface shall obtain initial set before additional concrete is placed on it.

   2. Yielding of forms is not so great as to cause the concrete surfaces to exceed the tolerances specified.

I. Unless specified otherwise, place all slabs and finished floors to finish elevation in one continuous operation, except that the Contractor may place a separate finish topping if prior approval is received from the Engineer. Floor and roof slab sectional thicknesses shown are minimum thicknesses. Slopes on floors or roofs increase, rather than decrease, slab thicknesses.

INFORMATIONAL COPY ONLY NOT FOR BIDDING

J. Construction Joints:

1. Limit size of each slab or wall pour as shown on the Drawings, or as approved by the Engineer, or as follows:

   a. Where construction or control joints are shown to be at 60 feet or less, intermediate construction joints will not be required.

   b. Where construction or control joints are not shown, construction joint spacing shall not exceed 40 feet.

2. Locate construction joints so as not to impair the strength of the structure, and only at locations shown on the Shop Drawings or approved by the Engineer.

3. Construct bulkheads to neatly fit reinforcement and water stops and prevent concrete leakage.

4. Provide water stops or sealants in construction joints where required.

5. Continue reinforcement through construction joint unless otherwise shown or noted.

6. When noted, alternate pour at each side of construction joints with specified minimum curing time between pours.

7. Before placing concrete against previously placed concrete, thoroughly roughen and clean by wet sandblasting or green cutting with an air-water jet.

   a. Use air-water cutting at the proper time after the initial set. Use a high-pressure air-water jet to expose clean, sound aggregate without undercutting the edges of the larger aggregate. Protect adjacent subgrade when cutting is used on slab edges.

   b. After cutting or sandblasting, rinse the surface until wash water contains no cloudiness. Dispose of wastes from cutting, washing, and rinsing so wastes do not stain or abrade exposed surfaces.

8. Place concrete continuously to a predetermined construction joint.

K. Care shall be taken in placing concrete through reinforcements so that no segregation of the coarse aggregate occurs. In any placement where segregation may occur, the concrete shall be designed flowable and placed at 6 inches plus slump. Vibrators shall be inserted no farther than 3 feet from the point of placement of concrete into forms, as concrete is being placed.

L. Special care shall be taken to prevent splashing forms or reinforcement with concrete. Any hardened concrete or partially hardened concrete on the forms or reinforcements above the level of the concrete already in place shall be removed before proceeding with the work.

INFORMATIONAL COPY ONLY - NOT FOR BIDDING

M. Cold Weather Placement:

1. Concrete shall be placed only when the temperature is at least 40 degrees F, and rising, unless permission to pour is obtained from the Engineer.

2. Material shall be heated and otherwise prepared so that batching and mixing can proceed in full accord with the provisions of this specification.

3. Suitable means shall be provided for maintaining the concrete at a temperature of at least 50 degrees F for a period of at least the first 5 days and at a temperature above freezing for the remainder of the specified curing period, except that where high-early-strength cement is used, this period may be reduced to 72 hours. The methods proposed for heating the materials and protecting the concrete shall be approved by the Engineer.

4. Salts, chemicals, or other materials shall not be mixed with concrete for the purpose of preventing freezing. Accelerating agent shall be Pozzutec 20 by **BASF/**Master Builders, Inc., applied per the manufacturer's recommendations.

N. Hot Weather Placement:

1. The temperature of fresh concrete at the time of placement during hot weather shall be a maximum of 90 degrees F, to prevent an accelerated setting of the concrete.

2. A retarding densifier admixture shall be used when the high expected atmospheric temperature for the day is 85 degrees F or above. Admixture shall be used in accordance with the manufacturer's recommendations.

O. Placing Concrete Against Earth:

1. Unless otherwise called for on the Drawings, earth cuts shall not be used as forms for vertical surfaces without the prior approval of the Engineer.

2. Concrete placed on or against earth shall be placed only upon or against firm, damp surfaces free from frost, ice, and standing or running water. Concrete shall not be placed upon mud or upon fills until the required compaction has been obtained.

P. Placing Concrete Slabs: Smooth subgrade surface irregularity with thin film of masonry sand.

3.03 COMPACTING

A. Compact all concrete with high-frequency internal vibrators immediately after placing.

B. Use external vibrators for compacting concrete where the concrete is inaccessible for adequate compaction by internal vibrators; construct forms sufficiently rigid to resist displacement or damage from external vibration.

C. Use mechanical vibrating equipment, always keeping the vibrator within 3 feet of the discharge point into the form. For exposed concrete surfaces and architectural concrete,

INFORMATIONAL COPY ONLY - NOT FOR BIDDING

keep the vibrator on the unexposed side of the reinforcing steel or at least 2-1/2 inches from the form surface. Vibrate the concrete as the concrete is being placed to prevent honeycomb, rock pockets, and voids. Do not insert vibrators into lower layers of concrete that have begun to set.

3.04 CURING AND PROTECTION

A. General:

1. Maintain at site, ready to install, before actual concrete placing begins, all equipment and materials needed for optimum concrete curing and protection; maintain extra vibrators on standby in case of malfunction of any unit.

2. Protect finished surfaces or edges from stains, abrasions, and breakage during the entire construction period.

3. Protect all concrete from accelerated drying and excessive heat at all times. Close all conduits and other formed openings through the concrete during the entire curing period and as long thereafter as practicable to prevent drying of concrete by air circulation.

4. Install slab-curing covers immediately after initial set or as soon as free water has disappeared from the surface of the concrete after finishing or surfacing.

B. Water Curing (use water curing specified herein for all walls and slabs where watertight construction is required):

1. Keep continuously wet by covering with an approved material or by a system of perforated pipes or mechanical sprinklers or other approved methods.

2. Keep forms wet at all times to prevent opening of joints and the drying out of the concrete.

3. Water for curing shall be clean and free from any elements, which might cause objectionable staining or discoloration of the concrete.

4. Cover surfaces completely with sheeting. Where a single sheet does not cover the entire surface, lap ends and edges at least 4 inches, and continuously seal with tape or other suitable means recommended by the manufacturer.

5. Continue waterproof sheet curing for 7 days. Maintain sheeting and edge and end seals intact for entire period. Repair immediately any breaks in the sheeting envelope.

INFORMATIONAL COPY ONLY - NOT FOR BIDDING

C. Curing Compounds (use only when specifically approved and for optimum climatic conditions):

1. Do not use curing compounds unless this use is authorized in writing by the Engineer. Curing compounds are unacceptable where concrete is exposed to the direct rays of the sun or in accelerated drying conditions.

2. All interior slabs shall have membrane-forming compounds that meet the moisture retention required by ASTM C309-81 when applied at a normal single coat.

3. Prior to applying curing compounds to formed surfaces, the surfaces shall be moistened with a spray of water immediately after forms are removed. Moistening shall be continued until the surfaces will not readily absorb more water. The compound shall be applied as soon as the moisture film has disappeared and while the surface is still damp.

4. On slabs, the compounds shall be applied immediately after finishing and after bleeding water and "shine" has disappeared.

5. Curing compounds shall not be used on surfaces where future bonding, painting, or protective coating is required. In cold weather, curing compounds shall not be used on concrete surfaces, which are kept at curing temperature, by the use of steam.

3.05 REPAIRING CONCRETE

A. Immediately after removal of forms, break back all form ties and inspect concrete surfaces for defects. Complete repair of defects within 48 hours after removal of forms. No repairs shall be made until the defects have been reviewed and method of repair approved by the Engineer.

B. Remove all defective or damaged concrete, including honeycombed, sand streaked, or fractured material from the area to be repaired. Chip out areas to 1-inch-minimum depth. Edge shall be squared with the surface to eliminate feather edges.

C. Before placing the repair material, obtain Engineer inspection. Clean area free of chipping dust, dried mortar, and all other foreign material.

D. Keep surfaces to be repaired continuously wet for at least 3 hours prior to placing new concrete or mortar. No free water on the surface when the repair material is placed.

E. Apply a bonding agent to the area to be repaired before placing repair material. Apply the bonding agent per manufacturer's published instructions attached to container.

F. For all repair surfaces permanently exposed to atmosphere use white cement in proportions found by trial to be effective in producing a color which, in the hardened patch, will match the surrounding concrete surface.

INFORMATIONAL COPY ONLY-NOT FOR BIDDING

G. Make repairs by: (1) dry-packing, (2) filling with concrete, or (3) plastering with mortar or a combination of all three in conformance with the following:

1. Use the dry-pack method for holes at least 1 inch deep where the depth is equal to, or greater than the smallest surface dimension of the defect, such as cone-bolt or form tie holes, and for narrow slots cut for the repair of cracks. Do not use the dry-pack method where lateral restraint cannot be obtained. Place and pack dry-pack mortar in layers having a compacted thickness of approximately 3/8 inch. Solidly compact each layer over its entire surface by use of a hardwood stick and hammer. Do not use metal tools for compacting. Compact surface just flush with adjacent area. Do not use steel finishing tools or water to facilitate finishing.

2. Use concrete replacement for (1) holes extending entirely through concrete sections; (2) for holes larger than 1 square foot and deeper than 4 inches in which no reinforcement is encountered; (3) for holes larger than 1/2 of 1 square foot where reinforcement is exposed. Concrete used for replacement shall be of the same strength and mixture as used in the structure.

3. Use mortar replacement for holes too wide to dry-pack and too shallow for concrete replacement and when approved by the Engineer for other conditions not covered by Items (1) and (2) above.

H. Cure all repairs with the same methods as new concrete.

3.06 CONCRETE FINISHES AND TOLERANCE

A. Schedule of Concrete Finishes:

1. Area and Type:

a. Walls: (Not Used)

b. Slabs:

1) Interior Floors: S-1.

2) Top of Footings: S-2.

c. Sidewalks: S-5.

B. Concrete Wall Finish:

1. Type W-1:

a. Fill snap-tie holes with nonshrink, nonmetallic grout.

b. Knock off projections.

c. Patch honeycomb areas and rock pockets. Small air holes do not require patching.

INFORMATIONAL COPY ONLY- NOT FOR BIDDING

C. Concrete Slab Finishes:

1. General:

   a. Do not excessively use “jitterbugs” or other special tools designed for the purpose of forcing coarse aggregate away from the surface and allowing a layer of mortar to accumulate.

   b. Do not dust surfaces with dry materials, except where floor hardener is to be applied.

   c. Thoroughly compact slabs and floors by vibration.

   d. Round off all edges of slabs and tops of walls with a steel-edging tool, except where a cove finish is shown. Steel edging tool radius shall be 1/4 inch for all slabs subject to wheeled traffic.

   e. After applying the final floor finish and after curing cover slabs with Visqueen or other material, keep floor clean and protect it from material and damage due to other construction work.

2. Type S-1 – Concrete Slab Finish Steel Troweled Finish:

   a. Finish by screeding and floating with straight edges to bring surfaces to required finish elevation shown.

   b. While concrete is still green, but sufficiently hardened to bear a person’s weight without deep imprint, float to true, even plane with no coarse aggregate visible.

   c. Use sufficient pressure on floats to bring moisture to surface.

   d. After surface moisture has disappeared, hand trowel concrete to produce smooth, impervious surface, free from trowel marks.

   e. Burnish surface with an additional troweling. Final troweling shall produce a ringing sound from trowel.

   f. Do not use dry cement or additional water during troweling, nor will excessive troweling be permitted.

   g. Power Finishing:

      1) An approved power machine may be used in lieu of hand finishing for finishing concrete floors and slabs in accordance with directions of machine manufacturer.

      2) Do not use power machine when concrete has not attained the necessary set to allow finishing without introducing high and low spots in slab.

      3) Do first steel troweling for slab S-1 finish by hand.

INFORMATIONAL COPY ONLY - NOT FOR BIDDING

3. Type S-2 – Slab Finish Float:

   a. Finish slabs to receive fill and mortar setting beds by screeding with straight edges to bring surface to required finish plane.

   b. Float slab to compact and seal surface.

   c. Remove all laitance and leave surface clean.

   d. Coordinate with other finish procedures.

4. Type S-3 – Not used.

5. Type S-4 – Not used.

6. Type S-5 – Sidewalk Finish:

   a. Slope walks down 1/4 inch per foot away from structures, unless otherwise shown.

   b. Strike off surface by means of strike board and float with wood or cork float to a true plane, then flat steel trowel before brooming.

   c. Broom surface at right angles to direction of traffic.

   d. Lay out sidewalk surfaces in blocks with an approved grooving tool as shown or as directed by the Engineer.

D. Tolerances:

1. Unless otherwise required, allowable tolerances for concrete surfaces shall be in accordance with those shown in the table below. Surface irregularities are classified as either "abrupt" or "gradual." Offsets caused by displaced or misplaced form sheathing, lining, or form section or by defective form lumber shall be considered as abrupt irregularities. All others are classed as gradual irregularities. Gradual irregularities shall be measured with a template consisting of a straight edge for plane surfaces and its equivalent for curved surfaces.

2. The length of the template for testing formed surfaces is 5 feet. The length of the template for unformed surfaces is 10 feet. Maintain a 5-foot-long and a 10-foot-long steel template on the job site.

3. Maximum Allowable Irregularities in Concrete:

	Irregularity in Inches	
Location	Gradual	Abrupt
Walls	1/4	3/16
Slabs	1/4	1/4
Office/Lab Floor	1/8	–

INFORMATIONAL COPY ONLY - NOT FOR BIDDING

3.07 UNSATISFACTORY CONCRETE

A. Any concrete placed which fails to meet or exceed the specified strength requirements as determined from molded cylinders, or cores, or to meet the density or surface requirements, or which has been frozen during placing or curing, shall be removed and replaced with satisfactory materials at the Contractor's expense.

B. Method of Determining Unsatisfactory Concrete: Visual appearance characteristic of rain or freeze damage to concrete which is apparent to the Engineer.

3.08 BONDING TO OLD CONCRETE

A. Clean existing concrete surfaces by using wet sandblast or ultra-high pressure water jet to remove the surface film and contaminants. Roughen to 1/4-inch amplitude or as shown on the Drawings. Coat the contact surfaces with bonding agent specified in paragraph 2.4. Apply the bonding agent in conformance with the manufacturer's instruction. As concrete is placed, thoroughly vibrate against the contact face.

END OF SECTION

INFORMATIONAL COPY ONLY- NOT FOR BIDDING

This Page Intentionally Left Blank

INFORMATIONAL COPY ONLY - NOT FOR BIDDING

SECTION 03 34 13
CONTROLLED DENSITY FILL

PART 1 – GENERAL

1.01 GENERAL

A. Controlled Density Fill (CDF) is approved only at locations shown on the Drawings or as directed by the Engineer.

1.02 SUBMITTALS

A. Submit mix design of cement, fly ash, aggregates, and admixtures.

PART 2 – PRODUCTS

2.01 GENERAL

A. Gravel or rock, reasonably even graded from coarse to fine, in accordance with the Washington Department of Transportation "Standard Specifications for Road, Bridge and Municipal Construction" for Aggregate and Aggregate Base.

2.02 CONTROLLED DENSITY FILL

A. CDF shall be a mixture of Portland cement, fly ash, aggregates, water and admixtures proportioned to provide a non-segregating, self-consolidating, free-flowing and excavatable material that will result in a hardened, dense, non-settling fill.

B. The CDF shall attain a compressive strength of 100 psi.

C. Materials used in CDF mixture shall conform to the following:

Portland Cement	ASTM C-150 or AASHTO M-85
Fly Ash ASTM C-618	Class F or Class C
Aggregates	ASTM C-33
Water	clean and potable
Admixtures	AASHTO M-194 or ASTM C-494 or ASTM C-260

INFORMATIONAL COPY ONLY NOT FOR BIDDING

PART 3 – EXECUTION

3.01 GENERAL

A. All portland cement concrete shall be mixed, handled, placed, compacted, and cured in conformance with OSHD Specifications for mixing, handling, placing, and curing of Structural Concrete.

B. No CDF shall be placed under water.

3.02 PLACEMENT

A. CDF shall be placed in lifts to prevent flotation or shifting of trench walls, pipe, and manholes. The first lift shall be allowed to sufficiently consolidate to provide adequate anchorage for trench walls and pipe before any subsequent lifts are placed. Other methods of insuring proper placement of pipe such as blocking and pinning may be permitted by the Engineer.

B. CDF shall not be placed on frozen ground or during a time when the air temperature is 38 degrees F or less and falling.

3.03 CURING

A. Provide steel plates to span trenches or otherwise prevent traffic or construction equipment coming in contact with CDF until the CDF has hardened sufficiently to prevent rutting.

END OF SECTION

INFORMATIONAL COPY ONLY - NOT FOR BIDDING

Division 06

Wood, Plastics, and Composites

INFORMATIONAL COPY ONLY - NOT FOR BIDDING

SECTION 06 10 00
ROUGH CARPENTRY

PART 1 – GENERAL

1.01 SUMMARY

A. This section includes the following:

1. Framing with dimension lumber.

2. Wood nailers, blocking, and sheathing.

1.02 DELIVERY, STORAGE, AND HANDLING

A. Delivery and Storage:

1. Keep materials under cover and dry. Protect against exposure to weather and contact with damp or wet surfaces.

2. Stack lumber as well as plywood and other panels; provide for air circulation within and around stacks and under temporary coverings including polyethylene and similar materials.

3. For lumber pressure treated with waterborne chemicals, place spacers between each bundle to provide air circulation.

PART 2 – PRODUCTS

2.01 LUMBER, GENERAL

A. Lumber Standards: Furnish lumber manufactured to comply with PS 20 “American Softwood Lumber Standard” and with applicable grading rules of inspection agencies certified by American Lumber Standards Committee’s (ALSC) Board of Review.

B. Inspection Agencies: Inspection agencies and the abbreviations used to reference them with lumber grades and species include the following:

1. WCLIB – West Coast Lumber Inspection Bureau.

2. WWPA – Western Wood Products Association.

C. Grade Stamps:

1. Provide lumber with each piece factory-marked with grade stamp of inspection agency evidencing compliance with grading rule requirements and identifying grading agency, grade, species, moisture content at time of surfacing, and mill.

2. For exposed lumber, furnish pieces with grade stamps applied to ends or back of each piece; or omit grade stamps entirely and provide certificates of grade compliance issued by inspection agency.

INFORMATIONAL COPY ONLY - NOT FOR BIDDING

D. Nominal sizes are indicated, except as shown by detail dimensions. Provide actual sizes as required by PS 20 for moisture content specified for each use.

1. Provide dressed lumber, S4S, unless otherwise indicated.

2. Provide lumber with 19 percent maximum moisture content at time of dressing and shipment for sizes 2 inches or less in nominal thickness, unless otherwise indicated.

2.02 DIMENSION LUMBER

A. For light framing provide “Stud,” “No. 2,” or “Standard” grade lumber for stud framing (2 to 4 inches thick, 2 to 4 inches wide, 10 feet and shorter) and “Stud” or “No. 2” grade for other light framing (2 to 4 inches thick, 2 to 6 inches wide), any species, unless otherwise indicated on the Structural Drawings.

2.03 MISCELLANEOUS LUMBER

A. General: Provide lumber for support or attachment of other construction, including rooftop equipment curbs and support bases, cant strips, bucks, nailers, blocking, stripping, and similar members.

B. Fabricate miscellaneous lumber from dimension lumber of sizes indicated and into shapes shown.

C. Moisture Content: 19 percent maximum for lumber items not specified to receive wood preservative treatment.

D. Grade: “Standard” grade light-framing-size lumber of any species or board-size lumber as required. “No. 3 Common” or “Standard” grade boards per WCLIB or WWPA rules.

2.04 CONSTRUCTION PANELS, GENERAL

A. Construction Panel Standards: Comply with PS 1 “U.S. Product Standard for Construction and Industrial Plywood” for plywood construction panels and, for products not manufactured under PS 1 provisions, with APA PRP-108.

B. Trademark: Furnish construction panels that are each factory-marked with IBC-approved testing agency trademark evidencing compliance with grade requirements.

2.05 CONCEALED PERFORMANCE-RATED CONSTRUCTION PANELS

A. General: Where construction panels are indicated for the following concealed types of applications, provide panels complying with requirements designated under each application for grade designation, span rating, exposure durability classification, edge detail (where applicable), and thickness.

1. Wall Sheathing:

a. Exposure Durability Classification: EXPOSURE 1.

b. Span Rating: As required to suit stud spacing indicated.

2. Floor and Roof Sheathing: As indicated on structural drawings.

INFORMATIONAL COPY ONLY - NOT FOR BIDDING

2.06 CONSTRUCTION PANELS FOR BACKING

A. Plywood Backing Panels: For mounting electrical or telephone equipment, provide fire-retardant-treated plywood panels with grade designation, C-D PLUGGED EXPOSURE 1, in thickness indicated, or, if not otherwise indicated, not less than 15/32 inch.

2.07 AIR INFILTRATION BARRIER

A. Asphalt-saturated organic felt complying with ASTM D226, Type I (No. 15 asphalt felt), unperforated.

2.08 FASTENERS

A. General: Provide fasteners of size and type indicated that comply with requirements specified in this article for material and manufacture.

   1. Where rough carpentry is exposed to weather, in ground contact, or in area of high relative humidity, provide fasteners with a hot-dip zinc coating per ASTM A153 or AISI Type 304 stainless steel.

B. Nails, Wire, Brads, and Staples: FS FF-N-105.

C. Power Driven Fasteners: National Evaluation Report NER-272.

D. Wood Screws: ANSI B18.6.1.

E. Lag Bolts: ANSI B18.2.1.

F. Bolts: Steel bolts complying with ASTM A307, Grade A; with ASTM A563 hex nuts and where bearing against wood, flat washers.

2.09 METAL FRAMING ANCHORS

A. General:

   1. Provide metal framing anchors of type, size, metal, and finish that comply with requirements specified, including the following:

      a. Current Evaluation/Research Reports: Provide products for which ICC-ES code evaluation/research reports exist that are acceptable to authorities having jurisdiction and that evidence compliance of metal framing anchors for application indicated with the building code in effect for this project.

      b. Allowable Design Loads: Provide products for which manufacturer publishes allowable design loads that are determined from empirical data or by rational engineering analysis and that are demonstrated by comprehensive testing performed by a qualified independent testing laboratory.

B. Galvanized Steel Sheet: Steel sheet zinc-coated by hot-dip process on continuous lines prior to fabrication to comply with ASTM A525 for Coating Designation G60 and with

INFORMATIONAL COPY ONLY - NOT FOR BIDDING

ASTM A446, Grade A (structural quality); ASTM A526 (commercial quality); or ASTM A527 (lock-forming quality); as standard with manufacturer for type of anchor indicated.

2.10 PRESERVATIVE WOOD TREATMENT BY PRESSURE PROCESS

A. General: Where lumber or plywood is indicated as preservative-treated wood or is specified herein to be treated, comply with applicable requirements of AWPA Standards C2 (Lumber) and C9 (Plywood). Mark each treated item with the AWPB or SPIB Quality Mark Requirements.

B. Pressure-treat aboveground items with water-borne preservatives to a minimum retention of 0.25 pcf. For interior uses, after treatment, kiln-dry lumber and plywood to a maximum moisture content, respectively, of 19 percent and 15 percent. Treat indicated items and the following:

   1. Wood cants, nailers, curbs, equipment support bases, blocking, stripping, and similar members in connection with roofing, flashing, vapor barriers, and waterproofing.

   2. Wood sills, studs, blocking, and similar concealed members in contact with masonry or concrete.

   3. Wood floor plates installed over concrete slabs directly in contact with earth.

C. Complete fabrication of treated items prior to treatment, where possible. If cut after treatment, coat cut surfaces to comply with AWPA M4. Inspect each piece of lumber or plywood after drying and discard damaged or defective pieces.

PART 3 – EXECUTION

3.01 INSTALLATION, GENERAL

A. Discard units of material with defects that impair quality of rough carpentry construction and that are too small to use in fabricating rough carpentry with minimum joints or optimum joint arrangement.

B. Set rough carpentry to required levels and lines, with members plumb and true to line and cut and fitted.

C. Fit rough carpentry to other construction; scribe and cope as required for accurate fit. Correlate location of nailers, blocking, and similar supports to allow attachment of other construction.

D. Securely attach rough carpentry work to substrate by anchoring and fastening as indicated.

E. Use common wire nails unless otherwise indicated. Select fasteners of size that will not penetrate members where opposite side will be exposed to view or will receive finish materials. Make tight connections between members. Install fasteners without splitting of wood; predrill as required.

INFORMATIONAL COPY ONLY- NOT FOR BIDDING

3.02 WOOD NAILERS AND BLOCKING

A. Install wood nailers and blocking where shown and where required for attachment of other work. Form to shapes as shown and cut as required for true line and level of work to be attached. Coordinate location with other work involved.

B. Attach to substrates as required to support applied loading. Countersink bolts and nuts flush with surfaces, unless otherwise indicated. Build into masonry during installation of masonry work.

3.03 WOOD FRAMING, GENERAL

A. Framing Standard: Comply with the AF&PA Wood Frame Construction Manual, unless otherwise indicated.

B. Install framing members of size and spacing indicated.

C. Anchor and nail as shown, and to comply with the following:

1. National Evaluation Report No. NER-272 for pneumatic or mechanical driven staples, nails, and allied fasteners.

2. Published requirements of manufacturer of metal framing anchors.

3. "Table 2304.9.1 – Fastening Schedule" of the International Building Code.

D. Do not splice structural members between supports.

3.04 STUD FRAMING

A. General: Arrange studs so that wide face of stud is perpendicular to direction of wall or partition, and narrow face is parallel. Install single bottom plate using 2-inch-thick members whose widths equal that of studs; single top plate may be used for non-load-bearing partitions. Nail or anchor plates to supporting construction.

B. Construct corners and intersections with not less than 3 studs. Install miscellaneous blocking and framing as required for support of facing materials, fixtures, specialty items, and trim.

C. Frame openings with multiple studs and headers. Install nailed header members of thickness equal to width of studs. Set headers on edge and support on jamb studs.

1. For nonbearing partitions, install double-jamb studs and headers not less than 4 inches deep for openings 3 feet and less in width, and not less than 6 inches deep for wider openings.

3.05 INSTALLATION OF CONSTRUCTION PANELS

A. General: Comply with applicable recommendations contained in Form No. E30, "APA Design/Construction Guide – Residential and Commercial," for types of construction panels and applications indicated.

INFORMATIONAL COPY ONLY - NOT FOR BIDDING

B. Fastening Methods:

1. Fasten panels as indicated below:

   a. Sheathing: Nail to framing.

   b. Plywood Backing Panels: Nail to supports.

END OF SECTION

INFORMATIONAL COPY ONLY - NOT FOR BIDDING

Division 07

Thermal and Moisture Protection

INFORMATIONAL COPY ONLY - NOT FOR BIDDING

SECTION 07 21 00
BUILDING INSULATION

PART 1 – GENERAL

1.01 SUMMARY

A. This section includes the following:

1. Perimeter insulation for slabs-on-grade.

2. Concealed building insulation.

1.02 SUBMITTALS

A. Product Data: For each type of product indicated.

1.03 QUALITY ASSURANCE

A. Source Limitations: Obtain each type of building insulation through one source.

B. Fire Test Response Characteristics: Provide insulation and related materials with the fire test response characteristics indicated, as determined by testing identical products per test method indicated below by UL or another testing and inspecting agency acceptable to authorities having jurisdiction. Identify materials with appropriate markings of applicable testing and inspecting agency.

1. Surface-Burning Characteristics: ASTM E84.

2. Fire-Resistance Ratings: ASTM E119.

3. Combustion Characteristics: ASTM E136.

1.04 DELIVERY, STORAGE, AND HANDLING

A. Protect insulation materials from physical damage and from deterioration by moisture, soiling, and other sources. Store inside and in a dry location. Comply with manufacturer's written instructions for handling, storing, and protecting during installation.

B. Protect plastic insulation as follows:

1. Do not expose to sunlight, except to extent necessary for period of installation and concealment.

2. Protect against ignition at all times. Do not deliver plastic insulating materials to project site before installation time.

3. Complete installation and concealment of plastic materials as rapidly as possible in each area of construction.

INFORMATIONAL COPY ONLY - NOT FOR BIDDING

PART 2 – PRODUCTS

2.01 INSULATING MATERIALS

A. General:

1. Provide insulating materials that comply with requirements and with referenced standards.

   a. Preformed Units: Sizes to fit applications indicated; selected from manufacturer's standard thicknesses, widths, and lengths.

B. Extruded-Polystyrene Board Insulation:

1. ASTM C578, of type and density indicated below, with maximum flame-spread and smoke-developed indices of 75 and 450, respectively:

   a. Type IV, 1.60 pounds per cubic foot, unless otherwise indicated.

C. Expanded-Polystyrene Board Insulation:

1. ASTM C578, of type and density indicated below, with maximum flame-spread and smoke-developed indices of 75 and 450, respectively:

   a. Type II, 1.35 pounds per cubic foot.

D. Faced Mineral-Fiber Blanket Insulation: ASTM C665, Type III (blankets with reflective membrane facing), Class A (membrane-faced surface with a flame spread of 25 or less); Category 1 (membrane is a vapor barrier), faced with foil-scrim-kraft, foil-scrim, or foil-scrim-polyethylene vapor-retarder membrane on one face; consisting of fibers manufactured from glass.

PART 3 – EXECUTION

3.01 EXAMINATION

A. Examine substrates and conditions, with installer present, for compliance with requirements for sections in which substrates and related work are specified and other conditions affecting performance.

B. Proceed with installation only after unsatisfactory conditions have been corrected.

3.02 PREPARATION

A. Clean substrates of substances harmful to insulations or vapor retarders, including removing projections capable of puncturing vapor retarders or of interfering with insulation attachment.

INFORMATIONAL COPY ONLY - NOT FOR BIDDING

3.03 INSTALLATION, GENERAL

A. Comply with insulation manufacturer's written instructions applicable to products and application indicated.

B. Install insulation that is undamaged, dry, and unsoiled and that has not been left exposed at any time to ice and snow.

C. Extend insulation in thickness indicated to envelop entire area to be insulated. Cut and fit tightly around obstructions and fill voids with insulation. Remove projections that interfere with placement.

D. Apply single layer of insulation to produce thickness indicated, unless multiple layers are otherwise shown or required to make up total thickness.

3.04 INSTALLATION OF PERIMETER INSULATION

A. On vertical surfaces, set units in adhesive applied according to manufacturer's written instructions. Use adhesive recommended by insulation manufacturer.

   1. If not indicated, extend insulation a minimum of 24 inches below exterior grade line.

3.05 INSTALLATION OF GENERAL BUILDING INSULATION

A. Apply insulation units to substrates by method indicated, complying with manufacturer's written instructions. If no specific method is indicated, bond units to substrate with adhesive or use mechanical anchorage to provide permanent placement and support of units.

B. Set vapor-retarder-faced units with vapor retarder to warm side of construction, unless otherwise indicated. Do not obstruct ventilation spaces, except for fire-stopping.

   1. Tape joints and ruptures in vapor retarder, and seal each continuous area of insulation to surrounding construction to ensure airtight installation.

C. Install mineral-fiber blankets in cavities formed by framing members according to the following requirements:

   1. Use blanket widths and lengths that fill the cavities formed by framing members. If more than one length is required to fill cavity, provide lengths that will produce a snug fit between ends.

   2. Place blankets in cavities formed by framing members to produce a friction fit between edges of insulation and adjoining framing members.

   3. Where cavities formed by framing members do not match available standard insulation product width, cut lengths of insulation for a friction fit between ends of insulation and arrange insulation tightly edge to edge. Staple vapor barrier flanges together.

INFORMATIONAL COPY ONLY - NOT FOR BIDDING

D. For wood-framed construction, install mineral-fiber blankets according to ASTM C1320 and as follows:

   1. With faced blankets having stapling flanges, lap blanket flange over flange of adjacent blanket to produce airtight installation after concealing finish material is in place.

E. Stuff glass-fiber, loose-fill insulation into miscellaneous voids and cavity spaces where shown. Compact to approximately 40 percent of normal maximum volume equaling a density of approximately 2.5 pounds per cubic foot.

3.06 PROTECTION

A. Protect installed insulation from damage due to harmful weather exposures, physical abuse, and other causes. Provide temporary coverings or enclosures where insulation is subject to abuse and cannot be concealed and protected by permanent construction immediately after installation.

END OF SECTION

INFORMATIONAL COPY ONLY - NOT FOR BIDDING

Division 08

Openings

INFORMATIONAL COPY ONLY- NOT FOR BIDDING

SECTION 08 11 13
HOLLOW METAL DOORS AND FRAMES

PART 1 – GENERAL

1.01 SECTION INCLUDES

A. Non-fire-rated steel doors and frames.

B. Thermally insulated steel doors.

1.02 REFERENCES

A. ANSI/ICC A117.1 – American National Standard for Accessible and Usable Buildings and Facilities; International Code Council.

B. ANSI A250.8 – SDI-100 Recommended Specifications for Standard Steel Doors and Frames.

C. ANSI A250.10 – Test Procedure and Acceptance Criteria for Prime Painted Steel Surfaces for Steel Doors and Frames.

D. ASTM A653/A653M – Standard Specification for Steel Sheet, Zinc-Coated (Galvanized) or Zinc-Iron Alloy-Coated (Galvannealed) by the Hot-Dip Process.

E. DHI A115 Series – Specifications for Steel Doors and Frame Preparation for Hardware; Door and Hardware Institute; current edition (ANSI/DHI A115 Series).

F. NAAMM HMMA 840 – Installation and Storage of Hollow Metal Doors and Frames; The National Association of Architectural Metal Manufacturers.

1.03 SUBMITTALS

A. Product Data: Materials and details of design and construction, hardware locations, reinforcement type and locations, anchorage and fastening methods, and finishes; and one copy of referenced grade standard.

B. Shop Drawings: Details of each opening, showing elevations, glazing, frame profiles, and identifying location of different finishes, if any.

C. Installation Instructions: Manufacturer's published instructions, including any special installation instructions relating to this project.

D. Manufacturer's Certificate: Certification that products meet or exceed specified requirements.

INFORMATIONAL COPY ONLY - NOT FOR BIDDING

1.04 QUALITY ASSURANCE

A. Manufacturer: Company specializing in manufacturing the products specified in this section with minimum 3 years of documented experience.

B. Maintain at the project site a copy of all reference standards dealing with installation.

1.05 DELIVERY, STORAGE, AND PROTECTION

A. Store in accordance with NAAMM HMMA 840.

B. Protect with resilient packaging; avoid humidity buildup under coverings; prevent corrosion.

PART 2 – PRODUCTS

2.01 ACCEPTABLE MANUFACTURERS

A. Steel Doors and Frames:

1. Ceco Door Products: www.cecodoor.com.

2. Republic Builders Products: www.republicdoor.com.

3. Steelcraft: www.steelcraft.com.

2.02 DOORS AND FRAMES

A. Requirements for All Doors and Frames:

1. Accessibility: Comply with ANSI/ICC A117.1.

2. Door Top Closures: Flush with top of faces and edges.

3. Door Edge Profile: Beveled on both edges.

4. Door Texture: Smooth faces.

5. Hardware Preparation: In accordance with DHI A115 Series, with reinforcement welded in place, in addition to other requirements specified in door grade standard.

6. Galvanizing: All components hot-dipped zinc iron alloy-coated (galvannealed), A60/ZF180.

7. Finish: Factory primed, for field finishing.

B. Combined Requirements: If a particular door and frame unit is indicated to comply with more than one type of requirement, comply with all the specified requirements for each type; for instance, an exterior door that is also indicated as being sound-rated must comply with the requirements specified for exterior doors and for sound-rated doors; where two requirements conflict, comply with the most stringent.

INFORMATIONAL COPY ONLY - NOT FOR BIDDING

2.03 STEEL DOORS

A. Exterior Doors:

1. Grade: ANSI A250.8 Level 3, physical performance Level A, Model 2, seamless.

2. Galvanizing: All components hot-dipped zinc-iron alloy-coated (galvannealed) in accordance with ASTM A653/A653M, with manufacturer's standard coating thickness.

3. Weather Stripping: Separate, see Section 08 71 00, "Door Hardware."

2.04 STEEL FRAMES

A. General:

1. Slip-on or knockdown frames not allowed.

2. Comply with the requirements of grade specified for corresponding door, except:

a. ANSI A250.8 Level 2 and 3 Doors: 14 gauge frames.

3. Finish: Same as for door.

B. Exterior Door Frames: Fully welded.

1. Galvanizing: All components hot-dipped zinc-iron alloy-coated (galvannealed) in accordance with ASTM A653/A653M, with A60/ZF180 coating.

2. Weather Stripping: Separate, see Section 08 71 00.

C. Interior Door Frames, Non-Fire-Rated: Fully welded type.

1. Terminated Stops: Provide at all interior doors; closed end stop terminated 6 inches above floor at 45-degree angle.

2.05 ACCESSORY MATERIALS

A. Removable Stops: Formed sheet steel, mitered, or butted corners; prepared for countersink style tamper proof screws.

B. Silencers: Resilient rubber, fitted into drilled hole; three on strike side of single door, three on center mullion of pairs, and two on head of pairs without center mullions.

C. Temporary Frame Spreaders: Provide for all factory- or shop-assembled frames.

2.06 FINISH MATERIALS

A. Primer: Rust-inhibiting, complying with ANSI A250.10; door manufacturer's standard baked on primer.

B. Bituminous Coating: Asphalt emulsion or other high-build, water-resistant, resilient coating.

INFORMATIONAL COPY ONLY - NOT FOR BIDDING

PART 3 – EXECUTION

3.01 EXAMINATION

A. Verify existing conditions before starting work.

B. Verify that opening sizes and tolerances are acceptable.

3.02 INSTALLATION

A. Install in accordance with the requirements of the specified door grade standard and NAAMM HMMA 840.

B. Coordinate frame anchor placement with wall construction.

C. Coordinate installation of hardware.

3.03 ERECTION TOLERANCES

A. Clearances between Door and Frame: As specified in ANSI A250.8.

B. Maximum Diagonal Distortion: 1/16 inch measured with straight edge, corner to corner.

3.04 ADJUSTING

A. Adjust for smooth and balanced door movement.

3.05 SCHEDULE

A. Locations: As shown on Drawings.

B. Frame Size: 2-inch-deep profile, width as required for wall assembly.

C. Door and Frame Finish: Paint, see Section 09 90 00, “Painting,” color as shown on Drawings.

D. Rating: All doors unrated.

END OF SECTION

INFORMATIONAL COPY ONLY - NOT FOR BIDDING

SECTION 08 36 13
SECTIONAL OVERHEAD DOORS

PART 1 – GENERAL

1.01 SECTION INCLUDES

A. Overhead coiling doors, operating hardware, insulated, non-fire-rated, and manual operation.

1.02 REFERENCES

A. ASTM A653/A653M – Standard Specification for Steel Sheet, Zinc-Coated (Galvanized) or Zinc-Iron Alloy-Coated (Galvannealed) by the Hot-Dip Process; 2002a.

B. ASTM A666 – Standard Specification for Annealed or Cold-Worked Austenitic Stainless Steel Sheet, Strip, Plate, and Flat Bar; 2000.

1.03 SUBMITTALS

A. Product Data: Provide general construction, component connections, and details.

B. Provide certification that door is of the current model and that repair and replacement parts are readily available.

C. Shop Drawings: Indicate pertinent dimensioning, anchorage methods, hardware locations, and installation details.

D. Samples: Submit two slats, slat height by 10 inches in size, illustrating shape, color, and finish texture. Provide manufacturer's full range of color samples.

E. Manufacturer's Instructions: Indicate installation sequence and procedures, and adjustment and alignment procedures.

F. Maintenance Data: Indicate lubrication requirements and frequency and periodic adjustments required.

1.04 DELIVERY, STORAGE AND HANDLING

A. Protect doors and accessories from damage during delivery, storage and installation.

B. Store doors in dry location with adequate ventilation, free from dust and water.

1.05 QUALITY ASSURANCE

A. Single-Source Responsibility: Provide coiling doors and grilles, guides, motors, and related primary components from one manufacturer. Provide secondary components from source acceptable to manufacturer of primary components.

B. Doors shall be designed for standard 100,000-cycle life design.

INFORMATIONAL COPY ONLY - NOT FOR BIDDING

PART 2 – PRODUCTS

2.01 GENERAL

A. Doors shall comply with ANSI/DASMA 102. Metal doors to have horizontal sections hinged together which operate in a system of tracks to completely close the door opening in the closed position and make the full width and height of the opening available for use in the open position.

B. Provide permanent label on the door indicating the name and address of the manufacturer.

C. Provide doors with high lift type designed to slide up and back into a combination vertical and horizontal position.

D. Doors to operate by lifting handles and spring counter balance.

2.02 MANUFACTURERS

A. Sectional Overhead Doors:

1. Northwest Door, Inc.: www.northwestdoor.com

2. Overhead Door Corp: www.overheaddoor.com.

3. Cornell Iron Works, Inc.: www.cornelliron.com.

4. The Cookson Company: www.cooksondoor.com.

2.03 BASIS OF DESIGN

A. Basis-of-Design Product: The design for all overhead coiling doors is based upon Northwest Door. Subject to compliance with requirements, provide the named product or a comparable product represented by or produced by the companies listed above or per approved substitution.

2.04 SECTIONAL DOORS

A. Sectional Overhead Doors: Model 900 Industrial Steel Door. Northwest Door, Inc.

1. Capable of withstanding positive and negative wind loads of 20 psf, without undue deflection or damage to components.

2. Sections: 2 inches full thickness, 24-gauge roll-formed, hot dip galvanized steel with polystyrene or polyurethane insulation, back covered with high impact polystyrene sheeting.

3. Finish: Galvanized and factory baked on primer and finish coat.

4. Weather Seals: Vinyl bottom, top and side seals, compressible foam seals at section joints.

INFORMATIONAL COPY ONLY - NOT FOR BIDDING

5. Guides: 16-gauge track minimum, galvanized steel.

6. Brackets: Galvanized steel to support counterbalance and track.

7. Manual hand lift operation.

8. Locking: to engage both vertical tracks, with interior lock mechanism.

9. Counterbalance: Torsion type, low stress, helical wound steel spring mounted to steel shaft and drum system. Door opening cables shall be galvanized aircraft cable sized to provide a 5:1 safety factor. Springs to provide a minimum of 10,000 cycles of use.

PART 3 – EXECUTION

3.01 EXAMINATION

A. Verify that opening sizes, tolerances, and conditions are acceptable.

B. Coordinate installation with pre-engineered building supplier.

3.02 INSTALLATION

A. Install units in accordance with manufacturer's instructions.

B. Use anchorage devices to securely fasten assembly to wall construction and building framing without distortion or stress.

C. Securely and rigidly brace components suspended from structure. Secure guides to structural members only.

D. Fit and align assembly including hardware; level and plumb, to provide smooth operation.

E. Coordinate installation of sealants and backing materials at frame perimeter.

F. Install perimeter trim and closures.

3.03 ERECTION TOLERANCES

A. Maintain dimensional tolerances and alignment with adjacent work.

B. Maximum Variation from Plumb: 1/16 inch.

C. Maximum Variation from Level: 1/16 inch.

D. Longitudinal or Diagonal Warp: Plus or minus 1/8 inch per 10 feet straight edge.

INFORMATIONAL COPY ONLY - NOT FOR BIDDING

3.04 TESTING AND ADJUSTING

A. Adjust operating assemblies for smooth and noiseless operation.

B. Each door shall be cycled five times in the presence of the Owner's Representative (or designee).

3.05 CLEANING

A. Clean installed components.

B. Remove temporary labels and visible markings.

END OF SECTION

INFORMATIONAL COPY ONLY - NOT FOR BIDDING

SECTION 08 71 00
DOOR HARDWARE

PART 1 – GENERAL

1.01 SECTION INCLUDES

A. Hardware for insulated hollow metal door assemblies.

B. Thresholds.

C. Weather stripping, seals, and door gaskets.

1.02 REFERENCES

A. ANSI/ICC A117.1 – American National Standard for Accessible and Usable Buildings and Facilities; International Code Council.

B. BHMA A156.1 – American National Standard for Butts and Hinges; Builders Hardware Manufacturers Association, Inc. (ANSI/BHMA A156.1).

C. DHI WDHS.3 – Recommended Locations for Architectural Hardware for Wood Flush Doors; Door and Hardware Institute.

D. NFPA 101 – Code for Safety to Life from Fire in Buildings and Structures; National Fire Protection Association.

1.03 SUBMITTALS

A. Shop Drawings:

1. Indicate locations and mounting heights of each type of hardware, schedules, and catalog cuts.

2. Submit manufacturer's parts lists and templates.

B. Samples:

1. Submit manufacturer's literature of hinge, latchset, lockset, and closer illustrating style, color, and finish.

C. Manufacturer's Installation Instructions: Indicate special procedures, perimeter conditions requiring special attention.

D. Project Record Documents: Record actual locations of concealed equipment, services, and conduit.

E. Maintenance Data: Include data on operating hardware, lubrication requirements, and inspection procedures related to preventative maintenance.

INFORMATIONAL COPY ONLY - NOT FOR BIDDING

F. Keys: Deliver with identifying tags to Owner by security shipment direct from hardware supplier.

G. Warranty: Submit manufacturer's warranty and ensure that forms have been completed in Owner's name and registered with manufacturer.

1.04 QUALITY ASSURANCE

A. Manufacturer Qualifications: Company specializing in manufacturing the products specified in this section with minimum 20 years of documented experience.

B. Hardware Supplier Qualifications: Company specializing in supplying commercial door hardware with 5 years of experience.

1.05 DELIVERY, STORAGE, AND PROTECTION

A. Package hardware items individually; label and identify each package with door opening code to match hardware schedule.

1.06 COORDINATION

A. Coordinate the work with other directly affected sections involving manufacture or fabrication of internal reinforcement for door hardware.

B. Furnish templates for door and frame preparation.

C. Coordinate Owner's keying requirements during the course of the work.

1.07 WARRANTY

A. Provide 5-year warranty for door closers and lock and latchsets.

1.08 MAINTENANCE PRODUCTS

A. Provide special wrenches and tools applicable to each different or special hardware component.

B. Provide maintenance tools and accessories supplied by hardware component manufacturer.

PART 2 – PRODUCTS

2.01 MANUFACTURERS

A. See Part 3.06 Schedule.

INFORMATIONAL COPY ONLY - NOT FOR BIDDING

2.02 GENERAL REQUIREMENTS FOR DOOR HARDWARE PRODUCTS

A. Provide products that comply with the following:

1. Applicable provisions of federal, state, and local codes.

2. ANSI/ICC A117.1, American National Standard for Accessible and Usable Buildings and Facilities.

3. Applicable provisions of NFPA 101, Life Safety Code.

B. Finishes: See Paragraph 3.06 for finishes.

2.03 KEYING

A. Door Locks: Keyed the same.

B. Supply keys in the following quantities:

1. Five change keys for each lock.

PART 3 – EXECUTION

3.01 EXAMINATION

A. Verify that doors and frames are ready to receive work and dimensions are as indicated on shop drawings.

3.02 INSTALLATION

A. Install hardware in accordance with manufacturer's instructions and applicable codes.

B. Use templates provided by hardware item manufacturer.

C. Mounting heights for hardware from finished floor to center line of hardware item: As listed in schedule, unless otherwise noted:

3.03 FIELD QUALITY CONTROL

A. Engineer shall inspect installation and certify that hardware and installation has been furnished and installed in accordance with manufacturer's instructions and as specified.

3.04 ADJUSTING

A. Adjust hardware for smooth operation.

3.05 PROTECTION OF FINISHED WORK

A. Do not permit adjacent work to damage hardware or finish.

INFORMATIONAL COPY ONLY - NOT FOR BIDDING

3.06 SCHEDULE

A. Exterior Doors:

1. Building Entry Door:

a. Butts:

1) Make: Lawrence.

2) Size: 4-1/2 inches by 4-1/2 inches.

3) Quantity: Three per door.

4) Type: BB 4101A, N.R.P.

5) Acceptable Substitution: Stanley, Hager.

b. Deadbolt Lockset:

1) Make: Schlage.

2) Series and Design: Schlage standard cylinder, Model # BA 360 with interior throw knob. Color: 716 (Aged Bronze).

3) Strikes: All locksets and deadbolts shall have box strikes with sufficient strike lip protection to protect door trim. All strikes to have curved lip.

c. Stops and Holders:

1) Make: Builders Brass Works.

2) Type: F9076X.

3) Acceptable Substitution: Glynn-Johnson, CIPCO.

d. Handle and Lockset:

1) Make: Schlage.

2) Series and Design: Model #L9070, 06 style handle with lockset. Color: 626 (Satin Chrome)

e. Door Silencers:

1) Make: Glynn-Johnson.

2) Type: GJ 64.

INFORMATIONAL COPY ONLY NOT FOR BIDDING

f. Threshold:

1) Make: PEMKO.

2) Type: Stainless steel saddle with vinyl thermal break (1/2 inch maximum finished height, ADA compliant).

g. Door Sweep:

1) Make: PEMKO.

2) Type: 321DN Bronze anodized aluminum with black neoprene sweep.

h. Weather Stripping:

1) Make: Contractor's option.

2) Type: Heavy-duty head and jamb weather strip similar to McMaster-Carr No. 1116A22.

2. Office Door:

a. Butts:

1) Make: Lawrence.

2) Size: 4-1/2 inches by 4-1/2 inches.

3) Quantity: Three per door.

4) Type: BB 4101A, N.R.P.

5) Acceptable Substitution: Stanley, Hager.

6) Exterior outswinging door shall have nonremovable pin feature (set screw in barrel; pin nonremovable when door is closed).

b. Deadbolt Lockset:

1) Make: Schlage.

2) Series and Design: Schlage standard cylinder, Model #BA 360 with interior throw knob. Color: 626 (Satin Chrome).

3) Strikes: All locksets and deadbolts shall have box strikes with sufficient strike lip protection to protect door trim. All strikes to have curved lip.

INFORMATIONAL COPY ONLY - NOT FOR BIDDING

c. Stops and Holders:

1) Make: Builders Brass Works.

2) Type: F9076X.

3) Acceptable Substitution: Glynn-Johnson, CIPCO.

d. Handle and Lockset:

1) Make: Schlage.

2) Series and Design: Model #716 handle with lockset. Color: 716 (Aged Bronze).

e. Door Silencers:

1) Make: Glynn-Johnson.

2) Type: GJ 64.

f. Threshold:

1) Make: PEMKO.

2) Type: Stainless steel saddle with vinyl thermal break (1/2 inch maximum finished height, ADA compliant).

g. Door Sweep:

1) Make: PEMKO.

2) Type: 321DN Bronze anodized aluminum with black neoprene sweep.

h. Weather Stripping:

1) Make: Contractor's option.

2) Type: Heavy-duty head and jamb weather strip similar to McMaster-Carr No. 1116A22.

END OF SECTION

INFORMATIONAL COPY ONLY - NOT FOR BIDDING

Division 09

Finishes

INFORMATIONAL COPY ONLY- NOT FOR BIDDING

SECTION 09 21 16
GYPSUM BOARD ASSEMBLIES

PART 1 – GENERAL

1.01 SECTION INCLUDES

A. Gypsum wallboard.

B. Joint treatment and accessories.

1.02 REFERENCES

A. ASTM C36/C36M – Standard Specification for Gypsum Wallboard.

B. ASTM C475/C 475M – Standard Specification for Joint Compound and Joint Tape for Finishing Gypsum Board.

C. ASTM C840 – Standard Specification for Application and Finishing of Gypsum Board.

D. ASTM C1002 – Standard Specification for Steel Self-Piercing Tapping Screws for the Application of Gypsum Panel Products or Metal Plaster Bases to Wood Studs or Steel Studs.

E. ASTM C1396/C1396M – Standard Specification for Gypsum Board.

F. GA-216 – Application and Finishing of Gypsum Board; Gypsum Association.

1.03 SUBMITTALS

A. Product Data: Provide data on gypsum board, accessories, and joint finishing system.

PART 2 – PRODUCTS

2.01 GYPSUM BOARD MATERIALS

A. Gypsum Wallboard: Type X ASTM C1396/C1396M. Sizes to minimize joints in place; ends square cut.

1. Acceptable Product: USG Corporation or approved equal.

2. Thickness: 5/8 inch.

3. Long Edges: Tapered.

INFORMATIONAL COPY ONLY - NOT FOR BIDDING

2.02 ACCESSORIES

A. Reveals and other specialty trim as detailed.

B. Joint Materials: ASTM C475 and as recommended by gypsum board manufacturer for project conditions, including acoustical joint treatment.

C. Screws: ASTM C1002; self-piercing tapping type; cadmium-plated.

PART 3 – EXECUTION

3.01 EXAMINATION

A. Verify that project conditions are appropriate for work of this section to commence.

3.02 GYPSUM BOARD INSTALLATION

A. Comply with ASTM C840. Install to minimize butt end joints, especially in highly visible locations.

B. Single-Layer Non-Rated: Install gypsum board in most economical direction, with ends and edges occurring over firm bearing.

C. Installation on Wood Framing or Plywood Sheathing: For non-rated assemblies, install as follows:

1. Single-Layer Applications: Screw attachment.

3.03 INSTALLATION OF TRIM AND ACCESSORIES

A. Corner Beads: Install at external corners, using longest practical lengths.

B. Edge Trim: Install at locations where gypsum board abuts dissimilar materials.

3.04 JOINT TREATMENT

A. Finish gypsum board in scheduled areas in accordance with levels defined in ASTM C840 and as scheduled below.

B. Level 4 finish shall be achieved using joint compound not using a “paint on” primer type product.

C. Tape, fill, and sand exposed joints, edges, and corners to produce smooth surface ready to receive finishes.

1. Feather coats of joint compound so that camber is maximum 1/32 inch.

INFORMATIONAL COPY ONLY - NOT FOR BIDDING

3.05 TOLERANCES

A. Maximum Variation of Finished Gypsum Board Surface from True Flatness: 1/8 inch in 10 feet in any direction.

3.06 FINISH LEVEL SCHEDULE

A. Level 1: Not Used.

B. Level 2: Utility areas and areas behind cabinetry.

C. Level 3: Not used.

D. Level 4: Walls and ceilings scheduled to receive flat or eggshell paint finish.

E. Level 5: Not Used.

END OF SECTION

INFORMATIONAL COPY ONLY - NOT FOR BIDDING

This Page Intentionally Left Blank

INFORMATIONAL COPY ONLY - NOT FOR BIDDING

SECTION 09 90 00

PAINTING

PART 1 – GENERAL

1.01 SUMMARY

A. This section specifies the surface preparation, painting, and finishing of exposed interior and exterior items and surfaces, including previously painted surfaces, where indicated.

   1. Surface preparation, priming, and finish coats specified in this section are in addition to shop priming and surface treatment specified under other sections.

B. Paint exposed surfaces whether or not colors are designated in schedules, except where a surface or material is specifically indicated not to be painted or is to remain natural. Where an item or surface is not specifically mentioned, paint the same as similar adjacent materials or surfaces. If color or finish is not designated, the Engineer will select from standard colors or finishes available.

   1. Painting includes field painting exposed bare and covered pipes (including color coding), hangers, pipe supports, exposed steel and iron work, and primed metal surfaces of mechanical and electrical equipment.

C. Painting is not required on prefinished items, finished metal surfaces, concealed surfaces, operating parts, and labels.

   1. Unless otherwise specified on the Drawings, prefinished items not to be painted include the following factory-finished components:

      a. Finished mechanical and electrical equipment.

      b. Light fixtures.

      c. Switchgear.

      d. Distribution cabinets.

      e. Submersible pumps.

      f. Flowmeters.

      g. Instrumentation.

      h. Nameplates.

      i. Concrete.

      j. Masonry.

INFORMATIONAL COPY ONLY - NOT FOR BIDDING

D. Finished metal surfaces not to be painted include:

1. Anodized aluminum.

2. Stainless steel.

3. Chromium plate.

E. Operating parts not to be painted include moving parts of operating equipment such as the following:

1. Valve and damper operators.

2. Linkages.

3. Sensing devices.

4. Motor, pump, and fan shafts.

F. Labels: Do not paint over Underwriter's Laboratories, Factory Mutual, or other code-required labels or equipment name, identification, performance rating, or nomenclature plates.

1.02 SUBMITTALS

A. All submittals shall be accordance with Bonney Lake Supplemental Provisions unless otherwise noted.

B. Data Sheets:

1. For each paint system furnish Safety Data Sheets (SDS), the manufacturer's Technical Data Sheets, and paint colors available (where applicable) for each product used in the paint system.

2. Submit required information on a system-by-system basis.

3. Manufacturer's color charts for color selection.

C. Samples:

1. Reference Panel:

a. Unless otherwise specified, before painting work is started, prepare minimum 8-inch by 10-inch samples with type of paint and application specified on similar substrate to which paint is to be applied. Provide color samples for each color tint for each individual system.

b. Furnish additional samples as required until colors, finishes, and textures are approved.

c. Approved samples to be the quality standard for final finishes.

INFORMATIONAL COPY ONLY - NOT FOR BIDDING

D. Quality Control Submittals:

1. Applicator's Qualification: Contractor shall provide a list of five references substantiating experience, including current contact names and phone numbers of each reference for verification.

2. Factory-Applied Coatings:

   a. Manufacturer's certification stating factory-applied coating system meets or exceeds requirements specified.

   b. Current certificate from the coating manufacturer indicating that the applicator is knowledgeable in the product and is qualified to apply the coating system.

   c. Results of Coating Test.

3. Manufacturer's written instructions and special details for applying each type of paint.

1.03 QUALITY ASSURANCE

A. Qualifications:

1. Applicator: Minimum five years of experience in application of specified products.

B. Regulatory Requirements:

1. Meet federal, state, and local requirements limiting the emission of volatile organic compounds.

2. Perform surface preparation and painting in accordance with recommendations of the following:

   a. Paint manufacturer's instructions.

   b. SSPC-PA Guide No. 3, Guide to Safety in Paint Applications.

   c. Federal, state, and local agencies having jurisdiction.

C. Single Source Responsibility: Provide primers and undercoat paint produced by the same manufacturer as the finish coats.

D. Testing of Factory Applied Coating of Ductile Iron Pipe:

1. The film thickness of the coating shall be checked using a magnetic fil thickness. Measurements shall be taken per SSPC PA2 Section 5.1.

2. The coated areas of the pipe shall be tested for pinholes using a 2000 volt pinhole detection test. Any pinholes found shall be repaired prior to shipment.

INFORMATIONAL COPY ONLY - NOT FOR BIDDING

1.04 FACTORY COATING DUCTILE IRON PIPE

A. Pipe Condition: All factory coated pipe shall be delivered to the coating applicator bare.

B. Surface Preparation: The entire surface to be coated shall be abrasive blasted.

C. Coating: After surface preparation and within 8 hours of surface preparation. If any rusting is apparent prior to coating the surface, the entire area must be re-blasted.

1.05 DELIVERY, STORAGE, AND HANDLING

A. Deliver materials to the jobsite in the manufacturer's original, unopened packages and containers bearing manufacturer's name and label and the following information:

1. Product name or title of material.
2. Product description (generic classification or binder type).
3. Federal specification number, if applicable.
4. Manufacturer's stock number and date of manufacture.
5. Contents by volume, for pigment and vehicle constituents.
6. Thinning instructions.
7. Application instructions.
8. Color name and number.
9. SDS, Safety Data Sheets, for all coatings and thinners.

B. Store materials not in use in tightly covered containers in a well-ventilated area at an ambient temperature greater than the minimum temperature recommended by the manufacturer. Maintain containers used in storage in a clean condition, free of foreign materials and residue.

1. Protect materials from freezing. Keep storage area neat and orderly. Remove oily rags and waste daily. Take necessary measures to ensure that workers and work areas are protected from fire and health hazards resulting from handling, mixing, and application.

1.06 JOB CONDITIONS

A. Apply water-based paints only when the temperature of surfaces to be painted and surrounding air temperatures are between 50 degrees F and 90 degrees F, unless otherwise recommended by the paint manufacturer.

B. Apply solvent-thinned paints only when the temperature of surfaces to be painted and surrounding air temperatures are between 45 degrees F (7 degrees C) and 95 degrees F (35 degrees C).

INFORMATIONAL COPY ONLY - NOT FOR BIDDING

C. Do not apply paint in snow, rain, fog, or mist when the relative humidity exceeds 85 percent, at temperatures less than 5 degrees F above the dew point unless specifically allowed by the paint manufacturer, or to damp or wet surfaces.

1. Painting may continue during inclement weather if surfaces and areas to be painted are enclosed and heated within temperature and humidity limits specified by the manufacturer during application and drying periods.

PART 2 – PRODUCTS

2.01 MANUFACTURERS

A. Available Manufacturers:

1. Subject to compliance with requirements, provide paint system products from the following paint manufacturers for this project:

a. Wasser Corporation (Wasser).

b. Tnemec Company, Inc. (Tnemec).

c. The Sherwin-Williams Company (Sherwin-Williams).

d. Approved equal.

2.02 PAINT MATERIALS, GENERAL

A. Material Compatibility: Provide primers, finish-coat materials, and related materials that are compatible with one another and the substrates indicated under conditions of service and application as demonstrated by the manufacturer based on testing and field experience.

B. Material Quality: Provide the manufacturer's best-quality trade-sale paint material of the various coating types specified. Paint-material containers not displaying manufacturer's product identification will not be acceptable.

C. Proprietary Names: Use of manufacturer's proprietary product names to designate colors or materials is not intended to imply that products named are required to be used to the exclusion of equivalent products of other manufacturers. Furnish the manufacturer's material data and certificates of performance for proposed substitutions.

D. Colors: Provide color selections made by the Engineer from the manufacturer's full range of standard colors.

INFORMATIONAL COPY ONLY - NOT FOR BIDDING

PART 3 – EXECUTION

3.01 EXAMINATION

A. Examine substrates and conditions under which painting will be performed for compliance with paint application requirements. Surfaces receiving paint must be thoroughly dry before paint is applied.

   1. Do not begin to apply paint until unsatisfactory conditions have been corrected.

   2. Start of painting will be construed as the applicator's acceptance of surfaces and conditions within a particular area.

B. Coordination of Work:

   1. Review other sections in which primers are provided to ensure compatibility of the total system for various substrates. On request, furnish information on characteristics of finish materials to ensure use of compatible primers.

   2. Notify the Engineer about anticipated problems using the materials specified over substrates primed by others, or over existing coated surfaces that are to be prepared and recoated.

3.02 PREPARATION

A. General: Remove hardware and hardware accessories, plates, machined surfaces, lighting fixtures, and similar items already installed that are not to be painted, or provide surface-applied protection prior to surface preparation and painting. Remove these items, if necessary, to completely paint the items and adjacent surfaces. Following completion of painting operations in each space or area, have items reinstalled by workers skilled in the trades involved.

B. Cleaning: Before applying paint or other surface treatments, clean the substrates of substances that could impair the bond of the various coatings with a quality bio-degradable cleaner and thoroughly rinse with clean water. Allow for complete drying of substrate to be painted. Remove all oil and grease prior to cleaning. Schedule cleaning and painting so that dust and other contaminants from the cleaning process will not fall on wet, newly painted surfaces.

C. Surface Preparation:

   1. Clean and prepare surfaces to be painted according to the manufacturer's instructions for each particular substrate condition and as specified.

   2. Provide barrier coats over incompatible primers and existing coatings, or remove and redo. Notify Engineer in writing about anticipated problems using the specified finish-coat material with substrates primed by others.

INFORMATIONAL COPY ONLY - NOT FOR BIDDING

3. Ferrous Metals:

   a. Clean un-galvanized ferrous-metal surfaces that have not been shop-coated and previously painted metals indicated for painting; remove oil, grease, dirt, loose mill scale, and other foreign substances. Use solvent or mechanical cleaning methods that comply with recommendations of the formerly named Steel Structures Painting Council (SSPC), now called The Society of Protective Coatings.

   b. Touch up bare areas and shop-applied prime coats that have been damaged. Wire-brush, clean with solvents recommended by the paint manufacturer, and touch up with the same primer as the shop coat.

4. Galvanized Surfaces:

   a. Clean galvanized surfaces with nonpetroleum-based solvents so that the surface is free of all oil and surface contaminants.

   b. Remove pretreatment from galvanized sheet metal fabricated from coil stock by mechanical methods.

5. PVC Pipe:

   a. Prepare PVC surfaces in accordance with manufacturer's instructions.

   b. Ensure surfaces are clean, dry, and free of oil, grease, dirt, dust, and other contaminants.

   c. Scarify PVC surfaces to impart a profile and remove all loose particles.

6. Ductile Iron Pipe:

   a. Prepare ductile or cast iron surfaces in accordance with manufacturers' instructions.

   b. Ensure surfaces are clean, dry, and free of oil, grease, dirt, dust, and other contaminants. Provide solvent cleaning per National Association of Pipe Fabricators Standard NAPF 500-03-01. Also, blast all Ductile Iron Pipe in accordance with NAPF 500-03-04/05.

D. Materials Preparation:

1. Carefully mix and prepare paint materials according to manufacturer's directions.

2. Maintain containers used in mixing and applying paint in a clean condition, free of foreign materials and residue.

3. Stir material before application to produce a mixture of uniform density; stir as required during application. Do not stir surface film into material. Remove film and, if necessary, strain material before using.

4. Use only thinners approved by the paint manufacturer and only within recommended limits.

INFORMATIONAL COPY ONLY - NOT FOR BIDDING

E. Tinting:

1. Tint each undercoat a lighter shade to facilitate identification of each coat where multiple coats of the same material are applied.

2. Tint undercoats to match the color of the finish coat, but provide sufficient differences in shade of undercoats to distinguish each separate coat.

3.03 FIELD APPLICATION

A. General:

1. Apply paint according to manufacturer's directions. Use applicators and techniques best suited for substrate and type of material being applied.

2. Do not paint over dirt, rust, scale, grease, moisture, scuffed surfaces, or conditions detrimental to formation of a durable paint film.

3. Provide finish coats that are compatible with primers used.

4. The number of coats and the film thickness required are the same regardless of the application method. Do not apply succeeding coats until the previous coat has cured as recommended by the manufacturer. Sand between applications where sanding is required to produce a smooth, even surface according to the manufacturer's directions.

5. Apply additional coats if undercoats, stains, or other conditions show through final coat of paint until paint film is of uniform finish, color, and appearance. Give special attention to ensure that surfaces, including edges, corners, crevices, welds, and exposed fasteners, receive a dry film thickness equivalent to that of flat surfaces.

6. The term "exposed surfaces" includes areas visible when permanent or built-in fixtures, convector covers, covers for finned-tube radiation, grilles, and similar components are in place. Extend coatings in these areas, as required, to maintain the system integrity and provide desired protection.

7. Paint surfaces behind movable equipment the same as similar exposed surfaces. Before the final installation of equipment, paint surfaces behind permanently fixed equipment with prime coat only.

B. Scheduling Painting:

1. Apply first coat to surfaces that have been cleaned, pretreated, or otherwise prepared for painting as soon as practicable after preparation and before subsequent surface deterioration.

2. Allow sufficient time between successive coats to permit proper drying. Do not recoat until paint has dried to where it feels firm, does not deform or feel sticky under moderate thumb pressure, and where application of another coat of paint does not cause the undercoat to lift or lose adhesion.

INFORMATIONAL COPY ONLY - NOT FOR BIDDING

C. Application Procedures:

1. Apply paints and coatings by brush, roller, spray, or other applicators according to the manufacturer's directions.

   a. Brushes: Use brushes best suited for the material applied.

   b. Rollers: Use rollers of carpet, velvet back, or high-pile sheep's wool as recommended by the manufacturer for the material and texture required.

   c. Spray Equipment: Use airless spray equipment with orifice size as recommended by the manufacturer for the material and texture required.

D. Minimum Coating Thickness: Apply materials no thinner than the manufacturer's recommended spreading rate. Provide the total dry film thickness of the entire system as recommended by the manufacturer and as specified, whichever is greater.

E. Electrical items to be painted include, but are not limited to, the following:

1. Exposed conduit and fittings in occupied spaces.

2. Motors provided without factory-applied coatings.

F. Prime Coats:

1. Before applying finish coats, apply a prime coat of material, as recommended by the manufacturer, to material that is required to be painted or finished and that has not been prime-coated by others.

2. Recoat primed and sealed surfaces where evidence of suction spots or unsealed areas in first coat appears, to ensure a finish coat with no burn-through or other defects due to insufficient sealing.

G. Pigmented (Opaque) Finishes: Completely cover to provide a smooth, opaque surface of uniform finish, color, appearance, and coverage. Cloudiness, spotting, holidays, laps, brush marks, runs, sags, ropiness, or other surface imperfections will not be acceptable.

H. Completed Work:

1. Match approved samples for color, texture, and coverage.

2. Remove, refinish, or repaint work not complying with specified requirements.

3.04 FACTORY COATED DUCTILE IRON PIPE

A. Jobsite Repair: Any areas where damage has occurred due to handling shall be repaired using a touch-up kit provided by the coating manufacturer prior to installation to equal the original coating.

B. Handling: All pipes shall be handled with belt slings and padded forks to avoid damage. All shipping timbers and straps shall be padded when shipping pipe.

INFORMATIONAL COPY ONLY - NOT FOR BIDDING

C. Pipe Condition: All pipe shall be delivered to the coating applicator bare.

D. Surface Preparation: The entire surface to be coated shall be abrasive blasted.

E. Coating of Pipe: After surface preparation and

3.05 CLEANING

A. Cleanup:

1. At the end of each work day, remove empty cans, rags, rubbish, and other discarded paint materials from the site.

2. After completing painting, clean glass and paint-spattered surfaces. Remove spattered paint by washing and scraping. Do not scratch or damage adjacent finished surfaces.

3.06 PROTECTION

A. Protect work of other trades, whether being painted or not, against damage by painting. Protect adjacent walls, floors, and ceilings against splash and overspray. Correct damage by cleaning, repairing or replacing, and repainting. The Contractor shall be solely responsible for costs to repair damages to Owner's property or private property due to splash and overspray.

B. Provide "Wet Paint" signs to protect newly painted finishes. Remove temporary protective wrappings provided by others to protect their work after completing painting operations.

C. At completion of construction activities of other trades, touch up and restore damaged or defaced painted surfaces.

3.07 PAINT SCHEDULE

A. General: Provide the following paint systems for the various substrates indicated. Spreading rate and dry film thickness of each coat of paint (i.e., primer and finish coat) shall be in accordance with the paint manufacturer's requirements. Unless otherwise specified, the following definitions shall apply to the paint systems specified below:

1. Interior: Surfaces located inside of the Building, protected from weather elements.

2. Exterior: Equipment and piping surfaces located outside of the Building exposed to weather elements or inside of below-grade vaults and other below-grade, unconditioned structures.

INFORMATIONAL COPY ONLY - NOT FOR BIDDING

B. Exterior Ferrous Metal: Provide the following finish systems over exterior ferrous metal. Primer is not required on shop-primed items or previously-painted ferrous metals with sound existing coatings.

1. Full-Gloss, Alkyd-Enamel Finish: Two finish coats over a rust-inhibitive primer.

   a. Primer: Rust-inhibitive metal primer applied at spreading rate recommended by the manufacturer to achieve a total dry film thickness of not less than 1.3 mils (0.033 mm).

      1) Fuller: 621-04 Blox-Rust Alkyd Metal Primer.

      2) PPG: 6-208 Speedhide Interior/Exterior Rust Inhibitive Steel Primer.

      3) S-W: Kem Kromik Metal Primer B50N2/50W1.

   b. First and Second Coats: Full-gloss, exterior, alkyd enamel applied at spreading rate recommended by the manufacturer to achieve a total dry film thickness of not less than 3.0 mils (0.076 mm).

      1) Fuller: 312-XX Heavy-Duty Industrial Maintenance Enamel.

      2) PPG: 6-282 Speedhide Interior/Exterior Gloss-Oil Enamel.

      3) S-W: Industrial Enamel B-54 Series.

C. Interior and Exterior Zinc-Coated Metal: Provide the following paint systems, consisting of two finish coats applied over a galvanized metal primer, over all exposed zinc-coated (galvanized) metal piping and equipment surfaces:

1. Surface Preparation: For existing surfaces, power tool cleaning per SSPC SP-3. For new galvanized surfaces, solvent cleaning per SSPC SP-1.

2. Primer:

   a. Tnemec: Series 115 Unibond.

   b. Sherwin-Williams: Galvite HS B50WZ30.

   c. Wasser: MC-Universal Primer 100.

3. First and Second Finish Coats: Shall be full-gloss, exterior, alkyd enamel.

   a. Tnemec: Series 1029 Enduratone.

   b. Sherwin-Williams: Industrial Alkyd Urethane Enamel B54-150 Series.

   c. Wasser: MC-Luster 100.

INFORMATIONAL COPY ONLY - NOT FOR BIDDING

D. Interior Ferrous Metals: Provide the following paint system, consisting of two finish coats applied over a rust-inhibiting primer, on all interior non-galvanized steel piping and equipment surfaces:

1. Surface Preparation: Shall be performed in accordance with SSPC-SP10 standards and paint manufacturer's recommendations.

2. Primer: Synthetic, quick-drying, rust-inhibiting primer.

   a. Tnemec: Series 115 Unibond.

   b. Sherwin-Williams: B50NZ3 Kem Bond HS Universal Metal Primer.

   c. Wasser: MC-Universal Primer 100.

3. First Finish Coat: Interior enamel undercoat.

   a. Tnemec: Series 115 Unibond.

   b. Sherwin-Williams: 6-6 Speedhide Quick-Dry Enamel Undercoater.

   c. Wasser: MC-CR 100.

4. Second Finish Coat: Interior, semi-gloss, odorless, alkyd enamel.

   a. Tnemec: Series 115 Unibond.

   b. Sherwin-Williams: ProMar 200 Alkyd Semi-Gloss Enamel B34 Series.

   c. Wasser: MC-Luster 100.

E. Interior and Exterior Ductile Iron Piping and Valves: Provide the following paint system, consisting of one rust-inhibiting primer and two finish coats, over all exposed ductile iron pipe furnished for this project:

1. Surface Preparation: Shall be performed in accordance with NAPF 500-03-04/05 and paint manufacturer's recommendations.

2. Primer: Polyamide Rust Inhibitive Direct to Metal Epoxy.

   a. Tnemec: Series 161 Epoxoline.

   b. Sherwin-Williams: Macropoxy 646 FC B58-600 Series.

   c. Wasser: MC-Ferroclad 100.

3. First Finish Coat: Polyamide Epoxy.

   a. Tnemec: Series 161 Epoxoline.

   b. Sherwin-Williams: Macropoxy 646 FC B58-600 Series.

   c. Wasser: MC-Luster 100.

INFORMATIONAL COPY ONLY - NOT FOR BIDDING

4. Second Finish Coat: Acrylic, Aliphatic Polyurethane.

    a. Tnemec: Series 73 EnduraShield.

    b. Sherwin-Williams: Acrolon 218 HS B65-650 Series.

    c. Wasser: MC-Luster 1000.

F. Immersed Ductile Iron Pipe: Provide the factory applied paint system below on the exterior surfaces of the ductile iron piping located inside the Lift Station Wet Well: Paint system shall consist of a single coat applied over bare ductile iron pipe.

    a. Surface Preparation: Shall be as directed by the coating manufacturer.

    b. Coating: Coating shall be applied an average of 25 mils (20 mils minimum) over the entire pipe spool. *Exception: spigot end of bell and spigot pipe shall me boated with 6 mils average, 10 mils maximum due to tolerances.*

        1) Induron: Ceramawrap.

G. Interior and Exterior PVC Piping: Provide the following finish system, consisting of two finish coats applied over an acrylic primer, on all exterior PVC piping furnished for this project.

    1. Surface Preparation: Scarify to impart a surface profile and additional surface preparation procedures as recommended by the paint manufacturer.

    2. Acrylic Primer:

        a. Tnemec: Series 115 Unibond.

        b. Sherwin-Williams: DTM Primer/ Finish B66W1.

        c. Wasser: MC-Universal Primer 100.

    3. First and Second Finish Coats: Acrylic Semi-Gloss.

        a. Tnemec: Series 1029 Enduratone.

        b. Sherwin-Williams: Sher-Cryl HPA.

        c. Wasser: MC-Luster 100.

3.08 COLORS

A. Pipe Identification Painting:

    1. Color code all piping except electrical conduit and stainless steel piping. Paint all PVC and metallic fittings and valves the same color as the adjoining piping.

    2. Piping Color Coding: As shown in Table 09 90 00-1.

    3. Pipe Supports: Color of all pipe supports shall be No. 70 light gray as specified in ANSI 359-A-85.

INFORMATIONAL COPY ONLY - NOT FOR BIDDING

B. Colors: Provide as designated herein and as selected by Owner or Engineer. Remaining colors to be determined by Engineer during submittal review.

C. Proprietary identification of colors is for identification only. Selected manufacturer may supply matching colors upon acceptance by the Engineer.

D. Equipment Colors:

1. Equipment includes the machinery or vessel itself plus the structural supports and fasteners and attached electrical conduits.

2. Paint equipment and piping one color as selected.

3. Paint equipment the same color as the piping it serves, except as itemized below:

a. Dangerous Parts of Equipment and Machinery: OSHA Orange.

b. Fire Protection Equipment and Apparatus: OSHA Red.

c. Physical Hazards in Normal Operating Area and Energy Lockout Devices: OSHA Yellow.

d. Safety Equipment, Including, but Not Limited to, Eyewashes and Safety Showers: OSHA Green.

E. Fiberglass reinforced plastic (FRP) grating and ductwork with an integral colored gel coat does not require painting, provided the color is as selected by the Owner.

Table 09 90 00-1. Pipe Service Color Codes

Pipe Service	Color
Drain	Same as pipe service being drained
Raw Sewage	Dark Gray
Sanitary Sewer	Dark Gray
Vent	Same as pipe service being vented
Water – Non Potable	Safety Blue/Black

END OF SECTION

INFORMATIONAL COPY ONLY - NOT FOR BIDDING

Division 13

Special Construction

INFORMATIONAL COPY ONLY- NOT FOR BIDDING

SECTION 13 05 41

SEISMIC RESTRAINT REQUIREMENTS FOR NONSTRUCTURAL COMPONENTS

PART 1 – GENERAL

1.01 SUMMARY

A. This section specifies the anchorage and bracing for equipment and seismic anchoring and bracing for suspended equipment and equipment over 200 pounds.

1.02 QUALITY ASSURANCE

A. Reference Standards: This section incorporates by reference the latest revisions of the following documents. They are a part of this section as specified and modified. In case of conflict between the requirements of this section and those of the listed documents, the requirements of this section shall prevail.

Reference	Title
IBC 2012	International Building Code
ASCE 7-10	Minimum Design Loads for Building Structures

1.03 SUBMITTALS

A. Procedures: Section 01 33 00.

B. List of freestanding equipment weighing 200 pounds or more.

C. Anchorage details for equipment and freestanding items weighing between 200 and 400 pounds.

D. Sway bracing for elevated or suspended items such as ceiling systems, ducting, conduits, cable trays and piping.

E. No less than 4 weeks in advance of equipment installation, for items weighing over 400 pounds. Required anchorage and bracing drawings and calculations bearing the stamp of a Professional Engineer; show the criteria used to determine seismic coefficients and forces applied to the equipment, including seismic zone, soil profile type, and importance factors.

1.04 DESIGN AND PERFORMANCE REQUIREMENTS

A. In accordance with IBC Edition, all equipment shall be anchored and braced to resist seismic forces prescribed in the code and ASCE/SEI 7-10, Chapter 13. All equipment includes equipment which is free standing, supported by stand frames, suspended, anchored to walls, and anchored to floors or slabs.

B. Seismic anchorage and bracing for equipment shall be designed by a State of Washington Registered Structural Engineer using the site-specific seismic criteria.

INFORMATIONAL COPY ONLY - NOT FOR BIDDING

1.05 SITE SEISMIC CRITERIA

A. Short Periods, Sds = 0.40.

B. 1 Second Period, Sd1 = 0.235.

C. Importance Factor, Ip = 1.0.

D. Site Class = D.

E. Occupancy Risk Category: II.

F. Seismic Design Category: D.

G. Response Modification Coefficient and Amplification Factors: In accordance with ASCE/SEI 7-10 Sections 13.5 or 13.6.

PART 2 – PRODUCTS (NOT USED)

PART 3 – EXECUTION (NOT USED)

END OF SECTION

INFORMATIONAL COPY ONLY - NOT FOR BIDDING

SECTION 13 34 19
PRE-ENGINEERED BUILDING

PART 1 – GENERAL

1.01 WORK INCLUDED

A. Design and Drawings.

B. Pre-engineered, shop-fabricated structural steel building frame.

C. Metal walls and sloped roof system, including gutters and downspouts.

D. Coordinate foundation, doors, and other work with building for complete and finished installation.

1.02 REFERENCES

A. American Institute of Steel Construction (AISC):

1. Specification for Structural Steel for Buildings – Allowable Stress Design and Plastic Design.

2. Quality Certification Program, Category MB.

B. American Society for Testing and Materials (ASTM):

1. ASTM A36/A36M, Structural Steel.

2. ASTM A123, Zinc (Hot-Dip Galvanized) Coatings on Iron and Steel Products.

3. ASTM A153, Zinc Coating (Hot-Dip) on Iron and Steel Hardware.

4. ASTM A307, Carbon Steel Bolts and Studs; 60,000 psi Tensile Strength.

5. ASTM A325/A325M, High Strength Bolts for Structural Steel Joints.

6. ASTM A446/A446M, Steel Sheet, Zinc-Coated (Galvanized) by the Hot-Dip Process, Structural (Physical) Quality.

7. ASTM A490/A490M, Heat-Treated Steel Structural Bolts, Classes 150 ksi (135 MPa) Tensile Strength.

8. ASTM A500, Cold-Formed Welded and Seamless Carbon Steel Structural Tubing in Rounds and Shapes.

9. ASTM A501, Hot-Formed Welded and Seamless Carbon Steel Structural Tubing.

10. ASTM A525/A525M, Steel Sheet, Zinc-Coated (Galvanized) by the Hot-Dip Process.

INFORMATIONAL COPY ONLY - NOT FOR BIDDING

11. ASTM A529/A529M, Structural Steel with 42 ksi (290 MPa) Minimum Yield Point (1/2-inch maximum thickness).

12. ASTM A572/A572M, High-Strength Low-Alloy Columbium-Vanadium Steels of Structural Quality.

13. ASTM A792/A792M, Steel Sheet, Aluminum-Zinc Alloy Coated by the Hot-Dip Process.

14. ASTM C1107, Packaged, Dry, Hydraulic-Cement Grout (Nonshrink).

C. American Welding Society:

1. AWS A2.0, Standard Welding Symbols.

2. AWS D1.1, Structural Welding Code – Steel.

D. Metal Building Manufacturers Association (MBMA): Metal Building Systems Manual.

E. Society for Protective Coatings (SSPC): SSPC Painting Manual.

F. Underwriters' Laboratories (UL): Building Materials Directory – Roof Deck Construction.

1.03 REGULATORY REQUIREMENTS

A. Design and construction shall conform to most current, applicable regulations and codes. These regulations and codes include, but are not limited to, those listed below:

1. 2012 International Building Code (IBC), with Washington State and City of Ephrata and Grant County amendments.

2. American Society of Civil Engineers, "Minimum Design Loads for Buildings and Other Structures," ASCE/SEI 7-10.

3. "Specification for the Design, Fabrication and Erection of Structural Steel for Buildings," published by the American Institute of Steel Construction, Inc.

4. "Specification for the Design of Cold-Formed Steel Structural Members," published by the American Iron and Steel Institute.

5. "Structural Welding Code," American Welding Society. All welders shall be certified.

6. SSPC Standards.

7. Washington State Energy Code. Roof and wall insulation shall be provided to meet the requirements of the non-residential portions of the code.

8. OSHA Safety Standards for Steel Erection, 29 CFR Part 1926.

INFORMATIONAL COPY ONLY - NOT FOR BIDDING

B. Comply with listed ratings by the following agencies:

1. Underwriter's Laboratories, Inc.

2. Factory Mutual System.

C. Coordinate with Local Building Department:

1. Obtain building permit.

2. Pay all fees.

3. Coordinate all required inspections.

1.04 SYSTEM DESCRIPTION

A. Bay Spacing: See Drawings.

B. Primary Framing: Rigid frame.

C. Secondary Framing: Purlins, subpurlins, girts, eave struts, flange bracing, sill supports, clips, wind bracing, door, window and louver openings, and other detail items.

D. Wall System: Preformed metal panels, color matched gasketed exposed fasteners, wall girt framing, and accessory components.

E. Roof System: Preformed metal panels with color matched gasketed exposed fastening system, purlin framing assembly, and accessory components.

F. Roof Slope: See Drawings.

1.05 DESIGN REQUIREMENTS

A. Design members to withstand dead load, applicable snow load, and design loads due to pressure and suction of wind calculated in accordance with the current edition of the IBC and ASCE 7-10.

1. Roof Loads:

a. Dead Load: Actual plus 10 psf collateral (superimposed) dead load, applied to roof purlins to accommodate lighting and building insulation.

b. Live Load: 25 psf.

c. Snow Load: 25 psf.

INFORMATIONAL COPY ONLY - NOT FOR BIDDING

2. Wind Loads:

   a. Basic Wind Speed: 110 miles per hour (3-second gust at 33-foot height, ASCE 7-10 strength level).

   b. Site Exposure: Class C. Kzt factor = 1.0.

   c. Importance Factor: 1.0.

3. Seismic Loads:

   a. Seismic Factors: Sds = 0.40, Sd1 = 0.235.

   b. Site Class D.

   c. Importance Factor: 1.0.

4. Combination of Loads:

   a. The combining of dead, live, wind, seismic, and auxiliary loads for design purposes shall be as set forth in the 2012 IBC and ASCE 7-10.

   b. Deflection of purlins and secondary members not to exceed L/180 of its span when supporting applicable vertical, live, dead, and ancillary loads.

B. Occupancy: Group U.

C. Design members, cladding, and fastener systems to withstand UL 580 Uplift Resistance.

D. Permit movement of components without buckling, failure of joint seals, undue stress on fasteners, or other detrimental effects, when subject to temperature range of 100 degrees F.

E. Size and fabricate wall and roof systems free of distortion or defects detrimental to appearance or performance.

F. Provide structural framing to support doors, windows, and other appurtenances.

G. Provide flashing for roof penetrations for plumbing or electrical.

H. Designs utilizing fixed base columns requiring moment resistance in the foundations shall not be allowed. Foundations shown on the Drawings have been designed for the maximum load as noted. Column reactions exceeding these values will require redesign. Contractor shall be responsible for the costs of materials, if required, to increase the foundation capacity at no additional cost to Owner.

1.06 SUBMITTALS FOR REVIEW AND INFORMATION

A. Drawings defining geometry, structural scheme, and major materials.

B. Foundation design information, anchor bolt layouts, and loads.

INFORMATIONAL COPY ONLY - NOT FOR BIDDING

C. Product Data: Provide data on profiles, component dimensions, and fastener systems.

D. Literature fully describing manufacturers' proposed products, accessories, and colors.

E. Special guarantees and warranties as specified.

F. Shop Drawings: Indicate assembly dimensions, locations of structural members, openings, gutters, and loads. Provide panel layout, general construction details, and anchorages and method of anchorage.

G. Complete engineering design calculations, prepared, and stamped and signed by a competent civil or structural engineer licensed by Washington State. Calculations shall demonstrate compliance with regulatory and code requirements applicable to the work. Calculations shall include building loadings, and material installed on or supported by the building, and foundation design criteria, including loads transmitted to foundations.

1.07 SUBMITTALS FOR CLOSEOUT

A. Operation and maintenance data.

B. Warranties and bonds.

C. Project Record Documents: Record actual locations of concealed components and utilities.

1.08 QUALITY ASSURANCE

A. Perform work in accordance with AISC Quality Certification Program, Category MB, and MBMA *Low-Rise Building Systems Manual*.

B. Manufacturer Qualifications: Company specializing in manufacturing the products specified in this section with minimum five years documented experience. Member of Metal Building Manufacturer's Association.

C. Erector Qualifications: Company specializing in performing the work of this section with minimum 5 years of experience and approved by manufacturer.

D. Design structural components, develop shop drawings, and perform shop and site work under direct supervision of a professional structural engineer experienced in design of this work and licensed by Washington State.

1.09 PREINSTALLATION MEETING

A. Convene one week before starting work of this section.

1.10 WARRANTY

A. Provide a 20-year warranty to include coverage for exterior prefinished surfaces to cover prefinished color coat against chipping, cracking, or crazing, blistering, peeling, chalking, or fading. Provide a 10-year warranty for weather tightness of building enclosure elements after installation.

INFORMATIONAL COPY ONLY - NOT FOR BIDDING

PART 2 – PRODUCTS

2.01 BUILDING SYSTEM MANUFACTURERS

A. Butler.

B. Varco-Pruden.

C. Garco Building Systems.

D. Other MBMA member companies.

2.02 MATERIALS – FRAMING

A. Structural Steel Members: ASTM A36/A36M, A529/A529M, A572/A527M, Grade 50, A992.

B. Structural Tubing: ASTM A500, Grade (B), ASTM A501.

C. Plate or Bar Stock: ASTM A529/A529M.

D. Anchor Bolts: ASTM F1554 Grade 36.

E. Bolts, Nuts, and Washers: ASTM A325.

F. Welding Materials: AWS D1.1; type required for materials being welded.

G. Primer: SSPC 20, Red Oxide.

H. Grout: ASTM C1107, nonshrink type, premixed compound consisting of nonmetallic aggregate, cement, water-reducing and plasticizing agents, capable of developing minimum compressive strength of 2,400 psi in 2 days and 7,000 psi in 28 days.

2.03 MATERIALS – WALL AND ROOF SYSTEM

A. Sheet Steel Stock: ASTM A446/A446M galvanized to ASTM A525 (G90).

B. Sheet Steel Stock: ASTM A792 aluminum-zinc alloy, ASTM A792M aluminum-zinc alloy Coating Designation AZ50.

C. Insulation: polypropylene scrim-polyester vapor barrier faced fiberglass, R value to meet Washington State Energy Code, UL flame-spread 25 or less, smoke 50 or less.

D. Joint Seal Gaskets: Manufacturer's standard.

E. Fasteners: Manufacturer's standard, concealed for raised seam roofing system. Manufacturer's standard finish to match adjacent surfaces when exterior exposed on flashing and trim.

F. Bituminous Paint: Asphaltic type.

INFORMATIONAL COPY ONLY - NOT FOR BIDDING

G. Sealant: Manufacturer's standard.

H. Trim, Closure Pieces, Caps, Flashings, and Fascias: Same material, thickness, and finish as exterior sheets; brake formed to required profiles.

2.04 FABRICATION – FRAMING

A. Fabricate members in accordance with AISC specification for plate, bar, tube, or rolled structural shapes.

B. Anchor Bolts: Formed with straight shank, assembled with template for casting into concrete. Unless provided by building supplier, these shall be provided by the Contractor to meet the requirements of the building supplier.

2.05 SHOP FABRICATION – WALL AND ROOF SYSTEMS

A. Siding: Minimum 24-gauge metal thickness, manufacturer's standard profile.

B. Roofing: Minimum 24-gauge metal thickness, manufacturer's standard profile, proprietary standing seam detail. Provide mid-panel striations to prevent "oil canning."

C. Girts/Purlins: Rolled formed structural shape to receive siding and panels. Purlins shall be adequately braced against translation and rolling, and shall not depend on roof panels for stability.

D. Internal and External Corners: Same material thickness and finish as adjacent material.

E. Expansion Joints: Same material and finish as adjacent material.

F. Flashings, Closure Pieces, Fascia, Infills, and Caps: Same material and finish as adjacent material, profile to suit system.

G. Fasteners: To maintain load requirements and weather tight installation, same finish as cladding, noncorrosive.

2.06 FABRICATION – GUTTERS AND DOWNSPOUTS

A. Fabricate of same material and finish as roofing metal.

B. Form sections in maximum possible lengths. Hem exposed edges. Allow for expansion at joints.

C. Fabricate support straps of same material and finish as roofing metal, color as selected.

2.07 FINISHES

A. Framing Members: Clean, prepare, and shop prime to SSPC manual requirements.

B. Exterior Surfaces of Wall Components and Accessories: Factory coated with fluoropolymer finish with minimum 70 percent Kynar 500, color as selected by Owner from manufacturer's standard range.

INFORMATIONAL COPY ONLY - NOT FOR BIDDING

C. Exterior surfaces of roof components and accessories: Factory coated with polyester finish.

D. Interior Surfaces of Wall and Roof Components and Accessories: Factory coated with polyester finish, color as selected by Owner from manufacturer's standard range.

2.08 MATERIAL – WINDOW FRAME AND GLAZING

A. Exterior Window Frames:

1. Pressed steel or extruded aluminum frame, vinyl or plastic frame is not acceptable.

2. Window shall be single-slide opening with no less than 4.8 square feet of openable area.

3. U-factor as required to meet Washington State Energy Code.

B. Exterior Insulated Window Glazing:

1. Exterior Pane:

   a. Two layers of 1/8-inch thickness glass laminated with security film together to form a single pane.

   b. The exterior material is to be clear transparent glass.

2. Airspace:

   a. Argon gas filled.

   b. Nominal Dimension: One-half (1/2) of an inch.

3. Interior Pane:

   a. One layer of 1/4-inch thickness double-strength glass.

   b. Provide low emissivity reflective coating on the surface, to the degree of optical reflectivity selected by the Engineer.

4. Nominal Thickness of Glazing Unit: One inch.

PART 3 – EXECUTION

3.01 EXAMINATION

A. Coordination and Meetings: Verify existing conditions before starting work.

B. Verify that foundation, floor slab, mechanical and electrical utilities, and placed anchors are in correct position.

INFORMATIONAL COPY ONLY - NOT FOR BIDDING

3.02 ERECTION – FRAMING

A. Erect framing in accordance with AISC specification and manufacturer's instructions.

B. Provide for erection and wind loads. Provide temporary bracing to maintain structure plumb and in alignment until completion of erection and installation of permanent bracing.

C. Set column base plates with nonshrink grout to achieve full plate bearing.

D. Do not field cut or alter structural members without approval.

E. After erection, prime welds, abrasions, and incidental surfaces not shop primed.

3.03 ERECTION – WALL AND ROOF SYSTEM

A. Install in accordance with manufacturer's instructions.

B. Exercise care when cutting prefinished material to ensure cuttings do not remain on finish surface.

C. Fasten cladding system to structural supports, aligned, level, and plumb.

D. Locate end laps over supports. Place side laps over bearing.

E. Install sealant and gaskets to prevent weather penetration.

3.04 ERECTION – GUTTER AND DOWNSPOUT

A. Rigidity support and secure components. Joint lengths with formed seams sealed watertight. Flash and seal gutters to downspouts.

B. Apply bituminous paint on surfaces in contact with cementitious materials.

C. Slope gutters for positive draining.

3.05 INSTALLATION – ACCESSORIES

A. Install doorframes, doors, and hardware in accordance with manufacturer's instructions.

B. Seal wall and roof accessories watertight and weather tight.

3.06 TOLERANCES

A. Framing Members: 1/4 inch from level; 1/8 inch from plumb.

3.07 FABRICATION TESTING

A. Complete an air barrier test in accordance with ASTM E779 or approved equal.

1. Test results shall not exceed 0.4 cfm/ft^2 at 0.3 inches wg.

INFORMATIONAL COPY ONLY NOT FOR BIDDING

B. Submit air barrier test report to the authority having jurisdiction after completion of test.

C. If test results exceed 0.4 cfm/ft^2 at 0.3 in. wg, then visually inspect air barrier and seal noted sources of leakage.

1. Submit a follow-up report to the authority having jurisdiction noting corrective measures taken.

END OF SECTION

INFORMATIONAL COPY ONLY - NOT FOR BIDDING

SECTION 13 34 20

PRE-FABRICATED INTERMODAL CONTAINERS

PART 1 – GENERAL

1.01 WORK INCLUDED

A. Two pre-fabricated intermodal containers (containers) for equipment enclosure of the fully operational multi-phase extraction (MPE) remedial system.

   1. Container No. 1 shall contain the Liquid Treatment Train (LTT).

   2. Container No. 2 shall contain the Vapor Treatment Train (VTT).

B. Coordinate foundation and other work with containers for complete and finished installation.

C. Design and Drawings.

1.02 REFERENCES

A. International Organization for Standardization (ISO):

   1. ISO/TC 104, Freight Containers

   2. ISO 668, Freight Containers, Classification Dimensions and Ratings

   3. ISO 830, Freight Containers, Vocabulary

   4. ISO 1161, Series 1 Freight Containers, Corner Fittings, Specification

   5. ISO 1496-1, Series 1 Freight Containers, Specification and Testing, Part 1: General Cargo Containers for General Purpose

   6. ISO 6346, Freight Containers, Coding, Identification and Marking

B. NETA ATS: Acceptance Testing Specifications for Electrical Power Distribution Equipment and Systems, International Electrical Testing Association Inc. (NETA).

C. NEMA MG1: Motors and Generators.

D. International Convention for Safe Containers (CSC).

E. CR Classification Society.

F. This section incorporates by reference the latest revision of the following documents. These references are a part of this section as specified and modified. In case of conflict between the requirements of this section and those of a listed document, the requirements of this section shall prevail.

   1. NFPA 70: National Electric Code (NEC).

INFORMATIONAL COPY ONLY - NOT FOR BIDDING

1.03 REGULATORY REQUIREMENTS

A. Design and construction shall conform to most current, applicable regulations and codes. These regulations and codes include, but are not limited to, those listed below:

   1. Containers shall comply with ISO/TC 104 for Series 1 freight containers.

   2. Containers shall comply with the rules set forth in the CSC requirements and shall be identified with a plate.

   3. Containers shall be certified by the CR Classification Society in design and individually during their construction.

B. Comply with listed ratings by the following agencies:

   1. Underwriter's Laboratories, Inc. (UL).

C. Containers shall be furnished with valid occupancy permits from the State of Washington Department of Labor and Industries (L&I).

D. Coordinate with local Building Department:

   1. Obtain building permit as required for foundations and installation.

   2. Pay all fees for permits not initiated by the Owner.

   3. Coordinate all required inspections.

1.04 SYSTEM DESCRIPTION AND GENERAL REQUIREMENTS

A. General:

   1. The MPE remedial equipment shall be enclosed in two containers installed at the locations indicated on the Drawings.

      a. LTT Container No. 1.

      b. VTT Container No. 2.

   2. The container enclosures, including the MPE remedial treatment trains, shall comprise a complete, commissioned and operational system.

      a. Provide the LTT system in the LTT Container No. 1 in accordance with the Drawings and Section 43 31 10, "Liquid Treatment Train."

      b. Provide the VTT system in the VTT Container No. 2 in accordance with the Drawings and Section 43 31 20, "Vapor Treatment Train."

INFORMATIONAL COPY ONLY - NOT FOR BIDDING

3. The entire container shall be certified and labeled by Underwriters Laboratory (UL), under the appropriate packaged equipment systems category.

4. The Contractor shall ensure that the pre-fabricated containers are furnished with valid occupancy permits from the State of Washington Department of Labor and Industries (L&I).

B. Container Enclosure:

1. Each pre-fabricate intermodal container shall consist of a single, new standard ISO size container.

2. The containers shall include lighting, GFCI receptacles, heating and ventilation appropriately sized for the intended use rated for proper National Electric Code (NEC) Location Rating, or as specified herein.

3. The outside of each container shall be free from rust, dents and have a like new coat of paint on the exterior.

   a. Each container exterior shall be fully primed and epoxy painted/coated.

      1) One gallon of touchup paint shall be provided with each container.

   b. The paint shall be a uniform neutral gray or beige color, or as acceptable to the Owner.

   c. All modifications shall be epoxy primed and finished with a durable semi-gloss finish of uniform consistency.

4. Each container shall be a standard ISO high cube container with dimensions 8 feet wide by 40 feet long by 8.5 feet high.

5. The floor and walls of each container shall provide adequate insulation for operation of the equipment during winter months and for suppression of the equipment operating noise.

6. Each container shall be studded with metal studs and the interior of the enclosure shall be insulated with 1-inch polyurethane foam insulation, framed and finished with 1/2-inch plywood to provide backing for mounting of equipment.

   a. The plywood shall be covered with acoustical panels on the walls to achieve noise requirements.

   b. The interior stud spaces shall be fully insulated throughout.

   c. The Equipment Supplier shall provide a minimum of 20 digital images depicting the installation of the studs, insulation, and plywood.

   d. The plywood shall be finished, sanded smooth, and painted with two coats of a high quality latex paint of a color acceptable to the Owner.

INFORMATIONAL COPY ONLY - NOT FOR BIDDING

7. The interior of the rooms shall have an acoustical insulation and performance level for noise of maximum 70 dB at 20 feet from each container while all equipment is operating.

    a. Documentation of the testing must be provided in writing at the time of system delivery.

8. The inside of the steel skid floor shall utilize hardening foam insulation.

    a. Insulation shall be applied prior to shipping.

9. Finished wood products are not allowed nor are walls allowed to be fabricated from wood studs.

10. Equipment Supplier shall provide high definition images of the enclosure and system assembly.

    a. This shall include all interior wall assemblies, insulation, and equipment installation.

    b. Any concealed components or devices shall be documented to exact locations.

    c. All images shall be provided on portable data storage devices.

11. All enclosure penetrations shall be sealed.

12. Galvanized rain hoods shall be required for all power and passive air vents.

13. The enclosures shall be reinforced to permit lifting using a crane around floor openings.

14. Provide steel mounting tabs welded to the base of the containers with pre-drilled holes required for anchoring the containers once they have been placed on the foundations.

    a. Each container shall be placed on a minimum of eight 24-inch piers for anchoring.

    b. Foundations shall be in accordance with the Drawings.

15. Each container shall be constructed to be handled under the following conditions without distortion or effect on its structural integrity.

    a. Lifting by its top corner by means of spreaders.

    b. Lifting full by its bottom corners by means of fitting at a single angle of 30 degrees.

INFORMATIONAL COPY ONLY - NOT FOR BIDDING

C. Container Room Separation:

1. The VTT Container No. 2 shall be separated into two compartments, as shown on the Drawings.

   a. One compartment shall be the process room where all equipment and apparatuses shall conform to the NEC Class 1 Division 2 requirements for hazardous locations.

   b. One room shall be the control room, and shall contain the master control panel (MCP) and compressed air skid.

      1) The control room shall be unclassified.

   c. VTT Container No. 2 shall have a fully gastight seal between the process and the control rooms.

2. The LTT Container No. 1 shall be one process room as shown on the Drawings.

   a. All equipment and apparatuses in the process room shall conform to the NEC Class 1 Division 2 requirements for hazardous locations.

3. The Equipment Supplier shall install electrical conduits in accordance with applicable codes.

   a. All controls shall be accessible from the access locations.

D. Container Accessibility:

1. Each container shall include standard double end doors and two 36-inch single personnel doors, as shown on the Drawings, for routine maintenance and control access.

   a. All doors shall have a secure locking system.

   b. Personnel doors shall include drip ledge to prevent water from leaking into enclosure.

2. Stair access shall be provided at each personnel door.

3. A partition wall shall separate the process room and the control room of the VTT Container No. 2.

   a. The control room shall be located, at a minimum, within the southeast 5 feet of VTT Container No. 2 and shall contain the electric control panel and the equipment that does not process potentially explosive vapors.

      1) Size control room as required to accommodate equipment and clearances.

   b. Penetrations between the control room and the process room shall be sealed to prevent potentially hazardous vapors from entering the control room.

INFORMATIONAL COPY ONLY - NOT FOR BIDDING

E. Container Conditioned Space:

1. The VTT Container No. 2 control room shall be a conditioned space and shall be heated and cooled with an energy efficient packaged wall mounted air conditioning (AC) unit.

    a. The AC unit shall be designed to operate for dehumidification purposes as well as temperature control.

    b. The AC unit shall be charged and made operable by the Equipment Supplier.

2. The VTT Container No. 2 control room shall have interior lighting using strip LED lighting to provide sufficient light for a conventional working environment.

    a. The light shall be installed on a light switch.

3. The process room of each container shall have a minimum of four Hazardous Location lighting fixtures, each at least 48-inch fluorescent bulb style.

    a. The light shall be installed on a light switch.

4. Each container process room shall be vented with an explosion-proof forced air system complying with the requirements of National Fire Protection Association (NFPA) 497.

    a. Fans shall be Air Movement and Control Association (AMCA) spark resistant Type A or B construction.

    b. Provide a minimum 24-inch fan with proper Occupational Safety and Health Administration (OSHA) safety guards.

    c. Provide a filter housing on each supply air intake.

5. Each container process room shall be heated with an explosion-proof heater to maintain required indoor temperature.

F. Container Secondary Containment:

1. The floor of each container shall serve as secondary containment for the remediation systems.

    a. A leak-proof liner compatible with MPE liquids shall be applied to the floor and walls of each container to create a minimum of 2 inches of containment.

    b. All penetrations shall be leak-proof sealed.

    c. A floor sump shall be installed with a level sensor which shall alarm and shall cause the system to shut down when a leak is detected.

INFORMATIONAL COPY ONLY - NOT FOR BIDDING

1.05 DESIGN REQUIREMENTS

A. Heating, Ventilation and Air Conditioning (HVAC) Design Parameters:

1. Indoor Design Conditions: Design criteria for all spaces shall be in compliance with local codes and the following:

   a. VTT and LTT Process Rooms:

      1) Heating:

         a) Dry Bulb Temperature: 45 degrees F DB.

      2) Spaces shall be served by heating and ventilation equipment for a continuous air exchange rate of 6 air exchanges per hour.

   b. VTT Control Room:

      1) Heating:

         a) Dry Bulb Temperature: 72 degrees F.

         b) Wet Bulb Temperature: 62 degrees F.

      2) Cooling:

         a) Dry Bulb Temperature: 75 degrees F.

         b) Wet Bulb Temperature: 64 degrees F.

      3) Space shall be served by a packaged, wall-mounted AC unit with electric heat.

2. Outdoor Conditions: All equipment shall be sized and systems designed to meet the indoor design conditions under outdoor conditions outlined below.

   a. Heating:

      1) Dry Bulb Temperature: 4 degrees F.

   b. Cooling:

      1) Dry Bulb Temperature: 89 degrees F.

      2) Mean Coincident Wet Bulb Temperature: 61.5 degrees F.

   c. Evaporation:

      1) Wet Bulb Temperature: 63.3 degrees F.

INFORMATIONAL COPY ONLY - NOT FOR BIDDING

d. Dehumidification:

1) Humidity Ratio: 73.5 (grains of moisture per pound of dry air).

2) Dew Point: 56.2 degrees F.

B. Electrical System:

1. General:

a. Contractor's System Design and Integration Responsibilities:

1) The Contractor shall be responsible for the design of a complete Electrical System. The specifications provided in this section are primarily performance-based and do not include all the prescriptive requirements necessary for a fully functional Electrical System. The Contractor is responsible to develop the detailed plans and prescriptive technical specifications necessary for a fully functional Electrical System.

2) The plans and specifications for the Electrical System shall be prepared under the supervision of and sealed by a Washington State Professional Engineer.

b. The electrical Work required for this section shall be in accordance with Division 26 unless otherwise specified in this section.

c. The electrical system shall comply with the following standard(s):

1) UL508A (Industrial Control Panels).

2) UL698a (Industrial Control Panels Relating to Hazardous (Classified) Locations).

3) UL73 (Motor-Operated Equipment).

4) ILHR10 Statement (design criteria for process equipment buildings associated with environmental remediation of UST/AST sites).

5) NFPA30 (Table 5-3.5.3).

6) Article 500 of the NEC.

2. Electrical Power Distribution:

a. General:

1) Provide a complete electrical power distribution system within and between each Container. In general, most of the power distribution equipment for LTT Container No. 1 and VTT Container No. 2 shall be located within the VTT Control Room. Branch circuits for equipment located in the VTT and LTT Process Rooms shall be fed from the power distribution equipment located in the VTT Control Room.

INFORMATIONAL COPY ONLY - NOT FOR BIDDING

2) Power for the LTT/VTT electrical power distribution system shall be supplied from the Main Distribution Panelboard (MDP-1) located in the Office/Storage Building via a 480VAC, 3-phase, 3-wire feeder circuit as shown on the Drawings.

3) Electrical equipment shall be rated for a minimum of 150 percent of the calculated maximum available fault current.

b. The electrical power distribution system for LTT Container No. 1 and VTT Container No. 2 shall include the following primary components. Provide other components not listed below as necessary for a complete electrical power distribution system.

1) Main Circuit Breaker (MCB):

a) The MCB shall serve as the primary disconnect switch for electrical power to the LTT and VTT Containers. The MCB shall receive 480V, 3-phase power from the MDP-1 located in the Office/Storage Building and shall distribute power to the 480V Distribution Panelboard located in the VTT Control Room. When the MCB is open, all power shall be turned off to both the VTT and LTT containers.

b) The MCB shall be sized to accommodate the specified Container loads plus a minimum of 25 percent spare (amperage) capacity.

c) The MCB shall be equipped with a shunt trip circuit. See Flammable Gas/Vapor Detection System in Paragraph 1.05.C.6 for additional requirements associated with this shunt trip circuit.

d) The MCB shall be located on the exterior surface of the VTT adjacent to the doorway entrance to the Control Room. The MCB shall be operable by a person standing on the finished grade. The bottom of the MCB shall be located a minimum of 18 inches above the classified space boundary specified on the Drawings.

e) The MCB shall be service entrance rated and enclosed in a weather protected enclosure with an external operating handle that can be padlocked in the open and closed position.

f) The MCB equipment ground bus shall be bonded to buried grounding electrode/ground ring surrounding the Container.

2) 480V Distribution Panelboard:

a) The 480V Distribution Panelboard shall be sized to accommodate the specified LTT and VTT Container loads plus a minimum of 25 percent spare (amperage) capacity. The panelboard shall be equipped with space for a minimum of two future 3-pole circuit breakers.

b) Shall be located within the VTT Control Room.

c) Shall be equipped with a service entrance rated surge protective device (SPD).

INFORMATIONAL COPY ONLY - NOT FOR BIDDING

3) Lighting Transformer:

a) Shall be located within the VTT Control Room.

b) Sized to accommodate the Lighting Panelboard loads.

c) Three Phase.

4) Lighting Panelboard:

a) Shall be located within the VTT Control Room.

b) Sized to accommodate the 208/120V loads plus a minimum of 25 percent of spare (amperage) capacity. The panelboard shall be equipped with a minimum of four spare 20A 1-pole circuit breakers and space for a minimum of six future 1-pole circuit breakers.

c) Three Phase.

d) Shall be equipped with a SPD.

5) Provide phase monitor relay protection for electrical equipment (e.g., motors) adversely affected by over/under voltage conditions and phase imbalance. The protection shall include: phase loss, phase reversal, under-voltage, over-voltage, and phase imbalance.

3. Raceways:

a. Conduit within the Container shall be galvanized rigid steel (GRS) with conduit bodies, fittings, and boxes suitable for the area classification.

4. Grounding and Bonding:

a. External Ground Bonding Pads: Provide ground bonding pads suitable for exothermic welds (e.g., Cadweld). Locate the bonding pads on the exterior of the Container frame near the bottom of each corner of the Container. The installing Contractor shall bond the Container frame via these ground pads to the ground electrode system as shown on the Drawings.

b. Ground Bus:

1) Provide a 2-inch wide by 1/4-inch thick by 18-inch long copper ground bus in each Container approximately 12 inches above the floor. Locate the ground bus as shown on the Drawings or if not shown on the Drawings then coordinate location with Engineer during submittal review.

2) Bond the ground bus to the Container frame with a #1/0 bare copper ground wire.

3) The installing Contractor shall bond the ground bus to the ground electrode system as shown on the Drawings.

INFORMATIONAL COPY ONLY - NOT FOR BIDDING

c. Bonding:

1) Equipment with electrical components shall be electrically bonded to equipment frames and electrically bonded to the Container.

2) Each conduit shall include an equipment ground conductor sized as required by the NEC. Each conduit shall be electrically bonded to the Container frame.

3) Container doors shall be bonded to the Container frame using a flexible, braided, copper grounding strap.

5. Lightning Protection:

a. Provide a lightning protection system for the VTT and LTT containers. The design shall comply with NFPA 780 and shall include but not be limited to air terminals, conductors, equipment, and container bonding and grounding electrodes.

b. Coordinate the ground electrode requirements with the ground electrodes and ground ring shown surrounding the LTT and VTT containers on the Drawings.

C. Instrumentation and Control System:

1. General:

a. Contractor's System Design and Integration Responsibilities:

1) The Contractor shall be responsible for the design of a complete Instrumentation and Control System. The specifications provided in this section are primarily performance-based and do not include all the prescriptive requirements necessary for a fully functional system. The Contractor is responsible to develop the detailed plans and prescriptive technical specifications necessary for a fully functional Instrumentation and Control System.

2) The plans and specifications for the Instrumentation and Control System shall be prepared under the supervision of and sealed by a Washington State Professional Engineer.

b. The instrumentation and control system shall comply with the following standard(s):

1) UL508A (Industrial Control Panels).

2) UL698a (Industrial Control Panels Relating to Hazardous (Classified) Locations).

3) UL73 (Motor-Operated Equipment).

4) ILHR10 Statement (design criteria for process equipment buildings associated with environmental remediation of UST/AST sites).

INFORMATIONAL COPY ONLY - NOT FOR BIDDING

5) NFPA30 (Table 5-3.5.3).

6) Article 500 of the NEC.

c. The Instrumentation and Control (I&C) system for LTT Container No. 1 and VTT Container No. 2 shall include the following primary components. Provide other components not listed below as necessary for a complete I&C system.

1) MCP.

2) Uninterruptible Power Supply (UPS).

3) Terminal boxes.

4) Field and container Instrumentation.

d. Set Points and Instrument Ranges.

1) Set points are to include:

a) The operating position of discrete sensors such as level, temperature and pressure switches.

b) The point at which an alarm activates based on an analog signal.

c) Control loop set points.

2) Contractor to develop proposed set points and instrument ranges for submittal and review by the Engineer.

3) Set points shall be adjusted as necessary during field testing, startup and system commissioning.

2. Master Control Panel:

a. General:

1) Provide a MCP for the automatic and manual control of processes located in the VTT Container No. 2, LTT Container No. 1, and at the MPE wells.

2) The MCP shall consist of a minimum of two physically isolated compartments or enclosures: one enclosure shall be provided for low power control devices (Low Power Enclosure) and one or more enclosures shall be provided for motor control devices (Motor Control Enclosure).

a) Locate all motor starters and variable frequency drives (VFDs) in the Motor Control Enclosure unless otherwise specified for specific equipment. The use of a motor control center (MCC) or an enclosure with group-mounted motor control devices is permissable. The Motor Control Enclosure shall be equipped with a main disconnect switch which shall be mechanically

INFORMATIONAL COPY ONLY - NOT FOR BIDDING

interlocked with the enclosure door to prevent access to energized equipment.

b) The Low Power Enclosure shall contain only low power devices. The Low Power Enclosure shall not contain circuit conductors operating at more than 120V RMS (nominal) above ground potential and shall not contain power circuits which require arc flash protective clothing if the enclosure door is opened while the equipment within is energized. The Low Power Enclosure shall contain the following types of equipment: graphic terminal, data logging, PLC, intrinsic protection relays/barriers, control relays, pushbuttons, hand switches, pilot lights, and control terminals.

3) The MCP shall be capable of unattended, automatic process control.

4) The MCP shall pre-wired and tested at the factory.

b. Operator Interface:

1) General:

a) The operator interface hardware shall include: a graphic display terminal, discrete control devices (e.g., switches, pushbuttons, and pilot lights) and front panel USB/Ethernet ports for data log file transfer and PLC/Graphic Terminal programming interface.

b) Provide the field wiring, PLC input/output (I/O), instrumentation, and control devices necessary to provide the Operator Interface information specified in this section.

c) The Graphic Terminal graphic screens shall provide a graphical representation of the process similar to what is provided in the Process Flow Diagrams.

d) The Operator Interface information provided in this section represents the minimum requirements. Additional Operator Interface features may be required. Provide additional Operator Interface features as necessary for a fully functional system.

2) Graphic Terminal Status Display Screen(s). The Graphic Terminal shall be programmed to display the following status information:

a) Off/Running/Alarm Status (discrete) and Totalized Runtime (##,###.## hours) shall be displayed for Pumps/Blowers P-101, P-102, P-103, P-201, P-202, and Heat Exchanger W-201.

b) Air Receiver Tank Discharge Pressure, PIT-001A (analog).

c) Air Pressure to MPE Wells, PIT-001B (analog).

d) Air Pressure to LTT, PIT-001C (analog).

INFORMATIONAL COPY ONLY - NOT FOR BIDDING

e) Air Pressure to Condensate Sump, PIT-001D (analog).

f) Knockout Tank Inlet Pressure, PIT-201A (analog).

g) Knockout Tank Outlet Pressure, PIT-201B (analog).

h) Vacuum Assisted Extraction (VAE) Vacuum Pump Discharge Pressure, PIT-201C (analog).

i) Knockout Tank Outlet Pressure, PIT-101A (analog).

j) Sparge Blower Discharge Pressure, PIT-101B (analog).

k) MPE Well Levels, LT-65P1, LT-67P1, and LT-68P1 (analog).

l) MPE Well Vacuum, PIT-65P1, PIT-67P1, and PIT-68P1 (analog).

m) Observation Well Levels, LT-64P1, LT-66P1, LT-69P1, and LT-70P1 (analog).

n) Observation Well Vacuum, PIT-64P1, PIT-66P1, PIT-69P1, and PIT-70P1 (analog).

o) Combined MPE Well Liquid Flow to LTT (flow rate and total accumulated flow), FIT-101 (analog).

p) LTT Effluent Discharge Pressure to Pond, PIT-101 (analog).

q) Vacuum Pump P-202 Suction Flow (flow rate and total accumulated flow), FIT-201 (analog).

3) Graphic Terminal Alarm Display Screen(s). The Graphic Terminal shall be programmed to display the following alarm information:

a) Lower Explosive Limit (LEL) Alarms for: LTT Container No. 1 and VTT Container No. 2.

b) Oxygen Limit Alarms for: LTT Container No. 1 and VTT Container No. 2.

c) Emergency Spill Level Alarms for: LTT Container No. 1 and VTT Container No. 2.

d) Tank High-High Level Alarms for Tanks T-102 (from LSHH-102), T-103 (from LSHH-103), T-104 (from LSHH-104), T-201 (from LSHH-201).

e) Condensate Sump High Level Alarm, LAH-001 derived from LT-001 signal.

f) Tank High Level Alarm for Tank T-104 (from LSH-104).

g) P-202 Blower VFD Fault alarm.

INFORMATIONAL COPY ONLY - NOT FOR BIDDING

h) Knockout Tank T-201 Outlet Pressure High Alarm. PAH-201B derived from PIT-201B signal.

i) Vacuum Pump P-202 Discharge Pressure High Alarm, PSH-201.

j) Vacuum Pump P-202 Discharge Temperature High Alarm, TSH-201.

k) Surge Blower P-103 Discharge Temperature High Alarm, TSH-101.

l) Knockout Tank T-105 Outlet Pressure High Alarm. PAH-101A derived from PIT-101A signal.

m) Air Receiver Tank Discharge Pressure Low Alarm, PAL-001A via PIT-001A.

n) Air Pressure to MPE Wells Low Alarm, PAL-001B via PIT-001B.

o) Air Pressure to OWS Pump Low Alarm, PAL-001C via PIT-001C.

p) Air Pressure to Condensate Sump Low Alarm, PAL-001D via PIT-001D.

q) HOA Switch Not-in-Auto Alarm. Each HOA switch shall be monitored for a Not-in-Auto condition.

r) Motor Overload Alarm. Monitor each motor starter overload relay for overload condition.

s) Uninterruptable Power Supply (UPS) Trouble Alarm.

4) Graphic Terminal Set Point Screen(s). The Graphic Terminal shall be programmed to display and modify the following set point information:

a) Pressure control set points.

b) Alarm set points.

5) Graphic Terminal Control:

a) Hand-Off-Auto control for each process.

b) Alarm acknowledge, silence, reset.

6) Discrete Control Devices (e.g., pilot lights, pushbuttons, HOAs) as necessary.

INFORMATIONAL COPY ONLY - NOT FOR BIDDING

c. Data Logging Function:

1) Automatically log the following information:

a) The value for each status point displayed on the Graphic Terminal Status Display Screen.

b) The value for each alarm point displayed on the Graphic Terminal Alarm Display Screen.

c) The value for each set point displayed on the Graphic Terminal Set Point Screen.

d) The value for PLC I/O point.

e) Provide a timestamp for each recorded value.

f) Time Interval: Log each value once per minute.

2) Provide a minimum 35-day data storage capacity but no less than 512GB of storage.

3) Logged data shall be automatically stored on a removable, non-volatile, data storage media such as a flash memory card.

a) The operator shall be able to remove this memory card at any time for remote examination and analysis.

b) The operator shall be able to replace the memory card with a second memory card without impacting the data logging function. Data logging shall automatically continue on the replacement memory card.

c) Provide two memory cards. The first card is to be installed in the MCP. The second card is to be delivered to the Owner.

4) Data logging shall be performed on a first-in first-out (FIFO) basis when the removable media capacity is exceeded (i.e., the oldest data shall be replaced by the newest data).

5) Data shall be organized in files on the removable media.

a) Each file shall include all the data for a single day.

b) The file name shall be the name of the transit station and year-month-day information.

c) The file shall use a comma-separated-values (CSV) format which can be imported into an Excel spreadsheet.

INFORMATIONAL COPY ONLY - NOT FOR BIDDING

6) Provide an Excel spreadsheet template which shall import the CSV files created on the removable media.

   a) Each row of the spreadsheet shall be organized to represent all the data logged with the same timestamp.

   b) Each column shall represent the value of a specific data point (e.g., Oil Waste Drum High High Level Alarm [LAHH-103]).

d. Signal Interface for transducers located at the MPE wells and the monitoring wells:

   1) Each MPE well and each monitoring well shall be equipped with two analog (4-20ma), loop-powered transducers.

   2) The MCP shall provide an intrinsic safety barrier for each analog signal.

   3) The design documents shall include voltage drop calculations for the analog current loops and calculations demonstrating that the circuit requirements (such as capacitance) of the intrinsic safety barrier has been met for each control loop.

   4) Provide spare capacity for two additional wells.

e. PLC:

   1) Sequencing logic.

f. UPS/Surge Suppressor:

   1) Instrumentation and control power shall be derived from an UPS source. This requirement applies to both AC and DC control power. The UPS shall be equipped with a bypass switch for maintenance purposes. The bypass switch shall allow the instrument and control system to operate when the UPS is offline.

   2) The UPS shall be equipped with a loss of utility power contact and a UPS trouble contact which shall be monitored by the PLC.

   3) A surge suppressor shall be provided to protect the line side of the UPS from voltage transients. Provide surge suppressor protection as necessary for other circuits which are sensitive to voltage transients and are not supplied by the UPS.

g. Motor Control:

   1) 480V isolated or separate enclosure.

INFORMATIONAL COPY ONLY - NOT FOR BIDDING

h. MCP Control Strategies:

1) General:

a) The control system shall be capable of unattended, automatic process control.

b) The control system shall operate VTT equipment as necessary to maintain the package vacuum pressure as set by the operator and downstream vapor treatment.

c) The control system shall operate LTT equipment as necessary to maintain functional liquid levels as set by the operator and downstream liquid treatment.

d) The PLC shall coordinate operational input signals including the desired system set point pressure, closed loop transducer feedback, and alarm monitoring.

2) MPE Well Pneumatic Pumps (P-401, P-402, and P-403):

a) The submersible, pneumatic MPE well pumps (one pump per MPE well) shall be driven by air supplied from Compressor C1 via SV-001.

b) SV-001 shall be controlled by the MCP. SV-001 shall be configured as energized to open and de-energized to closed. When SV-001 is closed (de-energized), it shall vent the MPE well pump air line to atmosphere. If a tank high-high level alarm occurs for T-102 (LSHH-102), T-103 (LSHH-103), T-104 (LSHH-104), or T-201 (LSHH-201), then SV-001 shall close thereby stopping all MPE well pumps. If a high level is detected in either the LTT or VTT secondary containment sump, then SV-001 shall close thereby stopping all MPE well pumps.

c) The MPE well pumps shall not be allowed to run unless the VAE Vacuum Pump (P-202) is running.

d) The MPE well pumps shall not be allowed to run unless the Sparge Blower (P-103) is running.

e) No run status feedback shall be provided from individual MPE well pumps to the MCP.

3) Compressor (C-1):

a) The compressor shall be equipped with a local control panel that includes the compressor motor starter, compressor air pressure control logic, and a local compressor HOA control switch.

b) The MCP shall provide a run interlock (dry contact) to the compressor local control panel. This run interlock shall shutdown the compressor when a

INFORMATIONAL COPY ONLY - NOT FOR BIDDING

tank high-high level occurs for T-102 (LSHH-102), T-103 (LSHH-103), T-104 (LSHH-104), or T-201 (LSHH-201). The run interlock shall be limited to compressor's automatic mode of operation (i.e., when HOA switch is in the automatic position only).

4) Air Sparge Tank (T-102) and Effluent Pump (P-101):

   a) The Air Sparge Tank and Effluent Pump are mounted on a common skid which includes a local HOA switch for the Effluent Pump and level switches for the Air Sparge Tank. The Effluent Pump motor starter shall be located in the MCP.

   b) When the HOA switch is in the automatic position, the Effluent Pump shall be controlled in a draw/fill manner by LSH-102 and LSL-102. Run signal monitored by MCP.

   c) When the HOA switch is in the hand position, the MCP shall cause the Effluent Pump motor to run continuously. The hand mode of control shall be independent of the PLC but the PLC shall continue to monitor status and alarm information.

   d) Respond as specified in the MCP Control Strategy for compressor and the MPE Well Pneumatic Pumps, paragraphs 1.05 C.2.h.2 and C.2.h.3, when an Air Sparge Tank high-high level alarm (LSHH-102) occurs.

   e) Reference the Operator Interface and Data Logging Function, paragraphs 1.05 C.2.b and C.2.c, for related requirements.

5) Sparge Blower (P-103):

   a) The Sparge Blower skid includes a local HOA switch for the Sparge Blower. The Sparge Blower motor starter shall be located in the MCP.

   b) When the HOA switch is in the automatic position, the Sparge Blower shall run when SV-001 (compressor air) is open thereby supplying air to the Air Sparge Tank (T-102). The Sparge Blower shall shutdown if SV-001 closes. Run signal monitored by the MCP.

   c) When the HOA switch is in the hand position, the MCP shall cause the Sparge Blower motor to run continuously. The hand mode of control shall be independent of the PLC but the PLC shall continue to monitor status and alarm information.

   d) When the HOA switch is in the automatic position, the Sparge Blower shall shut down when a high temperature (TSH-101) is detected.

   e) Reference the Operator Interface and Data Logging Function, paragraphs 1.05 C.2.b and C.2.c, for related requirements.

INFORMATIONAL COPY ONLY - NOT FOR BIDDING

6) Oil Waste Drum (T-103) and OWS Pump (P-102):

   a) The Oil Waste Drum and OWS Pump are mounted on a common skid which includes a local H-O-A switch for the OWS Pump, solenoid valve (SV-102), and level switches for the Oil Waste Drum. Air for the pneumatic OWS motor shall be controlled by the solenoid valve (SV-102).

   b) When the HOA switch is in the automatic position, the OWS Pump shall be controlled in a draw/fill manner by LSH-103 and LSL-103. The OWS Pump shall also be interlocked with LSHH-104 such that a high level in T-104 shall prevent the OWS Pump from running. Run signal monitored by the MCP.

   c) When the HOA switch is in the hand position, the MCP shall cause the OWS Pump motor to run continuously. The hand mode of control shall be independent of the PLC but the PLC shall continue to monitor status and alarm information.

   d) Respond as specified in the MCP Control Strategy for Compressor and the MPE Well Pneumatic Pumps, paragraphs 1.05 C.2.h.2 and C.2.h.3, when an Oil Waste Drum high-high level alarm (LSHH-103) occurs.

   e) Reference the Operator Interface and Data Logging Function, paragraphs 1.05 C.2.b and C.2.c, for related requirements.

7) Waste Collection Tank (T-104):

   a) Respond as specified in the MCP Control Strategy for Compressor and the MPE Well Pneumatic Pumps and OWS Pump, paragraphs 1.05 C.2.h.2, C.2.h.3 and C.2.h.6, when an Waste Collection high-high level alarm (LSHH-104) occurs.

   b) Provide a high level alarm (LSH-104).

8) Knockout Tank (T-201) and Knockout Tank Transfer Pump (P-201):

   a) The Knockout Tank and Knockout Tank Transfer Pump are mounted on a common skid which includes a local HOA switch for the Knockout Tank Transfer Pump and level switches for the Knockout Tank. The Knockout Tank Transfer motor starter shall be located in the MCP.

   b) When the HOA switch is in the automatic position, the Knockout Tank Transfer Pump shall be controlled in a draw/fill manner by LSH-201 and LSL-201. Run signal monitored by the MCP.

   c) When the HOA switch is in the hand position, the MCP shall cause the Knockout Tank Transfer Pump motor to run continuously. The hand mode of control shall be independent of the PLC but the PLC shall continue to monitor status and alarm information.

INFORMATIONAL COPY ONLY - NOT FOR BIDDING

d) Respond as specified in the MCP Control Strategy for Compressor and the MPE Well Pneumatic Pumps, paragraphs 1.05 C.2.h.2 and C.2.h.3, when an Knockout Tank high-high level alarm (LSHH-201) occurs.

e) Reference the Operator Interface and Data Logging Function, paragraphs 1.05 C.2.b and C.2.c, for related requirements.

9) VAE Vacuum Pump (P-202):

a) The VAE Vacuum Pump skid includes a local HOA switch for pump control. The VAE Vacuum Pump motor is controlled by a VFD which is located in the MCP.

b) When the HOA switch is in the automatic position, the MCP shall monitor the PIT-201A pressure signal and vary the VAE Vacuum Pump motor speed (via VFD) as necessary to maintain the operator-entered pressure set point. Automatic pump motor speed control shall be provided by a PLC based proportional-integral-derivative (PID) control loop.

c) When the HOA switch is in the hand position, the MCP shall cause the VAE Vacuum Pump motor to run at a constant speed which has been programmed into the VFD. The value of this constant speed mode shall be determined at startup in consultation with the Engineer. The VFD shall include a front panel human machine interface (HMI) that shall allow VFD status to be monitored and VFD parameters modified without the need to open the Power Enclosure. The hand mode of control shall be independent of the PLC, but the PLC shall continue to monitor status and alarm information.

d) VAE Vacuum Pump motor speed (VFD frequency), VFD run status, and VFD fault status shall be monitored by the MCP.

e) When the HOA switch is in the automatic position, the VAE Vacuum Pump shall shutdown when a high temperature (TSH-201) or high pressure (PSH-201) or high-high level (LSHH-201) is detected.

f) Reference the Operator Interface and Data Logging Function, paragraphs 1.05 C.2.b and C.2.c, for related requirements.

10) Heat Exchanger (W-201):

a) The Heat Exchanger skid includes a local HOA switch for the Heat Exchanger Fan. The Heat Exchanger Fan motor starter shall be located in the MCP.

b) When the HOA switch is in the automatic position, the Heat Exchanger Fan shall be controlled to run continuously. Automatic mode may be modified during startup to include other control criteria. Run signal monitored by the MCP.

c) When the HOA switch is in the hand position, the MCP shall cause the Heat Exchanger Fan motor to run continuously. The hand mode of control shall

INFORMATIONAL COPY ONLY - NOT FOR BIDDING

be independent of the PLC but the PLC shall continue to monitor status and alarm information.

d) The condensate drain solenoid valve (SV-201) shall be equipped with an integral timer that shall automatically drain the Heat Exchanger at operator defined time intervals.

e) Reference the Operator Interface and Data Logging Function, paragraphs 1.05 C.2.b and C.2.c,for related requirements.

11) Startup Control Sequences:

a) The operator shall be responsible for the sequential startup procedures for process equipment.

b) Process equipment (e.g., pumps, motors, blowers, compressors) shall shutdown during a power outage. Following a power outage, the process equipment shall remain shutdown until an operator arrives and restarts the system.

c) The container HVAC system shall start automatically following a power outage.

12) Shutdown Control Sequences:

a) The operator shall be responsible for the sequential shutdown procedures for process equipment.

3. Programming and Configuration Services:

a. Provide programming and configuration services for each device requiring programming and configuration.

4. Emergency Stop Pushbuttons: Provide an emergency stop pushbutton at the entry to each VTT and LTT personnel door and on the MCP. The emergency stop shall shutdown the treatment process. The emergency stop shall not affect the operation of the HVAC system.

5. Ventilation Monitoring and Signaling System:

a. Provide a method to continuously monitor the ventilation system to verify that the appropriate minimum ventilation flow rate is being met for classified locations.

b. Provide a dual light “Go/No-Go” signaling system on the exterior of each entry door indicating whether entry into the classified space is permitted based on ventilation.

INFORMATIONAL COPY ONLY - NOT FOR BIDDING

6. Provide a Flammable Gas/Vapor Detection System and an Oxygen Monitoring System:

    a. Provide a method to continuously monitor the air within each enclosed space for the presence of flammable gases or vapors (LEL criteria) and for the presence of minimum acceptable oxygen levels for human occupancy.

    b. Provide a visual signaling system on the exterior of each personnel door indicating whether entry into the space is permitted based on flammable gas/vapor and oxygen measurements. The visual signaling system shall include a strobe style visual indicator for alarm conditions.

    c. When a LEL alarm is received, the LEL alarm circuit shall shunt trip the 480V MCB thereby removing power from the VTT and LTT.

    d. Power for the Flammable Gas/Vapor Detection and Oxygen Monitoring Systems shall be supplied from a dedicated UPS. The UPS shall:

        1) Provide power to the Flammable Gas/Vapor Detection and Oxygen Monitoring instruments, associated visual signaling system, and MCB shunt trip circuit.

        2) Provide a minimum of 72 hours of backup power capacity.

7. Provide an external annunciator strobe light for system alarms. Location to be coordinated with the Owner.

8. Raceways:

    a. Conduit within the Container shall be galvanized rigid steel (GRS) with conduit bodies, fittings, and boxes suitable for the area classification.

    b. Power, control, and signal wiring shall be separated as follows:

        1) Signal wiring such as analog 4-20ma and analog voltage signals shall be run in a dedicated conduit and shall not share this conduit with power and/or control wiring.

        2) Discrete control wiring including 24Vdc and 120Vac voltages shall be run in a dedicated conduit unless functionally related to a power circuit (e.g., motor control) in which case the wiring may be routed with the power circuit where allowed by the NEC. 24Vdc control circuits shall be separated from 120Vac control circuits and power circuits where subject to interference which could adversely affect the control signal.

1.06 COORDINATION OF WORK

A. The Contractor shall coordinate the work of the Equipment Supplier with the work of other trades in order to ensure a complete, functioning remediation system, including mechanical and electrical site systems.

INFORMATIONAL COPY ONLY - NOT FOR BIDDING

1.07 SUBMITTALS

A. Submittals shall be in accordance with Section 01 33 00, “Submittal Procedures.”

B. Shop Drawings and Product Data:

1. Product Data: Submit product data for all materials, equipment and products installed in the Work.

2. Shop Drawings: Submit detailed container drawings, including floor plans with anchoring tabs showing the layout of mechanical and electrical equipment and panels, container sections (lateral and longitudinal), interior elevations, exterior elevations and roof plan.

3. Utility Coordination Drawings: Submit detailed drawings showing two unique reference points for each container, and a set of offsets for each utility (mechanical, plumbing or electrical) entrance through the containers.

4. Delivery and Installation Plan: submit detailed, sequential written narrative describing the procedures required for delivery, placement and commissioning of the containers and container systems.

   a. Provide scale drawings depicting arrangement of cranes and other equipment required to set the containers in place.

5. Submit documentation of successful inspection by L&I under WAC 296-46B-010 – Inspection Move-on Buildings and Structures.

6. Submit factory, assembly and installation test reports for the electrical equipment, panels and devices installed in the building.

7. Submit complete engineering design calculations, prepared, and stamped and signed by a competent engineer licensed by Washington State.

   a. Calculations shall demonstrate compliance with regulatory and code requirements applicable to the work. Calculations shall include:

      1) Container loadings, and material installed on, or supported by, the containers.

C. Electrical Design Submittals:

1. Submit electrical design plans and specifications prepared by a Washington State Professional Engineer for favorable review prior to fabrication of the VTT and LTT containers.

2. Submit estimated total 480Vac electrical load for the VTT and LTT containers no later than 30 days following the NTP. This estimate will be used to verify that the electrical service, Main Circuit Breaker (MCB-1), Main Distribution Panelboard (MDP-1) located in the Office/Storage Building and feeder are appropriately sized.

3. Submit the Short Circuit, Coordination, and Arc Flash Report specified in the Division 26 Specifications with the submittal of the electrical design plans and

INFORMATIONAL COPY ONLY - NOT FOR BIDDING

specifications. The scope of this report shall include, but not be limited to, electrical equipment located within the VTT and LTT enclosures including the 480V power distribution system, MCP, and 480V disconnect switches.

4. Electrical one-line diagram and load calculations.

5. Container electrical nameplate information. Includes, but is not limited to:

   a. Container full load amps (FLA).

   b. Short circuit withstand and interrupt rating.

6. Connection diagrams for external power and ground connections.

D. Instrumentation and Control System Design Submittals:

1. Submit instrumentation and control system design plans and specifications prepared by a Washington State Professional Engineer for favorable review prior to fabrication of the VTT and LTT containers.

2. Connection diagrams for external instrumentation and control connections.

3. Provide electronic and hardcopy of program and configuration files for each programmable and configurable device.

4. Submit graphic images of each Graphic Terminal screen.

E. Quality Control Submittals:

1. Equipment Supplier's Qualifications: Provide complete information demonstrating that the Equipment Supplier meets the minimum standards required by this section.

2. Equipment Supplier's Quality Assurance and Control Plan.

3. Equipment Supplier's written plan for assuring and documenting that the containers meet the Equipment Supplier's quality standards and the requirements of the Contract Documents.

4. Contractor's Installation and Commissioning Quality Assurance and Control Plan.

5. Contractor's written plan for assuring and documenting that the containers shall be installed, completed and commissioned in accordance with the Equipment Supplier's quality standards and the requirements of the Contract Documents.

   a. Clearly identify all elements of the Work that the Contractor proposes to install or complete once the containers have been delivered to the project site.

6. Provide a minimum of 20 digital images depicting the installation of the studs, insulation, and plywood and other concealed components.

7. Certification that the containers comply with ISO, CSC, CR Classification Society and UL requirements.

INFORMATIONAL COPY ONLY - NOT FOR BIDDING

F. Factory Acceptance Test Plan and Results Submittals.

G. Field Testing Plan and Results Submittals.

H. Closeout Submittals:

1. Warranty.

2. Operations and Maintenance (O&M) Data.

3. O&M materials for electrical work in accordance with Division 26.

4. O&M information for panels, equipment and devices installed including product data.

5. Final reviewed submittals; As-built drawings, factory and field tests included in the O&M data.

1.08 QUALITY CONTROL

A. Equipment Supplier's Qualifications: Company specializing in manufacturing the products specified in this section with minimum five years documented experience.

B. Develop shop drawings, and perform shop and site work under direct supervision of a professional engineer experienced in design of this work and licensed by Washington State.

C. All areas of facility, where the system or parts thereof, are being manufactured or stored under this Specification, shall be available for inspection by Engineer and Owner during normal working hours.

1.09 PREINSTALLATION MEETING

A. Convene one week prior to beginning work of this section.

1.10 WARRANTY

A. Provide a one (1) year warranty for each container enclosure, including weather tightness of enclosure elements after installation.

1. Warranty shall include coverage for exterior prefinished surfaces to cover prefinished color coat against chipping, cracking, or crazing, blistering, peeling, chalking, or fading.

PART 2 – PRODUCTS

2.01 EQUIPMENT SUPPLIER

A. Equipment Supplier shall be in accordance with Section 43 31 20, "Vapor Treatment Train."

INFORMATIONAL COPY ONLY - NOT FOR BIDDING

2.02 MATERIALS

A. Container:

1. Container shall be wind and water tight constructed with steel frames, corrugated panels welded by CO_2 shielded Arc welding.

   a. Exterior welds, including base frames, shall be continuous with full penetration.

2. Container shall accommodate required pipe supports and equipment anchoring. All motorized equipment shall be anchored.

3. All crevices shall be sealed with elastic sealing compound.

4. Containers shall be ISO, CSC, CR Classification and UL certified.

5. Manufacturer/Model:

   a. Seneca Companies – Model DN-HC-40.

   b. Or Approved Equal.

B. Walls and Roof System:

1. Walls shall be continuously welded to each other and to the end rails and corner posts.

   a. Welding penetration of side panels to rails shall be a minimum 75 percent.

2. Roof shall be constructed by several die-stamp corrugated steel sheets with a curtain upwards chamber at the center of each trough and corrugation.

   a. Butt joint sheets together to form one (1) panel by automatic welding.

3. Exterior siding and roof shall be 14 gauge corrugated steel.

4. Interior system shall include 1 inch polyurethane foam enclosed by 1/2-inch plywood and acoustical panels.

C. Double Door End Frames:

1. End frames shall consist of one (1) door header, one (1) door sill, four (4) corner fittings and two (2) corner posts.

2. Double doors shall be 14 gauge, cam locking steel doors.

D. Floor System:

1. Base structure shall be composed of two (2) bottom side rails, cross-members, one (1) pair of forklift pockets.

   a. Components shall be welded together as a subassembly.

INFORMATIONAL COPY ONLY - NOT FOR BIDDING

2. Flooring shall be 1-1/8-inch marine wood over 6 inches of spray foam between the steel skid floor frame.

    a. Flooring shall be fixed to the cross members by self-tapping screws.

    b. Spray foam shall be Icynene, or approved equal.

3. Floor shall be coated with a minimum 1/8 inch thick liner coating.

    a. Coating shall continuously cover entire floor area, including sump and containment berms at doorways, extending a minimum 6 inches up walls, partitions and doors.

    b. Coating shall be compatible with MPE liquids as shown in Table 1 of Section 43 31 10, "Liquid Treatment Train."

4. Flooring shall provide secondary spill containment.

    a. Provide 4-inch steel sump below the floor surface.

        1) Provide emergency spill levels switch and alarm to shut down system when activated.

    b. Provide 2-inch angle iron across doorways as containment sills.

2.03 MOTORS

A. Motors shall be UL Listed.

B. Motors shall be rated for premium energy efficiency and shall comply with the Washington State Energy Code.

C. All motors installed in a hazardous location shall be listed for use in the hazardous location and shall be provided with a factory nameplate identifying the Class, Division, and Group for which the listing applies.

D. VFD rated motors. Motors which are controlled by VFDs shall be rated for operation with a variable frequency drive per NEMA MG1, Part 31. The motor nameplate and the submittal data shall state that the motor is rated per NEMA MG1, Part 31 for VFD operation.

2.04 HVAC

A. Ducting shall be installed with the enclosure and shall be galvanized and lined with sound foam.

2.05 ELECTRICAL

A. The specifications provided in this section are primarily performance-based and do not include all the devices and all the prescriptive requirements necessary for a fully functional Electrical System. The Contractor is responsible to develop the detailed prescriptive technical specifications necessary to specify a fully functional Electrical System and to construct a fully functional Electrical System.

INFORMATIONAL COPY ONLY - NOT FOR BIDDING

B. Conduit shall be GRS in accordance to NEC Code for Class 1, Division 2 Hazardous Locations.

C. Surge Protective Device shall be in accordance with Section 26 43 00, “Surge Protective Devices.”

D. Variable Frequency Drives:

1. The VFDs shall be solid state, with a pulse width modulated (PWM) output.

2. Six-pulse type with line side and load side reactors.

3. UL Listed.

4. Efficiency: Drive efficiency shall be 97 percent or better at full speed and full load.

5. Fundamental power factor shall be 0.98 at all speeds and loads.

6. Equipped with Operator Interface for remote front MCP mounting.

7. The VFD shall have the ability to automatically restart after an overcurrent, overvoltage, undervoltage, or loss of input signal protective trip. The number of restart attempts, trial time, and time between reset attempts shall be programmable.

8. The VFD shall be capable of starting into a rotating load (forward or reverse) and accelerate or decelerate to set point without safety tripping or component damage (flying start).

9. The VFD shall be equipped with an automatic extended control power loss ride-through circuit which shall utilize the inertia of the load to keep the drive powered.

   a. Minimum power loss ride-through shall be one-cycle, based on full load and no inertia.

   b. Removing power from the motor is not an acceptable method of increasing power loss ride-through.

10. The drive shall employ current limit circuits to provide trip-free operation.

11. The VFD shall be equipped with two (2) programmable critical frequency lockout ranges to prevent the VFD from operating the load continuously at an unstable speed.

12. Two independently adjustable accel and decel ramps. These ramp times shall be adjustable from 1 to 1,800 seconds.

13. VFD Protection Circuits: Overcurrent, overvoltage, undervoltage, overtemperature, ground fault, motor overload.

INFORMATIONAL COPY ONLY - NOT FOR BIDDING

2.06 INSTRUMENTATION AND CONTROL

A. The specifications provided in this section are primarily performance-based and do not include all the devices and all the prescriptive requirements necessary for a fully functional Electrical System. The Contractor is responsible to develop the detailed prescriptive technical specifications necessary to specify a fully functional Instrumentation and Control System and to construct a fully functional Instrumentation and Control System.

B. Pilot Lights: shall be heavy duty, 30.5mm, Push-To-Test LED style.

C. Selector Switches and Pushbuttons: 30.5mm style.

D. PLC:

1. Manufacturer/Model: Allen Bradley ControlLogix or Approved Equal.

E. Graphic Terminal:

1. Manufacturer/Model: Allen Bradley PanelView Plus 6 Graphic Terminal or Approved Equal.

2. Operator input via keypad and touchscreen interface.

3. Minimum 12-inch flat-panel color display with 800 by 600 resolution.

F. Uninterruptable Power Supply (UPS):

1. Type: On-Line type.

a. The UPS shall be equipped with an AC/DC rectifier section, a battery connected to the DC bus, and a DC/AC inverter system.

b. There shall be no switching disturbances or other transients resulting from loss of the normal utility source and associated transition to the battery power source.

2. Size for 150 percent of the calculated maximum load connected to the UPS.

3. Sized to provide ten minutes of backup power at UPS nameplate full load capacity.

4. Submit sizing calculations.

5. Provide UPS bypass switch and circuitry.

6. The UPS shall be equipped with a loss of utility power contact and a UPS trouble contact which shall be monitored by the PLC.

7. Provide surge suppression as specified in the design specifications.

INFORMATIONAL COPY ONLY - NOT FOR BIDDING

G. Well Field and Condensate Sump Transducers:

1. General:

   a. Equipment and accessories shall be compatible with the MPE liquids and vapors defined in Table 1 of paragraph 1.03 in Section 43 31 10, “Liquid Treatment Train.”

2. Pressure Transducer:

   a. Outdoor rated.

   b. Suitable for Class I, Div 2, Group D, temperature class T2 and intrinsically safe circuit.

   c. Conduit fittings where shown on plans.

   d. Provide sensing range per process requirements.

3. Level Transducer:

   a. Cable rated for extra-hard usage and for outdoor environments where it may not be protected by conduit.

   b. Submersible hydrostatic type.

   c. Suitable for Class I, Div 1, Group D, temperature class T2 and intrinsically safe circuit.

   d. Provide sensing range per process requirements.

2.07 SOURCE QUALITY CONTROL

A. The Contractor shall prepare and submit a Factory Acceptance Test (FAT) plan. The Contractor shall provide an initial FAT plan submittal for review a minimum of 6 weeks prior to the start of the FAT and the Contractor shall receive a favorable review by the Engineer a minimum of 4 weeks prior to the start of the FAT. The FAT submittal shall include the detailed test procedures and test result forms that shall be used during the FAT.

B. The FAT shall provide a complete functional test of the MPE remedial system including the process, mechanical, electrical, instrumentation, and control subsystems. At the factory, the Contractor shall:

1. Stage and fully connect and interconnect the entire MPE system including the LTT and VTT for the FAT.

2. Provide simulated MPE well and observation well components for use during the FAT.

INFORMATIONAL COPY ONLY - NOT FOR BIDDING

C. Prior to the FAT, the Contractor shall provide:

1. Conductor insulation resistance testing for circuits 150V (or more) to ground. Test cables per NETA ATS.

2. Motor insulation resistance testing for motors over 1/2 horsepower. Test motors per NEMA MG-1.

3. End-to-end wiring and device testing for instrumentation and control circuits.

4. Pre-FAT tests procedures in the FAT submittal.

5. Completed pre-FAT test results for favorable Engineer review prior to start of the FAT.

D. The Contractor shall provide a FAT witnessed by the Engineer. The Contractor shall provide the Engineer with a FAT schedule a minimum of four weeks prior to the start of the FAT.

E. FAT procedures shall include:

1. Provide and complete a checklist to verify discrete and analog inputs from field devices update PLC memory registers.

2. Provide and complete a checklist to verify PLC discrete and analog outputs are connected to field devices.

3. Testing, checking, and correcting deficiencies of:

   a. Power, control, and monitoring circuits for continuity prior to connection to power source.

   b. Voltage of all circuits.

   c. Phase sequence.

   d. Instrumentation and control signal generation, transmission, reception, and response.

   e. Tagging and identification systems.

   f. Proper connections, alignment, calibration, and adjustment.

4. Instrument calibration.

5. Provide and complete a checklist to demonstrate discrete and analog points are displayed on the MCP Status Display Screens. Test and document each piece of status information included on these screens.

6. Provide and complete a checklist to demonstrate discrete and analog points are displayed on the MCP Alarm Display Screens. Test and document each piece of alarm information included on these screens.

INFORMATIONAL COPY ONLY - NOT FOR BIDDING

7. Provide and complete a checklist to demonstrate set points are displayed on the MCP Set Point Screens. Test and document each piece of set point information included on these screens.

8. Provide and complete a checklist to demonstrate discrete and analog points are recorded in the data log. Test and document each piece of information included in the data log. Test the data log transfer to removable media and the organization of the data on an Excel spreadsheet.

9. Provide and complete a checklist to demonstrate compliance to the specified Control Strategies.

10. Provide and complete a checklist to demonstrate that each circuit shown on the electrical and instrumentation and control drawings has been functionally tested.

11. Process and mechanical test procedures:

    a. Perform test procedures specified in the Pre-Delivery Testing paragraphs of Section 43 31 10, "Liquid Treatment Train," and Section 43 31 20, "Vapor Treatment Train."

    b. Verify cleanliness of connecting piping systems.

    c. Verify alignment of connected machinery.

    d. Verify vacuum and pressure integrity of all closed systems.

    e. Verify Lubrication.

    f. Verify valve orientation and position status for manual operating mode.

    g. Verify tankage integrity using clean water.

F. FAT written report shall include:

1. Date and of name responsible Contractor's test representative.

2. Initials of equipment manufacturer's representatives, the Contractor's representative, and the Engineer.

3. All test information and results including specified operational parameters.

4. Record of relevant performance data for the original testing and re-tests.

INFORMATIONAL COPY ONLY - NOT FOR BIDDING

PART 3 – EXECUTION

3.01 ENCLOSURE AND REMEDIAL SYSTEM FABRICATION

A. The enclosure and remedial systems shall be fabricated to the greatest extent practical within the Equipment Supplier's factory.

B. The Contractor shall be responsible for working with the Equipment Supplier to ensure that all elements of the Work described in the Contract Documents and as required for a complete and functional system installation, whether installed, completed and/or commissioned by the Equipment Supplier or by the Contractor, are fully coordinated and fully compliant with the requirements of the Contract Documents.

C. The Contractor shall be responsible to ensure that the containers meet all requirements of L&I and for obtaining a Certificate of Occupancy from L&I for the completed containers.

3.02 COORDINATION

A. Equipment Supplier shall be responsible to coordinate the installation of the remedial systems including those items furnished under other sections.

B. A pre-installation coordination meeting shall be held at the site including the Equipment Supplier, Contractor, Engineer, Owner and other trades involved in the work.

C. The meeting shall be held no later than 15 days prior to the start of the Equipment Supplier's installation work.

3.03 DELIVERY SERVICES

A. Delivery from the Equipment Supplier's plant to the project site shall be in strict accordance with the Equipment Supplier's requirements to ensure that the containers and remedial systems are delivered in undamaged condition.

3.04 INSTALLATION

A. Installation of the containers on the foundations shall be performed in strict accordance with the Equipment Supplier's requirements.

B. A representative of the Equipment Supplier shall be on-site during the container installation process, and shall supervise the installation.

3.05 ELECTRICAL WORK

A. The electrical work required for this section shall be in accordance with Division 26.

B. Refer to the National Electrical Contractors Association's (NECA) National Electrical Installation Standards (NEIS) for Standard Practices for Good Workmanship in Electrical Contracting (NECA-1) as the minimum baseline of quality and workmanship for installing electrical products and systems.

1. This baseline defines what is meant by 'neat and workmanlike' as required by the National Electrical Code Section 110-12.

2. Specified requirements supersede NECA practices.

INFORMATIONAL COPY ONLY - NOT FOR BIDDING

3.06 PROGRAMMING SERVICES

A. Programming and Configuration Services: Provide programming and configuration services for each device requiring programming and configuration.

B. Field Testing, Startup, and Commissioning: Provide programming and configuration services during field testing, startup, and commissioning.

C. Post-Commissioning: Provide 40 hours of on-site post-commissioning field programming and configuration services. Assume that these services are provided during five separate trips. These services shall be scheduled by the Owner at any time up to 12 months after Final Commissioning is complete. Include travel and related travel expenses in bid.

3.07 FIELD QUALITY CONTROL

A. Electrical Testing:

1. The electrical testing of wire, cables, equipment, panels, and devices required to be installed within the containers shall be in accordance with Division 26.

B. Provide field testing and startup procedures specified in the Field Erection, Supervision and Training paragraphs of Section 43 31 10, “Liquid Treatment Train,” and Section 43 31 20, “Vapor Treatment Train.”

C. Following system startup and testing the Contractor shall provide a 5-day commissioning period where the system shall operate 24 hours per day without trouble for the entire 5-day period. Should an upset or problem occur other than Owner-approved shutdowns during this 5-day commissioning period, the Contractor shall repair the problem and restart the 5-day commissioning process.

END OF SECTION

INFORMATIONAL COPY ONLY - NOT FOR BIDDING

This Page Intentionally Left Blank

INFORMATIONAL COPY ONLY - NOT FOR BIDDING

Division 22

Plumbing

INFORMATIONAL COPY ONLY- NOT FOR BIDDING

SECTION 22 13 16
PIPE AND FITTINGS

PART 1 – GENERAL

1.01 DESCRIPTION

A. This section specifies piping, fittings, and connections. The actual pipe size and fittings shall be as shown on the Drawings.

1.02 QUALITY CONTROL

A. Testing by Manufacturer:

1. Manufacturer shall test all material as required by these Specifications and the standards referenced.

1.03 SUBMITTALS

A. All submittals shall be in accordance with 01 33 00 unless otherwise noted.

B. Submit for review a scaled line drawing of entire pipe network showing each joint, deflection angle, lengths of pipe, fittings, valves, expansion joints, pipe supports, for all pipe systems and connection type and location to skids/equipment from the ponds to the well locations.

C. Manufacturer's Certificate of Proper Installation for the following (if applicable):

1. Mechanical joint restraints.

2. Flexible expansion joints.

D. Pressure test results for all piping systems.

1.04 PIPING SYSTEMS

A. General:

1. If there are any conflicts in the specifications, use the stronger pipe class. Contractor shall submit calculations with shop drawings where specified.

2. All buried piping shall have a minimum cover of 24 inches, unless otherwise shown on the Drawings. Pipes supported at grade shall follow contours necessary to maintain minimum slope specified and shall be anchored/supported as shown in the Drawings.

3. Whenever the maximum allowable trench condition for the pipe used is for any reason exceeded, as shown on the Drawings or accepted pipe design criteria is modified, the Contractor shall at his expense provide evidence that the pipe strength is adequate to carry the increased load or embed or cradle the pipe in concrete in a manner

INFORMATIONAL COPY ONLY - NOT FOR BIDDING

acceptable to the Owner's Representative. Calculations shall be submitted for the proposed method of correction.

B. Piping Designation:

1. Piping is designated by a two-part code consisting of:

a. Pipe diameter in inches.

b. An abbreviation indicating the service. For example, the designation 12 FM shall mean a 12-inch-diameter force main. Refer to the Piping Systems Table for the services, operating pressures, temperatures, and testing information.

PART 2 – PRODUCTS

2.01 CARBON STEEL

A. See Data Sheet 22 13 16-DS1 below.

2.02 PVC

A. Any exposed PVC located outdoors shall be installed with UV protective paint per manufacturer's recommendation.

B. See Data Sheet 22 13 16-DS2 below.

2.03 HDPE

A. See Data Sheet 22 13 16-DS3 below.

2.04 STAINLESS STEEL

A. See Data Sheet 22 13 16-DS4 below.

2.05 HOSES AND TUBING

A. Hose and tubing shall not be spliced.

B. Material shall not allow permeation of process liquid, gas, or vapor.

C. Hose and tubing shall be compatible with operating temperature, pressure, and process flow constituents.

D. All hose and tubing shall be installed per manufacturer's requirements for motion absorption, system pressure changes, minimum bend radius, single plane bending, and vibration.

E. Hose and tubing shall be installed with quick connect fittings.

F. Hose and tubing shall comply with any design criteria specified herein or in the drawings (e.g. clear, armor guard, spiral guard, etc.)

INFORMATIONAL COPY ONLY - NOT FOR BIDDING

2.06 FLEXIBLE EXPANSION JOINTS

A. The expansion joint shall consist of an inner tube, body, and outer cover, and shall have flanged ends. The tube shall be natural rubber or synthetic materials. The body shall consist of fabric and rubber compounds reinforced with steel wire for strength. The body materials shall be compatible with the tube and shall be suitable for the specified service conditions. The cover shall be formed from natural or synthetic rubber suitable to external service to resist weather, ozone, and corrosive fumes.

B. Flanges shall be constructed integrally with the body to resist stresses. Flanges shall be full-pattern so that gaskets are not necessary. Flanges shall be drilled to ANSI B 16.5, Class 150#.

C. Stainless steel control rods.

D. Expansion joints shall be supported per manufacturer requirements and shall not be installed to support piping weight.

E. Manufacturer/Model:

1. Redflex Type 1-J, Double Arch unless otherwise specified.

2. Or Approved Equal.

PART 3 – EXECUTION

3.01 INSTALLATION OF BURIED PIPE

A. Installation of buried pipe shall be in accordance with Standard Specifications of the local jurisdiction.

B. Lines and Grades:

1. In position and to accurate lines, elevations and grades as shown on plans.

2. Slope to drain where possible.

3. Lay pipe to grade between control elevations shown on plans when slope is not indicated.

C. Securing In Place: By blocking, brackets, clamps or other approved methods to secure pipe in place to withstand test pressure without movement.

D. Restrained Joints: All pressure pipe systems shall be provided with restrained joints.

3.02 INSTALLATION OF INTERIOR PIPE

A. Complete installation to present neat orderly appearance.

B. Do not block openings or passageways with piping.

INFORMATIONAL COPY ONLY- NOT FOR BIDDING

C. Run piping parallel to walls.

D. Keep piping free from contact with structure or installed items.

E. Allow clearances for expansion and contraction of pipe.

3.03 INSTALLATION OF SPIGOT, PUSH-ON, AND MECHANICAL JOINT PIPE

A. Push-On Joint Installation:

1. Clean hub and insert gasket.

2. Apply gasket lubricant to spigot and inside of gasket.

3. Drive spigot into gasketed hub with pulling tool or suitable device.

B. Mechanical Joint Installation:

1. Install in accordance with pipe and restraining gland manufacturer's recommendations and AWWA C600.

2. Allow for joint movement upon pressurization so as not to stress joints or pipe supports and maintaining design pipeline alignment.

3.04 FLANGED PIPE INSTALLATION

A. Tighten flange bolts so that gasket is uniformly compressed and sealed.

B. Do not distort flanges.

C. Leave flange bolts with ends projecting 1/8- to 3/8-inch beyond the face of nut after tightening.

3.05 THREADED JOINT INSTALLATION

A. Threads: ANSI B2.1, NPT.

B. Cut threads full and clean with sharp dies conforming to ANSI B31.1.

C. Ream ends of pipe after threading and before assembly to remove burrs.

D. Leave not more than three pipe threads exposed at each connection.

E. Joint Sealer – Teflon thread tape.

INFORMATIONAL COPY ONLY - NOT FOR BIDDING

3.06 TESTING

A. General:

1. Air lines shall be tested pneumatically, water lines shall be tested hydrostatically, and vacuum lines shall be tested via vacuum.

2. The Contractor shall inform the Owner's Representative at least three days in advance of the time set for testing the piping system. The Owner's Representative will witness all testing.

3. Prior to calling for the Owner's Representative to witness the pressure test, the Contractor shall first perform a satisfactory pressure test.

4. Contractor shall provide for testing the following at no added cost.

   a. Labor to conduct testing.

   b. All materials, fittings, valves, and equipment for testing. This shall include stainless steel tapping saddles and corporation stops at each end of sections to be tested. After successful testing and disinfection the stops shall be removed and saddles plugged in accordance with Owner's Representative instructions.

   c. All monitoring equipment and pressure gauges calibrated in accordance with manufacturer's recommendations.

   d. Water to conduct testing.

   e. Written reports of test results to Owner's Representative.

5. Each system shall generally be tested in sections. Each section shall successfully meet the requirements specified herein before acceptance by the Owner's Representative.

6. Should any defects appear in the pipe or fittings, the necessary repair shall be made, and the line retested until it shall meet the requirements.

7. The Contractor shall take all necessary precautions to prevent any joints from drawing while the pipelines and their appurtenances are being tested and he shall at his own expense repair any damage to the pipes and their appurtenances or to any other structures resulting from or caused by these tests.

8. The Contractor shall perform testing after backfilling to grade and compaction, but prior to paving.

9. Equipment, which may be damaged by the specified test conditions, shall be isolated.

10. Testing shall be performed using calibrated test gauges and calibrated volumetric measuring equipment to determine leakage rates. Each test gauge shall be selected so that the specified test pressure falls within the upper half of the gauge's range.

11. Drains: Unless otherwise specified, drain systems, other than pumped drain systems, shall be tested in accordance with UPC.

INFORMATIONAL COPY ONLY - NOT FOR BIDDING

B. Flushing Pipelines:

1. Flushing shall be performed prior to pressure testing.

2. Only the Owner's Representative may operate existing valves on the system.

3. Upon completion of pipe laying and pressure testing, all dirt and foreign matter shall be removed by a thorough flushing. Each section of newly laid pipe between valves or dead ends shall be flushed independently, and other dead end appurtenances shall be flushed simultaneously with the parent line.

4. No flushing shall be performed without the prior approval of the Owner's Representative.

C. Hydrostatic Test for Liquid Filled Pipelines:

1. Water for testing must be obtained by the Contractor by arrangement with the Owner's Representative. A positive displacement type pump shall be furnished by the Contractor for testing. Feed for the pump shall be from a clean container, wherein the actual amount of "makeup" water can be measured.

2. The test shall be made by closing valves or providing bulkheads or plugs and filling the pipeline with water. Provisions shall be made for release of all air in the lines. Pipelines may be filled with water sometime before testing to allow for absorption of water by pipe or joint material. After all joints are apparently tight and there is no evidence of leakage. During the test, pipe, fittings and joints shall be completely tight.

3. Upon completion of a section of the pipe installation, the pipeline shall be subjected to a pressure test. Valves shall be provided to withstand the pressure as outlined herein. Any leakage caused by defective workmanship or materials shall be repaired, and the line shall again be tested to full compliance at the Contractor's expense. Concrete thrust blocking for fittings shall be in place and the concrete "set" sufficiently to withstand the test pressure before starting the test.

4. Pressure tests of the pipe shall be made with a Contractor provided service saddle and corporation stop per the Standards of the local jurisdiction. After use, corporation stop shall be completely closed and test piping disconnected. After piping removal from the corporation stop, a bronze cap or plug shall be installed on the outlet side of the corporation stop. The nut on the bottom of the existing corporation stop shall be completely tightened. If the existing corporation stop leaks when fully closed or after being tightened, the existing corporation stop shall be completely plugged as approved by the Owner's Representative. Each section of pipeline shall be individually tested between valves. During testing, the Contractor shall verify and ensure that the pressure differential across the valves does not exceed the rated working pressure of the valves.

5. The test pressure shall be as shown in Piping Schedule as measured at the lowest elevation of the pipeline section under test. The test pressure must be maintained a minimum of 1 hours or sufficiently longer to permit the Owner's Representative or Engineer to make an inspection of the system.

6. Correct leakage greater than allowable, and retest.

INFORMATIONAL COPY ONLY - NOT FOR BIDDING

7. Test results shall be reported using a Form acceptable to the Owner's Representative.

8. Full payment for pipeline will not be made until passing test results are received.

D. Vacuum Testing:

1. The entire system shall be isolated and negatively pressurized to the pressure required in the Piping Schedule for 1 hour with allowable leakage as specified.

2. Correct leakage greater than allowable, and retest.

E. Pneumatic Testing:

1. After the system is completely installed and before it is placed in service, the piping system must be flushed to remove all loose debris and then tested. An accepted flushing method is to allow a volume of two to five times the expected flow through each respective part of the system. This is done by connecting air under pressure to the piping system and then opening and closing all outlets and valves, starting from the closest and working to the most remote.

2. The entire system shall be pressurized to the pressure required in the Piping Schedule for 1 hour with allowable leakage as specified.

3. Correct leakage greater than allowable, and retest.

(THIS SECTION CONTINUES WITH TABLE 1 BELOW)

INFORMATIONAL COPY ONLY - NOT FOR BIDDING

TABLE 1. DATA SHEET 22 13 16-DS1, CARBON STEEL

PIPE GROUP	NAME	REQUIREMENTS	JOINTS AND FITTINGS	INSTALLATION, GASKETS, COATINGS, AND OTHER INSTRUCTIONS	TEST METHODS	LEAKAGE ALLOWANCE
CS3	CARBON STEEL, SCH 40	CARBON STEEL, ASTM A53, GRADE A, SEAMLESS	3000 LB., ANSI B16.11, FORGED STEEL, THREADED ENDS, 2" AND SMALLER.	INSTALLATION SHALL BE IN ACCORDANCE WITH MANUFACTURER'S RECOMMENDATIONS.	SEE PIPING SCHEDULE	ZERO
			SCH 40, ANSI B16.9 ASTM A234, GRADE WPB CARBON STEEL, BUTT WELDING ENDS, 2-1/2" TO 10".			
			3/8" WALL, ANSI B16.9 ASTM A234, GRADE WPB CARBON STEEL, BUTT WELDING ENDS, 12" TO 30".			
			UNIONS: 3000 LB., FORGED STEEL, ASTM A105, GRADE 2, INTEGRAL STEEL SEAT, GROUND JOINT, THREADED ENDS, 2" AND SMALLER.			
			FLANGES: 150 LB. ANSI B16.5, ASTM A181, GRADE 1, FORGED CARBON STEEL, SLIP-ON OR WELD NECK TYPE 2-1/2" AND LARGER, THREADED 2" AND SMALLER. WHERE BOLTING TO FLAT FACE CAST IRON FLANGES, STEEL FLANGES SHALL BE FURNISHED WITH FLAT FACE; OTHER SHALL BE RAISED FACE.			
			BOLTING: STANDARD HEXAGON HEAD FULL OR PARTIAL THREADED BOLTS, AS ASSEMBLY REQUIRES, CARBON STEEL ANSI B18.2, ASTM A307, GRADE B WITH ONE HEAVY SEMI-FINISHED HEXAGON NUT AND ONE LOCK WASHER PER BOLT, CADMIUM OR ZINK PLATED. SUBMERGED SERVICE BOLTS TOO.			

INFORMATIONAL COPY ONLY - NOT FOR BIDDING

TABLE 2. DATA SHEET 22 13 16-DS2, SCHEDULE 80 PVC

PIPE GROUP	NAME	REQUIREMENTS	JOINTS AND FITTINGS	INSTALLATION, GASKETS, COATINGS, AND OTHER INSTRUCTIONS	TEST METHODS	LEAKAGE ALLOWANCE
PVC2	SCH80 PVC	PVC CLASS 12454-B, ASTM D1785, SCHEDULE 80 PLAIN ENDS 1/2" THROUGH 4"	FITTINGS: PVC CLASS 12454-B, ASTM D1785 SCHEDULE 80, PLAN ENDS 1/2" THROUGH 8" TO BE ESLON, SPEARS, HARVEL OR EQUAL.	WHEN INSTALLING PIPE WITH A FLANGE TO A BUTTERFLY VALVE, THE CONTRACTOR SHALL VERIFY CLEARANCES BETWEEN THE INSIDE OF THE PIPE AND THE VALVE DISC. WHEN NECESSARY, CONTRACTOR MUST GRIND THE INSIDE RADIUS OF THE PIPE TO ENSURE PROPER VALVE OPERATION.	SEE PIPING SCHEDULE	ZERO
			UNIONS: PVC CLASS 12454-B, ASTM D2467, SCHEDULE 80, SOCKET ENDS, 3" AND SMALLER.	FOR ALL THREADED CONNECTIONS, CONTRACTOR MUST APPLY LEAK LOCK TO THE THREADS PRIOR TO ASSEMBLY. LEAK LOCK IS MANUFACTURED BY HIGHSIDE CHEMICAL INC. THE USE OF TEFLON TAPE IS NOT ALLOWED.		
			FLANGES: 150 LB. ANSI B.5 PVC CLASS 12454-B SOCKEYE TYPE, 1/2" THROUGH 3"; VANSTONE TYPE 4" AND ABOVE.	PAINTING: FOR OUTDOOR APPLICATIONS, PVC PIPING SYSTEM TO BE PAINTED AFTER INSTALLATION AND TESTING WITH AN APPROVED PAINT SYSTEM FOR UV PROTECTION.		
			BOLTING: STANDARD HEXAGON HEAD FULL OR PARTIAL, THREADED BOLTS, AS ASSEMBLY REQUIRES, CARBON STEEL ANSI B18.2 ASTM A307, GRADE B, WITH ONE HEAVY SEMI-FINISHED HEX NUT AND TWO PLAIN TYPE A WASHERS, ANSI B27.2 PER BOLT. CADMIUM OR ZINC PLATED.			

INFORMATIONAL COPY ONLY - NOT FOR BIDDING

TABLE 3. DATA SHEET 22 13 16-DS3, HDPE DR 17

PIPE GROUP	NAME	REQUIREMENTS	JOINTS AND FITTINGS	INSTALLATION, GASKETS, COATINGS, AND OTHER INSTRUCTIONS	TEST METHODS	LEAKAGE ALLOWANCE
PE3	HDPE DR11	HIGH MOLECULAR WEIGHT POLYETHYLENE PER ASTM D3350 AND MANUFACTURED IN ACCORDANCE TO ASTM F714 AND/OR ASTM D3035	FITTING: INSIDE BUILDINGS TO BE MOLDED FITTINGS WITH THE SAME PRESSURE RATING AS PIPE.	WHEN INSTALLING PIPE WITH A FLANGE TO A BUTTERFLY VALVE, THE CONTRACTOR SHALL VERIFY CLEARANCE BETWEEN THE INSIDE OF THE PIPE AND THE VALVE DISC. WHEN NECESSARY, CONTRACTOR SHALL GRIND THE INSIDE RADIUS OF THE PIPE TO ENSURE PROPER VALVE OPERATIONS.	SEE PIPING SCHEDULE	ZERO
			FITTING: EXTERIOR TO BE MOLDED OR FABRICATED FITTINGS WITH THE SAME PRESSURE RATING AS PIPE.	INSTALLATION SHALL BE IN ACCORDANCE WITH MANUFACTURER'S RECOMMENDATIONS.		
PE6	HDPE DR17		JOINTS: FUSION JOINTS AS OUTLINED IN ASTM D2657 AND CONFORM TO THE GENERIC BUTT FUSION JOINING PROCEDURE FOR FIELD JOINING POLYETHYLENE PIPE, TECHNICAL REPORT TR-33/2005, PUBLISHED BY THE PLASTIC PIPE INSTITUTE (PPI).			
			FLANGES: A MOLDED FLANGE CONNECTION ADAPTOR WITH A STAINLESS STEEL BACKUP RING. FLANGE DRILLING TO CONFORM WITH ANSI B16.1, CLASS 150.	GASKETS: 1/8" THICK NEOPRENE RUBBER, S5-S6 DUROMETER HARDNESS, WITH DIMENSIONS PER ANSI B16.21		
			BOLTING: STANDARD HEXAGON HEAD FULL OR PARTIAL THREADED BOLTS, AS ASSEMBLY REQUIRES, 304 SST WITH ONE HEAVY SEMI-FINISHED HEXAGON NUT AND ONE SST LOCK WASHER PER BOLT.			

INFORMATIONAL COPY ONLY - NOT FOR BIDDING

TABLE 4. DATA SHEET 22 13 16-DS4, SST

PIPE GROUP	NAME	REQUIREMENTS	JOINTS AND FITTINGS	INSTALLATION, GASKETS, COATINGS, AND OTHER INSTRUCTIONS	TEST METHODS	LEAKAGE ALLOWANCE
SST	316 SST SCH 40	THREADED END, STAINLESS STEEL, ASTM A269	TYPE 316 NPS THREADED AND SHALL CONFORM TO ANSI B16.3, CLASS 150		SEE PIPING SCHEDULE	ZERO

END OF SECTION

INFORMATIONAL COPY ONLY - NOT FOR BIDDING

This Page Intentionally Left Blank

INFORMATIONAL COPY ONLY - NOT FOR BIDDING

SECTION 22 13 16.1

PIPING SCHEDULE

Table 22 13 16.1-1. Piping Schedule

Legend	Service	Size (In.)[a]	Material	Data Sheet	Installation	Joint Type	Lining/Coating[b]	Test Pressure and Type	Remarks
CS3	AIR	≤ 4″	CARBON STEEL	DS1	ALL	THD	Bare/Bare	-25″ Hg (Vacuum Lines) 60 psig – H or P (Pressure Lines) 150 psig – P (compressed air lines)	Provide thrust restraint on all joints.
PVC2	VAE, V, GW	≤ 4″	PVC	DS2	ALL	SW/FL	Bare/Bare	-25″ Hg (Vacuum Lines) 60 psig – H (Pressure Lines)	Provide thrust restraint on all joints.
PE3	EFFLUENT	≤ 4″	HDPE	DS3	ALL	F	Bare/Bare	60 psig – H	Provide thrust restraint on all joints.
PE6	WATER	≤ 4″	HDPE	DS3	ALL	F	Bare/Bare	60 psig – H	Provide thrust restraint on all joints.
SS7	AIR, GW	≤ 4″	316 SST	DS4	ALL	THD	Bare/Bare	150 psig – P (compressed air lines)	

[a] Unless noted, pipe schedule applies to all sizes for a particular service. Reference the Drawings for actual sizes to be used.

[b] Heat tracing and insulation shall be per Sections 40 41 13 and 42 42 13, respectively. Reference the drawings for lines to be insulated and heat traced.

Size
“>“ Greater Than
“<“ Less Than
“≥“ Greater Than or Equal To
“≤“ Less Than or Equal To
“All” All Sizes

Material
“CI” Cast Iron
“COP” Copper
“DI” Ductile Iron
“PVC” Polyvinyl Chloride
“SST” Stainless Steel

Installation
“All” All Installations
“BUR” Buried
“EMB” Embedded (in concrete)
“EXP” Exposed (interior or exterior)
“SUB” Submerged"

Joint Type
“F” Fusion
“FL” Flanged
“HU” Hub and Spigot
“SB” Solder/Braze
”SW” Socket Welded
“THD” Threaded
“W” Weld

Test Type
“G” Gravity Test
“H” Hydrostatic Test
“P” Pneumatic/Air
“PC” Test per Uniform Plumbing Code

END OF SECTION

INFORMATIONAL COPY ONLY - NOT FOR BIDDING

This Page Intentionally Left Blank

INFORMATIONAL COPY ONLY - NOT FOR BIDDING

SECTION 22 13 19
VALVES AND OPERATORS

PART 1 – GENERAL

1.01 DESCRIPTION

A. Furnish all labor, materials, equipment and incidentals required, and install complete and ready for operation valves as shown in the Drawings, and as specified herein.

   1. Valves shall be furnished complete with all necessary actuators which are required for proper valve operation.

B. Unless specifically noted, valves shall match pipe diameter and material.

1.02 SUBMITTALS

A. Submittals shall be in accordance with Section 01 33 00, "Submittal Procedures."

B. Product technical submittal data shall contain the following information and data:

   1. Complete shop drawings of valves.

   2. Product data sheets for each make and model.

   3. Complete catalog information, descriptive literature, specifications, and identification of materials of construction.

   4. Dimensions, port shape, diameter, weight, and capacity.

   5. Materials of construction, with American Society for Testing and Materials (ASTM) reference and grade.

   6. Manufacturer's certification that products meet or exceed minimum requirements specified herein.

   7. Pressure and temperature rating.

   8. Actuators and accessories details.

   9. Manufacturer's product brochure, cut-sheets, and parts diagrams.

   10. Flow coefficient and/or pressure drop data.

C. Operation and maintenance manuals.

D. Manufacturer's installation instructions.

INFORMATIONAL COPY ONLY - NOT FOR BIDDING

1.03 QUALITY ASSURANCE

A. Valves of the same type shall be furnished by a single manufacturer.

B. Valves shall be products of well-established reputable firms who are fully experienced, reputable, have been selling the products specified herein for a minimum of 10 years, and are qualified in the manufacture of the particular product furnished.

C. Valves shall be designed, constructed, and installed in accordance with the requirements and procedures of applicable American Water Works Association (AWWA) standards, and shall comply with these Specifications as applicable.

1.04 HANDLING AND STORAGE

A. Valves shall be stored in a manner to prevent damage and be kept free of dirt, mud, or other debris.

PART 2 – PRODUCTS

2.01 GENERAL

A. Operators, actuators, and accessories shall be factory-mounted prior to shipping to the project site.

1. Renewable parts including discs, packing, and seats shall be of types specified herein and acceptable by valve manufacturer for the intended service.

2. All units shall have the name of the manufacturer and the size of the valve cast on the body or bonnet, or shown on a permanently attached stainless steel plate in raised embossed letters.

3. Isolation valves shall be suitable for the intended service with bubble tight shutoff to flow in either direction.

B. Valves shall be the same size and valve ends shall be the same type as the adjoining pipe, unless noted otherwise on the Drawings.

C. Where applicable, valves shall all be quarter turn, lever operated.

2.02 COMBINATION AIR RELEASE/VACUUM VALVES

A. Design:

1. Working Pressure Range: 3 psi – 145 psi.

2. Maximum Working Temperature: 60 degrees C.

3. Maximum Intermittent Temperature: 90 degrees C.

INFORMATIONAL COPY ONLY - NOT FOR BIDDING

4. The unique design of the valve prevents contact between the wastewater and the sealing mechanism by creating an air gap at the top of the valve. These features are achieved by:

    a. The Conical Body Shape: designed to maintain the maximum distance between the liquid and the sealing mechanism and still obtain minimum body length.

    b. Spring-Loaded Joint Between the Stem and the Upper Float: vibrations of the lower float will not unseal the air release component. Release of air will occur only after enough air accumulates.

    c. The Rolling Seal Mechanism: less sensitive to pressure differentials than a direct float seal. It accomplishes this by having a comparably large orifice for a wide pressure range (up to 10 bar).

    d. Funnel-Shaped Lower Body: designed to ensure that residue reclaimed water solid matter will fall back into the system and be carried away by the main pipe. Body made of composite materials, resistant to corrosion. Internal metal parts are made of corrosion-resistant stainless steel. Floats are made of composite materials.

        1) Flexible rolling seal provides smooth positive opening, closing, and leak-free sealing over a wide range of pressure differentials.

        2) Drainage tap with ball valve is provided.

        3) 3/8-inch threaded discharge outlet enables removal of excess fluids.

        4) Dynamic design allows for high velocity air discharge while preventing premature closure.

        5) 1/4-inch ball valve releases trapped pressure and drains the valve body prior to maintenance.

B. Materials:

1. Body Reinforced Nylon.

2. Discharge Outlet Polypropylene.

3. Rolling Seal E.P.D.M.

4. Clamping Stem Reinforced Nylon.

5. Float Foamed Polypropylene.

6. O-Ring BUNA-N.

7. Body Reinforced Nylon.

8. Float Stem Stainless Steel SAE 316.

INFORMATIONAL COPY ONLY - NOT FOR BIDDING

9. Clamp Reinforced Nylon + Stainless Steel SAE 316.

10. O-Ring BUNA-N.

11. Float Foamed Polypropylene.

12. Base Reinforced Nylon.

13. Ball Valve 1/4-inch Brass Nickel Plated.

C. Manufacturers and Products:

1. 1-inch ARI D-021 as manufactured by ARI.

2. Or Approved Equal.

2.03 BALL VALVES (PVC)

A. Valve shall meet ASTM standards for polyvinyl chloride (PVC).

1. Flanged versions of the Type 375 valve shall meet the ANSI B16.5 150 wpounds standard.

2. PVC versions of the Type 375 shall be NSF-61 approved for drinking water applications.

B. Temperature:

1. 232 PSI for sizes 3/8-inch to 4-inch in PVC socket at 72 degrees F.

2. 150 PSI for sizes 3/8-inch to 4-inch in all materials flanged or threaded at 72 degrees F.

C. Material:

1. Valve body shall be constructed of PVC.

2. Seats shall be made of polytetrafluoroethylene (PTFE).

3. Seals shall be made of fluoroelastomer polymer (FPM) or EPDM.

D. Function:

1. Valves shall have a blowout proof stem with double o-rings.

a. Valve seat carrier shall be adjustable.

b. PTFE seats shall have backing o-rings.

c. Handles shall be designed to include an integrated tool for removal of the union bush.

INFORMATIONAL COPY ONLY - NOT FOR BIDDING

E. Manufacturer:

1. Georg Fischer, Type 375.

2. Or Approved Equal.

2.04 BALL VALVES (COMPRESSED AIR SERVICE)

A. Design:

1. 2 Piece, Cast Bronze body.

2. Full Port Ball.

3. Locking Lever.

4. Nut AISI-1010.

5. Handle A283-D.

6. Stem Gland Screw B16-C36000.

7. Stem Packing PTFE.

8. Stem B16-C36000.

9. Body B584-C84400.

10. Seat PTFE 8 Ball B16-C36000.

11. End Plug B584-C84400.

12. Thrust Washer PTFE.

B. Manufacturer:

1. Crane 9211.

2. Or Approved Equal.

2.05 BALL VALVES (SST)

A. Design:

1. Two-Piece SST body.

2. Full Port Ball.

3. Body CF8M.

4. Cap CF8M.

INFORMATIONAL COPY ONLY - NOT FOR BIDDING

5. Ball CF8M.
6. Seat RTFE – PTFE 15 percent GF.
7. Stem AISI 316.
8. Body Seal PTFE (for 1/4 inch – 1 inch).
9. Thrust Washer PTFE.
10. Stem Packing PTFE.
11. Gland Nuts A2.
12. Spring Washer AISI 304.
13. Handle Nuts A2.
14. Locking Device AISI 304.
15. Handle AISI 304.
16. Handle Sleeve PVC.

B. Manufacturer:

1. Crane 9431-LL.
2. Or Approved Equal.

2.06 PRESSURE RELIEF VALVES (PRV)

A. Design:

1. Inline pressure relief with primary rolling diaphragm and secondary flat diaphragm.
2. Adjustable pressure relief settings from 5 psi to 100 psi.
3. PVC body painted for UV.
4. PTFE diaphragm energized by a non-wetted FKM diaphragm.
5. PVC non-wetted spring housing.
6. Zinc-platted steel springs (non-wetted).
7. Stainless steel external fasteners.
8. Thermoplastic valve adjusting bolt, lock nut, and body.
9. Install unions on upstream and downstream side of valve.

INFORMATIONAL COPY ONLY - NOT FOR BIDDING

B. Manufacturer:

1. Plastomatic, Series RVDT.

2. Or Approved Equal.

PART 3 – EXECUTION

3.01 INSTALLATION

A. General:

1. Valves and accessories shall be installed in a manner and location as shown on the Drawings, or as required for the application and in accordance with the manufacturer's instructions.

2. Size of valve shall be equal to line piping in which valve is installed, unless otherwise noted on the Drawings.

3. Support all valves where necessary.

4. In case of conflict between these Specifications and a governing code, the more stringent standard shall prevail.

B. Joints:

1. Flanged:

a. Bolt holes of valves with flanged ends shall straddle the horizontal and vertical centerlines of the pipe run to which the valves are attached.

b. Clean flanges by wire brushing before installing flanged valves.

c. Clean flange bolts and nuts by wire brushing, lubricate threads with oil and graphite, and tighten nuts uniformly and progressively.

d. If flanges leak under pressure testing, loosen or remove the nuts and bolts, reseat or replace the gasket, reinstall or retighten the bolts and nuts, and retest the joints.

e. Joints shall be watertight.

2. Threaded:

a. Clean threaded joints by wire brushing or swabbing.

b. Apply Teflon joint compound or Teflon tape to pipe threads before installing threaded valves.

c. Joints shall be watertight/airtight.

INFORMATIONAL COPY ONLY - NOT FOR BIDDING

C. Exposed Valves:

1. Unless otherwise indicated on the Drawings, install valves in horizontal runs of pipe having centerline elevations 4 feet 6 inches or less above the floor with the operator vertical.

   a. Install valves in horizontal runs of pipe having centerline elevations between 4 feet-6 inches and 6 feet-9 inches above the floor with the operator horizontal.

2. Install valves on vertical runs of pipe that are next to walls with the operator horizontal, away from the wall.

   a. Valves on vertical runs of pipe that are not located next to walls shall be installed with the operator horizontal, oriented to facilitate valve operation.

D. Accessories: Provide all accessories necessary for proper valve operation as specified or required for the application.

E. Valve Operators:

1. Valves shall be installed with the operator in a position for convenient operation.

   a. Coordinate all valve operator locations and orientations with the Owner prior to installation.

2. Particular care shall be taken to ensure that space is available for operation of lever operated valves without interference from walls, piping, or equipment.

   a. Any valve that is installed, in the opinion of the Owner, in a manner that operation is inconvenient, shall be modified or removed and reinstalled in a manner suitable to the Owner.

F. Adjustments: Check and adjust valves and accessories for smooth and optimum operation.

1. Lubricate in accordance with manufacturer's recommendations.

3.02 VALVE LEAKAGE AND FIELD TESTING

A. Test valves for leakage at the same time that the connecting pipelines are tested.

1. See Section 22 13 16.1, "Piping Schedule" for pressure testing requirements.

2. Protect or isolate any parts of valves, actuators, or control and instrumentation systems whose pressure rating is less than the pressure test.

3. Valves shall show zero leakage.

4. Repair or replace any leaking valves and retest in accordance with the Specifications.

INFORMATIONAL COPY ONLY - NOT FOR BIDDING

B. Contractor shall operate each manual valve through ten full cycles of opening and closing.

1. Valves shall operate from full open to full close without sticking or binding.

2. If valves stick or bind, or do not operate from full open to full closed, repair or replace the valve and repeat the tests.

END OF SECTION

INFORMATIONAL COPY ONLY - NOT FOR BIDDING

This Page Intentionally Left Blank

INFORMATIONAL COPY ONLY - NOT FOR BIDDING

SECTION 22 33 46

PIPE HANGERS AND SUPPORTS

PART 1 – GENERAL

1.01 WORK INCLUDED

A. This section specifies brackets and pipe supports. Pipe supports shall be furnished complete with all necessary inserts, bolts, nuts, rods, washers, and other accessories.

1.02 PIPING SUPPORT DESIGN

A. In certain locations, pipe supports, anchors, and expansion joints have been indicated on the Drawings, but no attempt has been made to indicate every detail. It shall be the Contractor's responsibility to design and provide a complete system of pipe supports and to anchor all piping, in accordance with the requirements set forth herein and Section 13 05 41, "Seismic Restraint Requirements for Nonstructural Components." Additional pipe supports may be required adjacent to expansion joints.

B. All piping shall be rigidly supported and anchored so that there is no movement or visible sagging between supports.

C. All pipe supports shall be spaced to provide the required minimum support spacing per manufacturer recommendations for the corresponding pipe.

1.03 QUALITY ASSURANCE

A. This section incorporates by reference the latest revision of the following documents. These references are a part of this section as specified and modified. In case of conflict between the requirements of this section and those of the listed documents, the requirements of this section shall prevail.

Reference	Title
ASME B31.3	Process Piping
AISC M011-89	Manual of Steel Construction – 8th Edition
MSS SP-58-88	Pipe Hangers and Supports – Materials, Design and Manufacture
MSS SP-69-83	Pipe Hangers and Supports – Selection and Application
MSS-SP 89	Pipe Hangers and Supports – Fabrication and Installation Practices
FEDSPEC WW-H-171e-78	Hangers and Supports, Pipe
MFMA-1-84	Metal Framing Standards Publication

INFORMATIONAL COPY ONLY - NOT FOR BIDDING

1.04 SUBMITTALS

A. The following submittals shall be provided in accordance with the Section 01 33 00, "Submittal Procedures":

1. Complete data and catalog cuts or drawings covering pipe supports.

2. Revisions to support systems resulting from changes in related piping system layout or addition of flexible joints.

3. Supporting calculations of piping supports and seismic bracing systems bearing the stamp of a Professional Engineer licensed in Washington State.

1.05 DESIGN REQUIREMENTS

A. General:

1. Seismic Load: Seismic design shall be based on factors given in the Structural General Notes found on the Drawings and Section 13 05 41, "Seismic Restraint Requirements for Nonstructural Components."

2. Design, furnish, and install all piping supports, hangers, and seismic bracing systems, regardless of whether these supports and systems are shown on the Drawings. Provide seismic bracing to prevent permanent displacement in any direction caused by lateral motion, overturning or uplift.

3. Supports are shown only where specific types and locations are required; additional pipe supports may be required at these locations.

4. Seismic Restraints: Contractor may use the latest edition of SMACNA/PPIC, "Guidelines for Seismic Restraints of Mechanical Systems and Plumbing Piping Systems" in lieu of engineering each application. Contractor shall use Hazard Level "A" as defined in the guidelines.

B. Pipe Support Systems:

1. Support Load: Dead loads imposed by weight of pipes filled with water, except air and gas pipes, plus insulation.

2. Safety Factor: Minimum of 5.

3. Maximum Support Spacing and Minimum Rod Size: Shall be in accordance with the requirements herein and the Contractor's design calculations. In case of conflict between these two, the most conservative span shall apply.

C. Framing Support System:

1. Beams: Size such that beam stress does not exceed 25,000 psi and maximum deflection does not exceed 1/240 of span.

2. Column Members: Size in accordance with manufacturer's recommended method.

3. Support Loads: Calculate using weight of pipes filled with water.

INFORMATIONAL COPY ONLY - NOT FOR BIDDING

D. Anchoring Devices: Design, size, and space support anchoring devices, including anchor bolts, inserts, and other devices used to anchor support, to withstand shear and pull-out loads imposed by loading and spacing on each particular support.

E. Vertical Sway Bracing: 10-foot-maximum centers or as shown on the Drawings.

1.06 HANGER AND SUPPORT SELECTION

A. Hanger and supports selection shall be based on the following:

1. Contractor shall review the piping layout in relation to the surrounding structure and adjacent piping and equipment before selecting the type of supports to be used at each hanger or support location.

2. Where a particular type of pipe support is generally shown on the Drawings, that particular design shall be used.

3. Where a particular pipe support arrangement is shown the Drawings, that particular arrangement shall be used at that location(s).

4. Hangers and supports shall withstand all static and dynamic conditions of loading to which the piping and associated equipment may be subjected to. As a minimum, the Contractor shall consider the following when designing and furnishing the pipe support and hanger systems:

   a. Weights of pipe, valves, fittings, insulating materials, suspended hanger components, and normal fluid contents.

   b. Weight of hydrostatic test fluid or cleaning fluid if normal operating fluid contents are lighter.

   c. Reaction forces due to test and operational conditions.

   d. Reaction forces due to operation of safety, relief, or other valves.

   e. Wind, snow, or ice loading on all outdoor piping.

5. Supports shall be designed to prevent transfer of the weight of piping, valves, and piping appurtenances to equipment piping connections. All adjacent supports at equipment connections to piping systems shall have provisions for vertical and horizontal adjustment. Two flexible piping connections not less than one pipe diameter apart shall be provided between piping supports and any equipment piping connection.

6. Hangers and supports shall be sized to fit the outside diameter of pipe, tubing, or the outside diameter of piping insulation.

7. Where negligible movement occurs at hanger locations, rod hangers shall be used for suspended lines, wherever practical. For piping supported from below, bases, brackets, or structural cross members shall be used.

8. Hangers for the suspension of 2-1/2 inches and larger piping and tubing shall be capable of vertical adjustment under full load conditions.

INFORMATIONAL COPY ONLY - NOT FOR BIDDING

9. Supporting systems shall provide for and control the free or intended movement of the piping including tilt movement in relation to that of the connected equipment.

10. Where there is horizontal movement at a suspended type hanger location, hanger components shall be selected to allow for swing. The vertical angle of the hanger rod shall not, at any time, exceed four degrees.

11. There shall be no contact between a pipe, hanger, or support components of dissimilar metals.

12. Design loads for inserts, brackets, clamps, and other support items shall not exceed the manufacturer's recommended loads.

13. Pump discharges shall have, as a minimum, a fixed anchor within five diameters from the discharge connection.

PART 2 – PRODUCTS

2.01 GENERAL REQUIREMENTS

A. When items specified or depicted in the manufacturer's standard details are not available, fabricate pipe supports material to the general configuration indicated by catalogs. All pipe supports shall include braces for seismic loadings.

2.02 PIPE SUPPORTS SCHEDULE

A. Material for supports and anchoring system shall be selected based on the following Support Schedule:

Description or Location	Type
Storage Building, Containers, Exterior:	Steel, Pre-Galvanized: ASTM A653 GR 33 with Pre-galvanized Finish: ASTM A653 G90 or Steel, Plain ASTM A1011 SS GR 33 with hot-dipped galvanized finish ASTM A123.

2.03 ISOLATION PADS

A. General: Furnish and install vibration isolation pads at the base of the air compressor.

B. Vibration Isolation Pads:

1. Type: Neoprene waffle.

2. Manufacturers and Products:

   a. Mason Industries, Type W.

   b. Korfund, Korpad 40.

   c. Or Approved Equal.

INFORMATIONAL COPY ONLY - NOT FOR BIDDING

2.04 CHANNEL TYPE SUPPORT SYSTEMS

A. Metallic Channel Strut and Support Materials:

1. Shall be in accordance with Paragraph 2.02.

2. Channel Size: 12-gauge, 1-5/8 inch by 1-5/8 inch or 3-1/4 inch (back-to-back) series.

   a. Use extended channel sizes 1-5/8 inch by 2-7/16 inch or 4-7/8 inch (back-to-back), as required when supporting flanged pipe.

3. Members and Connections: Design for all loads with safety factor of 5.

4. Approved Manufacturers:

   a. Unistrut; P1000, P1001, P5500 (extended channel), P5501 (extended channel).

   b. Or, Approved Equal.

B. Members and Connections: Design all supporting fittings, members and connections for the loads specified herein.

C. Strut Post Bases: Provide four-hole strut bases as specified below:

1. Metallic Struts: Shall be fabricated from galvanized steel, in accordance with Paragraph 2.02. Shall be Unistrut P2073A or Approved Equal.

D. Strut Pipe Straps: Unless otherwise shown on the Drawings, Contractor shall provide pipe straps and clamps in accordance with the following requirements. Contractor shall notify the Engineer if a conflict exists with the manufacturer's recommendations and the product selections below.

1. Single-Piece Perpendicular Strap: Shall be Single Piece Pipe Strap P2558 Series as manufactured by Unistrut, or Approved Equal.

2. Two Piece Perpendicular Strap: Shall be models P2024 through P2070-84 as manufactured by Unistrut, B2000 Series as manufactured by B-Line, or Approved Equal.

3. Parallel Strap: Shall be models P1563 through P1573 (Contractor to select appropriate size) as manufactured by Unistrut, or Approved Equal.

4. Tube Clamp: Shall be Cush-A-Clamp series as manufactured by Unistrut, or Approved Equal.

5. Dielectric Isolation Material: Shall be Unicushion P2600 Series as manufactured by Unistrut, or Approved Equal.

INFORMATIONAL COPY ONLY - NOT FOR BIDDING

E. General Strut Fittings: Contractor shall provide all additional fittings as required to fabricate the channel strut pipe support systems shown on the Drawings. All fitting materials provided for the metallic struts shall be in accordance with Paragraph 2.02.

F. Strut End Caps: Provide rubber end caps at the exposed ends of all channel struts, up to 7 feet above finished floor.

2.05 CONCRETE BASE

A. Pipe supports requiring a concrete base shall be designed and provided in accordance with the Structural General Notes found on the Drawings, including pipe support mounting requirements.

PART 3 – EXECUTION

3.01 GENERAL

A. Install hangers and supports in accordance with manufacturer's recommendations.

B. Supports for exposed piping shall conform to the latest requirements of the ANSI Code for Pressure Piping B31.1 and MSS Standard Practice SP-58, except as supplemented or modified by the requirements of this Specification.

C. Designs generally accepted as exemplifying good engineering practice, using stock or production parts, shall be utilized wherever possible.

3.02 SUPPORTS AND HANGERS:

A. All pipes and valves shall be secured in place by use of blocking, hangers, brackets, clamps or other approved methods, and the weight thereof shall be carried independently of pump casing or equipment only. Special hangers and supports are shown on the Drawings. The Contractor shall be responsible for determining the location of and providing all supports, including sway bracing. Hangers and supports shall be provided by the Contractor and shall be adequate to support the piping system, including seismic bracing in accordance to the seismic requirements in Section 13 05 41, "Seismic Restraint Requirements for Nonstructural Components." The Contractor shall provide pipe supports at intervals in compliance with the manufacturer's recommendations.

B. Hanger supports shall be as noted in the Drawing, with at least one support adjacent to the joint for each length of pipe, at change in direction and at branch connections. Sufficient hangers shall be provided to maintain proper slope without sagging.

C. Spacing of clamps for support of vertical piping shall be close enough to keep the pipe in alignment as well as to support the weight of the piping and contents, but in no case shall be more than 10 feet.

D. Provide adjustable hangers for all pipes, complete with adjusters, swivels, rods, etc. Size hangers to clear insulation and guide where required, as well as support piping. All rigid hangers shall provide a means of vertical adjustment after erection.

INFORMATIONAL COPY ONLY - NOT FOR BIDDING

E. Provide floor stands, wall bracing, concrete piers, etc., for all pipelines running near the floors or near walls and which can be properly supported or suspended by the walls or floors. Pipelines near concrete or masonry walls may also be hung by hangers carried from wall brackets at a higher level than pipe. Hanging of any pipe from another is prohibited.

F. Equipment shall be so positioned and aligned that no strain shall be induced within the equipment during or subsequent to the installation of pipework.

G. When temporary supports are used, they shall be sufficiently rigid to prevent any shifting or distortion of the piping or related work.

H. Pipe supports shall not be placed at a location which shall cause interference with the operation of valves, equipment, or other items that need to be accessed for regular operation and maintenance of the facility.

I. Do not install pipe supports and hangers in equipment access areas.

J. Install hangers and supports to allow controlled thermal and seismic movement of piping systems, to permit freedom of movement between pipe anchors, and to facilitate action of expansion joints, expansion loops, expansion bends, and similar units.

K. Install pipe anchors where required to withstand expansion thrust loads and to direct and control thermal expansion.

L. Intermediate and Pipe Alignment Guides:

   1. Provide pipe alignment guides (or pipe supports that provide the same function) at all expansion joints and loops.

   2. Guide piping on each side of an expansion joint or loop at 4 and 14 pipe-diameters from each joint or loop.

   3. Install intermediate guides on metal-framing support systems not carrying a pipe anchor or alignment guide.

M. Repair mounting surfaces to original condition after attachments are made.

N. Load Distribution: Install hangers and supports so piping live and dead loads and stresses from movement shall not be transmitted to connected equipment. Adjust hangers and supports as needed to distribute loads equally on attachments and to achieve indicated slope of pipe.

INFORMATIONAL COPY ONLY- NOT FOR BIDDING

O. Accessories:

1. Dielectric Barrier:

   a. Install between all carbon steel supports (including those with hot-dipped galvanized surfaces) and copper or stainless steel pipe.

   b. Install between stainless steel supports and dissimilar metal piping.

2. Electrical Isolation: Install 1/4-inch by 3-inch neoprene-rubber wrap between submerged metal pipe and oversized clamps.

P. Where sandblasting of pipe is required, sandblast prior to installation. Pipe shall not be sandblasted while on hangers or supports.

3.03 ANCHORAGE FOR BURIED PIPING

A. Bends and tees in buried pressure piping systems shall be anchored by means of restrained joints and thrust blocks per local standards. Restrained joint length shall be as required for the test pressure shown in Section 22 13 16.1, "Piping Schedule" for the piping system or local standards, whichever is greater. If the Contractor proposes alternative restraint methods, the Contractor shall submit calculations showing the type of restrained joint proposed and the length of restrained joint required.

END OF SECTION

INFORMATIONAL COPY ONLY - NOT FOR BIDDING

Division 23

Heating, Ventilating, and Air Conditioning (HVAC)

INFORMATIONAL COPY ONLY- NOT FOR BIDDING

SECTION 23 81 00

HVAC EQUIPMENT

PART 1 – GENERAL

1.01 WORK INCLUDED

A. Scope: This section covers supply and installation of heating, ventilation, and air conditioning equipment (HVAC) as shown on the Drawings and as specified herein.

1.02 SUBMITTALS

A. Submittals shall be provided in accordance with Section 01 33 00, "Submittal Procedures," and shall include the following:

1. Manufacturer's certificates of conformance and certified copies of test reports.
2. Documentation Including: Name of manufacturer, type and model, design rotative speed, BHP, rated motor HP, performance characteristics including capacity and pressures, materials used, weight of assembled unit, list of accessories to be furnished with unit, finish, and voltage.
3. Fabrication drawings for supports, vibration isolators, and similar items especially fabricated for this installation.
4. Complete assembly and installation drawings for each piece of rotating equipment.
5. Layout showing type, spacing, maximum loads, and materials of hangers supports.
6. Electrical wiring schematics indicating each terminal connection, unit symbol, and control description.
7. Manufacturer's warranty statements.
8. Operating and Maintenance Instructions (by the equipment supplier) for all pieces of rotating equipment including lubrication recommendations and spare parts lists.

1.03 QUALITY ASSURANCE

A. All equipment shall be either ETL or UL listed.

B. Fans shall be rated in accordance with AMCA Standards, and shall be licensed to bear the AMCA Certified Rating Label unless otherwise indicated.

C. Unitary A/C equipment shall be AHRI certified.

INFORMATIONAL COPY ONLY - NOT FOR BIDDING

PART 2 – PRODUCTS

2.01 ACCEPTABLE PRODUCTS

A. Acceptable manufacturers for each type of equipment are noted in this specification. The use of a manufacturer's name, model, size, or catalog number is for the sole purpose of establishing the standard of quality and general configuration desired. Engineer listing of the manufacturers and models does not guarantee compliance with the specified requirements. The Contractor is responsible to select equipment which meets the specified requirements.

B. Filters: Farr 30/30, American Air Filter or approved substitute.

C. Should equipment which differs from these specifications be offered and determined to be the approved equal of that specified, such equipment will be acceptable only on the basis that any revisions in the design and/or construction of the structure, piping, appurtenant equipment, electrical work, etc. required to accommodate such a substitution shall be made at no additional cost to the Owner and be as approved by the Owner's Representative.

2.02 GENERAL CONSTRUCTION REQUIREMENTS

A. Electric Motors: Motors shall conform to requirements in Division 26, State of Washington Nonresidential Energy Code, and the following:

1. Type: Squirrel cage, low starting current, induction type with starting torque characteristics suitable for equipment served. Constructed and rated in accordance with latest NEMA motor standards.

B. Vibration Isolators: All HVAC equipment shall be provided with vibration isolation. (See Section 3.02E.)

C. All equipment shall be provided with wall mounted disconnects installed adjacent to the unit. See Electrical Drawings.

D. Unit Mounted Disconnects: Switch shall be sized to withstand and/or interrupt the available fault current. If the integral disconnect is not capable of withstanding and/or interrupting the available fault current, then provide an external fusible disconnect switch per Division 26.

2.03 DUCTLESS SPLIT SYSTEM HEAT PUMP

A. Split system heat pump shall be Mitsubishi MSZ-FH/MUZ-FH series rated for 12,000 Btu/hr cooling and 13,600 Btu/hr heating capacity. Unit shall maintain 100 percent heating capacity at 5 degrees F and 62 percent at -13 degrees F.

1. Rated conditions (Cooling):

a. Indoor: 80 degrees F DB, 67 degrees F WB.

b. Outdoor: 95 degrees F DB, 75 degrees F WB.

INFORMATIONAL COPY ONLY - NOT FOR BIDDING

2. Rated conditions (Heating):

   a. Indoor: 70 degrees F DB, 60 degrees F WB.

   b. Outdoor: 5 degrees F DB, 5 degrees F WB.

B. Features shall include: Zone control; automatic fan speed control; hard-wired, wall-mounted remote controller (PAR-21MAA); and auto changeover for cooling and heat.

C. Refrigerant Type: 410a.

D. Indoor unit shall include platinum deodorizing and anti-allergy enzyme filter for a complete air purifying system.

E. Noise Level: 49 dB Max.

F. SEER: 23.

G. HSPF (47 Degrees F): 10.

H. Electrical Requirements: 208V, single-phase.

I. Warranty: 5 years on parts and defects, 7 years on compressor.

J. Provide integral 208V disconnect switch which is sized to withstand and/or interrupt the available fault current. If the integral 208V disconnect is not capable of withstanding and/or interrupting the available fault current, then provide an external fusible disconnect switch per Division 26.

2.04 UNIT HEATER:

A. The Storage Room heaters shall be King model KB Series, constructed with 20 gauge, electrogalvanized steel with a rust inhibiting baked enamel finish. Heaters to be rated for 7.5 KW 480V 3 phase with integral thermostat and wall-mount bracket.

B. Equipment Features:

   1. Unit Heater Cabinet:

      a. Adjustable discharge louvers mounted horizontally across the cabinet discharge opening.

      b. Constructed to incorporate a means for mounting the unit heater by either suspension rods or mounting brackets.

      c. Fan Motor:

         1) The fan motor permanently lubricated and thermally protected.

      d. Heating Coil:

         1) Spiral steel fin element.

INFORMATIONAL COPY ONLY - NOT FOR BIDDING

C. Controls:

1. The controls shall include:

a. Power contactor.

b. Automatic over-temperature cutout.

c. Manual over-temperature reset.

d. Fused transformer for control circuit.

e. Each unit heater shall be provided with an adjustable, integral thermostat.

2.05 CENTRIFUGAL SIDEWALL EXHAUST FAN

A. Fan shall be wall mounted, up-blast, centrifugal-type fan, Greenheck CW Series or approved equal. Fan shall be rated for a capacity of 760 CFM at 0.5 inches w.c. Fan shall be 120 volt single phase with 0.25 hp variable speed motor.

B. Drive: Direct-driven fan with speed controller, suitable for installation as shown on the Drawings. Contractor is responsible to provide necessary integral controls to produce the specified fan capacity. Fan shall be single point connection to electrical service in the field.

C. Housing: Heavy gauge, spun aluminum with a rigid internal support structure. Motor shall be mounted out of the airstream on vibration isolators. Motor shall be readily accessible for maintenance.

D. Fan curve shall have no points of reverse slope inflection.

E. Fan shall be controlled with a remote thermostat.

F. Fan Wheel: Non-overloading, backward-inclined, constructed of aluminum.

G. Noise Level: Sound level shall not exceed 59 dBA at the inlet when operating at rated capacity.

H. Birdscreen: Galvanized; mounted to the discharge perimeter.

I. Disconnect: See Electrical.

J. Electrical Requirements: As Scheduled.

K. Coating: Factory applied. Suitable for outdoor installation. Earth-tone color. Submit color option to Owner's Project Representative for selection.

L. Accessories: Factory supplied wall grille.

INFORMATIONAL COPY ONLY - NOT FOR BIDDING

2.06 INSTRUMENTS

A. All control system components shall be of the latest, state of the art, in manufacture and performance.

B. Wall Thermostats: Wall thermostats shall be of the modulating electric type. Thermostats shall be located as indicated on the Drawings and shall have ranges to suit conditions shown on the Drawings. All thermostats shall have exposed adjustment dials and a thermometer on the front face. Mounting height shall be 5 feet above finished floor. An insulating back shall be provided where exterior wall mounting is indicated. Guards shall be provided for room thermostats installed in areas other than administrative offices or control rooms. The minimum temperature range of heater wall thermostats shall be 40 degrees F to 70 degrees F in unoccupied rooms. The minimum range for fan wall thermostats shall be 70 degrees F to 95 degrees F.

C. Fan Speed Controller: The fan motor shall be an electronically commutated (EC) type with motor-mounted speed control. EC motor shall be specifically designed for fan applications. Motors shall be permanently lubricated with heavy-duty ball bearings to match the fan load and prewired to the specified voltage and phase. Motor shall be no less than 85 percent efficient at all speeds.

2.07 MISCELLANEOUS

A. Penetrations/Openings:

1. Seal space around HVAC penetrations (ducts, drains, refrigerant, etc.) in walls, ceilings, or floors.

2. Densely pack void space with loose fill fiberglass insulation. Install galvanized iron frame at each side of opening to cover edges of duct openings. Frame shall be field painted consistent with the coating specification section.

PART 3 – EXECUTION

3.01 CODES, ORDINANCES, STANDARDS AND PERMITS

A. Comply with all local, state, and national code restrictions and requirements. In case of conflict between the Contract Documents and a governing code, the higher standard shall prevail. Extra payment will not be allowed for work or changes required by local code enforcement authorities.

3.02 INSTALLATION

A. Installation shall be in strict accordance with the manufacturer's requirements. Units shall be level and aligned as shown on the Drawings. Units shall be installed in locations shown on Drawings and as detailed. Units shall be supported and braced as required or as detailed on the Drawings and to be level and aligned as shown on the Drawings. Power hook-up shall be by the Contractor.

INFORMATIONAL COPY ONLY - NOT FOR BIDDING

B. Location and Access: Observe good common practice in locating and installing mechanical equipment and accessories so that completed installation presents the least possible hazard. Maintain adequate clearances to all fixtures, valves, and equipment so as to permit ready access to all parts requiring adjustments, inspection, service, and repair. Installation of any equipment with less than minimum clearances indicated by manufacturer as required for proper maintenance will not be accepted.

C. Connections: Indicated equipment connections are necessarily based on equipment of a given manufacturer. Contractor assumes responsibility for proper arrangement of ducts, pipes, valves, power connections, etc., to connect approved equipment in a proper and approved manner. Follow equipment manufacturer's detailed instructions and recommendations in the installation and connection of all equipment. No equipment installation or connections shall be made in a manner that voids the manufacturer's warranty. Fans shall have flexible connections at each duct connection. Route all drains outside of buildings.

D. Miscellaneous Hardware:

1. Provide all required trim including sturdy and adequate bases or support systems; braces; supports; inserts; flashing; floor, ceiling, and wall plates; valves; fittings; sleeves; accessories; etc., necessary for a complete installation.

E. Vibration Isolation:

1. General: Mount all rotating or reciprocating mechanical equipment to be isolated from the building structure by vibration isolators.

3.03 TESTING

A. Subsequent to installation, the Contractor shall perform functional tests and start-up for a minimum period of 3 days with various thermostat settings to assure proper operation over the full design range.

B. Following completion of the 3-day functional tests and start-up, the Contractor, in the presence of the Project Representative, shall use an air flow meter to confirm the fan and unitary equipment are operating at the flows specified.

3.04 FINAL ADJUSTMENTS

A. Direction of Rotation: Check direction of equipment rotation against that marked on it.

B. Alignment: Check and adjust alignment between motor/drive/equipment.

C. Bolt Tension: Check and tighten as required.

D. Record: Submit complete record of all data concerned with testing and balancing to Owner's Representative.

E. Required Data: Minimum information includes exact motor loadings and overload heater sizes, fan RPM and drive sizes, airflow in CFM at ALL ventilation openings, inlet and outlet

INFORMATIONAL COPY ONLY - NOT FOR BIDDING

temperature of unitary equipment (for both cooling and heating modes) and outdoor weather conditions at time of test.

3.05 TRAINING, OPERATION, AND MAINTENANCE

A. Provide 2 hours of on-site training to operators on system operation, maintenance, and troubleshooting.

END OF SECTION

INFORMATIONAL COPY ONLY - NOT FOR BIDDING

This Page Intentionally Left Blank

INFORMATIONAL COPY ONLY - NOT FOR BIDDING

Division 26

Electrical

INFORMATIONAL COPY ONLY- NOT FOR BIDDING

SECTION 26 05 11

GENERAL REQUIREMENTS FOR ELECTRICAL INSTALLATION

PART 1 – GENERAL

1.01 SUMMARY

A. Section includes common requirements for work specified in Division 26.

B. Provide all required permits, inspections, labor, project equipment and materials, tools, construction equipment, safety equipment, transportation, and test equipment and satisfactorily complete all electrical work shown on the Drawings included in these Specifications, or required for a complete and fully operating facility. In addition, provide complete electrical installation including wiring and raceways for the equipment that will be provided under all divisions of these Specifications.

C. Provide complete electrical installation including wiring and raceways for the Instrumentation and Controls specified in Division 40, "Process Integration."

D. Auxiliary Devices: Provide raceway and wire for power and control for all auxiliary devices such as thermostats, heating and cooling controls, motor temperature switches and sensors, solenoid valves, pressure switches, and instruments that are included as part of manufacturer's packaged systems specified in other divisions. Contractor shall be responsible for conduit and wire to these auxiliary devices even if not specifically shown on the Drawings or specified herein.

E. Work Specified in Other Divisions: Providing instruments and other equipment specified in Division 40, "Process Integration."

1.02 RELATED SECTIONS

A. The work of all sections within Division 26 is related to the work of this section. Other sections may also be related to the proper performance of this work. It is the Contractor's responsibility to perform all the work required by the Contract Documents.

1.03 REFERENCE STANDARDS

A. This section incorporates by reference the latest revision of the following documents. These references are a part of this section as specified and modified. In case of conflict between the requirements of this section and those of a listed document, the requirements of this section shall prevail.

1. IEEE 242, Protective Device Coordination.

2. WAC 296-46B-999 Electrical Testing Laboratory Requirements.

3. WAC 296-46B Electrical Safety Standards, Administration, and Installation.

INFORMATIONAL COPY ONLY - NOT FOR BIDDING

4. NFPA 70: National Electric Code (NEC)

5. NETA: International Electrical Testing Association. Use latest version of NETA test specifications. NETA references included in this section are based on the 2013 NETA Acceptance Testing Specification.

1.04 DEFINITIONS

A. Locations:

1. General: Use equipment, materials, and wiring methods suitable for the types of locations in which these items are located.

2. Unless otherwise shown on Drawings, the following definitions of Location Types shall apply:

   a. Dry Locations: Indoor areas which do not fall within the definitions below for Wet, Damp, Hazardous, or Corrosive Locations.

   b. Wet Locations:

      1) Outdoor locations.

      2) Locations exposed to the weather, whether under a roof or not.

      3) Areas designated as Wet Locations by applicable codes and regulations, unless otherwise designated on the Drawings.

      4) Indoor process equipment locations exposed to splashing, dripping or hose-down. Note that hose-down locations include those locations likely to be cleaned or washed during normal operations. These locations include chemical storage and loading areas and other areas where hose bibs are installed to facilitate hose-down.

   c. Damp Locations: Spaces wholly or partially underground, or having a wall or ceiling forming part of a channel or tank, or designated as Damp Locations by applicable codes and regulations, unless otherwise designated on the Drawings.

   d. Corrosive Locations: Areas where corrosive materials are stored or processed. These areas are shown on the Drawings.

   e. Hazardous (Classified) Locations: Hazardous (Classified) Locations per the NEC.

   f. Where conflicting requirements are encountered in the determination of Location Type assume a Location Type which results in the use of the highest cost, highest performance, most protective equipment, materials, and wiring methods suitable for the given location. Request guidance from the Engineer to resolve the conflicting requirements.

INFORMATIONAL COPY ONLY - NOT FOR BIDDING

1.05 SUBMITTALS

A. Procedures: Section 01 33 00, “Submittal Procedures.”

B. Organization:

1. Submit a single, complete submittal package for each section in Division 26. Submittal package shall be organized by product type. Include tabbed separators or equivalent means of identifying each product section per the product item number.

2. Bill of Material (BOM): BOM shall include product item number, quantity, manufacturer, part number, model number, descriptions, and a cross-reference to the appropriate Contract Specification paragraph.

C. Content Definitions:

1. Catalog Cut Sheets: Include all relevant product information from the manufacturer that is necessary to show compliance to the Contract Specifications including model numbers, product technical specifications, ratings, range, weight, accuracy, diagrams, application information, etc. For each product type, indicate the method by which the product conforms to the requirements of 296-46B-010 (8) or meets the exceptions in RCW 19.28.

2. Nameplate Schedules: Schedule shall include location, size of nameplate, letter size, and nameplate text.

3. Shop Drawings: Show dimensions, physical configurations, methods of connecting equipment, mounting details, and wiring schematics. Drawings shall be complete with device numbers, wire numbers, and terminal board numbers. Submit fabrication details and nameplate legends. Include material lists and/or bills of material. Submit manufacturer’s catalog cuts for each item for which Shop Drawings are not required. Manufacturers’ catalog cuts, specifications, or data sheets shall be clearly marked to delineate the options or styles to be furnished.

4. Factory Tests: Submit reports of factory tests and adjustments performed by equipment manufacturers to the Engineer prior to field-testing and adjustment of the equipment.These reports shall identify the equipment and show dates, results of tests, measured values, and final adjustment settings. Provide factory tests and adjustments for equipment where factory tests are specified in the equipment Specifications.

5. Record Drawings: Prior to final acceptance, deliver one complete set to the Engineer for review. Final acceptance will not be granted until favorable review is completed.

   a. Submittal Drawings: Revise manufacturer’s shop drawings to show any construction changes. After favorable review, provide copies of all CADD-produced drawings on magnetic media satisfactory to the Engineer in AutoCAD format.

   b. Contract Drawings: Provide contract Record Drawings in accordance with Paragraph 1.05.B below and Division 01, “General Requirements.”

INFORMATIONAL COPY ONLY - NOT FOR BIDDING

6. Operation and Maintenance Manuals:

   a. Furnish operation and maintenance (O&M) manuals for equipment where manuals are specified in the equipment specifications. Submit manuals in accordance with the requirements of Division 01, “General Requirements.”

   b. In each manual, include equipment descriptions, Record Shop Drawings, operation and maintenance instructions, parts ordering data, and ratings for the equipment furnished for this project.

7. Spare Parts: For each piece of equipment, submit a list of recommended spare parts. Include part numbers and the name, address, and telephone number of the supplier.

D. Product Identification: All submittal information shall be edited to show only the specific products, model numbers, and information which apply to the Contract Drawings and Specifications. Examples of methods which could be used to provide submittal clarity include “arrow” markings which point to specific model numbers and “cross-out” markings which serve to eliminate sections of non-applicable product information.

1.06 QUALITY ASSURANCE

A. Codes:

1. Electrical equipment and materials, and equipment specified in or required by other divisions including installation and testing, shall conform to the latest adopted edition of the following codes:

   a. National Electrical Code (NEC).

   b. National Electrical Safety Code (NESC).

   c. Occupational Safety and Health Act (OSHA) standards.

   d. Applicable Washington State and local electrical and equipment safety regulations and codes including WAC 296-46B and RCW 19.28.

   e. Washington Occupational Safety and Health Division (WISHA).

   f. International Electrical Testing Association (NETA), Acceptance Testing Specifications (ATS).

2. Variances: In instances where two or more codes are at variance, the most restrictive requirements shall apply and in all cases, the resolution and installation must meet the requirements of the Authority Having Jurisdiction (AHJ).

B. Standards: Equipment shall conform to applicable standards of American National Standards Institute (ANSI), Electronics Industries Association (EIA), Institute of Electrical and Electronics Engineers (IEEE), and National Electrical Manufacturers Association (NEMA). The revisions of these standards in effect on the date of issuance of the Contract Documents shall apply.

INFORMATIONAL COPY ONLY - NOT FOR BIDDING

C. Conformance to acceptable standards, listing, or field inspection of all equipment and materials specified in Division 26, “Electrical” and Division 40 “Process Integration” and all other divisions is required when indicated by the NEC, applicable safety codes, Washington State electrical and safety codes (including WAC 296-46B-010 [8]) and RCW 19.28, state and local electrical codes and regulations, and meeting the requirements of the Authority Having Jurisdiction (AHJ).

1. Examples of possible methods for meeting this requirement include the use of Underwriters Laboratories (UL) listed products and the UL 508 and UL 698 labeling of custom control assemblies.

2. The Contractor is responsible for determining whether the products and materials supplied meet these regulations and provide replacement with acceptable equipment, field inspection and labeling, or engineering evaluation to the satisfaction of the AHJ.

3. In the case of equipment and materials specified in Division 26, “Electrical” and other divisions with no substitutions allowed, the Contractor is responsible to supply the equipment in a configuration that meets the requirements of the AHJ through listing, field labeling, or other methods deemed acceptable by the AHJ.

4. The Contractor is responsible for all costs including modifications, engineering services, inspections, and labeling to satisfy the AHJ.

5. The terms Listed and UL Listed when used in this specification are requirements that the product be listed as defined in WAC 296-46B and meets all WAC, local, and AHJ requirements for listing by an approved Nationally Recognized Testing Laboratory (NRTL). Where the product is specified as Listed, substitution with products or materials that otherwise meet the requirement through field inspection or other means is not acceptable unless no listed product is available. The Listed specification requirement, where indicated, does not exempt other products and materials, where not indicated, from the requirements of this paragraph.

D. Provide equipment with placards and labels (e.g., service entrance labels) where the NEC, WAC, local, and AHJ requirements require such labels.

E. Series short circuit ratings for protective devices are not allowed.

1.07 DRAWINGS

A. Drawings: The Electrical Drawings are diagrammatic; exact locations shall be verified in the field, coordinated with other trades and existing work, and verified with the Engineer where indicated. Except where special details are used to illustrate the method of installation of a particular piece or type of equipment or material, the requirements or descriptions in this specification shall take precedence in the event of conflict.

1. Locations of equipment, inserts, anchors, motors, panels, pull boxes, manholes, conduits, stub-ups, fittings, lighting fixtures, power and convenience outlets, exterior lighting units and ground wells are approximate unless dimensioned; verify locations with the Engineer prior to installation.

INFORMATIONAL COPY ONLY - NOT FOR BIDDING

2. Field-verify scaled dimensions on Drawings.

3. Review the drawings and specification divisions of other trades and perform the electrical work that will be required for the installations.

4. Should there be a need to deviate from the electrical drawings and specifications, submit written details and reasons for all changes to the Engineer for favorable review.

5. Resolution of conflicting interpretations of the Contract Documents shall conform to Division 01 "General Requirements."

6. Any required adjustment to the locations shown to conform to actual equipment provided, required for coordination with other trades, or required to conform to final installation locations, or resulting from adjustments or changes initiated by the Contractor shall be the responsibility of the Contractor.

7. Adjustments to the locations shown on the electrical drawings of up to 10 feet in any direction (including vertical) required to complete the installation are the responsibility of the Contractor.

B. Record Drawings:

1. Maintain a complete and accurate record set of Drawings for the electrical construction work.

2. Record all work that is installed differently than shown on the Drawings.

3. Upon completion of the work, transfer all marked changes to a clean set of full-size Drawings with red ink. Mark the Drawings "RECORD DRAWINGS" and submit them to the Engineer when the electrical work is completed, in accordance with Division 01, "General Requirements."

4. Locate all underground conduits by accurate field measured dimensions from walls and corners, etc., of surrounding structures or other permanent facilities.

1.08 SITE CONDITIONS COORDINATION

A. General:

1. Ambient Outdoor Temperature Range: -25 to 115 degrees F.

2. Altitude: 1300 feet above sea level.

3. Solar: Assume full solar gain for outdoor enclosures.

B. Coordinate the electrical work with the other trades, code authorities, utilities, and the Owner.

C. Where connections must be made to existing installations, properly schedule all the required work, including the power shutdown periods. Schedule and carry out shutdowns so as to cause the least disruption to operation of the plant and privately owned facilities.

INFORMATIONAL COPY ONLY - NOT FOR BIDDING

D. When two trades join together in an area, make certain that no electrical work is omitted.

E. Seismic – Equipment and Supports: Anchored and braced per Section 13 05 41, “Seismic Restraint Requirements for Nonstructural Components.”

1.09 JOB CONDITIONS

A. Operations:

1. Keep all power shutdown periods to a minimum.

2. Carry out shutdowns only after the schedule has been favorably reviewed by the Engineer.

B. Construction Power:

1. Make all arrangements for the required construction power.

2. When required, provide all equipment, materials, and wiring in accordance with the applicable codes and regulations.

3. Upon completion of the project, remove all temporary construction power equipment, material, and wiring from the site as the property of the Contractor.

C. Storage: Provide adequate storage for all equipment and materials that will become part of the completed facility so that it is protected from weather, dust, water, or construction operations.

1.10 ELECTRICAL SERVICES

A. Provide all the equipment and materials not provided by the utility companies for permanent electrical service at the locations shown on the Drawings and described hereinafter. All work shall meet the requirements of the serving utility companies.

B. Coordinate all work with the serving utilities, obtain the required inspections, and notify the respective utility when service is required.

C. Provide Utility CT Enclosure and associated Meter Base. NEMA 3R construction. Submit Drawings associated with these components.

D. Utility fees associated with the electrical service will be paid by the Owner.

E. The estimated size of the electrical load for the VTT and LTT containers must be submitted and receive favorable review prior to procuring equipment and providing services related to the electrical service. See Section 13 34 20.

1.11 DAMAGED PRODUCTS

A. Notify the Engineer in writing in the event that any equipment or material is damaged.

B. Obtain prior favorable review by the Engineer before making repairs to damaged products.

INFORMATIONAL COPY ONLY - NOT FOR BIDDING

PART 2 – PRODUCTS

2.01 STANDARD OF QUALITY

A. Products that are specified by manufacturer, trade name, or catalog number establish a standard of quality and do not prohibit the use of equal products of other manufacturers provided the products are favorably reviewed by the Engineer prior to installation.

B. It is the intent of these Specifications and Drawings to secure high quality in all materials and equipment in order to facilitate operation and maintenance of the facility. All equipment and materials shall be new and the products of reputable suppliers having adequate experience in the manufacture of these particular items. For uniformity, only one manufacturer will be accepted for each type of product. All equipment shall be designed for the service intended and shall be of rugged construction and of ample strength for all stresses that may occur during fabrication, transportation, erection, and continuous or intermittent operation. All equipment shall be adequately stayed, braced, and anchored and shall be installed in a neat and workmanlike manner. Appearance and safety, as well as utility, shall be given consideration in the design of details.

C. All components and devices installed shall be standard items of industrial grade or better, unless otherwise noted, and shall be of sturdy and durable construction suitable for long, trouble-free service. Light-duty, fragile, and commercial grade devices of doubtful durability shall not be used.

2.02 FASTENERS

A. Fasteners for securing equipment to walls, floors, and the like shall be either hot-dip galvanized after fabrication or stainless steel. Provide stainless steel fasteners in corrosive locations. When fastening to existing walls, floors, and the like, provide capsule anchors, not expansion shields. Size capsule anchors to meet load requirements. Minimum size capsule anchor bolt is 3/8 inch.

2.03 PAINTING AND COATING

A. Equipment: Refer to each electrical equipment section of these Specifications for painting and coating requirements of equipment and enclosures. Repair any final finish that has been damaged or is otherwise unsatisfactory using touchup materials approved by the manufacturers, to the satisfaction of the Engineer.

PART 3 – EXECUTION

3.01 REQUIREMENTS

A. All electrical installations shall conform to the codes and standards identified in this section.

INFORMATIONAL COPY ONLY - NOT FOR BIDDING

3.02 WORKMANSHIP

A. Assign a qualified representative who shall supervise the electrical construction work from beginning to completion and final acceptance.

B. Perform all labor using qualified craftsmen who have had experience on similar projects. Provide first-class workmanship for all installations.

C. Ensure that all equipment and materials fit properly where installed.

D. Perform any required work to correct improperly fit installations at no additional expense to the Owner.

3.03 EXCAVATION AND BACKFILL

A. Perform all required 'locates' and obtain confirmation codes per RCW 19.122 and local codes and regulations including any advanced notice or timing requirements. Locates are defined as utility location requests, marking, and ongoing maintenance of marks as required during the project construction period. Schedule and cost impacts due to required utility location activities and requests are the responsibility of the Contractor. Provide location confirmation codes to the Owner and Engineer at least 48 hours before beginning any excavation.

B. Provide the excavations for electrical equipment foundations and trenches for conduits as required and as shown on the Drawings.

C. Refer to Division 31, "Earthwork," of these Specifications for all excavation and backfilling work.

3.04 CONCRETE

A. Where shown on the Drawings or specified, provide the required concrete installations for conduit encasement and equipment foundations.

B. Refer to Division 03, "Concrete" of these Specifications for all concrete work.

3.05 INSTALLING EQUIPMENT

A. Provide the required inserts, bolts, and anchors, and securely attach all equipment and materials to the supports.

B. Install all floor-mounted equipment on 4-inch-high reinforced concrete pads. The Contractor, suppliers, and fabricators shall take this requirement into consideration when designing, fabricating, and installing panels, motor control centers, and other enclosures so that height above the floor of the operating handles of electrical devices meets the requirements of these Specifications and applicable codes. Equipment anchor bolts shall extend through the 4-inch-high reinforced concrete pad and shall be anchored into the floor beneath the pad.

INFORMATIONAL COPY ONLY - NOT FOR BIDDING

3.06 CUTTING, DRILLING, AND WELDING

A. Provide any cutting, drilling, and welding that is required for the electrical construction work.

B. Structural members shall not be cut or drilled, except when favorably reviewed by the Engineer. Use a core drill wherever it is necessary to drill through concrete or masonry.

C. Provide the required welding for equipment supports. Conduits and fittings shall not be welded to structural steel.

D. Perform patchwork with the same materials as the surrounding area and finish to match, as specified in Division 03, “Concrete” of these Specifications.

3.07 FIELD TESTS

A. General:

1. Contractor shall use NETA Acceptance Testing Specifications (ATS) for all new equipment installed under this Contract and NETA Maintenance Testing Specifications (MTS) for all existing equipment reused under this Contract unless otherwise directed by the Project Representative.

2. Give a minimum of 5 working days of notice to the Engineer prior to any test to permit witnessing the test.

3. Testing Contractor shall be NETA certified and shall submit copy of certification for favorable review prior to testing.

4. Record test measurements on applicable NETA test report forms.

5. Prepare and submit a Test Report per NETA standards summarizing the final test procedures and test results.

B. The Contractor shall provide all materials, equipment, labor, and technical supervision to perform such tests and inspections. It is the intent of these tests to ensure that all electrical equipment is operational within industry and manufacturer tolerances and is installed in accordance with the Contract Documents and manufacturer’s instructions. The tests and inspections shall determine the suitability for energization.

C. Retesting will be required for all unsatisfactory tests after the equipment or system has been repaired. Retest all related equipment and systems if required by the Engineer.

D. Tests:

1. Testing shall include the tests specified in Division 26 equipment specifications.

2. Insulation Resistance, Continuity, and Rotation:

a. Perform routine insulation resistance, continuity, and rotation tests for all distribution and utilization equipment including all motors, 1/2 horsepower and larger, prior and in addition to tests specified herein.

INFORMATIONAL COPY ONLY - NOT FOR BIDDING

b. Any system material or workmanship that is found defective on the basis of acceptance tests shall be reported directly to the Engineer.

c. The Contractor shall maintain a written record of all tests and upon completion of project, assemble and certify a final test report.

3. Motor Current: Measure and record current in each phase for each new motor over 5 hp. Include measurement of the motor terminal voltages and motor currents when the motor is being operated at normal operating loads. For motors that are fed by variable frequency drives, use true-rms-reading instruments in making test measurements.

4. Operational Tests: Operationally test all circuits to demonstrate that the circuits and equipment have been properly installed, adjusted, and are ready for full-time service. Demonstrate the proper functioning of circuits in all modes of operation including alarm conditions, and demonstrate satisfactory interfacing with the data acquisition and alarm systems.

3.08 EQUIPMENT PROTECTION

A. Exercise care at all times after installation of equipment, motor control centers, etc., to keep out foreign matter, dust, dirt, debris, or moisture. Use protective sheet metal covers, canvas, heat lamps, etc., as needed to ensure equipment protection.

3.09 CLEANING EQUIPMENT

A. Thoroughly clean all soiled surfaces of installed equipment and materials.

B. Clean out and vacuum all construction debris from all equipment.

C. Clean out and vacuum air insulated bus assemblies and exposed electrical terminals of panelboards, load centers, motor control centers, switchboards, and other enclosed electrical equipment before energizing.

D. Provide and touch up, to original condition, any factory finish or coating that has been marred or scratched during shipment or installation, using paint furnished by the equipment manufacturer.

3.10 CLEANUP

A. Upon completion of the electrical work, remove all surplus materials, rubbish, and debris that accumulated during the construction work. Leave the entire area neat, clean, and acceptable to the Engineer.

END OF SECTION

INFORMATIONAL COPY ONLY - NOT FOR BIDDING

This Page Intentionally Left Blank

INFORMATIONAL COPY ONLY - NOT FOR BIDDING

SECTION 26 05 19

LOW-VOLTAGE ELECTRICAL POWER CONDUCTORS AND CABLES

PART 1 – GENERAL

1.01 SECTION INCLUDES

A. This section specifies conductors and cables rated 600 V used for power, lighting, and receptacle circuits.

1.02 RELATED SECTIONS

A. The work of the following sections is related to the work of this section. Other sections, not referenced below, may also be related to the proper performance of this work. It is the Contractor's responsibility to perform all the work required by the Contract Documents.

1. Section 26 05 11, "General Requirements for Electrical Installation."

2. Section 26 05 53, "Identification for Electrical Systems."

3. Section 40 95 73, "Process Control Wiring."

1.03 REFERENCE STANDARDS

A. This section incorporates by reference the latest revision of the following documents. These references are a part of this section as specified and modified. In case of conflict between the requirements of this section and those of a listed document, the requirements of this section shall prevail.

1. ASTM B3-74: Specification for Soft or Annealed Copper Wire.

2. ASTM B8-77: Specification for Concentric Lay Stranded Copper Conductors, Hard, Medium-Hard, or Soft.

3. ASTM B173-71: Specification for Rope Lay Stranded Copper Conductors Having Concentric-Stranded Members.

4. ICEA S-66-524: Cross Linked Thermosetting Polyethylene Insulated Wire and Cable.

5. NEMA MG1: Motors and Generators.

6. NETA ATS: Acceptance Testing Specifications for Electrical Power Distribution Equipment and Systems (ATS-2009), International Electrical Testing Association Inc. (NETA).

7. UL 44: Thermoset Insulated Wires and Cables.

8. UL 62: Flexible Cord and Fixture Wire.

INFORMATIONAL COPY ONLY - NOT FOR BIDDING

9. UL 83: Thermoplastic Insulated Wires and Cables.

10. UL 510: Polyvinyl Chloride, Polyethylene, and Rubber Insulating Tape.

11. UL 719: Nonmetallic Sheathed Cables.

12. UL 1063: Machine-Tool Wires and Cable.

13. UL 1277: Electric Power and Control Tray Cables.

1.04 SUBMITTALS

A. As specified in Section 26 05 11, "General Requirements for Electrical Installation."

B. Submit catalog cut sheets.

C. Submit insulation test results.

PART 2 – PRODUCTS

2.01 CONDUCTORS

A. General: All conductors shall be copper. Wire or cable not specifically shown on the Drawings or specified, but required, shall be of the type and size required for the application and in conformance with the applicable code. All insulated conductors shall be identified with printing colored to contrast with the insulation color.

B. Power and Control Conductors, 600 V and Below:

1. No. 14 AWG and larger shall be 600 V, copper, stranded, Type XHHW-2, 90 degrees C wet/dry cross-linked polyethylene in accordance with NEMA WC57/ICEA S-73-532 (control cable), NEMA WC70/ICEA S-95-658 (power cable).

2. Fixture wire shall be 600 V, silicone rubber insulated, 200 degrees C, UL Type SF-2, with stranded copper conductors.

3. Flexible cords and cable shall be 600 V, Type SOOW with ethylene-propylene-rubber insulation, in accordance with UL 62. Rated for Extra Hard-Usage. Shall conform to physical and minimum thickness requirements of NEMA WC 8.

4. Cords shall be 600 V, 2-conductor plus ground, Type SO, hard service, of adequate length and with grounding type plug attached, rated in amperes as shown on the Drawings.

5. Manufacturers: Houston Wire and Cable, Southwire, Okonite, or equal.

INFORMATIONAL COPY ONLY - NOT FOR BIDDING

2.02 TYPE TC CABLE

A. Type TC-Power Cable:

1. Description: Multiconductor power cable, No. 8 AWG minimum through 500 kcmil, approved for tray installation and in accordance with UL 1277.

B. Type TC-Control Cable:

1. Description: Multiconductor control cable, No. 10 AWG through No. 14 AWG, approved for tray installation and in accordance with UL 1277.

C. Voltage: 600 V.

D. Conductor Material: Bare annealed copper; stranded in accordance with ASTM B8.

E. Insulation: XHHW-2, 90 degree C dry, 75 degree C wet, crosslinked polyethylene in accordance with NEMA WC57/ICEA S-73-532 (control cable), NEMA WC70/ICEA S-95-658 (Power Cable), and UL 44.

F. Assembly: Individual conductors cabled together with nonhydroscopic fillers and binding tape.

G. Jacket: 50-mil minimum, polyvinylchloride (PVC) in accordance with UL 1581.

H. Flame resistance: IEEE 383.

I. Manufacturer: Southwire, Okonite, General, Houston Wire & Cable or equal.

J. Ratings: Cable Tray; conduit; direct burial; Class 1, Division 2; direct sunlight.

K. Minimum bend radius shall be no greater than 6 times cable diameter.

2.03 SPLICES AND TERMINATIONS OF CONDUCTORS

A. Splices:

1. Wire and Cable Splicing Materials and Applications:

a. For Lighting Systems and Power Outlets: Wire nuts shall be twist-on type insulated connectors utilizing an outer insulating cover and a means for connecting and holding the conductors firmly. Wire nuts shall be suitable for connecting two to four copper conductors of No. 14 or No. 12 AWG size or two or three No. 10 AWG copper conductors.

b. All Equipment: Crimp-type connectors shall be insulated type, suitable for the size and material of the wires and the number of wires to be spliced and for use with stranded conductors.

INFORMATIONAL COPY ONLY - NOT FOR BIDDING

c. Equipment and Power Conductors: Bolted pressure connectors shall be suitable for the size and material of the conductors to be spliced. Connectors shall be of the split bolt or bolted split sleeve type in which the bolt or setscrew does not bear directly on the conductor.

d. All Equipment: Epoxy splice kits shall include epoxy resin, hardener, and mold, and shall be suitable for use in wet locations and hazardous locations.

e. All wire and cable splicing materials shall be UL Listed.

2. Terminal Cabinets: Termination system shall include insulated, crimp-type connectors. Coordinate the lug and boards for correct fit. All terminations shall include marker sleeves.

B. Terminations:

1. Low-Voltage Terminations:

a. Crimp-type terminals shall be Listed, self-insulating sleeve type, with ring or rectangular type tongue, suitable for the size and material of the wire to be terminated and for use with either stranded conductors.

b. Terminal lugs shall be Listed and of the split bolt or bolted split sleeve type in which the bolt or setscrew does not bear directly on the conductor. Tongues shall have NEMA standard drilling.

c. Crimp with manufacturer-recommended ratchet type tool with calibrated dyes. Hand crimping tools are not acceptable.

C. Tape used for splices and terminations shall be compatible with the insulation and jacket of the cable and shall be of plastic material. Tape shall conform to UL 510.

D. Wire markers shall be heat shrink type (Raychem; T&B; or equal). Wire numbers shall be permanently imprinted on the markers.

PART 3 – EXECUTION

3.01 CONDUCTOR INSTALLATION

A. Provide the following types and sizes of conductors for the uses indicated for 600 V or less:

1. Stranded Copper, Sizes No. 12 and No. 10 AWG: As shown on the Drawings for circuits for receptacles, switches, and light fixtures with screw type terminals.

2. Stranded Copper, Size No. 14 AWG and Larger: As shown on the Drawings for the control of motors or other equipment. Size No. 14 shall not be used for power supplies to any equipment.

INFORMATIONAL COPY ONLY - NOT FOR BIDDING

3. Stranded Copper, Sizes No. 12 AWG and Larger: As shown on the Drawings for motors and other power circuits.

4. Fixture Wire: For connections to all fixtures in which the temperature may exceed the rating of branch circuit conductors.

B. Color Coding: Provide color coding for all circuit conductors. Insulation color shall be white for neutrals and green for grounding conductors. An isolated ground conductor shall be identified with an orange tracer in the green body. Ungrounded conductor colors shall be as follows:

1. 208Y/120 V, Three-Phase, Power: (A) Black, (B) Red, and (C) Blue.

2. 480Y/277 V, Three-Phase, Power: (A) Brown, (B) Orange, and (C) Yellow.

3. 240/120 V, Three-Phase, Power: (A) Black, (B) Orange, and (C) Blue.

   a. Mark high leg of 4-wire grounded delta system per Article 110.15 of the NEC.

4. 120/240 V, Single-Phase, Power: (A) Black and (B) Red.

5. 120 Vac, Control: Red.

6. 24 Vdc Control.

   a. dc Common: White with blue strip.

   b. dc Control (+): Blue.

   c. dc Signal (Discrete): Purple.

7. Analog:

   a. Analog signal (+): White or Red.

   b. Analog signal (-): Black.

C. Color-coding shall be in the conductor insulation for all conductors No. 10 AWG and smaller. For larger conductors, color shall be either in the insulation or in colored plastic tape applied at every location where the conductor is readily accessible (e.g., enclosures, pull boxes, and junction boxes).

D. Exercise care in pulling wires and cables into conduit or wireways so as to avoid kinking, putting undue stress on the cables, or otherwise abrading the cables. No grease will be permitted in pulling cables. Only soapstone, talc, or Listed pulling compound will be permitted. The raceway construction shall be complete and protected from the weather before cable is pulled into it. Swab conduits before installing cables and exercise care in pulling to avoid damage to conductors.

E. Wrap all cables in manholes with fireproofing tape. Extend tape 1 inch into ducts.

INFORMATIONAL COPY ONLY - NOT FOR BIDDING

F. Cable bending radius shall be per applicable code. Install feeder cables in one continuous length unless splices are favorably reviewed.

G. Provide an equipment-grounding conductor, whether or not it is shown on the Drawings, in all flexible conduit and all raceways.

H. In panels, bundle incoming wire and cables, No. 6 AWG and smaller; lace at intervals not greater than 6 inches; neatly spread into trees; and connect to respective terminals. Allow sufficient slack in cables for alterations in terminal connections. Perform lacing with plastic cable ties or linen lacing twine. Where plastic panel wiring duct is provided for cable runs, lacing is not necessary when the cable is properly installed in the duct.

I. In wireways, ty-wrap/secure wire and cables at a minimum of every 4 feet.

J. For cables crossing hinges, utilize extra flexible stranded wire, make up into groups not exceeding 12, and arrange to provide protection from chafing and excess flexing when the hinged member is moved.

3.02 CONDUCTOR SPLICES AND TERMINATIONS

A. Splices: Install all conductors without splices unless necessary for installation, as determined by the Engineer. Splices, when permitted, and terminations shall be in accordance with the splice or termination kit manufacturer's instructions. Splice or terminate wire and cable as follows:

1. Watertight Splices: Splices in concrete pull boxes, for any type of cable or wire, shall be watertight. Make splices in low-voltage cables using epoxy resin splicing kits rated for application up to 600 V.

B. Terminations: Terminate stranded No. 14 wire using crimp-type terminals where not terminated in a box lug-type terminal. Terminals must be coordinated with type of terminal board where provided.

3.03 FIELD TESTS

A. Insulation Resistance Tests:

1. Perform an insulation resistance test for all circuits 150 V to ground or more and for all motor circuits over 1/2 horsepower.

2. Test cables per NETA ATS-2009, Section 7.3.2. Submit results for review.

B. Phase Rotation: The phase rotation of all circuits shall be clockwise in sequence as determined with a phase rotation meter and shall produce the standard direction of rotation specified for polyphase induction motors in NEMA MG1. The Contractor shall verify that each three-phase service, feeder, and branch circuits meet this requirement. A record shall be kept at each circuit tested and, on completion, submitted to the Engineer for review.

END OF SECTION

INFORMATIONAL COPY ONLY - NOT FOR BIDDING

SECTION 26 05 26

GROUNDING AND BONDING FOR ELECTRICAL SYSTEMS

PART 1 – GENERAL

1.01 SUMMARY

A. This section specifies the system for grounding electrical equipment.

1.02 RELATED SECTIONS

A. The work of the following sections is related to the work of this section. Other sections, not referenced below, may also be related to the proper performance of this work. It is the Contractor's responsibility to perform all the work required by the Contract Documents.

1. Section 26 05 11, "General Requirements for Electrical Installation."

1.03 REFERENCE STANDARDS

A. ASTM B228: Copper Clad Steel Conductors Specification.

B. ASTM D178: Specifications for Rubber Insulating Matting.

C. NEPA 70: National Electric Code (NEC).

D. NETA ATS: Acceptance Testing Specifications for Electrical Equipment for Power Systems.

1.04 SUBMITTALS

A. As specified in Section 26 05 11, "General Requirements for Electrical Installation."

B. Catalog Cut Sheets.

C. Shop Drawings.

D. Test data.

1.05 QUALITY ASSURANCE

A. Source Quality Control: Products shall be listed and labeled by an approved Nationally Recognized Testing Lab (NRTL) such as Underwriter's Laboratories, Inc. (UL), ETL, or Canadian Standards Association.

INFORMATIONAL COPY ONLY - NOT FOR BIDDING

PART 2 – PRODUCTS

2.01 GENERAL

A. The grounding systems shall consist of the ground rods, grounding conductors, ground bus, ground fittings and clamps, and bonding conductors to water piping and structural steel as shown on the Drawings or as required to meet the requirements of the NEC. One system shown provides service and separately derived system grounds. A second system is an electronic ground system to provide for the discharge of static electricity.

2.02 SYSTEM COMPONENTS

A. Ground Rods:

1. Ground rods shall be cone-pointed, copper-clad Grade 40 HS steel rods conforming to ASTM B228.

2. The welded copper encased steel rod shall have a conductivity of not less than 27 percent of pure copper.

3. Rods shall be not less than 3/4 inch in diameter and 10 feet long, unless otherwise indicated.

4. Rods longer than 10 feet shall be made up of 10-foot units joined together with threaded couplings. Increase rod diameter sufficiently to prevent the rod from bending or being damaged.

5. The manufacturer's trademark shall be stamped near the top.

B. Ground Conductors:

1. Buried conductors shall be medium-hard drawn bare copper; other conductors shall be soft drawn copper.

2. Sizes over No. 6 AWG shall be stranded.

3. Coat all ground connections, except the exothermic welds, with electrical joint compound, nonpetroleum type, listed for copper and aluminum applications.

4. If cable sizes are not specified, the minimum sizes shall be as follows:

a. 15 kV – 480 V Transformer:	250 MCM
b. 15 kV Load Interrupter:	4/0 AWG
c. 480 V Switchgear:	4/0 AWG
d. 480 V MCC and Switchboards:	2/0 AWG
e. Lighting Panels:	1/0 AWG
f. Exposed Metal:	2 AWG

INFORMATIONAL COPY ONLY - NOT FOR BIDDING

C. Ground Connections:

1. Exothermic Connectors:

   a. Connection to ground rods and buried connections shall be by exothermic weld.

   b. Acceptable Manufacturer:

      1) Thermoweld.

      2) Cadweld.

      3) Approved equal.

2. Binding Post Connectors:

   a. Lugs for attachment of cables to steel enclosures shall be of the binding post type with a 1/2-13 NC stud.

   b. Each post shall accommodate cables from No. 4 AWG to No. 4/0 AWG.

3. Compression Connectors:

   a. Cast copper.

   b. Acceptable Manufacturer:

      1) Thomas and Betts.

      2) Burndy.

      3) Approved equal.

4. Bolted Connectors:

   a. Acceptable Manufacturer:

      1) Burndy.

      2) O. Z. Gedney.

      3) Approved equal.

D. Ground Rod Boxes:

1. Boxes shall be 9-inch-diameter precast concrete units with hot-dip galvanized traffic covers.

2. Units shall be 12 inches deep.

3. Covers shall be embossed with the wording “Ground Rod.”

INFORMATIONAL COPY ONLY - NOT FOR BIDDING

E. Ground Bus:

1. Ground bus shall be a high-conductivity copper-alloy strap measuring 3/16 inch by 1-1/4 inch and of lengths as shown on the Drawings.

2. Bus shall be predrilled and tapped to accept 8/32 brass machine screws on 12-inch centers.

PART 3 – EXECUTION

3.01 INSTALLATION

A. Ground all equipment for which a ground connection is required per NEC whether or not the ground connection is specifically shown on the Drawings.

B. Provide a ground rod box for each ground rod so as to permit ready access for the connection and/or removal of any pressure connectors to facilitate testing.

C. Bond metallic water piping at its entrance into each building. Ground separately derived electrical system neutrals to the metallic water piping in addition to the system driven ground per NEC requirements.

D. Make embedded or buried ground connections, taps, and splices with exothermic welds. Coat ground connections.

E. Effectively bond structural steel for buildings to the grounding system using exothermic welds.

F. Prior to making ground connections or bonds, clean metal surface at the point of connection.

G. Install rubber mats in front of low-voltage switchboards and switchgear, medium-voltage switchgear, and motor control centers.

3.02 RACEWAY GROUND

A. Metallic Conduits:

1. Assembled to provide a continuous ground path and bonded using insulated grounding bushings.

2. Bond using insulated grounding bushings.

B. Non-Metallic Conduits: Insulated ground conductor sized in compliance with the NEC.

C. Grounding Bushings: Connected to the grounding system using conductors sized in compliance with NFPA 70.

D. Provide a ground wire in every conduit carrying a circuit of over 50 V to ground.

INFORMATIONAL COPY ONLY - NOT FOR BIDDING

3.03 EQUIPMENT AND ENCLOSURE GROUND

A. Connect electrical and distribution equipment to the grounding system. Cables sized as specified.

B. Connect non-electrical equipment with metallic enclosures to the grounding system.

C. Securely bond transformer yard fences and gates as specified.

3.04 TESTING

A. Conduct ground-resistance tests using a ground megohmmeter with a scale reading of 25 ohms maximum.

B. Test methods shall conform to NETA Standard ATS using the three-electrode method. Conduct tests only after a period of not less than 48 hours of dry weather.

C. Maximum resistance shall be 5 ohms. If 5 ohms cannot be achieved, add additional ground rods and ground grid conductors until the maximum resistance is achieved. If soil conditions provide that this value is impossible to achieve, add ground rods and conductors to achieve the lowest resistance realistic and submit to the Engineer for favorable approval. If Engineer does not approve the value and configuration, follow Engineer's direction for further reduction of ground resistance.

D. Furnish to the Engineer a test report with recorded data of each ground rod location.

E. Furnish a separate report on the rubber mats. Make measurements in conformance with manufacturer's instructions.

END OF SECTION

INFORMATIONAL COPY ONLY - NOT FOR BIDDING

This Page Intentionally Left Blank

INFORMATIONAL COPY ONLY - NOT FOR BIDDING

SECTION 26 05 29

HANGERS AND SUPPORTS FOR ELECTRICAL SYSTEMS

PART 1 – GENERAL

1.01 SECTION INCLUDES

A. This section specifies the furnishing of installation of hangers and supports for electrical systems as indicated on the Contract Drawings and herein specified.

1.02 RELATED SECTIONS

A. The work of the following sections is related to the work of this section. Other sections, not referenced below, may also be related to the proper performance of this work. It is the Contractor's responsibility to perform all the work required by the Contract Documents.

1. Section 26 05 11, "General Requirements for Electrical Installation."

2. Section 26 05 33, "Raceways and Boxes for Electrical Systems."

1.03 REFERENCE STANDARDS

A. This section incorporates by reference the latest revision of the following documents. These references are a part of this section as specified and modified. In case of conflict between the requirements of this section and those of the listed documents, the requirements of this section shall prevail.

1. ASTM A123: Standard Specification for Zinc Coatings on Iron and Steel.

2. ASTM A193/A193M REV C: Alloy-Steel and Stainless Steel Bolting Materials for High Temperature Service.

3. NFPA 70: National Electrical Code (NEC).

1.04 SYSTEM DESCRIPTION

A. Design Requirements:

1. Delegated Design: The following systems shall be designed and sealed by a Washington State Registered Professional Structural Engineer to ensure conformance with IBC seismic, building, and load requirements:

   a. Cable tray support systems.

   b. Suspended raceway supports.

2. Raceway and cable tray supporting systems, structures, and elements shall be designed to meet seismic and other building structural requirements and to support the static and dynamic load of the wiring and raceways that they will carry.

INFORMATIONAL COPY ONLY - NOT FOR BIDDING

1.05 SUBMITTALS

A. As specified in Section 26 05 11, “General Requirements for Electrical Installations.”

B. Include manufacturer’s catalog cuts.

C. Submit sealed structural drawings when raceway and cable tray support systems require design by a registered engineer.

D. Submit attachment details for any new support connections to the existing pump station dry well or access tube and demonstrate approval from pump station manufacturer (Smith & Loveless or Usemco, as applicable) prior to installation.

PART 2 – PRODUCTS

2.01 RACEWAY SUPPORTS

A. Conduit Supports:

1. Provide hot-dip galvanized framing channel with end caps to support groups of conduit. All associated hardware shall be hot-dip galvanized.

2. Individual conduit supports shall be one-hole hot-dip galvanized malleable iron pipe straps used with galvanized clamp backs and nesting backs where required.

3. Conduit supports for PVC-coated rigid steel and PVC conduit systems shall be one-hole PVC-coated rigid steel or clamps conduit wall hangers.

4. In corrosive areas (e.g., wet well), all conduit support hardware (e.g., channels, strut, threaded rods, nuts, anchors, and clamps) for single and multiple conduits shall be stainless steel.

B. Ceiling Hangers:

1. Ceiling hangers shall be adjustable galvanized carbon steel rod hangers as specified. Straps or hangers of plumber’s perforated tape are not acceptable.

2. Unless otherwise indicated, hanger rods shall be 1/2-inch all-thread rod and shall meet ASTM A193.

3. Hanger rods in corrosive areas and those exposed to weather or moisture shall be stainless steel.

INFORMATIONAL COPY ONLY - NOT FOR BIDDING

C. Suspended Raceway Supports (Racks):

1. Suspended raceway supports shall consist of concrete inserts, galvanized carbon steel rod hangers, and jamb nuts supporting hot-dip galvanized framing channel or lay-in pipe hangers as required.

2. Unless otherwise indicated, hanger rods shall be 1/2-inch all-thread rod and shall meet ASTM A193.

3. Brace all suspended raceway supports at 30-foot intervals (alternating from one side to the other) to meet specified seismic requirements.

D. Framing Channel:

1. Shall be hot dipped galvanized unless otherwise specified.

2.02 GENERAL FASTENING AND SUPPORT HARDWARE

A. Unless otherwise specified, all fasteners, anchors, clamps, supports, strut, plates, posts, and brackets shall be 316 stainless steel. When fastening to existing walls, floors, and the like, provide capsule anchors, not expansion shields. Size capsule anchors to meet load requirements. Minimum size capsule anchor bolt is 3/8 inch.

PART 3 – EXECUTION

3.01 GENERAL

A. Treat exposed mail threads, cut surfaces, and damaged ends with corrosion-resistant coatings, such as “Devcon Z” prepared by Subox Coatings, “Galvanox Type I” prepared by Pedley-Knowles, or equal. Application shall follow manufacturer’s recommendation.

END OF SECTION

INFORMATIONAL COPY ONLY - NOT FOR BIDDING

This Page Intentionally Left Blank

INFORMATIONAL COPY ONLY - NOT FOR BIDDING

SECTION 26 05 33

RACEWAYS AND BOXES FOR ELECTRICAL SYSTEMS

PART 1 – GENERAL

1.01 SECTION INCLUDES

A. This section specifies the furnishing, installation, and connection of electrical conduits, wireways, pull boxes, and fittings as indicated on the Contract Drawings and herein specified. Raceways shall be provided for all wiring unless shown or specified otherwise.

1.02 RELATED SECTIONS

A. The work of the following sections is related to the work of this section. Other sections, not referenced below, may also be related to the proper performance of this work. It is the Contractor's responsibility to perform all the work required by the Contract Documents.

1. Section 26 05 11, "General Requirements for Electrical Installation."

2. Section 26 05 29, "Hangers and Supports for Electrical Systems."

3. Section 26 05 53, "Identification for Electrical Systems."

1.03 REFERENCED STANDARDS

A. This section incorporates by reference the latest revision of the following documents. These references are a part of this section as specified and modified. In case of conflict between the requirements of this section and those of the listed documents, the requirements of this section shall prevail.

1. ANSI C80.1 – Rigid Steel Conduit-Zinc Coated.

2. ANSI C80.3 – Electrical Metallic Tubing-Zinc Coated.

3. ASTM A48 REV A – Gray Iron Castings.

4. ASTM A193/A193M REV C – Alloy-Steel and Stainless Steel Bolting Materials for High Temperature Service.

5. ASTM F512 – Smooth-Wall Polyvinylchloride Conduit and Fittings for Underground Installation.

6. FEDSPEC WW-C-581E – Conduit, Metal, Rigid and Intermediate; and Coupling, Elbow, and Nipple, Electrical Conduit; Zinc Coated.

7. FEDSPEC W-C-1094A – Conduit and Conduit Fitting Plastic, Rigid.

8. NEMA ICS 6 – Industrial Control and Systems Enclosures.

INFORMATIONAL COPY ONLY - NOT FOR BIDDING

9. NEMA RN1 – Polyvinyl Chloride (PVC) externally Coated Galvanized Rigid Steel Conduit and Intermediate Metal Conduit.

10. NEMA TC2 – Electrical Plastic Tubing (EPT) and Conduit (EPC 40 and EPC 80).

11. NEMA TC6 – PVC and ABS Plastic Utilities Duct for Underground Installation.

12. NEMA VE-1 – Metal Cable Tray Systems.

13. NEMA 250 – Enclosures for Electrical Equipment (1,000 volts maximum).

14. NFPA 70 – National Electrical Code (NEC).

15. NFPA 79 – Electrical Standards for Industrial Machinery.

16. UL 1 – Flexible Metal Electrical Conduit.

17. UL 6 – Rigid Metal Electrical Conduit.

18. UL 360 – Liquid Tight Flexible Electrical Conduit.

19. UL 651 – Rigid Nonmetal Electrical Conduit.

1.04 SUBMITTALS

A. As specified in Section 26 05 11, “General Requirements for Electrical Installations.”

B. Include manufacturer’s catalog cuts.

PART 2 – PRODUCTS

2.01 RACEWAY

A. Requirements for raceway types are listed in the RACESPECs sheets at the end of this section.

2.02 BOXES AND FITTINGS

A. Junction Boxes, Pull Boxes and Wiring Gutters:

1. Indoor:

   a. Type FD cast ferrous for all device boxes and for junction boxes less than 6 inches square. NEMA 12 welded steel 6 inches square and larger. Door shall have hinges with clamp locks. Boxes in process areas shall be NEMA 4 watertight.

   b. Conduit Bodies: Ferrous alloy type with screw taps for fastening covers. Gaskets shall be made of neoprene.

INFORMATIONAL COPY ONLY - NOT FOR BIDDING

2. Outdoor:

   a. Type FD cast ferrous for all devices and for junction boxes less than 6 inches square. NEMA 4X stainless steel for 6 inches square and larger.

3. Outdoor boxes and enclosures shall be provided with neoprene gaskets on the hinged doors or removable covers.

4. Boxes and enclosures in indoor corrosive areas shall be NEMA 4X stainless steel or nonmetallic.

5. Boxes in classified areas shall be NEMA Class 7 galvanized cast ferrous.

6. Box and gutter sizes, metal thickness, and grounding shall comply with the National Electrical Code.

7. Bolt-on junction box covers 3 feet square or larger, or heavier than 25 pounds, shall have a rigid handle.

8. Covers larger than 3 by 4 feet shall be split.

B. Conduit Seals:

1. Conduit seals shall be explosion-proof with a minimum 40 percent wire fill capacity of the EYSX type. Where shown on Drawings, use retrofit conduit sealing fittings of the EYSR type.

2. Install conduit seals for use in classified areas as shown on Drawings or where any conduit leaves the classified space.

3. Use PVC-coated fittings with urethane interior coating for PVC-coated GRS; use copper free cast aluminum for rigid aluminum.

4. The sealing compound shall be as prescribed by the manufacturer of the sealing conduit body.

5. Use the sealant, such as Chico, in areas that are defined as hazardous and meet the NEC requirements for Article 500.

C. Cord Grips: Stainless steel, liquid-tight cod grip with stainless steel, mesh strain-relief. Kellums deluxe or approved equal. Provide size per manufacturer's recommendation for specific cable diameter.

2.03 UNDERGROUND MARKING TAPE

A. 6-inch-wide, detectable, metallic-lined tape with red polyethylene film on top and clear polyethylene film on the bottom.

B. Tape legend shall be clearly printed with black over red tape and shall read "CAUTION ELECTRIC LINE BURIED BELOW."

INFORMATIONAL COPY ONLY - NOT FOR BIDDING

C. Use for early warning protection of underground raceways.

D. Acceptable Manufacturer:

1. Brady “Identoline.”

2. Services and Materials “Buried Underground Tape.”

3. Somerset (Thomas & Betts) “Protect-A-Line.”

4. Approved equal.

2.04 FIRESTOPS

A. Apply in accordance with manufacturer’s recommendations.

B. Acceptable Manufacturers:

1. Flamemastic 77.

2. Vimasco No. 1-A.

3. Approved equal.

C. Products which are affected by water are not acceptable.

PART 3 – EXECUTION

3.01 GENERAL

A. Specific raceway types and applications are indicated on the Drawings and/or in the raceway schedule. When not indicated on the drawings and/or in the raceway schedule Table A specifies the type of raceway required for each location and application by RACESPEC sheet. Use fittings, hubs, and boxes as specified by the raceway type in RACESPEC. Unless otherwise indicated, in Table A, unscheduled conduit shall be galvanized, rigid steel, RACESPEC type GRS.

Table A

Location	Application/Condition	RACESPEC
Indoor noncorrosive	Exposed	GRS
Indoor corrosive	Exposed; includes Wet Well location	PRS
Outdoor	Exposed	PRS
Concealed	Embedded in concrete structure or beneath slab-on-grade	PRS
Underground	Instrumentation, communications and data signals encased in concrete, duct bank	PRS

INFORMATIONAL COPY ONLY - NOT FOR BIDDING

Table A		
Location	**Application/Condition**	**RACESPEC**
Underground	Instrumentation, communications and data signals directly buried	PRS
Underground	Power and control directly buried	PVC40
Underground	Power duct bank	PVC80
Nonhazardous	Final connection to equipment and light fixtures	LFS
Underground	Telephone service direct buried	PVC80
Architecturally finished areas	Final connection to light fixtures	FLEX
Transition	At grade transition	PRS

3.02 CONDUIT

A. General:

1. The number of directional changes of a conduit shall be limited to 270 degrees in any run between pull boxes.

2. Conduit runs shall be limited to a maximum of 400 feet, less 100 feet or fraction thereof, for every 90 degrees of change in direction.

3. Provide conduit and raceway systems that are electrically continuous per electrical code requirements or provide additional ground conductors as required by the electrical code.

B. Indoor and Outdoor Conduit Systems:

1. Unless otherwise indicated, in general, conduit inside structures shall be exposed.

2. Unless otherwise indicated, the Contractor shall be responsible for determining conduit routing that conforms to the installation requirements set forth herein.

3. Install conduit to conform to the requirements of the RACESPEC sheets and the following:

   a. Install exposed conduit either parallel or perpendicular to structural members and surfaces.

   b. Two or more exposed conduits in the same general routing shall be in parallel with symmetrical bends.

   c. Exposed conduit shall be run on supports spaced not more than 10 feet apart.

INFORMATIONAL COPY ONLY - NOT FOR BIDDING

d. Where three or more conduits are located in parallel run, space them out from the wall using framing channel.

e. Where conduits are suspended from the ceiling, support systems shall comply with the requirements of Section 26 05 29, “Hangers and Supports for Electrical Systems.”

f. Secure conduit rack supports to concrete walls and ceilings by means of cast-in-place anchors or framing channel concrete inserts.

g. Conduits shall be at least 6 inches from high temperature piping, ducts, and flues with temperatures higher than 90 degrees C.

h. Install conduits between the reinforcing steel in walls or slabs which have reinforcing in both faces. In slabs which have only a single layer of reinforcing steel, place conduits under the reinforcement.

i. Route conduit clear of structural openings and indicate future openings.

j. Flash and seal watertight those conduits which pass through roofs or metal walls.

k. Neatly group conduit into any openings cut into concrete and masonry structures, and grout using non-shrink type grout.

l. During construction, cap conduits to prevent entrance of dirt, trash, and water.

m. Terminate exposed conduit stubs for future use with galvanized pipe caps.

n. Determine concealed conduit stub-up locations from the manufacturer’s shop drawings.

o. Terminate concealed conduit for future use in equipment or by galvanized couplings plugged flush with structural surfaces.

p. Where the drawings indicate future duplication of equipment wired hereunder, provide concealed portions of conduits for future equipment.

q. Conduit installed horizontally shall allow headroom of at least 7 feet except where it may be installed along structures, piping, and equipment, or in other areas where headroom cannot be maintained because of other considerations.

r. Terminate all conduits that enter enclosures by fittings that ensure that the NEMA rating of the enclosure is not affected or changed.

s. Transitions from concealed or underground or embedded locations to exposed or above-grade locations shall be made using PVC-coated rigid steel conduit for a distance of at least 12 inches on either side of transition. Connect underground metallic or nonmetallic conduit that turns out of concrete, masonry, or earth to a 90-degree elbow of PVC-coated rigid steel conduit before emergence.

INFORMATIONAL COPY ONLY - NOT FOR BIDDING

t. Conduit across structural joints where structural movement is allowed shall have an OZ-Gedney “Type DX” or Crouse-Hinds “Type XD,” bonded, weathertight expansion and deflection fitting of that conduit size.

u. Treat cut surfaces or damaged ends with corrosion-resistant coatings, such as “Devcon Z” prepared by Subox Coatings, “Galvanox Type I” prepared by Pedley-Knowles, or equal. Application shall follow manufacturer’s recommendation.

v. At all boxes and equipment, provide insulated-type, metallic, hot-dipped galvanized grounding bushings for metallic conduits. Bond together all conduits to provide continuity of the equipment grounding system. Size bonding conductor per NEC.

C. Underground Conduit System:

1. All excavation, backfilling, and concrete work shall conform to respective sections of these Specifications. Underground conduit shall conform to the following requirements:

a. Exposed outdoor conduit risers shall continue to 3 inches above grade, with top crowned and edges chamfered.

b. Unless otherwise indicated, underground conduits and conduit banks shall have 2 feet minimum earth cover.

c. Using a special rubber gasketed sleeve and joint assemblies, or with sleeves and modular rubber sealing elements, seal watertight those conduits not encased in concrete and passing through walls that have one side in contact with earth.

d. Immediately upon completion of pouring concrete, thoroughly swab conduits on the inside. After the concrete has set, and before backfilling, pull a mandrel, having a diameter equal to the nominal conduit inside diameter minus 1/2 inch, and not less than 4 inches long, through each conduit. If the mandrel showed signs of protrusions on the inside of the conduit, repair or replace the conduit.

e. Provide all spare raceways with a nylon pull rope.

2. Provide detectable underground marking tape placed 6 to 12 inches below finished grade and directly above the conduit.

3. Transition from Underground to Above Grade: Provide PRS conduit sweep and PRS conduit riser to a distance of at least 12 inches above grade.

4. Underground sweeps shall be PRS.

5. Unless otherwise indicated, use 6-inch coarse sand backfill on all sides of underground conduit.

INFORMATIONAL COPY ONLY - NOT FOR BIDDING

3.03 RACEWAY SPECIFICATION (RACESPEC) SHEETS

A. The following RACESPECs are included in this section:

RACESPEC Symbol	Raceway Description
FLEX	Flexible steel conduit
GRS	Rigid steel conduit
LFS	Liquidtight flexible steel conduit
PRS	PVC coated rigid steel conduit
PVC40	Schedule 40 PVC conduit
PVC80	Schedule 80 PVC conduit
WW	Wireway and auxiliary gutter

INFORMATIONAL COPY ONLY - NOT FOR BIDDING

Raceway Identification:	FLEX
Description:	Flexible steel conduit.
Application:	Final connection to lighting fixtures in architecturally finished areas only.
Compliance:	UL 1.
Construction:	Spirally-wound galvanized steel strip with successive convolutions securely interlocked.
Minimum Size:	1/2 inch.
Fittings:	Compression type.
Other:	FLEX shall be provided with an internal ground wire.
Installation:	Flexible steel conduit shall be made up tight and with conductive “coppershield” thread compound.

INFORMATIONAL COPY ONLY - NOT FOR BIDDING

Raceway Identification:	GRS
Description:	Rigid steel conduit.
Compliance:	ANSI C80.1, UL 6.
Finish:	Hot-dip galvanized after fabrication, inside and outside. Smooth finished surfaces.
Manufacturers:	Allied Tube and Conduit Corp., Wheatland Tube Co., or equal.
Minimum Size:	Unless otherwise specified, 3/4 inch for exposed, 1 inch for embedded, encased, or otherwise inaccessible.
Fittings:	Hubs: Insulated throat with bonding locknut, hot-dip galvanized. The hubs shall utilize a neoprene O-ring and shall provide a watertight connection. O-Z Gedney, CHM-XXT, or equal.
Unions:	Electrogalvanized ferrous alloy type Appleton UNF or UNY, Crouse-Hinds UNF or UNY, or equal. Threadless fittings are not acceptable.
Indoor:	Type FD cast ferrous for all device boxes and for junction boxes less than 6 inches square. NEMA 12 welded steel 6 inches square and larger. Door shall have hinges with clamp locks. Boxes in process areas shall be NEMA 4 watertight. Conduit Bodies: Ferrous alloy type with screw taps for fastening covers. Gaskets shall be made of neoprene.
Outdoor:	Type FD cast ferrous for all devices and for junction boxes less than 6 inches square. NEMA 4X stainless steel for 6 inches square and larger.
Corrosive:	NEMA 4X stainless steel.
Hazardous:	NEMA Class 7 cast ferrous.
Elbows:	3/4 inch through 1-1/2 inches: Factory fabricated or field bent. 2 inches through 6 inches: Factory fabricated only.
Conduit Bodies:	3/4 inch through 4 inches: Malleable iron, hot-dip galvanized, unless otherwise noted. Neoprene gaskets for all access plates. Tapered threads for all conduit entrances.
5-inch and 6-inch:	Electrogalvanized iron or cast iron box.

INFORMATIONAL COPY ONLY - NOT FOR BIDDING

Expansion Fittings: Expansion fittings in embedded runs shall be watertight and shall be provided with an internal bonding jumper. The expansion material shall be neoprene and shall allow for 3/4-inch movement in any direction.

Manufacturers: Appleton, Crouse-Hinds, Hubbel, O.Z. Gedney, or equal.

Installation: Rigid steel conduit shall be made up tight and with conductive "coppershield" thread compound. Joints shall be made with standard couplings or threaded unions. Steel conduit shall be supported away from the structures using hot-dip galvanized malleable iron straps with nesting backs.

Conduit entering boxes shall be terminated with a threaded hub with a grounding bushing.

Exposed male threads or rigid steel conduit shall be coated with zinc-rich paint.

INFORMATIONAL COPY ONLY - NOT FOR BIDDING

Raceway Identification:	LFS
Description:	Liquidtight flexible steel conduit.
Application:	Final connection to equipment subject to vibration or adjustment.
Compliance:	UL 360.
Construction:	Spirally-wound galvanized steel strip with successive convolutions securely interlocked and jacketed with liquidtight plastic cover.
Minimum Size:	3/4 inch.
Fittings:	Cadmium-plated malleable iron body and gland nut with cast-in lug, brass grounding ferrule threaded to engage conduit spiral and O-ring seals around the conduit and box connection and insulated throat. Forty-five and 90-degree fittings shall be used where applicable.
Installation:	The length of flexible liquidtight conduit shall not exceed 15 times the trade diameter of the conduit. The length of liquidtight conduit shall not exceed 36 inches. Liquidtight flexible steel conduit shall be made up tight and with conductive “coppershield” thread compound.

INFORMATIONAL COPY ONLY - NOT FOR BIDDING

Raceway Identification:	PRS
Description:	Rigid steel conduit, corrosion-resistant, polyvinyl chloride (PVC) coated.
Compliance:	ANSI C80.1, UL 6, NEMA RN1.
Finish:	PRS shall be hot dipped galvanized rigid steel conduit. The inside and outside, as well as the threads shall be galvanized. A minimum 40-mil thick PVC coating shall be bonded to the outside of the conduit and the inside shall be coated with 2-mil urethane. Coating shall be free of pinholes. Bending of conduit shall not damage either the interior or exterior coating. Bond strength shall exceed the tensile strength of the PVC coat. Elbows shall be factory made and coated.
Minimum Size:	3/4 inch.
Fittings:	Similarly coated to the same thickness as the conduit and provided with Type 316 stainless steel hardware. A 2-mil urethane coating shall be applied to the interior, and the threads of all fittings and couplings. Conduit and fittings shall be manufactured by the same company.
Hubs:	Hubs for connection of conduit to junction, device, pull, or terminal boxes shall be threaded and made of cast ferrous alloy. Hubs shall be galvanized steel and have insulating bushings. The hubs shall utilize a neoprene O-ring and shall provide a watertight connection.
Boxes:	Nonhazardous: NEMA 250, Type 4X stainless steel. Hazardous: NEMA 250, Type 7D cast ferrous.
Installation:	PVC-coated conduit shall be supported away from the structure using PVC-coated conduit wall hangers. All conduit threads shall be covered by a plastic overlap which shall be coated and sealed per manufacturer's recommendations. Plastic coated conduit shall be made tight with special wrenches and fittings designed for tightening PVC-coated conduit. All threads shall be protected against corrosion per NEC 300.6 (a) by liberally applying an approved electrically conductive, corrosion-resistant compound – "coppershield". Pipe wrenches and channel locks shall not be used for tightening plastic coated conduits. Damaged areas shall be patched, using manufacturer's recommended material. The area to be patched shall be built up to the full thickness of the coating. Painted fittings are not acceptable.

INFORMATIONAL COPY ONLY - NOT FOR BIDDING

Raceway Identification:	PVC40
Description:	Rigid nonmetallic polyvinylchloride conduit for normal duty applications including direct burial.
Compliance:	NEMA TC2, UL 651.
Construction:	Schedule 40, polyvinylchloride (PVC).
Minimum Size:	3/4 inch exposed; 1 inch embedded or encased.
Fittings:	PVC solvent weld type.
Boxes:	Indoor: NEMA Class 4, nonmetallic. Outdoor and Corrosive: NEMA Class 4X, nonmetallic.
Installation:	Exposed PVC conduit shall be run on supports spaced not more than 3 feet apart for conduits up to 1 inch 5 feet apart for conduits 1-1/4 inches to 2 inches and 6 feet apart for conduits 2-1/2 inches and larger. PVC conduit shall not be provided where it will be damaged by heat. PVC conduit shall have bell ends where terminated at walls.

INFORMATIONAL COPY ONLY - NOT FOR BIDDING

Raceway Identification:	PVC80
Description:	Rigid nonmetallic conduit, extra heavy wall thickness for all locations including direct bury under roadways and where exposed to physical damage.
Compliance:	NEMA TC2, UL 651.
Construction:	Schedule 80, high-impact, polyvinylchloride (PVC).
Minimum Size:	3/4 inch exposed; 1 inch embedded or encased.
Fittings:	PVC solvent weld type.
Boxes:	Indoor: NEMA Class 4, nonmetallic. Outdoor and Corrosive: NEMA Class 4X, nonmetallic.
Installation:	Exposed PVC conduit shall be run on supports spaced not more than 3 feet apart for conduits up to 1 inch 5 feet apart for conduits 1-1/4 inches to 2 inches and 6 feet apart for conduits 2-1/2 inches and larger. PVC conduit shall not be provided where it will be damaged by heat. PVC conduit shall have bell ends where terminated at walls.

INFORMATIONAL COPY ONLY - NOT FOR BIDDING

Raceway Identification:	WW
Description:	Wireway and auxiliary gutter, flanged, oiltight type with hinged covers.
Compliance:	JIC EMP-1.
Minimum Size:	8-inch by 8-inch.
Finish:	Hot-dip galvanized after fabrication, inside and outside. Smooth finished surfaces. Paint with factory standard finish.
Application:	As indicated on the Drawings.

END OF SECTION

INFORMATIONAL COPY ONLY - NOT FOR BIDDING

SECTION 26 05 43

UNDERGROUND DUCTS AND RACEWAYS FOR ELECTRICAL SYSTEMS

PART 1 – GENERAL

1.01 SUMMARY

A. This section specifies handholes and manholes for underground electrical systems.

B. Provide all electrical materials and labor to satisfactorily complete all electrical work shown on the Drawings, specified, or neither shown nor specified but necessary, for a complete and fully operating facility.

1.02 RELATED SECTIONS

A. The work of the following sections is related to the work of this section. Other sections, not referenced below, may also be related to the proper performance of this work. It is the Contractor's responsibility to perform all the work required by the Contract Documents.

1. Section 26 05 11, "General Requirements for Electrical Installation."

2. Section 26 05 26, "Grounding and Bonding for Electrical Systems."

3. Section 26 05 33, "Raceways and Boxes for Electrical Systems."

1.03 REFERENCE STANDARDS

A. Applicable Standards of the National Electrical Code (NEC).

1.04 SUBMITTALS

A. Manufacturers' trade names and catalog numbers stated herein are intended to indicate the type and quality of equipment desired. Provide sufficient data to allow determination of compliance with these Contract Documents. List any proposed deviations from these Contract Documents.

1. Submit a single, complete submittal package for all products in this section.

1.05 QUALITY ASSURANCE

A. Electrical equipment, materials, and installation methods shall conform to all applicable local and state codes as well as the editions of the following in effect on the date of issuance of the Contract Documents.

1. National Electrical Code (NEC).

B. UL listing is required for all equipment and materials where such listing is offered by the Underwriters Laboratories. Safety labeling and listing by other organizations, such as ETL Testing Laboratories, may be substituted for UL labeling and listing if acceptable to the authority having code enforcement jurisdiction.

INFORMATIONAL COPY ONLY NOT FOR BIDDING

PART 2 – PRODUCTS

2.01 UNDERGROUND ELECTRICAL WORK

A. Materials:

1. Conduits shall be as specified in Section 26 05 33, “Raceways and Boxes for Electrical Systems.”

2. Handholes shall be precast reinforced concrete and shall be suitable for AASHTO HS20 traffic loading. If size is not indicated on the Drawings then the handholes shall be sized as required. Handholes shall be provided by Utility Vault or approved equal.

3. Manholes shall be precast reinforced concrete and shall be suitable for AASHTO HS20 traffic loading. If size is not indicated on the Drawings, then the manholes shall be sized as required but shall be no smaller than 4-foot by 4-foot by 4-foot high (444-LA by Utility Vault). Manholes shall be provided by Utility Vault or approved equal.

4. Provide pulling irons and cable racks for all manholes and for handholes with a perimeter of 10 feet or more (e.g., 3 feet by 2 feet).

5. All hardware shall be stainless steel or hot-dip galvanized after fabrication; cable racking hardware, however, shall be nonmetallic and corrosion resistant.

PART 3 – EXECUTION

3.01 GENERAL

A. All work shall be performed by craftsmen skilled in their trade. All work shall present a neat, finished appearance.

B. Install all equipment in strict accordance with the Manufacturer’s instructions unless directed otherwise. Wherever a conflict occurs between Manufacturer’s instructions, codes, and regulations, or these Contract Documents, follow Engineer’s decision at no additional cost to the Owner. Keep a copy of Manufacturer’s installation instructions on the jobsite available for review at all times.

C. Slope all underground conduits or ducts to provide drainage to a manhole or handhole.

D. In each manhole and handhole identify each conduit and duct using the conduit number shown on the Drawings by means of a stamped brass tag affixed with stainless steel wire. Where affixing tag is not feasible, identify conduits by stenciling. Stencil each exposed conduit for identification at least once in each manhole or handhole.

E. Conduits shall be installed as specified in Section 26 05 33, “Raceways and Boxes for Electrical Systems.”

INFORMATIONAL COPY ONLY - NOT FOR BIDDING

3.02 UNDERGROUND ELECTRICAL WORK

A. Manholes and Handholes:

1. Shall be installed approximately where shown on the Contract Drawings. Exact location shall be reviewed by the Engineer prior to the beginning of installation.

2. Covers shall be flush with finished paved surfaces. In unpaved areas, the top of manhole covers shall be 1 inch above finished grade, or 6 inches above unfinished grade.

3. Pulling irons shall be installed on each wall of the manhole and a recessed ring in the floor of the manhole.

4. At each manhole and handhole, at a convenient location close to a wall, a 3/4-inch by 10-foot ground rod shall be driven. A watertight seal shall be provided. Grounding and bonding shall be per Section 26 05 26, "Grounding and Bonding for Electrical Systems."

5. A minimum of 6 inches of pea gravel shall be utilized as a bed for the setting of each handhole and manhole.

END OF SECTION

INFORMATIONAL COPY ONLY - NOT FOR BIDDING

This Page Intentionally Left Blank

INFORMATIONAL COPY ONLY - NOT FOR BIDDING

SECTION 26 05 53
IDENTIFICATION FOR ELECTRICAL SYSTEMS

PART 1 – GENERAL

1.01 SECTION INCLUDES

A. This section specifies products and procedures used to identify electrical system equipment and components.

1.02 RELATED SECTIONS

A. The work of the following sections is related to the work of this section. Other sections, not referenced below, may also be related to the proper performance of this work. It is the Contractor's responsibility to perform all the work required by the Contract Documents.

1. Section 26 05 11, "General Requirements for Electrical Installation."
2. Section 26 05 19 "Low-Voltage Electrical Power Conductors and Cables."
3. Section 26 05 33, "Raceways and Boxes for Electrical Systems."
4. Section 40 95 73, "Process Control Wiring."

1.03 REFERENCE STANDARDS

A. None.

1.04 SUBMITTALS

A. As specified in Section 26 05 11, "General Requirements for Electrical Installation."

B. Nameplate Schedules.

PART 2 – PRODUCTS

2.01 EQUIPMENT NAMEPLATES

A. Provide nameplates on all new and Owner-furnished equipment.

B. Panel Nameplates: For large equipment such as switchgear, variable frequency drive (VFD) panels, motor starter panels, control panels, electrical equipment enclosures, disconnect switches, motors, and pumps, the nameplates shall be:

1. Located on the enclosure face.
2. Rectangular screw-on type with self-tapping 316 stainless steel screws.

INFORMATIONAL COPY ONLY - NOT FOR BIDDING

3. 1.25-inch-tall laminated phenolic plastic nameplate with white letters on black backgrounds. Length as required.

4. 1/2-inch-high lettering for equipment name with 1/2-inch-high lettering for tag number.

5. Nameplate text shall include:

   a. Line 1: Descriptive name (e.g., “Secondary Clarifier 7 RAS Pump 1”).

   b. Line 2: Descriptive tag (e.g., “46P1801”).

C. Enclosure Nameplates: For small equipment such as local control stations, instrument transmitters, analytical controllers, and terminal boxes, the nameplates shall be:

1. Located on the enclosure face.

2. 1.00-inch-tall, adhesive-backed, laminated phenolic plastic nameplate with white letters on black backgrounds. Length as required.

3. 3/8-inch-high lettering for descriptive tag.

4. Nameplate text shall include:

   a. Line 1: Descriptive name (e.g., “Secondary Clarifier 7 RAS Pump 1”).

   b. Line 2: Descriptive tag (e.g., “46FIT1801” or “46LCP1801”).

D. Component Nameplates – Panel Face: For component identification located on panel face under or near component, the nameplates shall be:

1. 1/2-inch-tall, adhesive-backed, laminated phenolic plastic nameplate with white letters on black backgrounds. Length as required.

2. 3/16-inch-high lettering.

E. Component Nameplates – Back of Face: For component identification located on or near component inside of enclosure, the nameplates shall be:

1. 1/2-inch-tall, adhesive-backed, laminated phenolic plastic nameplate with white letters on black backgrounds. Length as required.

2. 3/16-inch-high lettering.

F. Nameplate schedule shall be included with all equipment submittals.

INFORMATIONAL COPY ONLY - NOT FOR BIDDING

2.02 WIRE MARKERS

A. Identify each power and control conductor at each end of each terminal to which it is connected. Include identification for each spare conductor.

B. Conductors size No. 10 AWG or smaller shall have identification sleeves.

1. Machine print on sleeves with permanent black ink the letters and numbers that identify each wire.

2. Figures: 1/8 inch high.

3. Sleeves: White tubing, sized to fit the conductor insulation.

4. The sleeves shall be shrunk to fit the conductor with hot air after installation.

5. Acceptable Manufacturer:

a. TMS Thermofit Marker System by Raychem Co.

b. Sleeve style wire marking system by W. H. Brady Co.

c. Approved equal.

6. Adhesive strips are not acceptable.

C. Use cable markers of the locking tab type for conductors No. 8 AWG and larger.

1. Tabs: White plastic with conductor identification number permanently embossed.

2.03 RACEWAY NUMBERING SYSTEM

A. General:

1. Each conduit, rack, and tray shall be identified by a unique number shown in the Drawings. If numbering is not provided on the Drawings, then the Contractor shall provide a unique numbering scheme and document for inclusion on the Record Drawings.

B. Conduit Identification Tag:

1. Pressure stamp conduit numbers into a non-corrosive metal tag. Fix a tag with number to each end of each conduit and at each manhole, pullbox and handhole with Type 304 Stainless Steel wire.

INFORMATIONAL COPY ONLY - NOT FOR BIDDING

PART 3 – EXECUTION

3.01 GENERAL

A. Label all new and Owner-furnished electrical and control equipment.

3.02 CONDUCTOR IDENTIFICATION

A. Identify each wire or cable at each termination and in each pull box, junction box, handhole, and manhole using numbered and lettered wire markers. All electrically-common conductors shall have the same number. Each electrically-different conductor shall be uniquely numbered. Identify panelboard circuits using the panelboard identification and circuit number. Identify motor control circuits using the equipment identification number assigned to the control. Identify other circuits as shown in the circuit schedule or as favorably reviewed by the Engineer.

B. Conductor numbering shall be coordinated with the numbering scheme developed for the Pre-Fabricated Intermodal Containers, Section 13 34 20.

C. Conductors between terminals of different numbers shall have both terminal numbers shown at each conductor end. The terminal number closest to the end of the wire shall be the same as the terminal number.

D. Conductors No. 8 and smaller shall be identified by printed sleeve of the heat-shrink type. All such sleeves shall be shrunk to the conductor insulation.

E. Contractor is responsible to identify every termination at this site except for light switch and outlet terminations, whether Contractor terminated them or terminations were made by others.

F. It shall not be required to identify equipment ground wires except by green color.

3.03 SWITCH AND OUTLET BOXES

A. Label light switches and outlets with panel name and circuit number.

END OF SECTION

INFORMATIONAL COPY ONLY - NOT FOR BIDDING

SECTION 26 05 73

SHORT CIRCUIT, COORDINATION, AND ARC FLASH REPORT

PART 1 – GENERAL

1.01 SUMMARY

A. Section Includes:

1. Provide the services of a recognized independent testing laboratory or coordination analysis consultant to provide the following reports:

   a. Short Circuit Report.

   b. Protective Device Coordination Report.

   c. Arc Flash Report.

2. The work of the following sections is related to the work of this section. Other sections, not referenced below, may also be related to the proper performance of this work. It is the Contractor's responsibility to perform all the work required by the Contract Documents.

   a. Section 26 05 11, "General Requirements for Electrical Installation."

1.02 REFERENCE STANDARDS

A. Institute of Electrical and Electronic Engineers (IEEE) Publications:

1. IEEE 141: Recommended Practice for Electric Power Distribution for Industrial Plants.

2. IEEE 242: Recommended Practice for Protection and Coordination of Industrial and Commercial Power Systems.

3. IEEE 1584: IEEE Guide for Performing Arc-Flash Hazard Calculations.

4. NFPA 70: National Electric Code.

5. NFPA 70E: Standard for Electrical Safety Requirements for Employee Workplaces.

6. OSHA 29-CFR: Occupational Safety and Health Standards: Electrical Part 1910 Subpart S.

1.03 SUBMITTALS

A. Procedures: As specified in Section 26 05 11, "General Requirements for Electrical Installation."

B. Provide separate submittal for each project site/location.

INFORMATIONAL COPY ONLY- NOT FOR BIDDING

C. Submit the name and the qualifications of the laboratory or consultant for review by the Engineer. Qualifications must include professional registration of proposed personnel as electrical engineers.

D. Certified Short Circuit, Coordination, and Arc Flash Reports.

E. Arc flash warning labels.

F. Submittal schedule:

1. Submit a draft Short Circuit, Coordination, and Arc Flash Report prior to the Contractor seeking an Electrical Permit if the Authority Having Jurisdiction (e.g. electrical inspector) requires review of project short circuit, coordination, arc flash and/or related information prior to the issuance of an Electrical Permit.

2. Submit the Short Circuit, Coordination, and Arc Flash Report immediately following the favorable submittal review of the equipment included in this Report but prior to the manufacture of the equipment included in this Report.

3. Resubmit the Short Circuit, Coordination, and Arc Flash Report as necessary to capture changes made to the electrical system architecture and/or the associated components.

1.04 QUALITY ASSURANCE

A. Qualifications:

1. Prepared by recognized independent testing laboratory or coordination analysis consultant who is regularly engaged in power system studies.

B. Certification: Short Circuit, Coordination, and Arc Flash Reports to be stamped and signed by an electrical engineer registered in the State of Washington.

PART 2 – PRODUCTS

2.01 SHORT CIRCUIT, COORDINATION, AND ARC FLASH REPORTS

A. Scope of Effort:

1. Perform the studies using actual equipment data. The Contractor is responsible to acquire the equipment and system information required for the reports specified in this section for both new and existing equipment.

2. The reports shall include available fault current and protection (fuse) information from the electrical utility, Grant County PUD (GCPUD). Contact GCPUD for this information.

INFORMATIONAL COPY ONLY- NOT FOR BIDDING

3. The reports shall include the equipment shown on the One-Line diagram and include, but not be limited to, the following major components:

    a. Utility Source.

    b. Main Circuit Breaker, MCB-1.

    c. Main Distribution Panel, MDP-1.

    d. Transformer, XFMR-1.

    e. Panel Board, PBD-1.

    f. Liquid Treatment Train (LTT) Container No. 1. The scope of the reports shall include equipment located within the LTT including, but not limited to, the container 480 V power distribution system, Main Control Panel, 480 V disconnect switches and 208/120 lighting panel. The report scope shall extend until it can be shown through calculation that less than 10 kA of fault current is present and that PPE is no longer required to mitigate the arc flash hazard.

    g. Vapor Treatment Train Container No. 2. The scope of the reports shall include equipment located within the VTT including, but not limited to, the container 480V power distribution system and 480V disconnect switches. The report scope shall extend until it can be shown through calculation that less than 10 kA of fault current is present and that PPE is no longer required to mitigate the arc flash hazard.

B. Coordination Objective:

1. The protective device on the line side closest to the fault or abnormal conditions shall isolate the problem portion of the system and minimize damage in that portion. The rest of the system shall be maintained in normal service. The coordination shall be in conformance with the recommendations of latest IEEE Standard 242.

2. Use the circuit breaker manufacturer's selective coordination tables to determine coordination in the instantaneous trip region.

C. Report Submittals:

1. Schedule:

    a. Submit Short Circuit, Coordination, and Arc Flash Reports with equipment submittals.

    b. Provide and install arc flash labels prior to commissioning.

2. Submit the analysis, which shall include impedance and short-circuit calculations, list of any assumptions made in the analysis, the recommended settings of the protective devices, and the system time/current characteristic curves. The submittal shall be made so as to allow time for review and resubmittal, if necessary, before the implementation of final settings and adjustments by the testing laboratory.

INFORMATIONAL COPY ONLY - NOT FOR BIDDING

3. Short Circuit Report: As a minimum, include the following in the report:

    a. Equipment manufacturer's information used to prepare the study.

    b. Assumptions made during the study.

    c. Short circuit calculations listing short circuit levels at each bus.

    d. Evaluation of the electrical power system and the model numbers and settings of the protective devices associated with the system.

    e. Time-current curves including the instrument transformer ratios, model numbers of the protective relays, and the relay settings associated with each breaker.

    f. Comparison of short circuit duties of each bus to the interrupting capacity of the equipment connected to that bus.

4. Protective Device Coordination Report: As a minimum, include the following on 5-cycle, log-log graph paper:

    a. Time-current curve for each protective relay or fuse showing graphically that the settings will allow protection and selectively within Industry standards. Identify each curve and specify the tap and time dial setting.

    b. Time-current curves for each device to be positioned for maximum selectivity to minimize system disturbances during fault clearing. Where selectivity cannot be achieved, notify the Project Representative as to the cause.

    c. Time-current curves and points for cable and equipment damage.

    d. Circuit interrupting, device operating, and interrupting times.

    e. Indicate maximum fault values on the graph.

    f. Sketch of bus and breaker arrangement.

5. Arc Flash Report: As a minimum, include the following in the report:

    a. Equipment manufacturer's information used to prepare the study.

    b. Assumptions made during the study.

    c. Reduced copy of the one line drawing.

    d. Arc flash evaluations summary spreadsheet including:

        1) Bus name.

        2) Upstream protective device name, type, settings.

        3) Bus line to line voltage.

INFORMATIONAL COPY ONLY - NOT FOR BIDDING

4) Bus bolted fault.

5) Protective device bolted fault current.

6) Arcing fault current.

7) Protective device trip/delay time.

8) Breaker opening time.

9) Solidly grounded column.

10) Equipment type.

11) Gap.

12) Arc flash boundary.

13) Working distance.

14) Incident energy.

15) Required protective fire rated clothing type and class.

e. Bus detail sheets.

f. Arc flash warning labels printed in color on adhesive-backed labels.

1) Arc flash warning labels are to be produced and attached to each piece of electrical equipment included in the scope of these reports.

2) These labels must indicate approach boundaries, incident energy level, and the minimum PPE that is required when servicing the equipment within the arc flash boundary.

3) Labels shall be installed by Contractor on associated equipment.

PART 3 – EXECUTION

3.01 GENERAL

A. Perform the studies in accordance with:

1. IEEE Standards 141, 242, and 1584.

2. NFPA 70E.

3. OSHA 29-CFR, Part 1910 Subpart S.

INFORMATIONAL COPY ONLY NOT FOR BIDDING

B. Perform the studies using actual equipment data.

C. Contractor shall adjust the settings of overcurrent and protection devices per the recommendations of the Coordination Report during equipment testing and commissioning.

END OF SECTION

INFORMATIONAL COPY ONLY - NOT FOR BIDDING

SECTION 26 22 13

LOW-VOLTAGE DISTRIBUTION TRANSFORMERS

PART 1 – GENERAL

1.01 SUMMARY

A. Provide transformers as shown on the Drawings, as specified herein, and as needed for a complete and proper installation.

1.02 SUBMITTALS

A. As specified in Section 26 05 11, "General Requirements for Electrical Installation."

B. Manufacturer's product literature including the following nameplate data:

1. kVA rating.
2. Nominal primary voltage.
3. Tap voltages.
4. Nominal secondary voltage.
5. Percent impedance.
6. Weight.
7. Physical dimensions and mounting requirements.
8. Efficiency.

C. Manufacturer's verification that the unit has been built and tested in accordance with the specified ANSI standards.

D. Manufacturer's verification of the sound levels of each unit if different from the specified NEMA ST20 standards.

E. Operation and Maintenance information.

F. Manufacturer's certification of compliance and calculations that the equipment meets the seismic requirements specified in Section 26 05 11, "General Requirements for Electrical Installation," Section 13 05 41, "Seismic Restraint Requirements for Nonstructural Components," and in this section.

1.03 QUALITY ASSURANCE

A. Comply with the following requirements:

1. NFPA 70 National Electrical Code (NEC).
2. Local codes and ordinances.

INFORMATIONAL COPY ONLY - NOT FOR BIDDING

1.04 FACTORY TESTING

A. Tests on transformers shall include the manufacturer's standard tests, including winding resistance, ratio, polarity, phase relation, no load loss, impedance, full load losses, and dielectric tests. Certified copies shall show compliance with all referenced standards.

1.05 DELIVERY, STORAGE, AND HANDLING

A. Comply with pertinent provisions of Division 01 and manufacturer's requirements.

PART 2 – PRODUCTS

2.01 ACCEPTABLE MANUFACTURER

A. The use of a manufacturer's name, model, size, or catalog number is for the sole purpose of establishing the standard of quality and general configuration desired.

B. The equipment provided shall be by one of the manufacturers listed below. Engineer listing of the manufacturers and models does not guarantee that these manufacturers comply with the Contract Documents. Comply with all requirements of the Contract Documents and demonstrate such through submittals, equipment, performance, and other requirements.

1. Square D.
2. Cutler Hammer.
3. General Electric.
4. Approved Equal.

2.02 GENERAL PURPOSE TRANSFORMERS

A. Provide transformers manufactured and tested to meet or exceed NEMA ST 20, UL 1562, 10 CFR Part 431, ANSI C57.12, and IEEE standards for premium efficiency.

B. Provide kVA rating and voltages as shown on the Drawings.

C. Provide overload capacity of not less than 10 percent for intermittent operation.

D. Construct transformer to include:

1. Below 30 kVA: Class F or better insulation having a 115 degree C rise average maximum over a 40 degree C ambient temperature.
2. 30 kVA and Above: Class H or better insulation having a 150 degree C rise average maximum over a 40 degree C ambient temperature.
3. High grade, non-aging cores with sheet silicone steel laminations having core plating insulation on both sides of each lamination.
4. Two 2-1/2-percent primary taps above and below nominal voltage.

INFORMATIONAL COPY ONLY- NOT FOR BIDDING

E. Provide enclosure for transformer mounted outside of motor control center (MCC):

1. Provide sheet steel, phosphatized having one prime coat and two finish coats of baked enamel finish.

2. Maximum temperature for top of enclosure not to exceed 90 degrees C.

2.03 CONTROL TRANSFORMERS

A. Provide UL listed transformers designed to handle high in-rush currents associated with contactors and relays.

B. Provide continuous VA rating; size for 1.25 times capacity required for all components in circuit.

2.04 NAMEPLATES

A. Nameplates: Per Section 26 05 53, “Identification for Electrical Systems.”

PART 3 – EXECUTION

3.01 INSTALLATION

A. Install transformers in accordance with manufacturer’s recommendations and as indicated on the Drawings.

B. Install wall-mounted transformers on prefabricated brackets designed for that purpose.

C. Install floor-mounted transformers on 4-inch concrete pad.

D. Provide flexible, liquid-type metallic conduit to prevent the transmission of sound through the conduit system.

E. Install potted, non-ventilated types below 30 kVA on resilient vibration-isolating mountings.

F. Adjust voltage taps for required system voltage when necessary.

G. Ground transformer in accordance with NEC requirements for separately derived systems.

H. Lash secondary conductors to resist short circuit forces. Follow manufacturer’s recommendations.

3.02 FIELD TESTS

A. Test per NETA Paragraph 7.2.3. Submit results for review.

END OF SECTION

INFORMATIONAL COPY ONLY - NOT FOR BIDDING

This Page Intentionally Left Blank

INFORMATIONAL COPY ONLY - NOT FOR BIDDING

SECTION 26 24 16
PANELBOARDS

PART 1 – GENERAL

1.01 SUMMARY

A. This section specifies panelboards for lighting and power distribution.

1. Related Sections: The work of the following sections is related to the work of this section. Other sections, not referenced below, may also be related to the proper performance of this work. It is the Contractor's responsibility to perform all the work required by the Contract Documents.

a. Section 26 05 11, "General Requirements for Electrical Installation."

b. Section 26 05 53, "Identification for Electrical Systems."

c. Section 26 43 00, "Surge Protective Devices."

B. The estimated size of the electrical load for the VTT and LTT containers must be submitted and receive favorable review prior to procuring equipment and providing services related to the Main Distribution Panelboard, MDP-1. See Section 13 34 20.

1.02 SUBMITTALS

A. As specified in Section 26 05 11, "General Requirements for Electrical Installation."

B. Manufacturer's data including:

1. Panelboard type and ratings.

2. Overall panelboard dimensions.

3. Lug size.

4. Bus material.

5. Breaker types, trip ratings and interrupt ratings.

C. Nameplate and Panel Schedule.

D. Operation and Maintenance information.

1.03 QUALITY ASSURANCE

A. Referenced Standards: This section incorporates by reference the latest revision of the following documents. These references are a part of this section as specified and

INFORMATIONAL COPY ONLY–NOT FOR BIDDING

modified. In case of conflict between the requirements of this section and those of the listed documents, the requirements of this section shall prevail.

Reference	Title
IBC	International Building Code – Seismic compliance requirements
NEMA PB 1	Panelboards
NEMA AB 1	Molded Case Circuit Breakers

Reference	Title
NFPA 70	National Electrical Code (NEC)
UL 50	Enclosures for Electrical Equipment
UL 67	Panelboards
UL 489	Molded-Case Circuit Breakers, Molded-Case Switches, and Circuit Breaker Enclosures

B. Source Quality Control: Listed and labeled by Underwriter's Laboratories, Inc. (UL), ETL, or Canadian Standards Association.

1.04 PROJECT/SITE CONDITIONS

A. As specified in Section 26 05 11, "General Requirements for Electrical Installation."

1.05 WARRANTY

A. Provide a 1-year warranty from the Final Acceptance Date which includes material, labor, and travel.

PART 2 – PRODUCTS

2.01 GENERAL

A. Series short circuit ratings for protective devices are not allowed.

2.02 ACCEPTABLE MANUFACTURER:

A. The use of a manufacturer's name, model, size, or catalog number is for the sole purpose of establishing the standard of quality and general configuration desired.

B. The equipment provided shall be by one of the manufacturers listed below. Engineer listing of the manufacturers and models does not guarantee that these manufacturers comply with the Contract Documents. Comply with all requirements of the Contract Documents and demonstrate such through submittals, equipment, performance, and other requirements.

1. Square D.

2. Cutler Hammer.

3. Siemens.

INFORMATIONAL COPY ONLY - NOT FOR BIDDING

2.03 PANELBOARDS

A. Ratings: Voltage, current and short circuit ratings as shown on Drawings.

B. Arrangement and Construction:

1. Circuit breaker, dead front type, with bus bar construction.

2. Panel Front: Concealed trim clamps and hinges.

3. Locks: Flush with cylinder, tumbler-type with spring loaded door pulls.

4. Non-removable fronts with doors in the locked position.

5. Panelboard Locks: Keyed alike.

6. Gutter space on all sides of the breaker assembly to neatly connect and arrange incoming wiring.

7. Panelboard: Composed of individually-mounted circuit breakers designed to be removable without disturbing other breakers.

8. Mount a directory holder with clear plastic plate and metal frame on the inside of the door.

9. Each main and branch circuit breaker shall be equipped with approved lock-out hardware integrated with the Panelboard for locking the circuit breaker handle in the OFF position.

C. Bus:

1. Tin-plated copper with current ratings as shown on the panelboard schedules, sized in accordance with UL 67.

2. Determine ratings by temperature rise test.

3. Minimum Size: 100 A.

4. Panel Fault Withstand Rating: Equal to the interrupting rating of the smallest circuit breaker in the panel.

5. Other Buses: Panelboards shall be provided with a separate ground bus and a full capacity neutral bus.

D. Circuit Breakers:

1. Circuit Breakers: Molded-case type provided for the current ratings and pole configurations specified on the panelboard schedule.

2. Rated 120/208 Vac and 120/240 Vac: Minimum interrupting current rating of 10,000 A (symmetrical) at 240 Vac.

INFORMATIONAL COPY ONLY NOT FOR BIDDING

3. Bolt-on Type.

4. Listed in accordance with UL 489 for the service specified.

5. Load Terminals: Solderless connectors.

6. Where used for LED lighting, circuit breakers shall be rated for the associated LED driver inrush current.

E. Enclosure: Type 1 box and front.

F. Panelboard Finish:

1. Cabinet: Fabricated from hot-dip galvanized steel in accordance with UL 50.

2. Fronts: ANSI 61 – gray, baked enamel finish.

G. Nameplates: Provided in accordance with the requirements of Section 26 05 33, "Raceways and Boxes for Electrical Systems."

H. Surge Protective Device (SPD): Provide integrally mounted SPD where shown on Drawings.

PART 3 – EXECUTION

3.01 TESTING

A. Test for proper operation and function.

3.02 SCHEDULE

A. Panelboards are scheduled on the Drawings.

B. Type in the circuit description on the circuit directory or panelboard schedule.

END OF SECTION

INFORMATIONAL COPY ONLY - NOT FOR BIDDING

SECTION 26 27 16
ELECTRICAL CABINETS AND ENCLOSURES

PART 1 – GENERAL

1.01 SUMMARY

A. Work includes:

1. Installation of all necessary outlet boxes for wiring devices, lighting fixtures, and signal equipment as noted on the Drawings.

2. Installation of junction boxes as required for the consolidation of conduit runs.

3. Installation of pull boxes as necessary to aid in pulling in conductor.

1.02 REFERENCE STANDARDS

A. This section incorporates by reference the latest revision of the following documents. These references are a part of this section as specified and modified. In case of conflict between the requirements of this section and those of a listed document, the requirements of this section shall prevail.

1. ASTM A123: Specification for Zinc (Hot-Dip Galvanized) Coatings on Iron and Steel Products.

2. FS W-C-586C: Conduit Outlet Boxes, Bodies, and Entrance Caps, Electrical, Cast Metal.

3. FS W-J-800: Junction Box, Extension, Junction Box Cover, Junction Box (Steel, Cadmium or Zinc Coated).

4. NEC 70: National Electrical Code.

5. NEMA 250: Enclosures for electrical Equipment (1000 Volts Maximum)

6. UL 50: Enclosures for Electrical Equipment.

7. UL 514A: Metallic Outlet Boxes.

8. UL 514B: Fittings for Cable and Conduit.

9. UL 514C: Nonmetallic Outlet Boxes, Flush Device Boxes, and Covers.

10. UL 514D: Cover Plates for Flush-Mounted Wiring Devices.

1.03 SUBMITTALS

A. Shop Drawings and product data.

INFORMATIONAL COPY ONLY–NOT FOR BIDDING

PART 2 – PRODUCTS

2.01 OUTLET BOXES

A. Sheet Metal Boxes:

1. Sheet metal boxes shall conform to UL 50, with a hot-dipped galvanized finish conforming to ASTM A123.

2. Outlet boxes and switch boxes shall be designed for mounting flush wiring devices. Boxes and box-extension rings shall be provided with knockouts. Boxes shall be formed in one piece from carbon steel sheets. Outlet boxes shall not be less than 4 inches square and 1-1/2 inches deep.

3. Ceiling boxes shall withstand a vertical force of 200 pounds for 5 minutes.

4. Wall boxes shall withstand a vertical downward force of 50 pounds for 5 minutes.

5. Gangable and through-wall types are not acceptable.

6. Boxes shall conform to FS W-J-800D and UL 514A and UL 514C.

B. Cast Metal Boxes:

1. Box bodies and cover shall be cast or malleable iron with a minimum wall thickness of 1/8 inch at every point, and not less than 1/4 inch at tapped holes for rigid conduit. Bosses are not acceptable.

2. Mounting lugs shall be provided at the back or bottom corners of the body.

3. Covers shall be secured to the box body with No. 6 or larger brass or bronze flathead screws.

4. Boxes shall be provided with neoprene cover gaskets.

5. Where only cast aluminum is available for certain types of fixture boxes, an epoxy finish shall be provided.

6. Outlet boxes shall be of the FS types. Boxes shall conform to FS W-C-586C, UL 514A, and UL 514C.

2.02 TERMINAL CABINETS:

A. Provide enclosure type as specified below in this section.

B. Enclosures shall be provided with hinged doors.

C. Adjustable terminal strip mounting accessories shall be provided.

INFORMATIONAL COPY ONLY - NOT FOR BIDDING

D. Enclosures shall be provided with channel mounted terminal blocks.

E. Power terminals shall be rated 30 A, 600 Vac and shall be No. 8 minimum strap-screw type, suitable for ring tongue or locking spade terminals.

F. Control terminals:

1. Rating: 600 V for signals greater than 30 V and 300 V for signals less than 30 V.

2. Heavy-duty double-screw type with strap screw clamp, and mounted on mounting channels. The terminal block and terminal lug shall be compatible.

3. Manufacturers and Products: Entrelec or Allen-Bradley Part No. 1492-H1 for control signal.

4. Provide at least 15 percent spare terminals.

G. Provide permanent typewritten terminal block identification for all terminals. Identify each terminal with the same number as the wire being terminated.

2.03 ENCLOSURE TYPE

A. Unless otherwise specified, provide enclosures as follows per NEMA 250 and UL 50. Where conflicting requirements are encountered in the selection of enclosure type assume the use of the highest cost, highest performance, most protective enclosure type suitable for the given location and request guidance from the Engineer:

1. Dry Locations: Type 1.

2. Outdoor Locations: Type 4X, stainless steel.

3. Indoor Process Areas, Non-Corrosive: Type 4.

4. Indoor, Wet Locations: Type 4.

5. Indoor, Damp Locations: Type 12.

6. Corrosive Locations: Type 4X, Stainless Steel.

7. Classified Locations: Type 7. Provide enclosure types which comply with the NEC 70, Article 500 area classification requirements specified on the Contract Plans and / or Specifications.

8. Note that hosedown locations include those locations likely to be cleaned or washed during normal operations. These locations include chemical storage and loading areas and other areas where hose bibs are installed to facilitate hosedown.

INFORMATIONAL COPY ONLY - NOT FOR BIDDING

PART 3 – EXECUTION

3.01 INSTALLATION

A. Provide fixture outlets with proper fixture connectors.

B. Box mounting height shall be dictated by the wiring device enclosed.

C. Blanking covers shall be installed on all unused openings.

D. Sheet metal boxes shall be used in dry noncorrosive locations where the conduit system is routed concealed in the walls and ceilings.

E. Cast metal or molded nonmetallic surface-mounted boxes shall be used in exterior and/or in all wet locations.

F. Bonding jumpers shall be used around all concentric or eccentric knockouts.

G. Boxes shall be securely mounted to the building structure independent of conduits entering or exiting the boxes.

H. No top conduit entry for outdoor enclosures, damp or wet locations, or for NEMA 3R, 4 and 4X enclosures.

END OF SECTION

INFORMATIONAL COPY ONLY - NOT FOR BIDDING

SECTION 26 27 26

WIRING DEVICES

PART 1 – GENERAL

1.01 SECTION INCLUDES

A. Work Included:

1. Installation, connection, and furnishing of all single, duplex, GFI, and special purpose receptacles complete with wall plates and/or covers as shown on the Drawings.

2. Installation, connection, and furnishing of all single-pole, three-way, pilot lights, and momentary position toggle switches complete with wall plates and/or handle operators as shown on the Drawings.

B. Related Sections:

1. The work of the following sections is related to the work of this section. Other sections, not referenced below, may also be related to the proper performance of this work. It is the Contractor's responsibility to perform all the work required by the Contract Documents.

   a. Section 26 05 11, "General Requirements for Electrical Installation."

   b. Section 26 05 53, "Identification for Electrical Systems."

1.02 REFERENCE STANDARDS

A. ANSI C73: Plugs and Receptacles.

B. ANSI C73a: Plugs and Receptacles.

C. FS W-C-596 D and E: General Specifications for Cable Outlet Electrical Connector.

D. FS W-S-896 D and E: General Specifications for Flush Mounted Toggle and Lock Switches.

E. NEMA WD 1: General Requirements for Wiring Devices.

F. NEMA WD 6: Wiring Devices – Dimensional Requirements.

G. UL 20-11, 20-12: General-Use Snap Switches.

H. UL 498: Electrical Attachment Plugs and Receptacles.

I. UL 514A: Metallic Outlet Boxes.

J. UL 514B: Fittings for Cable and Conduit.

INFORMATIONAL COPY ONLY- NOT FOR BIDDING

K. UL 514C: Nonmetallic Outlet Boxes, Flush Device Boxes, and Covers.

L. UL 514D: Cover Plates for Flush-Mounted Wiring Devices.

M. UL 943: Ground Fault Circuit Interrupters.

N. UL 943A, 943B: Leakage Current Protection.

1.03 SUBMITTALS

A. Shop Drawings and product data.

1.04 QUALITY ASSURANCE

A. Source Quality Control:

1. Products shall be listed and labeled by an approved Nationally Recognized Testing Lab (NRTL) such as Underwriter's Laboratories, Inc. (UL), ETL, or Canadian Standards Association.

PART 2 – PRODUCTS

2.01 RECEPTACLES

A. General: Receptacles shall be specification grade, heavy-duty, high-abuse, grounding type conforming to NEMA configurations, NEMA WD1, and UL 498 Standards.

B. Single and Duplex Receptacles:

1. Receptacles shall be of back and side wire design utilizing screw-type terminals. Receptacles shall be rated 20 A, two-pole, three-wire, 120 V, NEMA 5-20 configuration, self-grounding. Color shall be brown in industrial areas and ivory or white in office and laboratory areas. Power contacts shall be a T-type design and shall be brass. Ground contacts shall be brass.

2. Devices shall have a nylon composition face with a nylon or melamine body. Units shall comply with Federal Specification W-C-596E and meet UL 498 test requirements. Receptacles shall be Hubbell HBL5362, or equal.

C. Special Purpose Receptacles: Receptacles shall be of the amperage, voltage, and NEMA configuration indicated on the Drawings. Compliance to standards and tests shall be as listed in Item B above.

INFORMATIONAL COPY ONLY - NOT FOR BIDDING

D. GFI Receptacles:

1. Device shall be rated 20 A, two-pole, three-wire, 120 V, conforming to NEMA WD1.10 configuration. Face shall be nylon composition meeting UL 498 test standards. Unit shall have test and reset push buttons and LED indicator.

2. GFCI component shall meet UL 943 Class A standards with a tripping time of 1/40 second at 5 mA current unbalance. Operating range shall extend from 31 degrees F to 158 degrees F. Unit shall have transient voltage protection and shall be ceramic encapsulated for protection against moisture.

3. Provide Hubbell GF20 or equal.

E. Isolated Ground Receptacles: Units shall comply with standards listed in Item B above, but shall have the ground contacts well isolated from the body mounting strap and shall be connected only to the separate grounding screw. Face color shall be orange to identify this feature. Provide Hubbell Catalog No. IG5262, IG5362; Daniel Woodhead; or equal.

F. Corrosion-Resistant Receptacles: Units shall comply with standards listed in Item B above, but shall also have tin-nickel-plated brass connecting equipment and stainless steel hardware. Receptacle face color shall be yellow to identify the device as having these special qualities. Provide Hubbell Catalog No. HBL53CM62 or equal.

G. Load-Break Power Receptacles: Special purpose receptacles shall be of the amperage and voltage rating, number of poles, and pin configuration indicated on the Drawings. Units shall be supplied with matching plugs and shall be capable of interrupting, without any device damage, the full amperage rating.

H. Surface Multiple-Outlet Assemblies: Units shall have outlets on center-to-center spacing as indicated on the Drawings. Assembly shall conform to Article 353 of the NEC and receptacles shall conform to the standards listed in Item A above.

2.02 SWITCHES

A. Line-Voltage Types: Switches shall be rated 20 A at 120 V or 277 V, ac only. Units shall be flush-mounted, self-grounding, quiet-operating toggle devices. Handle color shall be brown in industrial areas and white or ivory in office and laboratory areas. Units shall conform to Federal Specifications W-S-896 D and E, UL 20-11 and UL 20-2, and NEMA WD1 Standards. Hubbel HBL1221 or equal.

B. Low-Voltage Types: Switches shall meet all of the requirements listed in Item A above except to be rated at 15 A for switching 24 Vdc. Devices shall be three-position, momentary-contact, spring-return, center “off” configuration.

C. Manual Motor Starters: For 120 V, single phase motors that require a lockable disconnect, provide a padlockable manual motor starter without overloads.

D. Where used for LED lighting, switches shall be rated for the associated LED driver inrush current.

INFORMATIONAL COPY ONLY - NOT FOR BIDDING

2.03 PLATES AND COVERS

A. General: Plates shall be of the style and color to match the wiring devices, and of the required number of gangs. Plates shall conform with NEMA WD1, UL 514, and ANSI C73. Plates on finished walls shall be nonmetallic or stainless steel. Plates on unfinished walls and on fittings shall be of zinc-plated steel or cast metal having rounded corners and beveled edges.

B. Nonmetallic: Plates shall be smooth finish with contoured edges and shall be nylon or fiberglass.

C. Stainless Steel: Plates shall be 0.035 inches thick with beveled edges and shall be manufactured from No. 302 alloy having a brushed or satin finish.

D. Galvanized: Plates shall be galvanized sheet steel raised 1/2 inch, with rounded corners.

E. Cast Metal: Plates shall be cast or malleable iron covers with gaskets so as to be moisture resistant or weatherproof.

F. Blank Plates: Cover plates for future telephone or television outlets shall match adjacent device wall plates in appearance.

G. Damp or Wet and Corrosive Locations: Plates shall have weather protective double doors. Material of manufacture shall be die-cast aluminum for metallic plates or nylon for nonmetallic plates.

H. Outdoor Locations: While-in-use style weatherproof cover, cast metal while-in-use cover, padlockable in the closed position, Hubble or equal.

PART 3 – EXECUTION

3.01 INSTALLATION OF WIRING DEVICES

A. Dry Locations: The device shall be installed in flush-mounted boxes with washers as required to bring the device mounting strap level with the surface of the finished wall.

B. Damp or Wet Exterior Locations: Install only wiring devices approved for outdoor service in these locations.

C. Mounting Heights:

1. Locations of wall outlets shall be measured from the finished floor to the center of the outlet box. Boxes shall be adjusted so that the front edge of the box shall not be further back from the finished wall plane than 1/4 inch. Boxes shall be adjusted so that they do not project beyond the finished wall. Height above finished floor shall be as follows:

    a. Telephone Outlets – Office Areas: 12 inches from floor.

    b. Telephone Outlets – Industrial Areas: 60 inches from floor.

INFORMATIONAL COPY ONLY - NOT FOR BIDDING

c. Duplex Receptacles – Office Areas: 12 inches from floor.

d. Receptacles – Industrial Areas: 46 inches from floor.

e. Toggle Switches: 46 inches from floor.

f. Clock Outlets: 84 inches from floor.

D. Damp or Wet Interior Locations:

1. Install only wiring devices approved for outdoor service.

2. Adjust boxes so that front edge will be 1/4 inch beyond the rear edge of the finished wall.

3. Use metal tubing sleeves to bring device-mounting straps flush with the front edge of the finished wall.

E. Receptacles:

1. Receptacles shall be grounded by a grounding conductor, not by a yoke or screw contact.

2. Receptacles shall be oriented so that the grounding slot is located at the top of the outlet.

3. Receptacles shall be installed with connections pigtailed (spliced) to the branch circuit wiring so that removal of the receptacle will not lose neutral continuity and branch circuit power will not be lost to other receptacles on the same circuit.

3.02 INSTALLATION OF WALL PLATES

A. General: Plates shall match the style of the device and shall be plumb within 1/16 inch of the vertical or horizontal.

B. Interior Dry Locations: Install plates so that all four edges are in continuous contact with the finished wall surfaces. Plaster filling will not be permitted. Do not use oversize plates or sectional plates.

C. Exterior and/or Wet Locations: Install plates with gaskets on wiring devices in such a manner as to provide a rain-tight weatherproof installation. Cover type shall match box type.

D. Future Locations: Install blanking cover plates on all unused outlets.

INFORMATIONAL COPY ONLY - NOT FOR BIDDING

3.03 TESTS

A. Receptacles:

1. Receptacles shall be tested for blade and ground-plug tension prior to installation. Do not install any receptacle having less than 16-ounce individual blade retention.

2. After installation of receptacles, circuits shall be energized and each receptacle tested for proper ground continuity, reversed polarity, and/or open neutral condition.

B. GFI receptacles shall be tested with the circuits energized. Devices shall be tested with a portable GFI receptacle tester capable of circulating 7.5 mA of current, when plugged in, between the “hot” line and “ground” to produce tripping of the receptacle. Resetting and tripping shall be checked at least twice at each GFI receptacle.

END OF SECTION

INFORMATIONAL COPY ONLY - NOT FOR BIDDING

SECTION 26 28 16

ENCLOSED SWITCHES AND CIRCUIT BREAKERS

PART 1 – GENERAL

1.01 SECTION INCLUDES

A. Provide circuit protective devices as shown on the Contract Drawings, as specified herein, and as needed for a complete and proper installation.

B. The estimated size of the electrical load for the VTT and LTT containers must be submitted and receive favorable review prior to procuring equipment and providing services related to the Main Circuit Breaker, MCB-1. See Section 13 34 20.

1.02 RELATED SECTIONS

A. The work of the following sections is related to the work of this section. Other sections, not referenced below, may also be related to the proper performance of this work. It is the Contractor's responsibility to perform all the work required by the Contract Documents.

1. Section 26 05 11, "General Requirements for Electrical Installation."

2. Section 26 05 53, "Identification for Electrical Systems."

1.03 REFERENCE STANDARDS

A. ANSI Z55.1: Gray Finishes for Industrial Apparatus and Equipment.

B. NEMA ICS 3: Industrial Systems.

C. NEMA ICS 6: Enclosures for Industrial Controls and Systems.

D. NEMA 250: Type 1 Enclosures for Electrical Equipment (1,000 Volts Maximum).

E. FS W-C-375: Circuit Breakers, Molded Case, Branch Circuit and Series Service, Series Trip.

F. FS W-F-1726: Class H Cartridge Fuses.

G. NEMA 250: Enclosures for electrical Equipment (1000 Volts Maximum)

H. UL 50: Enclosures for Electrical Equipment.

I. UL 198C: Fuses, High-Interrupting-Capacity-Current Limiting Types.

J. UL 489-9: Molded Case Circuit Breakers, Molded Case Switches, and Circuit Breaker Enclosures.

K. UL 698: Industrial Control Equipment for Use in Hazardous (Classified) Locations.

INFORMATIONAL COPY ONLY - NOT FOR BIDDING

L. UL 894: Switches for Use in Hazardous (Classified) Locations.

M. NFPA 70: National Electric Code.

1.04 SUBMITTALS

A. As specified in Section 26 05 11, “General Requirements for Electrical Installation.”

B. Catalog Cut Sheets.

C. Shop Drawings.

D. Circuit breaker specifications and coordination curves.

E. Nameplates.

1.05 QUALITY ASSURANCE

A. Source Quality Control:

1. Products shall be listed and labeled by an approved Nationally Recognized Testing Lab (NRTL) such as Underwriter’s Laboratories, Inc. (UL), ETL, or Canadian Standards Association.

1.06 WARRANTY

A. Warranty Period: The warranty period shall extend 12 months after final commissioning of the permanent pump station.

PART 2 – PRODUCTS

2.01 GENERAL

A. See Drawings for dimensional constraints associated with equipment specified in this section.

2.02 FUSIBLE SWITCHES

A. Fusible switches shall be heavy-duty safety switches with the voltage ratings, current ratings, minimum interrupt rating and number of poles as indicated by the Drawings. The switches shall be horsepower rated. Auxiliary contacts shall be provided as indicated on the Drawings. Stationary contacts shall be equipped with arc chutes. Unless otherwise indicated, fuse clips shall accept only Class J current limiting cartridge fuses. Where indicated on the Drawings, units shall have service entrance labels and shall be equipped with an insulated neutral lug. Switches shall be Square D, Type HD; Cutler-Hammer DH Type; or equal.

B. Provide enclosure type as specified below in this section.

INFORMATIONAL COPY ONLY - NOT FOR BIDDING

C. Nameplates: Provide an engraved plastic nameplate for each disconnect switch identifying the equipment it protects.

D. Fuses:

1. General: Provide one complete set of fuses of each ampere rating shown on the Drawings, plus one spare set for each size shown.

2. Fuse Type: Unless otherwise indicated, units shall be Class J, dual-element current limiting, 600 V, in the ampere ratings shown. Plug fuses are unacceptable. Barrels shall be nonhygroscopic with brass-knurled ferrules.

3. Fuses shall conform to FS W-F-1726 and UL 198B, and shall carry labels showing UL class, interrupting rating, time delay characteristics, and voltage rating.

2.03 ENCLOSED CIRCUIT BREAKERS

A. Units shall be thermal-magnetic molded case circuit breakers in surface mounted nonventilated enclosures.

B. Where not shown on Drawings, provide enclosure type as specified below in this section.

C. Each unit shall have an external operating handle with a cover interlocking mechanism, which will prevent opening of the enclosure when the operating handle is in the “ON” position. The handle shall be capable of being padlocked in either the “ON” or the “OFF” position. A breaker “tripped” position shall be clearly indicated between the “ON” and the “OFF” position.

D. Where indicated on the Drawings, enclosed breakers used as service entrance equipment shall be so labeled for such service and shall contain an insulated neutral lug. The complete unit shall conform to UL 489-9.

1. When enclosed circuit breaker is used ahead of an Automatic Transfer Switch (ATS), coordinate selection of circuit breaker with the ATS supplier and the ATS short circuit withstand requirements.

E. Enclosed circuit breaker assemblies with frame sizes 100A and larger shall be 100 percent rated.

F. Provide auxiliary contacts where shown on the Drawings.

G. The circuit breakers shall be of the voltage, number of poles, minimum interrupt rating, frame size, and ampere rating shown on the Drawings.

1. Units shall be manually-operated, trip-free, molded case, front-mounted circuit breakers. Trip units shall be thermal-magnetic unless otherwise indicated on Drawings.

a. Frame sizes 100 A and larger shall have adjustable instantaneous magnetic elements.

INFORMATIONAL COPY ONLY - NOT FOR BIDDING

2. Minimum interrupting rating shall not be less than 10,000 A asymmetrical and the breaker shall conform to FS W-C-375.

3. Multiple breakers shall have a common trip single operating handle with three positions of indication.

4. Circuit breaker shall be calibrated at 40 degrees C (104 degrees F).

5. Each breaker shall be completely enclosed in a molded case with the calibrated sensing element factory sealed to prevent tampering.

2.04 DISCONNECT SWITCHES

A. Disconnect switches shall be heavy-duty safety switches with the voltage ratings, current ratings, and number of poles as indicated by the Drawings. The switches shall be 600 V type and horsepower rated. Auxiliary contacts shall be provided as indicated on the Drawings. Switches shall be Square D Type HD, Cutler-Hammer DH Type, or equal.

B. Provide enclosure type as specified below in this section.

2.05 ENCLOSURE TYPE

A. Unless otherwise specified, provide enclosures as follows per NEMA 250 and UL 50. Where conflict occurs in the selection of enclosure type assume the use of the highest cost, most protective enclosure type suitable for the given location and request guidance from the Engineer:

1. Dry Locations: Type 1.

2. Outdoor Locations: Type 4.

3. Indoor Process Areas, Non-Corrosive: Type 4.

4. Indoor, Wet Locations: Type 4.

5. Indoor, Damp Locations: Type 12.

6. Corrosive Locations: Type 4X, Stainless Steel.

7. Classified Locations: Type 7. Provide enclosure types which comply with the NEC 70, Article 500 area classification requirements specified on the Contract Plans and / or Specifications.

8. Note that hosedown locations include those locations likely to be cleaned or washed during normal operations. These locations include chemical storage and loading areas and other areas where hose bibs are installed to facilitate hosedown.

INFORMATIONAL COPY ONLY - NOT FOR BIDDING

2.06 NAMEPLATES

A. Provide laminate phenolic nameplates showing the equipment designations as specified.

B. Design: Per Section 26 05 53, “Identification for Electrical Systems.”

C. Provide an engraved plastic nameplate for each disconnect switch identifying the motorized equipment it controls

PART 3 – EXECUTION

3.01 INSTALLATION

A. Install units plumb within 1/8 inch of vertical, and in accordance with manufacturer’s instructions. Make sure that fuse ratings are as shown on the Drawings, and that breaker trip settings are per the Engineer’s instructions.

3.02 MOUNTING HEIGHTS

A. Unless otherwise shown on Drawings, enclosed switches and circuit breakers shall be centered 5 feet 0 inches above the floor.

3.03 FIELD TESTS

A. Insulation Resistance Tests: Perform insulation resistance tests on circuits to be energized with a line-to-neutral voltage of 120 V or more. Make these tests after all equipment has been connected, except that equipment that may be damaged by the test voltage shall not be connected. Test the insulation with a 500 Vdc insulation resistance tester with a scale reading 100 megohms. The insulation resistance shall be 20 megohms or more. Submit results for review.

B. Continuity Tests: Perform circuit continuity tests from a low powered dc test source to operate a buzzer or bell. Tests shall be made prior to energizing the protected circuit.

C. Operating Tests: Demonstrate that the protected circuit can be manually controlled by the installed equipment.

END OF SECTION

INFORMATIONAL COPY ONLY - NOT FOR BIDDING

This Page Intentionally Left Blank

INFORMATIONAL COPY ONLY - NOT FOR BIDDING

SECTION 26 43 00
SURGE PROTECTIVE DEVICES

PART 1 – GENERAL

1.01 SECTION INCLUDES

A. Surge Protective Devices (SPD).

1.02 RELATED SECTIONS

A. The work of the following sections is related to the work of this section. Other sections, not referenced below, may also be related to the proper performance of this work. It is the Contractor's responsibility to perform all the work required by the Contract Documents.

1. Section 26 05 11, "General Requirements for Electrical Installation."

2. Section 26 05 53, "Identification for Electrical Systems."

1.03 REFERENCE STANDARDS

A.	ANSI/IEEE C62.11	Standard for Metal-Oxide Surge Arresters for AC Power Circuits.
B.	ANSI/IEEE C62.41	Recommended Practice for Surge Voltages in Low-Voltage AC Power Circuits.
C.	ANSI/IEEE C62.45	Guide on Surge Testing for Equipment Connected to Low-Voltage AC Power Circuits.
D.	NEC Article 280	Surge Arresters.
E.	NFPA 20	Standard for the Installation of Stationary Pumps for Fire Protection.
F.	NFPA 70	NEC.
G.	NFPA 75	Standard for Protection of Electronic Computer Data Procedure.
H.	NFPA 78	Lightning Protection Code.
I.	UL 1283	Electromagnetic Interference Filters.
J.	UL 1449	Transient Voltage Surge Suppressors.

INFORMATIONAL COPY ONLY - NOT FOR BIDDING

1.04 SUBMITTALS

A. As specified in Section 26 05 11, “General Requirements for Electrical Installation.”

B. Complete drawings and documentation shall be provided by the motor controller manufacturer and shall include:

1. Catalog cut sheets

2. Dimension and outline drawings.

3. Nameplate schedule.

C. Operation and maintenance manuals.

1.05 QUALITY ASSURANCE

A. The assembly shall be UL/CSA listed.

1.06 WARRANTY

A. Provide a 1-year warranty from the Final Acceptance Date which includes material, shipping costs, labor, and travel.

PART 2 – PRODUCTS

2.01 MANUFACTURERS

A. The use of a manufacturer’s name, model, size, or catalog number is for the sole purpose of establishing the standard of quality and general configuration desired.

B. Acceptable Manufacturers:

1. Square D.

2. Eaton/Cutler Hammer.

3. General Electric.

4. Siemens.

2.02 EQUIPMENT

A. General:

1. An integrally mounted SPD system shall be included for the protection of all AC circuits from the effects of lightning induced currents, substation switching transients, and internally generated transients resulting from inductive and/or capacitive load switching.

2. Rated for use at service entrance.

INFORMATIONAL COPY ONLY - NOT FOR BIDDING

3. Modular with the following features:

   a. Suppression Element: Each to be metal oxide varistor (MOV) based and have each phase fused with fuses sized to accommodate surge current rating.

   b. Surge Current Diversion Paths:

      1) Provided between each phase conductor and neutral, between each phase conductor and ground and between the neutral conductor and ground.

      2) For Delta Configured Systems: Having components connected between each phase conductor and between each phase conductor and ground. Copper bus bars incorporated for the surge current path.

      3) Do not use plug-in connections and round wire in the surge current path.

      4) Directly connected to the bus bars of the switchgear, MCC, or panelboard to provide a low impedance surge current path.

   c. Provide UL-approved disconnect switch as a means of disconnect.

   d. Event Surge Counter:

      1) Mounted on the dead front of the panelboard.

      2) Containing battery to retain memory during power outages.

      3) Equipped with a manual reset push button.

   e. Equip with Visual and Audible Diagnostic Monitoring:

      1) Indicating Lights: To provide full-time monitoring of each phase of the surge current diversion module.

      2) Alarm: Activates upon a fault condition and has acknowledge, test, and reset push buttons.

      3) Form C Dry Contacts: One set which change state during an alarm condition to be provided.

      4) Alarm Contacts: Remain in alarm condition until the fault has cleared and the alarm has been manually reset.

4. Meets or exceeds the following criteria:

   a. Surge current rating of at least 250 kAIC per phase.

   b. Capable of surviving 5,000 ANSI/IEEE C62.41 Category C3 transients without failure or degradation of UL 1449 Suppression Voltage Rating by more than 10 percent.

INFORMATIONAL COPY ONLY - NOT FOR BIDDING

c. Designed to withstand a continuous operating voltage of not less than 115 percent of nominal RMS voltage.

d. Has a minimum EMI/RFI filtering of -50 dB at 100 kHz with an insertion ratio of 50:1 using MIL STD. 220A methodology.

e. Has a response time no greater than 1/2 nanosecond for any of the individual protection modes.

f. Recognized Component Suppression Voltage Ratings: Not to exceed the requirements of UL 1449.

g. Category C3 Let Through Voltages: Not to exceed the requirements of ANSI/IEEE C62.41.

PART 3 – EXECUTION

3.01 INSTALLATION

A. Installed per the manufacturer's specifications.

END OF SECTION

INFORMATIONAL COPY ONLY - NOT FOR BIDDING

SECTION 26 50 00

LIGHTING

PART 1 – GENERAL

1.01 SUMMARY

A. Section Includes: Providing a lighting system complete, including fixtures, lamps, standards, bases, hangers, reflectors, glassware, lenses, auxiliary equipment, ballasts, sockets, and photoelectric cells.

B. Related Sections: The work of the following sections is related to the work of this section. Other sections, not referenced below, may also be related to the proper performance of this work. It is the Contractor's responsibility to perform all the work required by the Contract Documents.

   a. Section 26 05 11, "General Requirements for Electrical Installation."

1.02 REFERENCE STANDARDS

A. 21 CFR 1040.30 – Performance Standards for Light Emitting Products.

B. UL 844 – Electric Lighting Fixtures for Use in Hazardous (Classified) Locations.

C. UL 924 – Emergency Lighting and Power Equipment.

D. UL 1570 – Lighting Fixtures, Fluorescent.

E. UL 1571 – Lighting Fixtures, Incandescent.

F. UL 1572 – Lighting Fixtures, High Intensity Discharge.

G. UL 1573 – Lighting Units, Stage and Studio.

H. UL 1574 – Lighting Systems, Track.

I. UL 8750 – Light Emitting Diode (LED) Equipment for Use in Lighting Products.

1.03 SUBMITTALS

A. As specified in Section 26 05 11, "General Requirements for Electrical Installation."

B. Catalog Cut Sheets. Submit product data for each type of fixture indicated on the Drawings (Light Fixture Schedule). Submittal data shall be in compliance with the Light Fixture Schedule and this specification section. Submit the following product data for each type of fixture:

   1. Light fixture including all appurtenances.

   2. Mounting brackets, cable, and hardware.

INFORMATIONAL COPY ONLY - NOT FOR BIDDING

3. Fasteners.

4. Seismic Restraint System: Manufacturer's certification of compliance and calculations that the equipment anchorage meets the seismic requirements specified in Section 26 05 11, Section 13 05 41, and in this section.

5. Lamps.

C. Submit photometric curves for each fixture configuration proposed. Substitutions will not be considered unless the photometric distribution curve indicates the proposed fixture is equal to or exceeds the specified luminaire.

D. Submit Shop Drawings showing proposed methods for mounting interior lighting fixtures that are not attached directly to the ceiling or wall.

1.04 QUALITY ASSURANCE

A. Source Quality Control:

1. Listed and labeled by Underwriter's Laboratories, Inc. (UL), ETL, or Canadian Standards Association.

1.05 GUARANTEE

A. Lamps that fail within 90 days after acceptance by the Owner shall be replaced at no cost to the Owner.

1.06 WARRANTY

A. Warranty Period: The warranty period shall extend 12 months after final commissioning of the permanent pump station.

PART 2 – PRODUCTS

2.01 GENERAL

A. Provide light fixtures, related equipment, and accessories in accordance with the light fixture schedules.

B. The information provided in the Light Fixture Schedule and on the Drawings does not include specification of all features necessary for a complete fixture. Provide all components necessary for a complete lighting system.

C. The use of a manufacturer's name, model, size, or catalog number is for the sole purpose of establishing the standard of quality and general configuration desired.

2.02 LIGHT FIXTURE SCHEDULE

A. Type A – Indoor LED Type:

1. Manufacturer: Lithonia Type SB LED Square-Basket Wraparound or approved equal.

INFORMATIONAL COPY ONLY - NOT FOR BIDDING

2. Construction: Continuous side flanges; continuous diffuser; full depth, white enamel end plates; die-formed code gauge cold-rolled steel; nominal dimensions 48 inches long by 8-5/8 inches wide by 2-5/8 inches deep.

3. Lamps: LED style.

4. Initial Lumen Output: 4542.

5. Optics: Translucent white diffuser.

6. Voltage: 120 Vac.

7. Color Temperature: 3500K.

8. Ambient operating temperature range: -40 degrees F to 104 degrees F.

9. Mount as shown on Drawings.

B. Type B: Indoor High Bay, LED Type.

1. Manufacturer: Lithonia Type IBL or approved equal.

2. Construction: Aluminum heat sink; steel channel and end caps; white polyester powder coated reflector; nominal dimensions 45-1/8 inches long by 15-7/8 inches wide by 2-15/16 inches deep.

3. Lamps: LED style.

4. Initial Lumen Output: 9000.

5. Optics: Wide distribution with semi-diffuse lens.

6. Voltage: 120 Vac.

7. Color Temperature: 4000K.

8. Ambient operating temperature range: -40 degrees F to 130 degrees F.

9. Mount as shown on Drawings.

C. Type C: Combination Emergency and Exit Light Fixtures:

1. Manufacturer: Lithonia Type LHQM LED or approved equal.

2. General: Fixture enclosures shall consist of a corrosion-resistant thermo-plastic housing. Capable of ceiling or wall mounting. Listed for Damp Location. Tool-less access for maintenance. Dual, adjustable LED emergency lamp heads. 120 Vac input power.

INFORMATIONAL COPY ONLY NOT FOR BIDDING

3. Emergency power shall be automatically supplied to light sources from sealed nickel-cadmium batteries with a life expectancy rating of 10 years or greater. Rated for 90 minutes of emergency lighting. Units shall comply with all requirements of UL 924.

4. Electronic solid-state logic shall provide 20-millisecond switching, automatic power cutoff at 87-1/2 percent cell voltage, recharging of batteries within 12 hours, and pilot light indication of battery and charger conditions. A manual test switch shall be provided to allow checking equipment function.

5. Exit lights shall be LED style with 6-inch-high green lettering.

6. Ambient operating temperature range: -40 degrees F to 104 degrees F.

7. Mount as shown on Drawings.

D. Type D: Exterior wallpack:

1. Manufacturer: RAB Type WPLED10/PCS or approved equal.

2. Construction: Die cast aluminum housing and lens frame; aluminum heat sink; bronze polyester powder coat finish. Approved and listed for outdoor service.

3. Lamps: LED style.

4. Initial Lumen Output: 548.

5. Optics: Dark Sky compliant.

6. Voltage: 120 Vac.

7. Color Temperature: 5000K.

8. Ambient operating temperature range: -40 degrees F to 104 degrees F.

9. Mount as shown on Drawings.

E. Type E: Exterior wallpack:

1. Manufacturer: RAB Type WPLED26/PC or approved equal.

2. Construction: Die cast aluminum housing and lens frame; aluminum heat sink; bronze polyester powder coat finish. Approved and listed for outdoor service.

3. Lamps: LED style.

4. Initial Lumen Output: 2662.

5. Optics: Dark Sky compliant.

6. Voltage: 120 Vac.

INFORMATIONAL COPY ONLY- NOT FOR BIDDING

7. Color Temperature: 5000K.

8. Ambient operating temperature range: -40 degrees F to 104 degrees F.

9. Mount as shown on Drawings.

F. Type F: Emergency Light Fixtures:

1. Manufacturer: Lithonia Type ELM2 LED or approved equal.

2. General: Fixture enclosures shall consist of a corrosion-resistant thermo-plastic housing. Capable of ceiling or wall mounting. Listed for Damp Location. Tool-less access for maintenance. Dual, adjustable LED emergency lamp heads. 120 Vac input power.

3. Emergency power shall be automatically supplied to light sources from sealed nickel-cadmium batteries with a life expectancy rating of 10 years or greater. Rated for 90 minutes of emergency lighting. Units shall comply with all requirements of UL 924.

4. Electronic solid-state logic shall provide 20-millisecond switching, automatic power cutoff at 87-1/2 percent cell voltage, recharging of batteries within 12 hours, and pilot light indication of battery and charger conditions. A manual test switch shall be provided to allow checking equipment function.

5. Ambient operating temperature range: -40 degrees F to 104 degrees F.

6. Mount as shown on Drawings.

2.03 FIXTURES

A. Fixtures shall be of the types, wattages, and voltages shown on the Drawings, comply with UL 1570, UL 1571, UL 1572, UL 1573, and UL 1574 as applicable, and be UL classified and labeled for intended use. Fixtures for use in hazardous locations shall be listed per UL Standard 844.

B. Luminaire wire, and the current carrying capacity thereof, shall be in accordance with the NEC.

C. Luminaires and lighting equipment shall be delivered to the project site complete, with suspension accessories, aircraft cable, stems, canopies, hickeys, castings, sockets, holders, ballasts, diffusers, louvers, frames, recessing boxes and related items, including supports and braces.

INFORMATIONAL COPY ONLY - NOT FOR BIDDING

PART 3 – EXECUTION

3.01 INSTALLATION

A. General:

1. All fixtures and luminaires shall be clean and operable at the time of acceptance. Lamps of all fixtures used during construction shall be replaced with new lamps at the time acceptance.

2. Install luminaires in accordance with manufacturer's instructions, complete with lamps, ready for operation as indicated.

3. Align, mount, and level the luminaires uniformly.

4. Avoid interference with and provide clearance for equipment. Where an indicated position conflicts with equipment locations, change the location of the luminaire by the minimum distance necessary.

5. Where the Drawings indicate that four-lamp light fixtures are to be "two-level" switched, wire the two inner lamps to one ballast, and the two outer lamps to the other ballast.

B. Mounting and Supports:

1. Mounting heights shall be as shown on the Drawings. Unless otherwise shown, mounting height shall be measured to the centerline of the outlet box for a wall-mounted fixture and to the bottom of the fixture for all other types.

2. For suspended luminaires, the mounting heights shall provide clearances between the bottoms of the luminaires and the finished floors as indicated.

3. Luminaire supports shall be anchored to the structural slab or structural members as indicated. Supports shall maintain the luminaire positions after relamping and cleaning.

4. Surface-mounted fixtures shall be rigidly bracketed from mounting surfaces. Luminaires installed in rows shall have a noncumulative dimensional alignment tolerance of 1/16 inch.

5. Pendant luminaires shall be provided with hanger chain to assure a plumb installation and shall have a minimum 25-degree clear swing from horizontal in all directions.

C. Mount fixtures level and securely support from the ceiling. Provide earthquake clips for fixtures mounted in suspended ceilings.

D. Pendant Fixture Mounting:

1. In office areas with level ceilings, provide stems and canopies to match fixtures.

2. In office areas with sloping ceilings, provide flexible fixture mounting canopies and stems to match fixtures.

3. In other areas, provide flexible fixture hangers, Crouse-Hinds Type ARB, Appleton Type GS, or equal.

INFORMATIONAL COPY ONLY - NOT FOR BIDDING

E. Battery Operated Emergency Lighting Fixtures:

1. Wall mounted at designated height per manufacturer's instructions if not shown on Drawings.

2. Battery disconnect switch to be left in the "OFF" position until building power is fully operational.

END OF SECTION

INFORMATIONAL COPY ONLY - NOT FOR BIDDING

This Page Intentionally Left Blank

INFORMATIONAL COPY ONLY - NOT FOR BIDDING

Division 31

Earthwork

INFORMATIONAL COPY ONLY- NOT FOR BIDDING

SECTION 31 23 23.33
CONTROLLED DENSITY FILL

PART 1 – GENERAL

1.01 GENERAL

A. Controlled Density Fill (CDF) is approved only at locations shown on the Drawings or as directed by the Engineer.

1.02 SUBMITTALS

A. Submit mix design of cement, fly ash, aggregates, and admixtures.

PART 2 – PRODUCTS

2.01 GENERAL

A. Gravel or rock, reasonably even graded from coarse to fine, in accordance with the Oregon State Highway Commission Standard Specification for Highway Construction for Aggregate and Aggregate Base.

2.02 CONTROLLED DENSITY FILL

A. CDF shall be a mixture of Portland cement, fly ash, aggregates, water and admixtures proportioned to provide a non-segregating, self-consolidating, free-flowing and excavatable material that will result in a hardened, dense, non-settling fill.

B. The CDF shall attain a compressive strength of 100 psi.

C. Materials used in CDF mixture shall conform to Tillamook County requirements and the following:

Portland Cement	ASTM C-150 or AASHTO M-85 or ODOT 02010.10
Fly Ash ASTM C-618	Class F or Class C or ODOT 02010.10
Aggregates	ASTM C-33 or ODOT 02690
Water	ODOT 02020
Admixtures	ODOT 02040 or AASHTO M-194 or ASTM C-494 or ASTM C-260

INFORMATIONAL COPY ONLY - NOT FOR BIDDING

PART 3 – EXECUTION

3.01 GENERAL

A. All portland cement concrete shall be mixed, handled, placed, compacted, and cured in conformance with OSHD Specifications for mixing, handling, placing, and curing of Structural Concrete.

B. No CDF shall be placed under water.

3.02 PLACEMENT

A. CDF shall be placed in lifts to prevent flotation or shifting of trench walls, pipe, and manholes. The first lift shall be allowed to sufficiently consolidate to provide adequate anchorage for trench walls and pipe before any subsequent lifts are placed. Other methods of insuring proper placement of pipe such as blocking and pinning may be permitted by the Engineer.

B. CDF shall not be placed on frozen ground or during a time when the air temperature is 38 degrees F or less and falling.

3.03 CURING

A. Provide steel plates to span trenches or otherwise prevent traffic or construction equipment coming in contact with CDF until the CDF has hardened sufficiently to prevent rutting.

END OF SECTION

INFORMATIONAL COPY ONLY - NOT FOR BIDDING

Division 40

Process Integration

INFORMATIONAL COPY ONLY- NOT FOR BIDDING

SECTION 40 41 13
PROCESS PIPING HEAT TRACING

PART 1 – GENERAL

1.01 SUMMARY

A. This section specifies electric heat trace tape and control for protection of piping against freezing.

B. Approved for use in Class I Div 2 Groups B, C and D and UL listed.

1.02 QUALITY ASSURANCE

A. Referenced Standards: This section incorporates by reference the latest revision of the following documents. These references are a part of this section as specified and modified. In case of conflict between the requirements of this section and those of a listed document, the requirements of this section shall prevail.

Reference	Title
NEMA ICS 1-88	Industrial Control and Systems

1.03 SUBMITTALS

A. Procedures: Section 01 33 00.

B. Manufacturer's product literature.

C. Certification that tracer tape can withstand temperature specified in Section 42 42 13.

D. Length of tracer tape, type, insulation thickness, and number of circuits required.

E. Data demonstrating coordination with pipe insulation in Section 42 42 13.

F. Thermostat panel drawing including limit cut-out.

G. Wiring diagram including identification of circuit elements installed in classified space.

H. Detailed calculations and supporting equations for sizing, including tables and figures.

1.04 EQUIPMENT SUPPLIER

A. Subject to the requirements of the Contract Documents, the following Equipment Suppliers are acceptable:

1. Pentair, Raychem XL-Trace.

2. Or Approved Equal.

INFORMATIONAL COPY ONLY NOT FOR BIDDING

PART 2 – PRODUCTS

2.01 FABRICATION

A. General:

1. Cables installed on plastic pipe shall be covered with aluminum heat transfer tape and shall not exceed plastic pipe manufacturer's watt per foot.

2. Tracer tape shall consist of self-limiting, parallel circuit construction with a continuous inner core of self-regulating conductive material between two copper bus wires.

3. Wires shall be wrapped in modified polyolefin inner jacket, tinned-copper braid, and a modified polyolefine or flouropolymer outer jacket.

4. The resistance and heating capacity of the heating material shall vary in response to piping temperature changes.

5. Tape shall withstand continuous exposure to 150 degree F temperature.

6. Tracer tape shall operate using 220 Vac, 1 phase, 60 Hz power (5 watts/feet).

   a. Each line shall be installed on its own, 20 amp breaker.

7. Tracer tape shall have a thermal rating of the required watt/foot as recommended by the manufacturer.

2.02 CONTROLS

A. General:

1. Each length of tracer tape shall be controlled by an ambient sensing thermostat with variable set point used for freeze protection.

2. Each length of tracer tape shall have an ON/OFF light indicator on the panel to verify if the respective line is energized. Light shall be labeled to indicate the respective line.

3. Thermostat shall be provided in a NEMA 4X, watertight enclosure.

4. Each length of tracer tape shall be provided with a signal light wired to the terminating end. Light shall indicate that tape is energized.

5. Where ground fault protection is required for heat trace circuits, install the associated ground fault protection device in thermostat panel.

B. Thermostat shall control by sensing ambient temperature with the following characteristics:

1. Rating: 22 A at 220 Vac.

2. Control Temperature Range: as determined by manufacturer and as specified herein.

INFORMATIONAL COPY ONLY - NOT FOR BIDDING

3. Calibration Tolerance: 2 degrees F.

4. Sensor Material: Stainless steel.

5. Limit cut-out switch.

6. Wiring: direct to thermostat.

PART 3 – EXECUTION

3.01 INSTALLATION

A. Power shall be provided from the control room in VTT Container No. 2.

B. Fasten tracer tape to pipe and valves as recommended by the manufacturer at intervals not exceeding 1 foot.

C. Provide insulation over tracer tape, in thickness and type suitable for the specified conditions, as recommended by the heat tracer tape manufacturer.

D. Install ground fault equipment where required.

END OF SECTION

INFORMATIONAL COPY ONLY - NOT FOR BIDDING

This Page Intentionally Left Blank

INFORMATIONAL COPY ONLY - NOT FOR BIDDING

SECTION 40 95 73

PROCESS CONTROL WIRING

PART 1 – GENERAL

1.01 SECTION INCLUDES

A. This section specifies conductors and cables for signal and control circuits.

1.02 RELATED SECTIONS

A. The work of the following sections is related to the work of this section. Other sections, not referenced below, may also be related to the proper performance of this work. It is the Contractor's responsibility to perform all the work required by the Contract Documents.

1. Section 26 05 53, "Identification for Electrical Systems."

1.03 REFERENCE STANDARDS

A. This section incorporates by reference the latest revision of the following documents. These references are a part of this section as specified and modified. In case of conflict between the requirements of this section and those of the listed documents, the requirements of this section shall prevail.

1. IEEE 383: Specifications for Shielded Instrumentation Cable.

2. UL 1277: Electric Power and Control Tray Cables.

3. ANSI/ICEA S-84-608-2011: ICEA Standard for Telecommunications Cable Filled, Polyolefln Insulated, Copper Conductor Technical Requirements.

4. RDUP 7 CFR 1755.890 (PE-89): Rural Development Utility Program (RDUP) 7 CFR 1755.890 (PE-89).

1.04 SUBMITTALS

A. Procedures: As specified in Section 26 05 11, "General Requirements for Electrical Installation."

B. Submit catalog cut sheets.

C. Submit insulation test results.

D. Submit telephone cable test results. Testing performed before installation of the spliced section of telephone cable shall be submitted and receive a favorable review prior to the installation of the new telephone cable.

INFORMATIONAL COPY ONLY - NOT FOR BIDDING

1.05 QUALITY ASSURANCE

A. Source Quality Control: Products shall be listed and labeled by an approved Nationally Recognized Testing Lab (NRTL) such as Underwriter's Laboratories, Inc. (UL), ETL, or Canadian Standards Association.

PART 2 – PRODUCTS

2.01 CONDUCTORS

A. General: All conductors shall be annealed copper wire or cable; and if not specifically shown on the Drawings or specified, but required, shall be the type and size required for the application and in conformance with the applicable code. All insulated conductors shall be identified with printing colored to contrast with the insulation color.

2.02 SIGNAL CABLE

A. Twisted Shielded Pairs (TSP):

1. Cable shall be single twisted, shielded pair, cable tray rated (Type TC), 16AWG, instrumentation cable, UL listed.

2. Voltage: 600 V.

3. Conductor: Bare annealed copper, stranded in accordance with ASTM B-8.

4. Conductor Insulation: 15-mil, 90 degree C, polyvinylchloride (PVC).

5. Jacket: 45-mil PVC.

6. Standards: UL 1277, IEEE383, UL listed as Type TC.

7. Approved for Use: Indoors or outdoors; wet or dry locations; in cable trays; in raceways; for direct burial; and in Class I, Division 2 location (NEC Article 501).

8. Suggested Manufacturers: Okonite, Okoseal-N Type P-OS, Type TC Instrumentation Cable; General Cable; Southwire; or equal.

2.03 NETWORK CABLE

A. Ethernet Cable – CAT 5e:

1. Cable shall exceed Category 5e component transmission requirements specified in ANSI/TIA/EIA-568-B and shall be tested to 100 MHz.

2. UL Listed, Type PLTC (Tray Cable) 600 V, 80C cable.

3. Cable shall exceed IEEE 802.3 DTE Power specification to the rated current limits with no degradation of performance or materials.

INFORMATIONAL COPY ONLY - NOT FOR BIDDING

4. Cable shall be error free Gigabit Ethernet performance to IEEE 802.3.

5. Cable shall exceed the requirements of TIA/TSB-155: 1 Gb/s Ethernet Operation over 55 Meters Channel Length.

6. Cable shall meet or exceed the 4-connector channel performance requirements of Category 5e, per the ANSI/TIA/EIA-568-C.2 standard.

7. Product: The cable shall be designed and intended for installation in an industrial environment. Construction shall include four twisted pairs of 22 AWG insulated stranded tinned copper conductors with an overall foil and braid shield.

8. Overall Cable Insulation Voltage Rating: 600 V.

9. Connector: 50-micron gold plated RJ-45.

10. Warranty: minimum 1 year.

2.04 TERMINATION OF CONDUCTORS

A. Low-Voltage Terminations:

1. Crimp-type terminals shall be UL listed, self-insulating sleeve type, with rectangular-type tongue, suitable for the size and material of the wire to be terminated and for use with stranded conductors.

2. Crimp with manufacturer-recommended type tool with calibrated dyes. Hand-crimping tools are acceptable if approved by original equipment manufacturer (OEM).

2.05 TELEPHONE CABLE

A. General: 12 pair, 24 AWG solid copper, filled core, double shielded, jacketed telephone cable approved for direct burial.

B. Submittal requirements:

1. Catalog cut sheets.

2. Where new telephone cable is to be spliced to existing telephone cable: The Contractor shall submit specifications for the existing telephone cable including cable manufacturer and manufacturer's cable code, cable type, number of twisted pairs, conductor gage, conductor material, and conductor shielding. This information shall be submitted for favorable review by the Engineer prior to procurement of the new telephone cable.

C. Manufacturer/Model: Superior Essex CASPIC-FSF or approved equal.

D. Conductors: 24 AWG, solid annealed copper with dual insulation consisting of an inner layer of foamed, natural polyolefin over which is applied a solid (skin) layer of polyolefin colored in accordance with industry standards.

E. Twisted Pairs: Individual insulated conductors shall be twisted into pairs with varying lay lengths; specific industry standard color combinations shall provide pair identification. Pairs shall be assembled into a cylindrical core.

INFORMATIONAL COPY ONLY - NOT FOR BIDDING

F. Filling compound: 80C ETPR compound, completely filling the interstices between the pairs and under the core wrap.

G. Core wrap: non-hygroscopic, dielectric tape applied over the core.

H. Inner Shield: Corrugated, copolymer coated, 8-mil aluminum tape applied directly over the core wrap; does not butt or overlap at any point along the length of the cable. Flooded shield interface.

I. Outer Shield: Rodent resistant, corrugated, copolymer coated, 6-mil steel tape applied directly over the aluminum and overlaps. Flooded shield interface.

J. Jacket: Black polyethylene.

K. Jacket Marking: Identifying information includes a telephone handset, cable code, pair count, AWG, date of manufacture, and sequential length markings at 2-foot intervals.

L. Environment: The cable shall be approved for direct burial and exposure to direct sunlight. The cable shall be identified as being rodent resistant.

M. Standards Compliance:

1. ANSI/ICEA S-84-608-2010.

2. RDUP 7 CFR 1755.890 (PE-89).

3. RoHS compliant.

2.06 DIRECT BURIAL INLINE TELEPHONE CABLE SPLICES

A. General:

1. Direct burial, inline splice for use with filled core, double shielded, jacketed telephone cable approved for direct burial.

2. The splicing method shall be designed for direct burial and shall be a gel-filled, re-enterable type.

3. The splicing components shall be provided in a kit supplied from a single manufacturer.

B. Manufacture: 3M or approved equal.

C. Individual conductors shall be spliced using a sealant-filled, moisture resistant 3M Scotchlok UY butt connector or approved equal.

D. The splice kit shall include a strain relief bar or other suitable mechanism that protects the splice from cable tension.

E. The splice kit shall include shield jumpers that provide cable shield electrical continuity across the splice.

F. The splice kit shall provide a non-metallic closure housing which completely surrounds the cable splice including locations where the cable's outer jacket has been cut or removed.

INFORMATIONAL COPY ONLY - NOT FOR BIDDING

The housing shall be filled with a re-enterable type of sealant gel. Separate cable openings shall be provided in the housing for each cable and these openings shall be designed to accept the specific cable diameter.

G. The splice kit shall include a spacing mechanism which ensures that the individual splice connectors are positioned away from the closure housing to ensure that the sealant gel fully envelops the complete conductor bundle.

PART 3 – EXECUTION

3.01 CONDUCTOR INSTALLATION

A. Exercise care in pulling wires and cables into conduit or wireways so as to avoid kinking, putting undue stress on the cables, or otherwise abrading them. No grease will be permitted in pulling cables. Only soapstone, talc, or UL-listed pulling compound will be permitted. The raceway construction shall be complete and protected from the weather before cable is pulled into it. Swab conduits before installing cables, and exercise care in pulling to avoid damage to conductors.

B. Manufacturer's cable-pulling tension shall not be exceeded.

C. Cable-bending radius shall be per applicable code and manufacturer's requirements.

D. Adequate care shall be exercised by the installers to prevent cable damage or sheath distortion. Bending radius follow manufacturer's requirements and shall not be less than ten times overall diameter of the cable.

E. Wrap all cables in manholes with fireproofing tape. Extend tape 1 inch into ducts.

F. No splices unless indicated on Drawings.

G. Provide an equipment-grounding conductor, whether or not it is shown on the Drawings, in all flexible conduit and all raceways.

H. For cables crossing hinges, utilize extra-flexible stranded wire, make up into groups not exceeding 12, and arrange so that the cables will be protected from chafing and excess flexing when the hinged member is moved.

I. Cables shall be installed and terminated by personnel who have had a minimum of 3 years of experience in terminating and splicing instrumentation and control cables including experience with twisted shielded conductors, coaxial cables, and thermocouple extension cables.

J. Cables shall be continuous from initiation to termination without splices except where specifically indicated.

K. Where installed in control consoles containing power circuits, cables shall be routed a minimum of 2 inches apart from power circuits. Color coding shall be strictly observed throughout the installation.

L. In wireways, ty-wrap/secure wire and cables at a minimum of every 4 feet.

INFORMATIONAL COPY ONLY - NOT FOR BIDDING

M. Conductor Splices and Terminations:

1. Splices:

   a. Install all conductors without splices, unless necessary for installation as determined by the Engineer. Splices, when permitted, and terminations shall be in accordance with the splice or termination kit manufacturer's instructions. Splice cables as follows:

      1) Watertight Splices: Splices in concrete pull boxes, for any type of cable or wire, shall be watertight. Make splices in low-voltage cables using epoxy-resin splicing kits rated for application up to 600 V.

      2) Shield shall be handled as a separate conductor. Use manufacturer's compression sleeve and insulated pigtail. Keep pigtail as short as possible. Terminate pigtail with marker sleeve and tug.

   b. No splicing is acceptable for coaxial cables.

   c. Telephone cable splices shall be performed by a technician who has received manufacturer's installation training for the telephone splice kit used for this project and who has performed a minimum of 10 previous splices using similar splice kits.

N. Signal Cable:

1. Cable shielding shall be grounded at one end only of the cable. Bonding shall be to a single ground point only. Bonding from cable-to-cable in multiple-run installations shall not be permitted.

2. Heat-shrinkable sleeving shall be installed on all cables to insulate shielding at the ungrounded cable terminations.

3. Terminations:

   a. Crimp-type terminals shall be UL listed, self-insulating, sleeve type with rectangular tongue, suitable for size and material of the wire to be terminated and for use with stranded wire. Spade-type lugs are acceptable with telephone-cable systems only.

   b. Crimp with manufacturer's recommended ratchet-type tool with calibrated dyes. Hand-crimping tools are not acceptable.

   c. Coaxial cable and connectors shall be terminated in accordance with the manufacturer's instructions. Use manufacturer's recommended solder. The Contractor shall prevent misapplication of solder and termination.

O. Conductor numbering shall be coordinated with the numbering scheme developed for the Pre-Fabricated Intermodal Containers, Section 13 34 20.

INFORMATIONAL COPY ONLY - NOT FOR BIDDING

3.02 TESTING

A. Signal Cable Insulation Test:

1. Disconnect the conductor under test from all equipment.

2. Use a 500 V megger to test the insulation of:

   a. Each conductor to ground.

   b. Each conductor to all other conductors in same cable.

   c. Each conductor to the shield.

   d. Each shield to ground.

3. The minimum acceptable insulation resistance is 25 mega-ohms.

4. Record each insulation measurement. Include test date and the name of the person performing the test on the test data form.

B. Telephone Cable Test:

1. Testing shall be performed by an accredited telephone cable testing organization.

2. Testing shall be performed before and after installation of the spliced section of telephone cable.

   a. Prior to installation of the new telephone cable and associated splices, cable testing shall be performed on that portion of the existing telephone cable which will contain the new telephone cable and associated splices. The purpose of this testing is to measure the condition of the existing telephone cable. Testing shall be performed at the nearest accessible cable locations (e.g., patch panel or pedestal) between which the new cable will be installed.

   b. Cable testing shall be repeated immediately following installation of the new telephone cable. The purpose of this testing is to verify proper installation of the new telephone cable and associated splices.

3. Testing shall be performed according to the requirements of RUS Bulletin 1753F-201 (PC-4) and shall include the following tests:

   a. Shield/armor continuity per 1753F-201 (PC-4), paragraph 3.1.

   b. Conductor continuity per 1753F-201 (PC-4), paragraph 3.2.

   c. DC insulation resistance per 1753F-201 (PC-4), paragraph 3.3.

   d. DC loop resistance and DC resistance Unbalance, per 1753F-201 (PC-4), paragraph 3.4.

INFORMATIONAL COPY ONLY - NOT FOR BIDDING

e. One-Person Open Circuit Measurement, per 1753F-201 (PC-4), paragraph 3.6.

f. Other tests necessary to verify proper cable installation.

4. Test results shall be recorded and submitted per the suggested formats and requirements of RUS Bulletin 1753F-201 (PC-4).

END OF SECTION

INFORMATIONAL COPY ONLY - NOT FOR BIDDING

Division 42

Process Heating, Cooling, and Drying Equipment

INFORMATIONAL COPY ONLY- NOT FOR BIDDING

SECTION 42 42 13

PROCESS PIPING INSULATION

PART 1 – GENERAL

1.01 SUMMARY

A. This Section specifies thermal insulation for exposed piping, related equipment, and appurtenant surfaces. Insulation in conjunction with heat tape shall prevent freezing of the process fluids.

1.02 SUBMITTALS

A. Procedures: Section 01 33 00.

B. Manufacturer's descriptive literature, including insulation and jacket thickness, heat transfer coefficient, and methods of installation.

C. Samples of each insulation material type and of typical jackets and covers for fittings, valves, and appurtenances.

D. Certification of jacket ratings for water vapor transmission and puncture and stiffness as specified.

E. A copy of this Specification Section with addenda updates, and all referenced Sections with each paragraph check marked to show specification compliance or marked to show deviations.

F. Data demonstrating coordination with heat tracing in Section 40 41 13, where applicable.

1.03 OPERATING REQUIREMENTS

A. Temperature Classes:

1. Insulation for exposed piping and equipment shall be classified for temperature ranges as specified herein.

PART 2 – PRODUCTS

2.01 GENERAL

A. The following design parameters shall be applied:

1. Process Fluid (water/air) Temperature Entering System = 40 degrees F.

2. Maximum Ambient Temperature = 115 degrees F.

3. Minimum Ambient Temperature = -24 degrees F.

INFORMATIONAL COPY ONLY - NOT FOR BIDDING

4. Pipe Length, diameter and material shall be in accordance with the Drawings.

5. Outdoors.

2.02 INSULATION

A. General:

1. Piping insulation shall be tubular type suitable for above ground and outdoors.

2. Insulation (in conjunction with the Heat Tracing if applicable) shall prevent freezing of process fluid or condensate.

3. Field installed closed cell rigid polyisocyanurate insulation that meets ASTM C585-90 and ASTM C450.

B. Physical Properties:

Property and Test Method	Value
Density, ASTM D1622, lb/ft^3	2.05
Compressive Strength, ASTM D1621, lb/in^2	
Parallel to rise	25
Perpendicular to rise – width	24
Perpendicular to rise - length	30
Compressive Modulus, ASTM D1621, lb/in^2	
Parallel to rise	650
Perpendicular to rise – width	475
Perpendicular to rise - length	600
Shear Strength, ASTM C276, lb/in^2	
Parallel and perpendicular, avg	15
Shear Modulus, ASTM C276, lb/in^2	
Parallel and perpendicular, avg	250
Tensile Strength, ASTM D1623, lb/in^2	
Parallel to rise - thickness	20
Flexural Modulus, ASTM C203, lb/in^2	
Parallel to rise	720
Flexural Strength, ASTM C203, lb/in^2	
Parallel to rise	33
k-factor for comparison and product qualification, ASTM C518, Btu-in/hr·ft^2·degrees F @ 75 degrees F	0.168

INFORMATIONAL COPY ONLY - NOT FOR BIDDING

Property and Test Method	Value
R-Value per inch for comparison and product qualification, ASTM C518, hr·ft^2·degrees F/Btu @ 75 degrees F	6.0
k-factor for thickness calculations, ASTM C518, Btu-in/hr·ft^2·degrees F, aged 180 days @ 75 degrees F	0.19
R-Value per for thickness calculations, ASTM C518, hr·ft^2 degrees F/Btu @ 75 degrees F	5.3
Service Temperature, degrees F	-297 to +300
Closed Cell Content, ASTM D6226, percent min.	90
Water Absorption, ASTM C272, 24-hr immersion, percent by volume	<0.7

C. The insulation thickness shall not be less than indicated in these specifications.

Pipe Size (inches)	Minimum Insulation Thickness (inches)
1-inch to 6-inch	1-1/2-inch

D. Equipment Supplier:

1. WinROC/SPI Polyisocyanurate (Trymer®, Polyiso, ISO).
2. Or approved alternate.

2.03 INSULATION JACKETS

A. General:

1. Aluminum Roll Jacketing (Cladding).
2. Precut, pre-rolled and lapped a minimum of 2 inches.
3. Secured at each joint with a minimum of a 1-1/2-inch wide, 0.02 aluminum or SST band and seal.

B. Properties:

1. 3105 or 3003 Aluminum Alloy.
2. 3 mil Polyfilm Moisture Barrier located on the interior jacket.
3. Smooth finish.
4. Minimum Thickness: 0.016 inches.

INFORMATIONAL COPY ONLY - NOT FOR BIDDING

C. Equipment Supplier:

1. ITW Pabco/Childers.

2. Or Approved Alternate.

2.04 INSULATION COVERS

A. End seals, gland seals and anchors shall match the jacket material and be designed and factory fabricated to prevent the ingress of moisture into the system.

PART 3 – EXECUTION

3.01 INSTALLATION

A. General: Apply insulation over clean, dry surfaces.

B. Protection: Protect insulation and jackets from crushing, denting, and similar damage during construction. Vapor barriers shall not be penetrated or otherwise damaged. Remove any insulation, jacket, and vapor barriers damaged during construction and install new material.

END OF SECTION

INFORMATIONAL COPY ONLY - NOT FOR BIDDING

Division 43

Process Gas and Liquid Handling, Purification, and Storage Equipment

INFORMATIONAL COPY ONLY - NOT FOR BIDDING

SECTION 43 25 50

POSITIVE DISPLACEMENT SUBMERSIBLE LIQUID PUMPS

PART 1 – GENERAL

1.01 GENERAL DESCRIPTION

A. The manufacturer shall furnish a complete pneumatically operated positive displacement submersible well pump system for installation into a 4-inch Schedule 80 well casing. All equipment shall be compatible for the corrosive landfill environment.

1.02 SUBMITTALS

A. After receipt of notice to proceed, the manufacturer shall furnish submittals as described in Section 01 33 00, "Submittal Procedures." Submittals shall include shop drawings detailing the equipment to be furnished including dimensional data and materials of construction. The Engineer shall promptly review this data, and return two copies as accepted, or with requested modifications. Upon receipt of accepted shop drawings, the manufacturer shall proceed immediately with fabrication of the equipment. The submittal shall include detailed assembly drawings for Contractor installation.

1.03 MANUFACTURER

A. The design basis for the proposed pneumatically operated positive displacement submersible well pump system is based on QED, Model LDAP4B.

1. To be considered an approved equal, complete details, including system layout and shop drawings, must be submitted to the Engineer no later than ten (10) days prior to the bid date. Sufficient data must be submitted so that the Engineer has the required information available to determine that the alternate system meets the required specifications. The Contractor shall prepare his bid on the basis of the specific equipment and materials specified for purpose of determining the low bid.

2. After the execution of the contract, substitution of non-specified equipment will be considered, if the substitution is, in the opinion of the Engineer, equal in quality to that named. If such substitution is approved by the Engineer, all savings affected by the Contractor in the purchase of the substituted equipment shall be passed on to the Owner by reducing the contract price. In submitting for substitution, the Contractor shall provide certified copies of equipment proposals from the named manufacturer.

1.04 OPERATING CONDITIONS

A. Landfill pumping application.

B. Four-inch Schedule 80 PVC well.

INFORMATIONAL COPY ONLY - NOT FOR BIDDING

1.05 WARRANTY

A. The manufacturer shall provide a part(s) and labor warranty on the complete system and accessories, including, but not limited to, the panel for a period of 24 months after notice of Owner's acceptance, but no greater than 27 months after receipt of shipment. Any manufacturing defects found during the warranty period will be reported to the manufacturer by the Owner and will be corrected by the manufacturer at no cost to the Owner.

PART 2 – PRODUCTS

2.01 GENERAL REQUIREMENTS

A. The submersible pump shall be a pneumatically actuated, positive displacement pump package including vacuum seal well cap, pump, hose, tubing, harnesses, and equipment brackets for complete Contractor installation.

B. Vacuum well application with pump exhaust in the well.

C. Well cap shall accommodate pressure transducers to monitor air pressure and water level in well.

2.02 EQUIPMENT

A. Submersible pump (P-401, P-402 and P-403) with SST support harness.

1. Three-inch extended SST fluid intake screen.
2. Pump Body: Fiberglass.
3. Pump Ends: SST.
4. Internal Components: SST.
5. Tube and Hose Fittings: SST.
6. Fitting Types: Quick Connects.
7. Tubing Material: Nylon.
8. Liquid Discharge: 3/4 inch ID.
9. Pump Air Supply: 3/8 inch ID.
10. Air Exhaust: 1/2 inch ID.
11. Hose Material: Nitrile.

B. Easy-fittings kit for tube.

INFORMATIONAL COPY ONLY - NOT FOR BIDDING

C. SST flow throttle kit.

D. Cap\mounted, single\stage filter/regulator with:

1. 5-micron filter with auto drain tap.

2. Pressure regulator with gauge.

E. Pump cycle counter.

F. Pump Support System:

1. Well cap (vacuum slip cap).

2. Polypropylene support rope with quick-link assembly or SST wire rope.

G. Well Cap:

1. 4 inch slip cap with quick-connects fittings.

2. Provide an adequate number of ports to accommodate system components.

H. Pressure Transducers:

1. Conform to the National Electrical Code (NEC) Class 1, Division 1, Group D requirements for hazardous locations.

2. Submersible, compatible with corrosive environment typical of landfill leachate.

3. Each transducer shall send a 4-20 mA signal to the master control panel within the VTT Container No. 2.

4. Provide 50 feet of cable to connect to junction box located at grade, outside of well.

PART 3 – EXECUTION

3.01 SHIPPING, STORAGE, AND HANDLING

A. All parts shall be properly protected so that no damage or deterioration will occur in transit or during prolonged storage at the site.

B. All openings in equipment shall be protected against entry of foreign objects.

C. Each box, crate, or package shall be properly marked to show its contents and the net weight.

3.02 INSTALLATION

A. Installation shall be in strict accordance with each manufacturer's system component/equipment instructions and recommendations.

INFORMATIONAL COPY ONLY - NOT FOR BIDDING

3.03 TESTING AND FIELD SERVICES

A. The supplier shall provide the services of a factory-trained service technician for a minimum of two (2) days to start up and adjust the system.

B. The pump system shall be operated in conjunction with the treatment equipment to ensure proper functionality.

C. Manufacturer shall coordinate with the Contractor to provide the Owner with a written certification of proper installation from the manufacturer.

END OF SECTION

INFORMATIONAL COPY ONLY - NOT FOR BIDDING

SECTION 43 31 10

LIQUID TREATMENT TRAIN

PART 1 – GENERAL

1.01 REQUIREMENTS

A. This section specifies design, manufacture, supply and installation of equipment necessary to treat liquid pumped from the multi-phase extraction (MPE) wells.

1. The liquid treatment train (LTT) shall be a complete packaged system capable of removing non-aqueous phase liquid (NAPL) and volatile organic compounds (VOCs).

2. NAPL shall be separated from the water and removed in a gravity oil-water separator (OWS).

3. VOCs shall be stripped and removed from the water by air sparging.

4. Iron and manganese will be oxidized by air sparging forming an insoluble precipitate.

5. The effluent from the air sparging unit containing suspended precipitate shall be pumped to a lined evaporation pond.

6. The packaged LTT system shall be contained in an intermodal container (container), in accordance with Section 13 34 20, "Pre-Fabricated Intermodal Containers," complete with OWS, air sparge tank, effluent pump, instruments, controls, and other accessories described herein and shown on the Drawings.

7. The LTT shall be furnished as a complete factory assembled package requiring field piping connections, and required electrical connections.

8. The entire packaged LTT shall be certified and labeled by Underwriters Laboratory (UL), under the appropriate packaged equipment systems category.

9. All equipment and apparatuses in the process room shall conform to the NEC Class 1 Division 2 requirements for hazardous locations

10. The LTT shall effectively treat the groundwater from the MPE system at the Ephrata Landfill.

B. The LTT equipment shall be arranged to conform to the layout shown on the Drawings.

1. All equipment shall fit through the double doors of a standard container in accordance with Section 13 34 20, "Pre-Fabricated Intermodal Containers."

2. Equipment shall be skid mounted with skids attaching to the container floor.

C. The fully functional LTT shall be the end product of one Equipment Supplier.

INFORMATIONAL COPY ONLY - NOT FOR BIDDING

D. As shown on the Drawings, the supplied LTT shall conform to and be compatible with the Contract Documents.

E. Nameplates: Major equipment items shall have the manufacturer's name, address, type or style, model or serial number, and catalog number on a plate secured to the equipment.

1. Each piece of equipment shall bare the approval designation and the markings required for that designation.

2. Valves shall bare a securely attached tag with the manufacturer's name, catalog number and valve identification permanently displayed.

F. Capacity and design of the LTT and accessories shall be suitable for 24-hour full load service at container temperatures ranging between 40 and 100 degrees F.

1.02 DESIGN REQUIREMENTS

A. The materials and equipment covered by this section are intended to be standard equipment of proven ability as manufactured by reputable manufacturers.

1. Equipment shall be designed and constructed in accordance with the best practice of the industry, and shall operate satisfactorily when installed in accordance with Equipment Supplier's recommendations and the Contract Documents.

2. The Specifications call attention to certain features, but do not purport to cover all details entering into the construction of the system.

B. OWS shall achieve 10 mg/L or less, 30 micron, non-emulsified, free and dispersed oil droplets.

C. All electrical equipment, instrumentation, and motors shall be explosion proof, Class I, Division 2, Group D.

D. Water is pumped from the wells into the OWS and shall gravity flow from the OWS into the air sparge tank.

1. Air sparge shall supply between 1 and 10 SCFM air flow to achieve a minimum volumetric air:water ratio of 7:1 at maximum liquid flow rate of 10 gpm.

E. Free floating oil skimmed from the surface of the OWS shall flow into the oil waste drum.

F. Equipment, system components, piping and accessories shall be compatible with the MPE liquids and vapors defined in Table 1 of paragraph 1.03.

1.03 SERVICE CONDITIONS

A. Location: Container; Ephrata, Washington.

B. Container Temperature Range: 40 to 100 degrees F.

C. Influent Water Design Pressure: <60 psig.

INFORMATIONAL COPY ONLY - NOT FOR BIDDING

Table 1. Influent Design Conditions and Service Conditions
Liquid Treatment Train
Ephrata Landfill MPE Pretreatment Facility

Parameter	Units	Design Service Condition
Maximum Flow Rate	gpm	10
Minimum Flow Rate	gpm	2
Maximum Influent Temperature	F	80
Minimum Influent Temperature	F	50
NAPL (Influent)[a]	mg/L	100
pH Range (Influent)	Units	5-8
TSS Load (Influent)	mg/L	100 (primarily iron)
TDS Load (Influent)	mg/L	5

[a] NAPL includes: Toluene, Xylene, Ethylbenzene, Trimethylbenzene, Propylbenzene, Tetrachloroethene, and Oil and Grease.

1.04 SUBMITTALS

A. Submittals shall be in accordance with Section 01 33 00, "Submittal Procedures."

B. Shop Drawings and Product Data:

1. After receipt of Notice to Proceed, the Contractor shall furnish complete specification and shop drawings for all LTT work shown in the Contract Documents.

   a. These drawings shall govern the work detailed.

   b. Submittal review by Engineer shall be only for general conformity with the Contract Documents.

2. Submittals shall include complete assembly drawings, together with data covering materials, drive unit, parts, devices, and accessories forming a part of the equipment furnished.

   a. Included in the submittal shall be the respective manufacturer's materials of construction, complete catalog information and descriptive literature, specifications, performance curves, and detailed dimensional information for the equipment and skid.

   b. Provide system valve submittal data including manufacturer's specifications, performance ratings, and dimensions.

   c. Equipment Supplier's electrical requirements for the packaged LTT system shall include control wiring ladder diagrams, control panel construction details, and component cut sheets.

   d. Submit cut sheets of the final skid dimensions, critical equipment dimensions, clearance requirements, connection points, and coordination items to ensure proper layout.

      1) Submit cut sheets in PDF and DWG (AutoCAD) file formats.

INFORMATIONAL COPY ONLY - NOT FOR BIDDING

3. Make, model, and weight of each equipment assembly.

4. Detailed shop drawings showing elevation and plan views with the equipment dimensions, size, location, clearances and type of connections.

    a. All shop drawings shall be drawn to scale.

    b. Submit shop drawings in PDF and DWG (AutoCAD) file formats.

5. Detailed shop drawings showing elevation and plan views of interconnecting piping, valves, and meters.

    a. All shop drawings shall be drawn to scale.

    b. Submit shop drawings in PDF and DWG (AutoCAD) file formats.

6. Power and control wiring diagrams, including terminals and numbers.

C. Quality Control Submittals:

1. Current copy of Equipment Supplier's American Society of Mechanical Engineers (ASME) Certification of Authorization and proof of successful operating experience during the last five (5) years on five (5) installations comparable to that specified herein.

2. Current copy of Equipment Supplier's, or inspecting party's, UL certification.

3. Written shipping, unloading, storage, protection, and handling instructions.

4. Equipment Supplier's printed installation instructions, including lifting and handling procedures.

5. Recommended spare parts list to maintain the equipment in service for a 5-year period.

    a. Include a list of special tools required for checking, testing, parts replacement, and maintenance with current price information.

6. List of special tools, materials, and supplies furnished with the equipment for use prior to and during start-up.

7. Description of proposed quality control program that shall be used during the manufacturing of equipment.

    a. Include resume of Quality Control Manager.

INFORMATIONAL COPY ONLY - NOT FOR BIDDING

8. Certification by the Quality Control Manager indicating quality control, testing, and inspection have been completed according to standards specified herein prior to shipment to job site.

    a. Equipment Supplier's Functional and Performance Test Reports.

    b. Quality Control Manager Certification letter.

    c. Equipment Supplier fabrication logs.

9. Certification of the condition of the delivered equipment or materials, and verification of the accuracy of the bill of lading with the actual equipment or materials delivered.

10. Equipment Supplier's Certificate of proper installation at the site.

D. Closeout Submittals:

1. Submit four (4) copies of Operation and Maintenance Manuals. At a minimum, the following information shall be included:

    a. Equipment Supplier's instructions for equipment installation, start-up, operation, preventative maintenance, servicing, and troubleshooting procedures.

    b. Manufacturer's data as outlined in the submittal portion of this Specification.

    c. Data on equipment function, normal operating characteristics, and limiting conditions.

    d. All assembly, installation, alignment, adjustment, and checking and maintenance instructions.

    e. Name, address, and telephone number of factory trained service technician.

    f. Name, address, and telephone number of parts suppliers for all equipment, supplies, and control equipment.

    g. Safety data sheets (SDS).

    h. The Operation and Maintenance Manuals shall be in addition to any instructions or parts lists packaged with or attached to the equipment items when delivered.

2. Maintain a set of as-built drawings that document all changes made.

    a. Upon completion of the work, transfer these changes to a clean set of full-size drawings with red ink to indicate additions and green ink to indicate deletions.

        1) Submit these full-size as-built drawings to the Owner.

        2) As-Built Drawings shall be provided in electronic format on Compact Disc in PDF format with borders and title blocks clearly identified.

    b. Drawing quality and size of presentation shall be legible at a 50 percent reduction of such drawings; reduced drawings shall be used for insertion into Operations and Maintenance Manuals.

INFORMATIONAL COPY ONLY - NOT FOR BIDDING

1.05 DELIVERY, STORAGE, AND HANDLING

A. Equipment and materials shall be prepared, protected for shipment and shipped as specified in appropriate ASME and American Society for Testing and Materials (ASTM) standards.

B. All equipment shall be prepared for shipment and shipped in accordance with the Equipment Supplier's recommendations and in a manner which prevents damage to the equipment.

C. All parts shall be properly protected so that no damage or deterioration shall occur in transit or during prolonged storage at the site.

D. All openings in equipment shall be protected against entry of foreign objects.

E. Each box, crate, or package shall be properly marked to show its contents and the net weight.

F. No equipment shall be shipped until all applicable submittals have been received and reviewed by the Engineer.

G. Inspection upon delivery: The Equipment Supplier shall have a representative at the site at the time of delivery of equipment and/or materials.

1. The Equipment Supplier shall inspect the equipment and/or materials.

2. The Equipment Supplier shall certify in writing to the Owner the acceptable condition of the delivered equipment or materials, and shall verify the accuracy of the bill of lading with the actual equipment or materials delivered.

3. Upon approval by the Equipment Supplier, the installing contractor shall be responsible for unloading, storing, and protecting the equipment and materials.

1.06 QUALITY CONTROL

A. The LTT specified in this section shall be manufactured under the following minimum quality control program:

1. In order to maintain the highest quality control, the equipment specified herein shall be provided as a package by a single Equipment Supplier.

2. The system shall be furnished by a single Equipment Supplier who shall furnish proof of successful operating experience during the last five (5) years on five (5) installations comparable to that specified herein.

3. The equipment shall be constructed in a fabrication shop which has an ASME "U" Stamp.

4. Welding of vessel internals shall be performed by welders qualified in accordance with the latest ASME Boiler and Pressure Filter Code, Section IX, Welding and Brazing Qualifications.

INFORMATIONAL COPY ONLY - NOT FOR BIDDING

5. Employment of Quality Control Manager with at least 5 years of experience.

6. Log of system fabrication shall be kept that includes, at a minimum:

   a. Start of fabrication and other production milestones.

   b. Production personnel who worked on the system.

   c. Quantity and type of materials used for the system construction.

   d. Settings used for the production equipment during fabrication.

   e. Visual inspection results for system components before and after final assembly.

   f. Test results for completed system as specified in Paragraph 3.01 of this section.

7. Quality Control Manager shall have current production schedule available for inspection that identifies system fabrication or storage locations, current status, and expected completion dates.

8. All areas of facility, where the system or parts thereof, are being manufactured or stored under this Specification, shall be available for inspection by Engineer and Owner during normal working hours.

9. The system shall be accompanied by a signed letter from the Quality Control Manager stating that the system was manufactured in accordance with these Specifications.

   a. This letter shall be accompanied by test data and Equipment Supplier logs.

   b. The system shall not be accepted at site without prior receipt of this documentation by the Owner.

1.07 WARRANTY

A. Furnish warranty, with Owner named as beneficiary, in writing.

1. Warranty shall provide for correction, or at option of Owner, removal and replacement of LTT found to contain defects in materials and workmanship during a period of one (1) year starting when facility is Substantially Complete.

   a. The Contractor shall be solely responsible for the warranty.

      1) Warranties by the Equipment Supplier and manufacturers of various components, in lieu of a single source responsibility by the Contractor, shall not be accepted.

2. Standard material and equipment warranties that exceed the minimum required one (1) year Contractor warranty shall be furnished to the Owner.

INFORMATIONAL COPY ONLY - NOT FOR BIDDING

B. All equipment supplied shall be warranted to the Owner as follows:

1. All work including mechanical and electrical components of equipment, and/or packaged control systems which are furnished as components of the equipment specified hereinafter, shall be guaranteed against defects in materials and workmanship.

   a. Contractor further warrants that all equipment is merchantable and is suitable for the purpose intended and shall provide the results required by the Contract Documents.

2. The Contractor shall make, at its own expense, all repairs and/or replacement necessitated by defects in materials or workmanship that become evident within the warranty period.

3. The Contractor shall make all repairs and replacements promptly upon receipt of written orders for same from the Owner.

   a. If within ten (10) days after the Owner has notified the Contractor of a defect, the Contractor has not started to make the necessary corrections, the Owner is hereby authorized to make the corrections, or to order the work to be done by a third party, and the cost of the correction shall be paid by the Contractor.

4. Repetitive malfunction of equipment shall be cause for equipment replacement and an extension of the warranty period to a date one (1) year following acceptable replacement or repair.

PART 2 – PRODUCTS

2.01 GENERAL

A. Burden is upon the equipment supplier to review intended use, sizing, function, design constraints, and design requirements and confirm equipment described herein (or equal) to provide a functional system as intended. Specifications, Process Flow Diagram, and drawings shall be used unilaterally to describe intent. Any required changes to warranty the equipment shall be made known to the Engineer.

B. All equipment showing an HOA shall have adequate contacts to monitor HOA position.

2.02 EQUIPMENT SUPPLIER

A. Equipment Supplier shall be in accordance with Section 43 31 20, “Vapor Treatment Train.”

INFORMATIONAL COPY ONLY - NOT FOR BIDDING

2.03 MANUFACTURERS

A. Subject to compliance with requirements of the Contract Documents, products of the following Manufacturers shall be incorporated in the Work of this section:

1. Container: In accordance with Section 13 34 20, "Pre-Fabricated Intermodal Containers."

2. OWS:

   a. Pan America Environmental, Inc., (847) 487-9166, www.panamenv.com

   b. Or Approved Equal.

3. OWS Pump:

   a. Ingersoll Rand PLC, (800) 495-0276, www.arozone.com

   b. Or Approved Equal.

4. Effluent Pump:

   a. MTH Pumps/MTH Tool Company, Inc., (630) 552-4115, www.mthpumps.com

   b. Or Approved Equal.

5. Carbon Vessel: In accordance with Section 43 31 20; "Vapor Treatment Train."

6. Sparge Blower: Gast Manufacturing, Inc. (269) 926-6171, www.gastmfg.com.

2.04 INTERMODAL CONTAINER

A. Container shall be in accordance with Section 13 34 20, "Pre-Fabricated Intermodal Containers."

2.05 OIL-WATER SEPARATOR SKID (SKID 1)

A. Oil-Water Separator (T-101):

1. General: This section includes requirements for the OWS.

   a. Design shall include 304 stainless steel, rectangular tankage with features as designed per American Petroleum Institute (API) Publication 421 *Design and Operation of Oil-Water Separators* and stokes law.

   b. The design shall incorporate flexible flow rating capability based on application parameters.

   c. Tank shall be rated for normal service under a 5 psig on headspace.

   d. OWS shall be rated for a minimum 10 gpm.

INFORMATIONAL COPY ONLY NOT FOR BIDDING

e. Configure the OWS in relation to the air sparge tank such that OWS treated effluent flows by gravity to the air sparge tank.

1) Configuration shall provide for OWS overflow prevention through utilization of the air sparge tank high-high level alarm LSHH-102.

2. Influent Chamber: Influent flow shall enter a clog proof influent diffuser and immediately spread out across the depth and width of the chamber.

a. Any readily settleable solids shall drop to the bottom of the V-shaped solids accumulation chamber located directly under a coalescing media pack.

3. Oil-Water Separation Chamber: The separation chamber shall be packed with cross-corrugated coalescing media.

a. The media pack shall be designed to create a quiescent zone, a laminar flow pattern to facilitate the impingement of oil on the media, and shall provide numerous impact sites and changes of flow direction.

b. Coalescing Media Pack: The OWS shall contain coalescing media, which has the following features or Approved Equal:

1) 1/2-inch or 3/4-inch plate spacing.

2) 304 stainless steel construction, 10 mil plate thickness.

3) Cross-corrugated design with plates attached to each other.

4) Corrugation angle to be 60 degrees.

4. Oil Skimmer: OWS shall contain adjustable oil skimmer for removing separated/floating oils from the separation chamber. The oil skimmer shall provide the following features:

a. Slotted rotary pipe design.

b. Adjustment collar for readjusting the skimmer by hand rotation.

c. Construction: 304 stainless steel.

d. External discharge fitting in tank wall with skimmer attachment to this fitting on inside of tank.

5. Sludge Hopper: The separator shall have a V-shaped solids accumulation chamber located under the coalescing media.

a. This chamber shall provide temporary solids storage.

b. The chamber walls shall be pitched at 45 degrees to assure simple and thorough solids removal.

INFORMATIONAL COPY ONLY - NOT FOR BIDDING

c. Dual outlet ports shall be provided for sludge removal.

d. Accumulated solids shall be transferred to the waste collection tank via the OWS pump.

6. Clean Water Effluent Weir: The cleansed water shall flow under the oil retention baffle, over the water weir and out of the tank.

7. Separator Cover: The separator shall have a single-piece 304 stainless steel cover that provides complete closure of the tank.

   a. The separator cover shall be mounted to the tank via zinc plate hardware and vapor sealed with an industrial grade closed cell, compressible polyethylene gasket.

   b. Tank cover shall be vented to the Vapor Treatment Train (VTT) as shown on Drawings through knockout tank T-105.

8. Legs: The OWS tank shall be provided with integral legs with anchor bolt holes (hardware by others).

9. Fittings: All fittings are to be FNPT coupling up to 3 inches.

   a. Fittings larger to be 150# FF ANSI B16.5 flange.

10. Manufacturer/Model:

   a. Pan America Environmental – Model OSe-4.

   b. Or Approved Equal.

B. Oil-Water Separator Pump (P-102):

1. The OWS pump shall provide the capability of transferring oil from the oil waste drum, and solids/sludge from the OWS to the waste collection tank.

   a. A single air compressor as described in Section 43 31 20, “Vapor Treatment Train” and shown on the Drawings shall provide air for the OWS pump by a solenoid valve.

   b. OWS pump shall be rated for a minimum 10 gpm.

2. Components:

   a. One-inch air operated, double diaphragm pump with aluminum body/Buna-N diaphragms and check valves.

      1) Pump shall be mounted, wired, and plumbed to the oil waste drum and bottom sump of OWS.

INFORMATIONAL COPY ONLY - NOT FOR BIDDING

b. Filter, regulator, metering valve, and electric solenoid valve shall be provided mounted to the pump base for filtering, regulation, fine meter control, and on/off of air flow to pump.

1) The assembly shall include an air hose from assembly discharge to pump air inlet.

c. The main control panel (MCP) shall include hands-off-auto (HOA) operation to control manual and automatic on/off of pump based on high/low levels in the oil waste drum.

1) Two float switches shall be provided and installed in the oil waste drum to operate the pump and a third switch to alarm at high liquid level in the drum.

a) Float switch elevations require approval from the Engineer.

3. Manufacturer/Model:

a. ARO – Model PD10A-AAP-GGG.

b. Or Approved Equal.

C. Oil Waste Drum (T-103):

1. Skimmed oil from the separator shall gravity flow to a maximum 2-foot-diameter, minimum 55-gallon capacity high density polyethylene (HDPE) collection drum.

a. The drum shall be equipped with two float switches for OWS pump operation and one float switch for high level alarm at the MCP.

b. Provide isolation valve on all sidewall fittings.

c. Accumulated oil in the drum shall be transferred to the waste collection tank via the OWS pump.

D. Flow Meter:

1. Flow Meter, Influent: A flow meter shall be shipped loose for installation in the influent plumbing prior to the treatment system.

a. The flow meter shall be an insertion type electromagnetic flow sensor with sensor mounted National Electrical Manufacturers Association (NEMA) 4 digital display.

b. Installation Tee Supplied: Brass, 1-inch National Pipe Thread Taper (NPT).

c. Power Required: 12-25 Vdc.

INFORMATIONAL COPY ONLY - NOT FOR BIDDING

2.06 PROCESS TANK SKID (SKID 2)

A. Air Sparging System:

1. Tank Treatment System:

a. The LTT shall include an air sparging tank with coarse bubble diffuser connected to compressed air capable to function on a continuous basis with the following components:

1) One (1) tank.

2) One (1) diffuser.

3) Air rotameter and manual air flow control valve and regulator as shown on Drawings.

4) NEMA 4 controls.

b. Tank (T-102):

1) Air sparge tank volume: 55-gallon capacity between effluent pump ON/OFF levels and maintain 2.0 feet of freeboard.

2) Minimum 2.5-foot water depth above diffusers.

3) High level alarm LSHH-102 at 1-foot freeboard.

4) The tank, internal baffles, interconnecting piping, external structural, and cover shall be constructed of 304 stainless steel.

a) Flanges shall be 150 pounds, flat face, ANSI B16.5.

5) Tank shall be cylindrical with conical bottom and effluent connection to effluent pump.

6) Tank shall have 304 stainless steel cover that provides complete closure of the tank:

a) The cover shall be mounted to the tank via zinc plate hardware and vapor sealed with an industrial grade closed cell, compressible polyethylene gasket.

b) Tank cover shall be vented to knockout tank T-105.

7) Drain: 2-inch with manual valve.

8) Surface Preparation: Exterior weld burn marks removed.

INFORMATIONAL COPY ONLY NOT FOR BIDDING

9) Coatings: None.

10) Tank shall be capable of a -5 psig on headspace.

11) Tank shall be equipped with 304 stainless steel stilling well and level controls and alarms as shown on the Drawings.

c. Coarse Bubble Diffuser:

1) The air sparge tank shall be equipped with a 304 stainless steel course bubble diffuser in the bottom of the tank for injection and diffusion of air at a minimum flow rate of 1 SCFM and maximum flow rate of 10 SCFM. Pressure and flow shall be regulated at the diffuser inlet to provide pressure in headspace within the tank pressure rating.

2) The tank shall be provided with exterior flange connection with isolation valve for compressed air supply to the internal diffuser.

3) A single air compressor as described in Section 43 31 20, "Vapor Treatment Train" and shown on the Drawings shall provide air for the coarse bubble diffuser by a solenoid valve.

B. Sparge Blower (P-103):

1. Regenerative Blower:

a. 1/8 HP, 60 Hz, 115V, 1P, EXP motor, TEFC.

b. Max Air Flow: 27 CFM at 28.5 inches H_2O (discharge pressure) / 26.5 inches H_2O (vacuum).

c. Oil-less operation.

d. Aluminum blower housing, impeller, and cover.

e. Internal muffling on inlet/outlet.

f. Manufacturer/Model: Gast – Model R1102 Regenerative Blower.

C. Knockout Tank (T-105):

1. 50-Gallon condensate separator tank.

2. Epoxy painted steel tank.

3. Stainless steel demister element.

4. 4-Inch tank bottom clean out port.

5. 4-Inch clean out port for stainless steel demister element replacement.

INFORMATIONAL COPY ONLY - NOT FOR BIDDING

6. Drain valve.

7. 1/2-inch drain connection to OWS T-101.

8. Clear PVC site tube.

9. Pressure relief valve.

10. Tank shall be elevated to provide for gravity drainage into OWS T-101.

D. Effluent Pump (P-101):

1. The effluent pump shall provide the capability of transferring the treated effluent from the air sparge tank to evaporation pond through the discharge line shown on the Drawings.

   a. The system can be operated via manual or automatic mode.

   b. 1/2 HP, 60 Hz, 3,450 RPM.

2. Components:

   a. Centrifugal pump plumbed with ball valves on inlet and outlet.

      1) Pump construction: 304 stainless steel volute and impeller.

      2) Pump shall be mounted, plumbed and wired to the air sparge tank.

      3) Pump performance shall be 12 gpm at 44 feet total dynamic head (TDH).

      4) Motor shall be TEFC.

   b. MCP shall include HOA operation to control manual and automatic on/off of pump based on high/low levels in tank effluent chamber.

      1) Two (2) float switches shall be provided and installed within the stilling well of the air sparge system to control pump operation and one (1) switch for high level alarm.

      2) All controls shall be integrated into the MCP.

   c. Equipment supplier to verify that $NPSH_A > NPSH_R$.

3. Manufacturer/Model:

   a. MTH Pumps – Model C51AB.

   b. Or Approved Equal.

INFORMATIONAL COPY ONLY NOT FOR BIDDING

2.07 CARBON VESSEL (VAPOR PHASE CARBON, GAC-3)

A. Carbon vessel shall be in accordance with Section 43 31 20, “Vapor Treatment Train.”

2.08 MASTER CONTROL PANEL

A. The LTT shall include controls that shall be integrated into one, centralized MCP located in the VTT container.

   1. The MCP shall be in accordance with Section 13 34 20, “Pre-Fabricated Intermodal Containers”.

2.09 WASTE COLLECTION TANK (T-104)

A. Sludge Storage Tank: A 600-gallon cone bottom polyethylene tank and coated metal stand shall be provided for storage of the oil and solids removed from the system.

   1. All tank fittings shall be PVC bulkhead type.

   2. A 4-inch quick-connect fitting at the bottom of the tank for pump out shall be provided with an isolation valve.

   3. Tank shall include an installed high level float switch and a high-high level alarm float switch set at elevations approved by the Engineer.

   4. Tank shall include cover and venting to the VTT system as shown on the Drawings.

   5. Maximum tank diameter shall be 4 feet.

PART 3 – EXECUTION

3.01 PRE-DELIVERY TESTING

A. The LTT shall at a minimum be subject to the following tests:

   1. A hydrostatic pressure test shall be performed on the assembled tanks, vessels, and associated appurtenances with openings sealed with blind flanges.

      a. Non-flanged openings shall be sealed as recommended by Equipment Supplier and approved by Owner.

      b. During test, equipment shall be oriented, loaded, and supported similar to conditions of actual service.

      c. The tests shall be performed at 50 percent in excess of the design pressure to insure the shell is free of imperfections such as cracks, pinholes, or incomplete welds.

      d. The test shall be conducted in accordance with appropriate ASTM standards.

      e. All problems shall be corrected and the unit retested before approval.

INFORMATIONAL COPY ONLY - NOT FOR BIDDING

f. At Contractor's option, pressure test may be performed in the fabrication facility or after erection in the field.

1) If performed in field, and if necessary to correct deficiencies, Contractor shall bare full expense for removal of equipment, transport to factory, correction of deficiency, transport back to field, and reinstallation, including costs associated with the erecting contractor's costs for equipment and dismantling and re-erection.

2) Contractor shall notify Owner five (5) days before any such tests are conducted to provide the opportunity for direct inspection by the Owner.

3) In lieu of direct inspection, an accurate log of the test shall be kept for submittal.

3.02 INSTALLATION

A. Installation shall be in strict accordance with each system component/equipment manufacturer's instructions and recommendations.

B. Equipment shall be placed in the locations shown on the Drawings, unless otherwise directed by the Engineer.

C. Coordination of equipment and systems to the available space, with other trades, and to the access routes through the construction shall be the Contractor's responsibility.

D. Make offsets, transitions, and changes in direction of pipes and ducts, as required to maintain proper headroom and pitch of sloping lines and avoid structural, electrical, pipe and duct interferences whether or not indicated on Drawings.

1. Furnish fittings, etc., as required to make these offsets, transitions and changes in direction.

E. Determine exact route and location of each pipe and duct and coordinate and obtain approval for changes from the layout indicated on the Drawings with the Engineer prior to fabrication.

F. Verify the physical dimensions of each item of mechanical equipment to fit the available space and promptly notify the Engineer prior to roughing-in if conflicts appear.

3.03 FIELD ERECTION SUPERVISION AND TRAINING

A. Provide continuous Equipment Supplier field erection supervision during erection and installation of LTT.

1. The Equipment Supplier's erection and installation supervisor shall have at least 3 years of experience in installation of similar LTT systems.

2. Erection and installation supervisor shall estimate the equipment requirements, and provide this estimate in writing to Engineer as part of the equipment installation instructions.

INFORMATIONAL COPY ONLY - NOT FOR BIDDING

3. Erection and installation supervisor shall hold a pre-installation conference with Owner and Engineer to fully describe the requirements of the equipment and work.

4. Upon completion of installation, Equipment Supplier shall provide Engineer written certification that the equipment installation conforms to Equipment Supplier's instructions and designs.

B. Electrical connection to the equipment and any instruments or monitoring devices shall be provided by the Electrical Contractor as specified elsewhere.

C. The Equipment Supplier shall provide a Field Representative for adjusting, testing, and certification to include at a minimum:

1. Delivery inspection and certification.

2. Installation inspection and certification of the installation.

3. Start-up and operational and performance testing.

D. Provide operator a minimum of 2 (two) days Owner training, as required to develop proficient capabilities for equipment operation and maintenance personnel.

E. Contractor shall provide a minimum of five (5) working days' notice to Owner prior to the start of installation activities.

END OF SECTION

INFORMATIONAL COPY ONLY NOT FOR BIDDING

SECTION 43 31 20

VAPOR TREATMENT TRAIN

PART 1 – GENERAL

1.01 REQUIREMENTS

A. This section specifies design, manufacture, supply and installation of equipment necessary to treat vapors from the multi-phase extraction (MPE) wells.

1. The vapor treatment train (VTT) shall be a complete package furnished complete with knock out tanks, progressive cavity pump for condensate, inline filter, clear trap, vacuum pump, air compressor, heat exchanger, vapor phase carbon, master control panel and associated instrumentation as described herein and shown on the Drawings.

2. The VTT system shall:

   a. Provide vacuum assist during initial phases of MPE well operation.

   b. Provide soil vapor extraction (SVE) following initial vacuum assisted drawdown of MPE wells.

   c. Remove moisture and control temperature of vapors prior to activated carbon treatment.

   d. Treat vapors with activated carbon to remove volatile organic compounds (VOCs).

   e. Provided compressed air for MPE wells and Liquid Treatment Train (LTT) equipment.

3. The VTT system shall be furnished in an intermodal container (container), in accordance with Section 13 34 20, “Pre-Fabricated Intermodal Containers,” as a complete factory assembled package requiring field piping connections and electrical connections.

4. The entire packaged system shall be certified and labeled by Underwriters Laboratory (UL), under the appropriate packaged equipment systems category.

5. All equipment and apparatuses in the process room shall conform to the NEC Class 1 Division 2 requirements for hazardous locations. All equipment shall be air tight and not allow leakage of process air into the room.

6. The VTT shall effectively treat the vapor from the MPE system at the Ephrata Landfill.

INFORMATIONAL COPY ONLY - NOT FOR BIDDING

B. The equipment shall be arranged to conform to the layout and within the foot print shown on the Drawings.

   1. Equipment shall be skid mounted with skids attaching to the container floor.

   2. All equipment skid assemblages shall fit through the double doors of a standard container in accordance with Section 13 34 20, “Pre-Fabricated Intermodal Containers.”

C. The fully functional VTT shall be the end product of one Equipment Supplier.

D. As shown on the Drawings, the supplied VTT system shall conform to and be compatible with the Contract Documents.

E. Nameplates: Major equipment items shall have the manufacturer’s name, address, type or style, model or serial number, and catalog number on a plate secured to the equipment.

   1. Each piece of equipment shall bare the approval designation and the markings required for that designation.

   2. Valves shall bare a securely attached tag with the manufacturer’s name, catalog number and valve identification permanently displayed.

F. Capacity and design of the VTT and accessories shall be suitable for 24-hour full load service at container temperatures ranging between 40 and 100 degrees F.

1.02 DESIGN REQUIREMENTS

A. The materials and equipment covered by this section are intended to be standard equipment of proven ability as manufactured by reputable manufacturers.

   1. Equipment shall be designed and constructed in accordance with the best practice of the industry, and shall operate satisfactorily when installed in accordance with Equipment Supplier’s recommendations and the Contract Documents.

   2. The Specifications call attention to certain features, but do not purport to cover all details entering into the construction of the system.

B. All electrical equipment, instrumentation, and motors within the process room shall be explosion proof, Class 1, Division 2, Group D.

C. Vapors shall be drawn under vacuum from extraction wells.

   1. Vapor moisture shall be removed in knockout tank and vapor temperature controlled by heat exchanger prior to carbon treatment.

D. Equipment, system components, piping and accessories shall be compatible with the MPE liquids and vapors defined in Table 1 of paragraph 1.03 in Section 43 31 10, “Liquid Treatment Train.”

E. Equipment, system components, piping and accessories shall be rated for normal service under a 30-inch Hg vacuum.

INFORMATIONAL COPY ONLY - NOT FOR BIDDING

1.03 SERVICE CONDITIONS

A. Location: Container; Ephrata, Washington.

B. Site Conditions:

1. Elevation: 1,300 feet AMSL.

2. Ambient Conditions:

a. Maximum Temperature: 105 degrees F.

b. Minimum Temperature: -5 degrees F.

c. Humidity Ratio: 73.5 (grains of moisture per pound of dry air).

d. Dew Point: 56.2 degrees F.

3. Container Temperatures Range: 4 degrees F – 100 degrees F.

C. Influent Vapor Design Pressure: Table 1:

Table 1. Influent Design Conditions and Service Conditions
Vapor Treatment Train
Ephrata Landfill MPE Pretreatment Facility

Vacuum Pump Operating Frequency	Curve Points	Parameter	Units	Design Service Condition
60 hertz	Point #1	Vapor Flow Rate	ACFM	135
		Vacuum Pressure	Inches Hg	-23.5
	Point #2	Vapor Flow Rate	ACFM	70
		Vacuum Pressure	Inches Hg	-4
30 hertz	Point #1	Vapor Flow Rate	ACFM	60
		Vacuum Pressure	Inches Hg	-20
	Point #2	Vapor Flow Rate	ACFM	15
		Vacuum Pressure	Inches Hg	-4

Note: All vacuum pressures are gauge

1.04 SUBMITTALS

A. Submittals shall be in accordance with Section 01 33 00, “Submittal Procedures.”

B. Shop Drawings and Product Data:

1. After receipt of Notice to Proceed, the Contractor shall furnish complete specification and shop drawings for all VTT work shown in the Contract Documents.

a. These drawings shall govern the work detailed.

b. Submittal review by Engineer shall be only for general conformity with the Contract Documents.

INFORMATIONAL COPY ONLY - NOT FOR BIDDING

2. Submittals shall include complete assembly drawings, together with data covering materials, drive unit, parts, devices, and accessories forming a part of the equipment furnished.

    a. Included in the submittal shall be the respective manufacturer's materials of construction, complete catalog information and descriptive literature, specifications, performance curves, and detailed dimensional information for the equipment and skid.

    b. Provide system valve submittal data including manufacturer's specifications, performance ratings, and dimensions.

    c. Equipment Supplier's electrical requirements for the packaged VTT system shall include control wiring ladder diagrams, control panel construction details and component cut sheets.

    d. Submit cut sheets of the final skid dimensions, critical equipment dimensions, clearance requirements, connection points, and coordination items to ensure proper layout.

        1) Submit cut sheets in PDF and DWG (AutoCAD) file formats.

3. Make, model, and weight of each equipment assembly.

4. Detailed shop drawings showing elevation and plan views with the equipment dimensions, size, location, clearances, and type of connections.

    a. All shop drawings shall be drawn to scale.

    b. Submit shop drawings in PDF and DWG (AutoCAD) file formats.

5. Detailed shop drawings showing elevation and plan views of interconnecting piping, valves, and meters.

    a. All shop drawings shall be drawn to scale.

    b. Submit shop drawings in PDF and DWG (AutoCAD) file formats.

6. Power and control wiring diagrams, including terminals and numbers.

C. Quality Control Submittals:

1. Current copy of Equipment Supplier's American Society of Mechanical Engineers (ASME) Certification of Authorization and proof of successful operating experience during the last five (5) years on five (5) installations comparable to that specified herein.

2. Current copy of Equipment Supplier's, or inspecting party's, UL certification.

3. Written shipping, unloading, storage, protection, and handling instructions.

INFORMATIONAL COPY ONLY - NOT FOR BIDDING

4. Equipment Supplier's printed installation instructions, including lifting and handling procedures.

5. Recommended spare parts list to maintain the equipment in service for a 5-year period.

    a. Include a list of special tools required for checking, testing, parts replacement, and maintenance with current price information.

6. List of special tools, materials, and supplies furnished with the equipment for use prior to and during start-up.

7. Description of proposed quality control program that shall be used during the manufacturing of equipment.

    a. Include resume of Equipment Supplier's Quality Control Manager.

8. Certification by the Quality Control Manager indicating quality control, testing, and inspection have been completed according to standards specified herein prior to shipment to job site.

    a. Equipment Supplier's Functional and Performance Test Reports.

    b. Quality Control Manager Certification letter.

    c. Equipment Supplier fabrication logs.

9. Certification of the condition of the delivered equipment or materials, and verification of the accuracy of the bill of lading with the actual equipment or materials delivered.

10. Equipment Supplier's certification of proper installation at the site.

D. Closeout Submittals:

1. Submit four (4) copies of the Operation and Maintenance Manuals. At a minimum, the following information shall be included:

    a. Equipment Supplier's instructions for equipment installation, start-up, operation, preventative maintenance, servicing, and troubleshooting procedures.

    b. Manufacturer's data as outlined in the submittal portion of this Specification.

    c. Data on equipment function, normal operating characteristics, and limiting conditions.

    d. All assembly, installation, alignment, adjustment, and checking and maintenance instructions.

    e. Name, address, and telephone number of factory-trained service technician.

    f. Name, address, and telephone number of parts suppliers for all equipment, supplies and control equipment.

INFORMATIONAL COPY ONLY - NOT FOR BIDDING

g. Safety data sheets (SDS).

h. The Operation and Maintenance Manuals shall be in addition to any instructions or parts lists packaged with or attached to the equipment items when delivered.

2. Maintain a set of As-Built Drawings that documents all changes made.

a. Upon completion of the work, transfer these changes to a clean set of full-size Drawings with red ink to indicate additions and green ink to indicate deletions.

1) Submit these full-size As-Built Drawings to the Owner.

2) As-Built Drawings shall be provided in electronic format on Compact Disc in PDF format with borders and title blocks clearly identified.

b. Drawing quality and size of presentation shall be legible at a 50 percent reduction of such drawings; reduced drawings shall be used for insertion into Operations and Maintenance Manuals.

1.05 DELIVERY, STORAGE, AND HANDLING

A. Equipment and materials shall be prepared, protected for shipment and shipped as specified in appropriate ASME and American Society for Testing and Materials (ASTM) standards.

B. All equipment shall be prepared for shipment and shipped in accordance with the Equipment Supplier's recommendations and in a manner which prevents damage to the equipment.

C. All parts shall be properly protected so that no damage or deterioration shall occur in transit or during prolonged storage at the site.

D. All openings in equipment shall be protected against entry of foreign objects.

E. Each box, crate, or package shall be properly marked to show its contents and the net weight.

F. No equipment shall be shipped until all applicable submittals have been received and reviewed by the Engineer.

G. Inspection upon delivery: The Equipment Supplier shall have a representative at the site at the time of delivery of equipment and/or materials.

1. The Equipment Supplier shall inspect the equipment and/or materials.

2. The Equipment Supplier shall certify in writing to the Owner the acceptable condition of the delivered equipment or materials, and shall verify the accuracy of the bill of lading with the actual equipment or materials delivered.

3. Upon approval by the Equipment Supplier, the installing contractor shall be responsible for unloading, storing, and protecting the equipment and materials.

INFORMATIONAL COPY ONLY - NOT FOR BIDDING

1.06 QUALITY CONTROL

A. The VTT specified in this section shall be manufactured under the following minimum quality control program:

1. In order to maintain the highest quality control, the equipment specified herein shall be provided as a package by a single Equipment Supplier.

2. The system shall be furnished by a single Equipment Supplier who shall furnish proof of successful operating experience during the last five (5) years on five (5) installations comparable to that specified herein.

3. The equipment shall be constructed in a fabrication shop which has an ASME "U" Stamp.

4. Welding of vessel internals shall be performed by welders qualified in accordance with the latest ASME Boiler and Pressure Filter Code, Section IX, Welding and Brazing Qualifications.

5. Employment of Quality Control Manager with at least 5 years of experience.

6. Log of system fabrication shall be kept that includes at a minimum:

   a. Start of fabrication and other production milestones.

   b. Production personnel who worked on the system.

   c. Quantity and type of materials used for the system construction.

   d. Settings used for the production equipment during fabrication.

   e. Visual inspection results for system components before and after final assembly.

   f. Test results for completed system as specified in Paragraph 3.01 of this section.

7. Quality Control Manager shall have current production schedule available for inspection that identifies system fabrication or storage locations, current status, and expected completion dates.

8. All areas of facility, where the system or parts thereof, are being manufactured or stored under this Specification, shall be available for inspection by Engineer and Owner during normal working hours.

9. The system shall be accompanied by a signed letter from the Quality Control Manager that the system was manufactured in accordance with these Specifications.

   a. This letter shall be accompanied with test data and Equipment Supplier logs.

   b. The system shall not be accepted at site without prior receipt of this documentation by the Owner.

INFORMATIONAL COPY ONLY - NOT FOR BIDDING

1.07 WARRANTY

A. Furnish warranty, with Owner named as beneficiary, in writing.

1. Warranty shall provide for correction, or at option of Owner, removal and replacement of VTT found to contain defects in materials and workmanship during a period of one (1) year starting when facility is Substantially Complete.

   a. The Contractor shall be solely responsible for the warranty.

      1) Warranties by the Equipment Supplier and manufacturers of various components, in lieu of a single source responsibility by the Contractor, shall not be accepted.

2. Standard material and equipment warranties that exceed the minimum required one (1) year Contractor warranty shall be furnished to the Owner.

B. All equipment supplied shall be warranted to the Owner as follows:

1. All work including mechanical and electrical components of equipment, and/or packaged control systems which are furnished as components of the equipment specified hereinafter, shall be guaranteed against defects in materials and workmanship.

   a. Contractor further warrants that all equipment is merchantable and is suitable for the purpose intended and shall provide the results required by the Contract Documents.

2. The Contractor shall make, at its own expense, all repairs and/or replacement necessitated by defects in materials or workmanship that become evident within the warranty period.

3. The Contractor shall make all repairs and replacements promptly upon receipt of written orders for same from the Owner.

   a. If within ten (10) days after the Owner has notified the Contractor of a defect, the Contractor has not started to make the necessary corrections, the Owner is hereby authorized to make the corrections, or to order the work to be done by a third party, and the cost of the correction shall be paid by the Contractor.

4. Repetitive malfunction of equipment shall be cause for equipment replacement and an extension of the warranty period to a date one (1) year following acceptable replacement or repair.

INFORMATIONAL COPY ONLY- NOT FOR BIDDING

PART 2 – PRODUCTS

2.01 GENERAL

A. Burden is upon the equipment supplier to review intended use, sizing, function, design constraints, and design requirements and confirm equipment described herein (or equal) to provide a functional system as intended. Specifications, Process Flow Diagram, and drawings shall be used unilaterally to describe intent. Any required changes to warranty the equipment shall be made known to the Engineer.

B. All equipment showing an HOA shall have adequate contacts to monitor HOA position.

2.02 EQUIPMENT SUPPLIER

A. Subject to the requirements of the Contract Documents, the following Equipment Suppliers are acceptable:

1. Seneca Companies
   4140 East 14th Street
   Des Moines, IA 50313
   (800) 369-5500
   www.senecaco.com

2. Or Approved Equal.

B. Engineer Approved Equal shall be considered as described below:

1. In compliance with the requirements in Section 01 25 00, "Substitution Procedures."

2. Complete details including system layout and shop drawings shall be submitted no later than ten (10) days prior to the bid date.

   a. Sufficient data shall be submitted so that the Engineer has the required information available to determine that the alternate system meets the requirements of the Contract Documents.

   b. The Contractor shall prepare its bid on the basis of the specific equipment and materials specified for purpose of determining the low bid.

3. After the execution of the Contract, Substitution of non-specified equipment will be considered, if the Substitution is, in the opinion of the Engineer, equal in quality to that named.

   a. In submitting for Substitution, the Contractor shall provide certified copies of equipment proposals from the named manufacturer.

INFORMATIONAL COPY ONLY - NOT FOR BIDDING

2.03 MANUFACTURERS

A. Subject to compliance with requirements of the Contract Documents, products of the following Manufacturers shall be incorporated in the Work of this section:

1. Container:

   a. In accordance with Section 13 34 20, "Pre-Fabricated Intermodal Containers."

2. Knock Out Tank Transfer Pump:

   a. Continental Pump Company, Inc., (636) 456-6006, www.continentalultrapumps.com.

   b. Or Approved Equal.

3. Inline Vacuum Filter:

   a. Solberg Manufacturing, Inc., (630) 616-4400, www.solbergmfg.com.

   b. Or Approved Equal.

4. Clear Trap:

   a. Solberg Manufacturing, Inc., (630) 616-4400, www.solbergmfg.com.

   b. Or Approved Equal.

5. VAE Vacuum Pump:

   a. Busch LLC, (800) 872-7867, www.buschvacuum.com.

   b. Or Approved Equal.

6. Heat Exchanger:

   a. American Industrial Heat Transfer, Inc., (434) 757-1800, www.aihti.com.

   b. Or Approved Equal.

7. Carbon Vessel:

   a. Tetrasolv Filtration, Inc., (765) 643-3941, www.tetrasolv.com.

   b. Or Approved Equal.

8. Air Compressor:

   a. Sullivan Palatek, Inc., (800) 438-6203, www.sullivan-palatek.com.

   b. Or Approved Equal.

INFORMATIONAL COPY ONLY - NOT FOR BIDDING

9. Particulate Filter:

    a. Curtis-Toledo, Inc., (314) 383-1300, www.fscurtis.com.

    b. Or Approved Equal.

10. Coalescing Filter:

    a. Curtis-Toledo, Inc., (314) 383-1300, www.fscurtis.com.

    b. Or Approved Equal.

11. Air Filter:

    a. Solberg Manufacturing, Inc., (630) 616-4400, www.solbergmfg.com.

    b. Or Approved Equal.

2.04 INTERMODAL CONTAINER

A. Container shall be in accordance with Section 13 34 20, "Pre-Fabricated Intermodal Containers."

2.05 KNOCKOUT TANK SKID (SKID 3)

A. Knockout Tank (T-201):

1. 120-Gallon condensate separator tank.
2. Epoxy painted steel tank.
3. Stainless steel demister element.
4. 8-Inch tank bottom clean out port.
5. 8-Inch clean out port for stainless steel demister element replacement.
6. Drain valve.
7. 2-Inch pump out connection.
8. Site tube with 3-level switch at elevations approved by the Engineer.
9. Vacuum relief valve.
10. 3-Inch flanged inlet/outlet connections.

INFORMATIONAL COPY ONLY - NOT FOR BIDDING

B. Knockout Tank Transfer Pump (P-201)

1. Progressive cavity pump Class 1, Division 2 motor with associated valves, pressure gage, and sample port.

   a. 0.75 HP, 480 V, 3 Phase, totally enclosed, fan-cooled (TEFC).

   b. 5 gpm at 25 psi.

   c. All wetted materials to be SST.

   d. Equipment supplier to verify that $NPSH_A > NPSH_R$.

2. Manufacturer/Model:

   a. Continental Pump Company, Inc. – Model CP44C-CSQM with stator barrier

   b. Or Approved Equal.

C. Inline Vacuum Filter:

1. 99 percent minimum removal efficiency standard to 2 micron.

2. Manufacturer/Model:

   a. Solberg Manufacturing, Inc. – Model CT-235P-400C

   b. Or Approved Equal.

D. Clear Trap:

1. Manufacturer/Model:

   a. Solberg Manufacturing, Inc. – Model CT-235P-400C

   b. Or Approved Equal.

E. Flow Meter:

1. Flow meter: A flow meter shall be an inline meter installed between the clear trap and vacuum pump.

2. Flow meter shall be capable of measuring a flow range equivalent to the vacuum pump capacity.

F. VAE Vacuum Pump (P-202):

1. Design Capacity with VFD in accordance with Paragraph 2.10 and design points shown in Table 1 of Paragraph 1.03.

2. 15 HP, 480 V, 3 Phase, TEFC, 1.15 SF, 3,600 rpm.

INFORMATIONAL COPY ONLY - NOT FOR BIDDING

3. Oil free pumping chamber.

4. Discharge silencer.

5. Manufacturer/Model:

   a. Busch LLC – Model Mink MM 1202 AV

   b. Or Approved Equal.

2.06 AIR FILTERS

A. Dilution Air Intake Filter/Silencer:

   1. 2-inch with 2-inch ball valve.

   2. 99 percent minimum removal efficiency standard to 2 micron.

B. Manufacturer/Model:

   1. Solberg Manufacturing, Inc. – Model FS-30P-200

   2. Or Approved Equal.

2.07 HEAT EXCHANGER (W-201)

A. 120 SCFM, Inlet Temperature = 260 degrees F, Exit Temperature = 120 degrees F, Fan Inlet Temp = 105 degrees F.

B. Two Pass.

C. Maximum Allowable Pressure Drop = 5 inches H_2O.

D. 182T Frame TEFC Motor, 3 HP, 230/460 V, 3 Phase, TEFC, 1.15 SF.

E. Manufacturer/Model:

   1. American Industrial Heat Transfer, Inc. – Model ACA 6362-3.

   2. Or Approved Equal.

2.08 CARBON VESSEL (VAPOR PHASE CARBON, GAC-1, GAC-2, GAC-3)

A. Quantity: 3.

B. GAC-1 and GAC-2:

   1. 500 pounds virgin, 4x10 mesh granular activated carbon per canister.

   2. <5-inch WC through two canisters at 300 SCFM.

INFORMATIONAL COPY ONLY - NOT FOR BIDDING

3. 4-inch flanged inlet/outlet.
4. 1/2-inch drain.
5. False floor.
6. Internal coating polyamide epoxy resin.
7. External coating epoxy mastic.
8. Manufacturer/Model:
    a. Tetrasolv Filtration, Inc. – Model VF-500.
    b. Or Approved Equal.

C. GAC-3:

1. 200 pounds virgin, 4x10 mesh granular activated carbon.
2. 2” inlet 2” outlet, male threaded NPT.
3. Epoxy internal liner.
4. Manufacturer/Model:
    a. Pure Effect, Inc. – Model PEV – 200.
    b. Or Approved Equal.

2.09 COMPRESSED AIR SKID (SKID 4)

A. Air Compressor (C-1):

1. Reciprocating style.
2. 75 SCFM at 125 psi.
3. 120-Gallon Receiver Tank (with compressor on top).
4. 15 HP 460 V, 3 Phase.
5. Desiccant air dryer.
6. Coalescing filter.
7. 3-way solenoid (Drawing M3.3) fail closed to depressurize downstream lines.
8. Include compressor wire on skid to run in auto mode.

INFORMATIONAL COPY ONLY - NOT FOR BIDDING

9. Manufacturer/Model:

    a. Sullivan Palatek, Inc. – Model 20CDD12.

    b. Or Approved Equal.

B. Particulate Filter:

1. Manufacturer/Model:

    a. Curtis – Model CF7-32-12-DGL

    b. Or Approved Equal.

2.10 MASTER CONTROL PANEL

A. The VTT shall include controls that shall be integrated into one, centralized Master Control Panel (MCP) located in the VTT Container.

B. The MCP shall be in accordance with Section 13 34 20, "Pre-Fabricated Intermodal Containers."

PART 3 – EXECUTION

3.01 PRE-DELIVERY TESTING

A. The packaged VTT system shall be tested at the fabrication facility as a complete unit.

1. The system shall be operated across the complete flow range to assure proper control sequence and operational stability.

2. All control and alarm functions shall be simulated as part of the factory testing.

3. The completed system shall be leak and pressure tested across the entire flow range.

    a. Testing of individual, isolated components and equipment shall not be acceptable, unless approved otherwise by the Engineer.

4. Certified component testing in lieu of complete package testing shall not be acceptable.

INFORMATIONAL COPY ONLY - NOT FOR BIDDING

3.02 INSTALLATION

A. Installation shall be in strict accordance with each system component/equipment manufacturer's instructions and recommendations.

B. Equipment shall be placed in the locations shown on the Drawings, unless otherwise directed by the Engineer.

C. Coordination of equipment and systems to the available space, with other trades, and to the access routes through the construction shall be the Contractor's responsibility.

D. Make offsets, transitions, and changes in direction of pipes and ducts, as required to maintain proper headroom and pitch of sloping lines and avoid structural, electrical, pipe and duct interferences whether or not indicated on Drawings.

   1. Furnish fittings, etc., as required to make these offsets, transitions and changes in direction.

E. Determine exact route and location of each pipe and duct and coordinate and obtain approval for changes from the layout indicated on the Drawings with the Engineer prior to fabrication.

F. Verify the physical dimensions of each item of mechanical equipment to fit the available space and promptly notify the Engineer prior to roughing-in if conflicts appear.

3.03 FIELD ERECTION SUPERVISION AND TRAINING

A. Provide continuous Equipment Supplier field erection supervision during erection and installation of VTT.

   1. The Equipment Supplier's erection and installation supervisor shall have at least 3 years of experience in installation of similar VTT systems.

   2. Erection and installation supervisor shall estimate the equipment requirements, and provide this estimate in writing to Engineer as part of the equipment installation instructions.

   3. Erection and installation supervisor shall hold a pre-installation conference with Owner and Engineer to fully describe the requirements of the equipment and work.

   4. Upon completion of installation, Equipment Supplier shall provide Engineer written certification that the equipment installation conforms to Equipment Supplier's instructions and designs.

B. Electrical connection to the container enclosures shall be provided by the Electrical Contractor as specified elsewhere.

INFORMATIONAL COPY ONLY - NOT FOR BIDDING

C. The Equipment Supplier shall provide a Field Representative for adjusting, testing, and certification to include at a minimum:

1. Delivery inspection and certification.

2. Installation inspection and certification of the installation.

3. Start-up and operational and performance testing.

D. Provide operator a minimum of 2 (two) days Owner training, as required to develop proficient capabilities for equipment operation and maintenance personnel.

E. Contractor shall provide a minimum of five (5) working days' notice to Owner prior to the start of installation activities.

END OF SECTION

INFORMATIONAL COPY ONLY - NOT FOR BIDDING

This Page Intentionally Left Blank

INFORMATIONAL COPY ONLY - NOT FOR BIDDING

Appendix A

Title VI – Contractor Requirements

INFORMATIONAL COPY ONLY - NOT FOR BIDDING

TITLE VI – CONTRACTOR REQUIREMENTS

During the performance of this contract, the contractor/consultant, for itself, its assignees and successors in interest (hereinafter referred to as the "contractor") agrees as follows:

1. Compliance with Regulations
The contractor shall comply with the Regulations relative to non-discrimination in federally assisted programs of United States Department of Transportation (USDOT), Title 49, Code of Federal Regulations, part 21, as they may be amended from time to time, (hereinafter referred to as the Regulations), which are herein incorporated by reference and made a part of this contract.

2. Non-discrimination
The contractor, with regard to the work performed by it during the contract, shall not discriminate on the grounds of race, color, sex, or national origin in the selection and retention of sub-contractors, including procurement of materials and leases of equipment. The contractor shall not participate either directly or indirectly in the discrimination prohibited by Section 21.5 of the Regulations, including employment practices when the contract covers a program set forth in Appendix B of the Regulations.

3. Solicitations for Sub-contracts, Including Procurement of Materials and Equipment
In all solicitations either by competitive bidding or negotiations made by the contractor for work to be performed under a sub-contract, including procurement of materials or leases of equipment, each potential sub-contractor or supplier shall be notified by the contractor of the contractor's obligations under this contract and the Regulations relative to non-discrimination on the grounds of race, color, sex, or national origin.

4. Information and Reports
The contractor shall provide all information and reports required by the Regulations or directives issued pursuant thereto, and shall permit access to its books, records, accounts, other sources of information, and its facilities as may be determined by the contracting agency or the appropriate federal agency to be pertinent to ascertain compliance with such Regulations, orders and instructions. Where any information required of a contractor is in the exclusive possession of another who fails or refuses to furnish this information, the contractor shall so certify to WSDOT or the USDOT as appropriate, and shall set forth what efforts it has made to obtain the information.

5. Sanctions for Non-compliance
In the event of the contractor's non-compliance with the non-discrimination provisions of this contract, the contracting agency shall impose such contract sanctions as it or the USDOT may determine to be appropriate, including, but not limited to:

- Withholding of payments to the contractor under the contract until the contractor complies, and/or;
- Cancellation, termination, or suspension of the contract, in whole or in part

INFORMATIONAL COPY ONLY - NOT FOR BIDDING

6. Incorporation of Provisions

The contractor shall include the provisions of paragraphs (1) through (5) in every sub-contract, including procurement of materials and leases of equipment, unless exempt by the Regulations, or directives issued pursuant thereto. The contractor shall take such action with respect to any sub-contractor or procurement as the contracting agency or USDOT may direct as a means of enforcing such provisions including sanctions for non-compliance.

Provided, however, that in the event a contractor becomes involved in, or is threatened with, litigation with a sub-contractor or supplier as a result of such direction, the contractor may request WSDOT enter into such litigation to protect the interests of the state and, in addition, the contractor may request the USDOT enter into such litigation to protect the interests of the United States.

INFORMATIONAL COPY ONLY - NOT FOR BIDDING

Appendix B

State Wage Rates

INFORMATIONAL COPY ONLY- NOT FOR BIDDING

State of Washington
Department of Labor & Industries

Prevailing Wage Section - Telephone 360-902-5335
PO Box 44540, Olympia, WA 98504-4540

Washington State Prevailing Wage

The PREVAILING WAGES listed here include both the hourly wage rate and the hourly rate of fringe benefits. On public works projects, worker's wage and benefit rates must add to not less than this total. A brief description of overtime calculation requirements are provided on the Benefit Code Key.

Journey Level Prevailing Wage Rates for the Effective Date: 06/27/2016

INFORMATIONAL COPY ONLY - NOT FOR BIDDING

County	Trade	Job Classification	Wage	Holiday	Overtime	Note
Grant	Asbestos Abatement Workers	Journey Level	$20.79		1	
Grant	Boilermakers	Journey Level	$64.29	5N	1C	
Grant	Brick Mason	Journey Level	$44.94	5A	1M	
Grant	Building Service Employees	Janitor	$12.56		1	
Grant	Building Service Employees	Shampooer	$11.14		1	
Grant	Building Service Employees	Waxer	$9.47		1	
Grant	Building Service Employees	Window Cleaner	$9.47		1	
Grant	Cabinet Makers (In Shop)	Journey Level	$9.47		1	
Grant	Carpenters	Carpenters	$40.76	5A	1B	8N
Grant	Cement Masons	Journey Level	$39.60	7B	1N	
Grant	Divers & Tenders	Diver	$86.59	5A	1B	8A
Grant	Divers & Tenders	Diver on Standby	$49.87	5A	1B	
Grant	Divers & Tenders	Diver Tender	$48.17	5A	1B	
Grant	Divers & Tenders	Diving Master	$58.71	5A	1B	
Grant	Divers & Tenders	Surface RCV & ROV Operator	$48.17	5A	1B	
Grant	Divers & Tenders	Surface RCV & ROV Operator Tender	$48.17	5A	1B	
Grant	Dredge Workers	Assistant Engineer	$56.44	5D	3F	
Grant	Dredge Workers	Assistant Mate (Deckhand)	$56.00	5D	3F	
Grant	Dredge Workers	Boatmen	$56.44	5D	3F	
Grant	Dredge Workers	Engineer Welder	$57.51	5D	3F	
Grant	Dredge Workers	Leverman, Hydraulic	$58.67	5D	3F	
Grant	Dredge Workers	Mates	$56.44	5D	3F	
Grant	Dredge Workers	Oiler	$56.00	5D	3F	
Grant	Drywall Applicator	Journey Level	$40.76	5A	1B	8N
Grant	Drywall Tapers	Journey Level	$36.10	7E	1P	
Grant	Electrical Fixture Maintenance Workers	Journey Level	$24.88		1	
Grant	Electricians - Inside	Cable Splicer	$60.54	7H	1E	
Grant	Electricians - Inside	Construction Stock Person	$31.71	7H	1D	

Grant	Electricians - Inside	Journey Level	$56.60	7H	1E	
Grant	Electricians - Motor Shop	Craftsman	$15.37		1	
Grant	Electricians - Motor Shop	Journey Level	$14.69		1	
Grant	Electricians - Powerline Construction	Cable Splicer	$74.92	5A	4D	
Grant	Electricians - Powerline Construction	Certified Line Welder	$65.71	5A	4D	
Grant	Electricians - Powerline Construction	Groundperson	$44.12	5A	4D	
Grant	Electricians - Powerline Construction	Heavy Line Equipment Operator	$65.71	5A	4D	
Grant	Electricians - Powerline Construction	Journey Level Lineperson	$65.71	5A	4D	
Grant	Electricians - Powerline Construction	Line Equipment Operator	$55.34	5A	4D	
Grant	Electricians - Powerline Construction	Pole Sprayer	$65.71	5A	4D	
Grant	Electricians - Powerline Construction	Powderperson	$49.16	5A	4D	
Grant	Electronic Technicians	Journey Level	$17.31		1	
Grant	Elevator Constructors	Mechanic	$85.45	7D	4A	
Grant	Elevator Constructors	Mechanic In Charge	$92.35	7D	4A	
Grant	Fabricated Precast Concrete Products	Journey Level - In-Factory Work Only	$9.96		1	
Grant	Fence Erectors	Fence Erector	$13.80		1	
Grant	Fence Erectors	Fence Laborer	$11.60		1	
Grant	Flaggers	Journey Level	$33.91	7B	1M	
Grant	Glaziers	Journey Level	$24.39	7E	1K	
Grant	Heat & Frost Insulators And Asbestos Workers	Journey Level	$45.77		1	
Grant	Heating Equipment Mechanics	Journey Level	$27.67		1	
Grant	Hod Carriers & Mason Tenders	Journey Level	$37.54	7B	1M	
Grant	Industrial Power Vacuum Cleaner	Journey Level	$9.47		1	
Grant	Inland Boatmen	Journey Level	$9.47		1	
Grant	Inspection/Cleaning/Sealing Of Sewer & Water Systems By Remote Control	Cleaner Operator, Foamer Operator	$9.73		1	
Grant	Inspection/Cleaning/Sealing Of Sewer & Water Systems By Remote Control	Grout Truck Operator	$11.48		1	
Grant	Inspection/Cleaning/Sealing Of Sewer & Water Systems By Remote Control	Head Operator	$12.78		1	
Grant	Inspection/Cleaning/Sealing Of Sewer & Water Systems By Remote Control	Technician	$9.47		1	
Grant	Inspection/Cleaning/Sealing Of Sewer & Water Systems By Remote Control	Tv Truck Operator	$10.53		1	

INFORMATIONAL COPY ONLY - NOT FOR BIDDING

Grant	Insulation Applicators	Journey Level	$40.76	5A	1B	8N
Grant	Ironworkers	Journeyman	$56.20	7N	1O	
Grant	Laborers	Air And Hydraulic Track Drill	$36.55	7B	1M	
Grant	Laborers	Asphalt Raker	$36.55	7B	1M	
Grant	Laborers	Asphalt Roller, Walking	$36.28	7B	1M	
Grant	Laborers	Brick Pavers	$36.01	7B	1M	
Grant	Laborers	Brush Hog Feeder	$36.01	7B	1M	
Grant	Laborers	Brush Machine	$36.55	7B	1M	
Grant	Laborers	Caisson Worker, Free Air	$36.55	7B	1M	
Grant	Laborers	Carpenter Tender	$36.01	7B	1M	
Grant	Laborers	Cement Finisher Tender	$36.28	7B	1M	
Grant	Laborers	Cement Handler	$36.01	7B	1M	
Grant	Laborers	Chain Saw Operator & Faller	$36.55	7B	1M	
Grant	Laborers	Clean-up Laborer	$36.01	7B	1M	
Grant	Laborers	Compaction Equipment	$36.28	7B	1M	
Grant	Laborers	Concrete Crewman	$36.01	7B	1M	
Grant	Laborers	Concrete Saw, Walking	$36.28	7B	1M	
Grant	Laborers	Concrete Signalman	$36.01	7B	1M	
Grant	Laborers	Concrete Stack	$36.55	7B	1M	
Grant	Laborers	Confined Space Attendant	$36.01	7B	1M	
Grant	Laborers	Crusher Feeder	$36.01	7B	1M	
Grant	Laborers	Demolition	$36.01	7B	1M	
Grant	Laborers	Demolition Torch	$36.28	7B	1M	
Grant	Laborers	Dope Pot Fireman, Non-mechanical	$36.28	7B	1M	
Grant	Laborers	Driller Helper (when Required To Move & Position Machine)	$36.28	7B	1M	
Grant	Laborers	Drills With Dual Masts	$36.83	7B	1M	
Grant	Laborers	Dry Stack Walls	$36.01	7B	1M	
Grant	Laborers	Dumpman	$36.01	7B	1M	
Grant	Laborers	Erosion Control Laborer	$36.01	7B	1M	
Grant	Laborers	Final Detail Cleanup (i.e., Dusting, Vacuuming, Window Cleaning; Not Construction Debris Cleanup)	$33.91	7B	1M	
Grant	Laborers	Firewatch	$36.01	7B	1M	
Grant	Laborers	Form Cleaning Machine Feeder, Stacker	$36.01	7B	1M	
Grant	Laborers	Form Setter, Paving	$36.28	7B	1M	
Grant	Laborers	General Laborer	$36.01	7B	1M	
Grant	Laborers	Grade Checker	$38.54	7B	1M	
Grant	Laborers	Grout Machine Header Tender	$36.01	7B	1M	
Grant	Laborers	Guard Rail	$36.01	7B	1M	
Grant	Laborers	Gunite	$36.55	7B	1M	
Grant	Laborers	Hazardous Waste Worker (level A)	$36.83	7B	1M	
Grant	Laborers		$36.55	7B	1M	

INFORMATIONAL COPY ONLY - NOT FOR BIDDING

		Hazardous Waste Worker (level B)				
Grant	Laborers	Hazardous Waste Worker (level C)	$36.28	7B	1M	
Grant	Laborers	Hazardous Waste Worker (level D)	$36.01	7B	1M	
Grant	Laborers	Hdpe Or Similar Liner Installer	$36.01	7B	1M	
Grant	Laborers	High Scaler	$36.55	7B	1M	
Grant	Laborers	Jackhammer Operator Miner, Class "b"	$36.28	7B	1M	
Grant	Laborers	Laser Beam Operator	$36.55	7B	1M	
Grant	Laborers	Miner, Class "a"	$36.01	7B	1M	
Grant	Laborers	Miner, Class "c"	$36.55	7B	1M	
Grant	Laborers	Miner, Class "d"	$36.83	7B	1M	
Grant	Laborers	Monitor Operator, Air Track Or Similar Mounting	$36.55	7B	1M	
Grant	Laborers	Mortar Mixer	$36.55	7B	1M	
Grant	Laborers	Nipper	$36.01	7B	1M	
Grant	Laborers	Nozzleman	$36.55	7B	1M	
Grant	Laborers	Nozzleman, Water (to Include Fire Hose), Air Or Steam	$36.28	7B	1M	
Grant	Laborers	Pavement Breaker, 90 Lbs. & Over	$36.55	7B	1M	
Grant	Laborers	Pavement Breaker, Under 90 Lbs.	$36.28	7B	1M	
Grant	Laborers	Pipelayer	$36.55	7B	1M	
Grant	Laborers	Pipelayer, Corrugated Metal Culvert And Multi-plate	$36.28	7B	1M	
Grant	Laborers	Pipewrapper	$36.55	7B	1M	
Grant	Laborers	Plasterer Tenders	$36.55	7B	1M	
Grant	Laborers	Pot Tender	$36.28	7B	1M	
Grant	Laborers	Powderman	$38.20	7B	1M	
Grant	Laborers	Powderman Helper	$36.28	7B	1M	
Grant	Laborers	Power Buggy Operator	$36.28	7B	1M	
Grant	Laborers	Power Tool Operator, Gas, Electric, Pneumatic	$36.28	7B	1M	
Grant	Laborers	Railroad Equipment, Power Driven, Except Dual Mobile	$36.28	7B	1M	
Grant	Laborers	Railroad Power Spiker Or Puller, Dual Mobile	$36.28	7B	1M	
Grant	Laborers	Remote Equipment Operator	$36.83	7B	1M	
Grant	Laborers	Remote Equipment Operator (i.e. Compaction And Demolition)	$36.28	7B	1M	
Grant	Laborers	Rigger/signal Person	$36.28	7B	1M	
Grant	Laborers	Riprap Person	$36.01	7B	1M	
Grant	Laborers	Rodder & Spreader	$36.28	7B	1M	
Grant	Laborers	Sandblast Tailhoseman	$36.01	7B	1M	

INFORMATIONAL COPY ONLY- NOT FOR BIDDING

Grant	Laborers	Scaffold Erector, Wood Or Steel	$36.01	7B	1M	
Grant	Laborers	Stake Jumper	$36.01	7B	1M	
Grant	Laborers	Structural Mover	$36.01	7B	1M	
Grant	Laborers	Tailhoseman (water Nozzle)	$36.01	7B	1M	
Grant	Laborers	Timber Bucker & Faller (by Hand)	$36.01	7B	1M	
Grant	Laborers	Track Laborer (rr)	$36.01	7B	1M	
Grant	Laborers	Traffic Control Laborer	$33.91	7B	1M	8T
Grant	Laborers	Traffic Control Supervisor	$34.91	7B	1M	8S
Grant	Laborers	Trencher, Shawnee	$36.28	7B	1M	
Grant	Laborers	Trenchless Technology Technician	$36.55	7B	1M	
Grant	Laborers	Truck Loader	$36.01	7B	1M	
Grant	Laborers	Tugger Operator	$36.28	7B	1M	
Grant	Laborers	Vibrators, All	$36.55	7B	1M	
Grant	Laborers	Wagon Drills	$36.28	7B	1M	
Grant	Laborers	Water Pipe Liner	$36.28	7B	1M	
Grant	Laborers	Welder, Electric, Manual Or Automatic (hdpe Or Similar Pipe And Liner)	$36.83	7B	1M	
Grant	Laborers	Well-point Person	$36.01	7B	1M	
Grant	Laborers	Wheelbarrow, Power Driven	$36.28	7B	1M	
Grant	Laborers - Underground Sewer & Water	General Laborer & Topman	$36.01	7B	1M	
Grant	Laborers - Underground Sewer & Water	Pipe Layer	$36.55	7B	1M	
Grant	Landscape Construction	Irrigation Or Lawn Sprinkler Installers	$9.47		1	
Grant	Landscape Construction	Landscape Equipment Operators Or Truck Drivers	$9.47		1	
Grant	Landscape Construction	Landscaping Or Planting Laborers	$9.47		1	
Grant	Lathers	Journey Level	$40.76	5A	1B	8N
Grant	Marble Setters	Journey Level	$44.94	5A	1M	
Grant	Metal Fabrication (In Shop)	Fitter	$10.79		1	
Grant	Metal Fabrication (In Shop)	Painter	$9.47		1	
Grant	Metal Fabrication (In Shop)	Welder	$10.79		1	
Grant	Millwright	Journey Level	$56.35	5A	1B	8N
Grant	Modular Buildings	Journey Level	$9.47		1	
Grant	Painters	Journey Level	$39.35	6Z	2B	
Grant	Pile Driver	Journey Level	$41.80	5A	1B	8N
Grant	Plasterers	Journey Level	$10.00		1	
Grant	Playground & Park Equipment Installers	Journey Level	$9.47		1	
Grant	Plumbers & Pipefitters	Journey Level	$78.33	6Z	1Q	
Grant	Power Equipment Operators	A-frame Truck (2 Or More Drums)	$40.64	7B	1M	8D

INFORMATIONAL COPY ONLY - NOT FOR BIDDING

Grant	Power Equipment Operators	A-frame Truck (single Drum)	$40.03	7B	1M	8D
Grant	Power Equipment Operators	Asphalt Plant Operator	$41.24	7B	1M	8D
Grant	Power Equipment Operators	Assistant Plant Operator, Fireman Or Pugmixer (asphalt)	$40.03	7B	1M	8D
Grant	Power Equipment Operators	Assistant Refrigeration Plant & Chiller Operator (over 1000 Ton)	$40.64	7B	1M	8D
Grant	Power Equipment Operators	Assistant Refrigeration Plant (under 1000 Ton)	$40.03	7B	1M	8D
Grant	Power Equipment Operators	Automatic Subgrader (ditches & Trimmers)	$41.24	7B	1M	8D
Grant	Power Equipment Operators	Backfillers (cleveland & Similar)	$40.64	7B	1M	8D
Grant	Power Equipment Operators	Backhoe & Hoe Ram (under 3/4 Yd.)	$40.96	7B	1M	8D
Grant	Power Equipment Operators	Backhoe (45,000 Gw & Under)	$40.96	7B	1M	8D
Grant	Power Equipment Operators	Backhoe (45,000 Gw To 110,000 Gw)	$41.24	7B	1M	8D
Grant	Power Equipment Operators	Backhoe (over 110,000 Gw)	$41.51	7B	1M	8D
Grant	Power Equipment Operators	Backhoes & Hoe Ram (3 Yds & Over)	$41.51	7B	1M	8D
Grant	Power Equipment Operators	Backhoes & Hoe Ram (3/4 Yd. To 3 Yd.)	$41.24	7B	1M	8D
Grant	Power Equipment Operators	Bagley Or Stationary Scraper	$40.03	7B	1M	8D
Grant	Power Equipment Operators	Batch & Wet Mix Operator (multiple Units, 2 & Incl. 4)	$41.24	7B	1M	8D
Grant	Power Equipment Operators	Batch Plant & Wet Mix Operator, Single Unit (concrete)	$40.64	7B	1M	8D
Grant	Power Equipment Operators	Batch Plant (over 4 Units)	$41.24	7B	1M	8D
Grant	Power Equipment Operators	Belt Finishing Machine	$40.03	7B	1M	8D
Grant	Power Equipment Operators	Belt Loader (kocal Or Similar)	$40.64	7B	1M	8D
Grant	Power Equipment Operators	Belt-crete Conveyors With Power Pack Or Similar	$40.64	7B	1M	8D
Grant	Power Equipment Operators	Bending Machine	$40.64	7B	1M	8D
Grant	Power Equipment Operators	Bit Grinders	$39.71	7B	1M	8D
Grant	Power Equipment Operators	Blade (finish & Bluetop), Automatic, Cmi, Abc, Finish Athey & Huber & Similar When Used As Automatic	$41.51	7B	1M	8D
Grant	Power Equipment Operators	Blade Operator (motor Patrol & Attachments)	$41.24	7B	1M	8D
Grant	Power Equipment Operators	Blower Operator (cement)	$40.03	7B	1M	8D
Grant	Power Equipment Operators	Boat Operator	$39.71	7B	1M	8D
Grant	Power Equipment Operators	Bob Cat (skid Steer)	$40.64	7B	1M	8D
Grant	Power Equipment Operators	Bolt Threading Machine	$39.71	7B	1M	8D
Grant	Power Equipment Operators	Boom Cats (side)	$41.24	7B	1M	8D
Grant	Power Equipment Operators	Boring Machine (earth)	$40.64	7B	1M	8D
Grant	Power Equipment Operators		$40.64	7B	1M	8D

INFORMATIONAL COPY ONLY - NOT FOR BIDDING

		Boring Machine (Rock Under 8 inch Bit - Quarry Master, Joy Or Similar)				
Grant	Power Equipment Operators	Bump Cutter (wayne, Saginau Or Similar)	$40.64	7B	1M	8D
Grant	Power Equipment Operators	Cableway Controller (dispatcher)	$41.24	7B	1M	8D
Grant	Power Equipment Operators	Cableway Operators	$41.51	7B	1M	8D
Grant	Power Equipment Operators	Canal Lining Machine (concrete)	$40.64	7B	1M	8D
Grant	Power Equipment Operators	Carrydeck & Boom Truck (under 25 Tons)	$40.96	7B	1M	8D
Grant	Power Equipment Operators	Cement Hog	$40.03	7B	1M	8D
Grant	Power Equipment Operators	Chipper (without Crane) Cleaning & Doping Machine (pipeline)	$40.64	7B	1M	8D
Grant	Power Equipment Operators	Clamshell, Dragline	$42.61	7B	1M	8D
Grant	Power Equipment Operators	Compactor (self-propelled With Blade)	$41.24	7B	1M	8D
Grant	Power Equipment Operators	Compressor (2000 Cfm Or Over, 2 Or More, Gas Diesel Or Electric Power)	$40.03	7B	1M	8D
Grant	Power Equipment Operators	Compressors (under 2000 Cfm, Gas, Diesel Or Electric Power)	$39.71	7B	1M	8D
Grant	Power Equipment Operators	Concrete Cleaning / Decontamination Machine Operator	$41.51	7B	1M	8D
Grant	Power Equipment Operators	Concrete Pump Boon Truck	$41.24	7B	1M	8D
Grant	Power Equipment Operators	Concrete Pumps (squeeze-crete, Flow-crete, Whitman & Similar)	$40.80	7B	1M	8D
Grant	Power Equipment Operators	Concrete Saw (multiple Cut)	$40.03	7B	1M	8D
Grant	Power Equipment Operators	Concrete Slip Form Paver	$41.24	7B	1M	8D
Grant	Power Equipment Operators	Conveyor Aggregate Delivery Systems (c.a.d.)	$41.24	7B	1M	8D
Grant	Power Equipment Operators	Crane Oiler- Driver (cdl Required) & Cable Tender, Mucking Machine	$39.71	7B	1M	8D
Grant	Power Equipment Operators	Cranes (25 Tons & Under), All Attachments Incl. Clamshell, Dragline	$40.96	7B	1M	8D
Grant	Power Equipment Operators	Cranes (25 Tons To And Including 45 Tons), All Attachments Incl. Clamshell, Dragline	$41.24	7B	1M	8D
Grant	Power Equipment Operators	Cranes (45 Tons To 85 Tons), All Attachments Incl. Clamshell And Dragline	$41.51	7B	1M	8D
Grant	Power Equipment Operators	Cranes (85 Tons & Over) And All Climbing, Overhead, Rail & Tower. All Attachments Incl.	$42.61	7B	1M	8D
Grant	Power Equipment Operators	Crusher Feeder	$39.71	7B	1M	8D

INFORMATIONAL COPY ONLY, NOT FOR BIDDING

Grant	Power Equipment Operators	Crusher, Grizzle & Screening Plant Operator	$41.24	7B	1M	8D
Grant	Power Equipment Operators	Curb Extruder (asphalt Or Concrete)	$40.80	7B	1M	8D
Grant	Power Equipment Operators	Deck Engineer	$40.64	7B	1M	8D
Grant	Power Equipment Operators	Deck Hand	$39.71	7B	1M	8D
Grant	Power Equipment Operators	Derricks & Stifflegs (65 Tons & Over)	$41.51	7B	1M	8D
Grant	Power Equipment Operators	Derricks & Stifflegs (under 65 Tons)	$40.96	7B	1M	8D
Grant	Power Equipment Operators	Distributor Leverman	$40.03	7B	1M	8D
Grant	Power Equipment Operators	Ditch Witch Or Similar	$40.03	7B	1M	8D
Grant	Power Equipment Operators	Dope Pots (power Agitated	$40.03	7B	1M	8D
Grant	Power Equipment Operators	Dozer / Tractor (up To D-6 Or Equivalent) And Traxcavator	$40.64	7B	1M	8D
Grant	Power Equipment Operators	Dozer / Tractors (d-6 & Equivalent & Over)	$41.24	7B	1M	8D
Grant	Power Equipment Operators	Dozer, 834 R/t & Similar	$41.24	7B	1M	8D
Grant	Power Equipment Operators	Drill Doctor	$41.24	7B	1M	8D
Grant	Power Equipment Operators	Driller Licensed	$42.61	7B	1M	8D
Grant	Power Equipment Operators	Drillers Helper	$39.71	7B	1M	8D
Grant	Power Equipment Operators	Drilling Equipment (8 inch Bit & Over - Robbins, Reverse Circulation & Similar)	$40.96	7B	1M	8D
Grant	Power Equipment Operators	Drills (churn, Core, Calyx Or Diamond)	$40.80	7B	1M	8D
Grant	Power Equipment Operators	Elevating Belt (holland Type)	$41.51	7B	1M	8D
Grant	Power Equipment Operators	Elevating Belt-type Loader (euclid, Barber Green & Similar)	$40.64	7B	1M	8D
Grant	Power Equipment Operators	Elevating Grader-type Loader (dumor, Adams Or Similar)	$40.64	7B	1M	8D
Grant	Power Equipment Operators	Elevator Hoisting Materials	$40.03	7B	1M	8D
Grant	Power Equipment Operators	Equipment Serviceman, Greaser & Oiler	$40.80	7B	1M	8D
Grant	Power Equipment Operators	Fireman & Heater Tender	$39.71	7B	1M	8D
Grant	Power Equipment Operators	Fork Lift Or Lumber Stacker, Hydra-life & Similar	$40.03	7B	1M	8D
Grant	Power Equipment Operators	Generator Plant Engineers (diesel Or Electric)	$40.64	7B	1M	8D
Grant	Power Equipment Operators	Gin Trucks (pipeline)	$40.03	7B	1M	8D
Grant	Power Equipment Operators	Grade Checker	$40.96	7B	1M	8D
Grant	Power Equipment Operators	Gunite Combination Mixer & Compressor	$40.64	7B	1M	8D
Grant	Power Equipment Operators	H.d. Mechanic	$41.51	7B	1M	8D
Grant	Power Equipment Operators	H.d. Welder	$41.51	7B	1M	8D
Grant	Power Equipment Operators	Heavy Equipment Robotics Operator	$41.51	7B	1M	8D
Grant	Power Equipment Operators	Helicopter Pilot	$42.61	7B	1M	8D

INFORMATIONAL COPY ONLY - NOT FOR BIDDING

Grant	Power Equipment Operators	Helper, Mechanic Or Welder, H.D	$39.71	7B	1M	8D
Grant	Power Equipment Operators	Hoe Ram	$40.96	7B	1M	8D
Grant	Power Equipment Operators	Hoist (2 Or More Drums Or Tower Hoist)	$40.80	7B	1M	8D
Grant	Power Equipment Operators	Hoist, Single Drum	$40.03	7B	1M	8D
Grant	Power Equipment Operators	Hydraulic Platform Trailers (goldhofer, Shaurerly And Similar)	$41.51	7B	1M	8D
Grant	Power Equipment Operators	Hydro-seeder, Mulcher, Nozzleman	$39.71	7B	1M	8D
Grant	Power Equipment Operators	Lime Batch Tank Operator (recycle Train)	$41.24	7B	1M	8D
Grant	Power Equipment Operators	Lime Brain Operator (recycle Train)	$41.24	7B	1M	8D
Grant	Power Equipment Operators	Loader (360 Degrees Revolving Koehring Scooper Or Similar)	$41.51	7B	1M	8D
Grant	Power Equipment Operators	Loader Operator (front-end & Overhead, 4 Yds. Incl. 8 Yds.)	$41.24	7B	1M	8D
Grant	Power Equipment Operators	Loaders (bucket Elevators And Conveyors)	$40.03	7B	1M	8D
Grant	Power Equipment Operators	Loaders (overhead & Front-end, Over 8 Yds. To 10 Yds.)	$41.51	7B	1M	8D
Grant	Power Equipment Operators	Loaders (overhead & Front-end, Under 4 Yds.. R/t)	$40.80	7B	1M	8D
Grant	Power Equipment Operators	Loaders (overhead And Front-end, 10 Yds. & Over)	$42.61	7B	1M	8D
Grant	Power Equipment Operators	Locomotive Engineer	$40.64	7B	1M	8D
Grant	Power Equipment Operators	Longitudinal Float	$40.03	7B	1M	8D
Grant	Power Equipment Operators	Master Environmental Maintenance Technician	$41.51	7B	1M	8D
Grant	Power Equipment Operators	Mixer (portable - Concrete)	$40.03	7B	1M	8D
Grant	Power Equipment Operators	Mixermobile	$40.64	7B	1M	8D
Grant	Power Equipment Operators	Mobile Crusher Operator (recycle Train)	$41.24	7B	1M	8D
Grant	Power Equipment Operators	Mucking Machine	$40.64	7B	1M	8D
Grant	Power Equipment Operators	Multiple Dozer Units With Single Blade	$41.24	7B	1M	8D
Grant	Power Equipment Operators	Pavement Breaker, Hydra-hammer & Similar	$40.03	7B	1M	8D
Grant	Power Equipment Operators	Paving (dual Drum)	$40.96	7B	1M	8D
Grant	Power Equipment Operators	Paving Machine (asphalt And Concrete)	$41.24	7B	1M	8D
Grant	Power Equipment Operators	Piledriving Engineers	$40.96	7B	1M	8D
Grant	Power Equipment Operators	Plant Oiler	$39.71	7B	1M	8D
Grant	Power Equipment Operators	Posthole Auger Or Punch	$40.64	7B	1M	8D
Grant	Power Equipment Operators	Power Broom	$40.03	7B	1M	8D
Grant	Power Equipment Operators	Pump (grout Or Jet)	$40.64	7B	1M	8D
Grant	Power Equipment Operators	Pumpman	$39.71	7B	1M	8D

INFORMATIONAL COPY ONLY - NOT FOR BIDDING

Grant	Power Equipment Operators	Quad-track Or Similar Equipment	$41.24	7B	1M	8D
Grant	Power Equipment Operators	Railroad Ballast Regulation Operator (self-propelled)	$40.03	7B	1M	8D
Grant	Power Equipment Operators	Railroad Power Tamper Operator (self-propelled)	$40.03	7B	1M	8D
Grant	Power Equipment Operators	Railroad Tamper Jack Operator (self-propelled)	$40.03	7B	1M	8D
Grant	Power Equipment Operators	Railroad Track Liner Operator (self-propelled)	$40.96	7B	1M	8D
Grant	Power Equipment Operators	Refrigeration Plant Engineer (1000 Tons & Over)	$40.96	7B	1M	8D
Grant	Power Equipment Operators	Refrigeration Plant Engineer (under 1000 Ton)	$40.80	7B	1M	8D
Grant	Power Equipment Operators	Rollerman (finishing Asphalt Pavement)	$41.24	7B	1M	8D
Grant	Power Equipment Operators	Rollers, All Types On Subgrade, Including Seal And Chip Coating (farm Type, Case, John Deere And Similar,or Compacting Vibrator), Except When Pulled B	$39.71	7B	1M	8D
Grant	Power Equipment Operators	Roto Mill (pavement Grinder)	$41.24	7B	1M	8D
Grant	Power Equipment Operators	Rotomill Groundsman	$40.80	7B	1M	8D
Grant	Power Equipment Operators	Rubber-tired Scrapers (multiple Engine With Three Or More Scrapers)	$41.51	7B	1M	8D
Grant	Power Equipment Operators	Rubber-tired Skidders (r/t With Or Without Attachments)	$40.80	7B	1M	8D
Grant	Power Equipment Operators	Scrapers, All, Rubber-tired	$41.24	7B	1M	8D
Grant	Power Equipment Operators	Screed Operator	$41.24	7B	1M	8D
Grant	Power Equipment Operators	Shovels (3 Yds. & Over)	$41.51	7B	1M	8D
Grant	Power Equipment Operators	Shovels (under 3 Yds.)	$41.24	7B	1M	8D
Grant	Power Equipment Operators	Signalman (whirleys, Highline, Hammerheads Or Similar)	$40.96	7B	1M	8D
Grant	Power Equipment Operators	Soil Stabilizer (p & H Or Similar)	$40.64	7B	1M	8D
Grant	Power Equipment Operators	Spray Curing Machine (concrete)	$40.03	7B	1M	8D
Grant	Power Equipment Operators	Spreader Box (self-propelled)	$40.03	7B	1M	8D
Grant	Power Equipment Operators	Spreader Machine	$40.64	7B	1M	8D
Grant	Power Equipment Operators	Steam Cleaner	$39.71	7B	1M	8D
Grant	Power Equipment Operators	Straddle Buggy (ross & Similar On Construction Job Only)	$40.03	7B	1M	8D
Grant	Power Equipment Operators	Surface Heater & Planer Machine	$40.80	7B	1M	8D
Grant	Power Equipment Operators	Tractor (farm Type R/t With Attachments, Except Backhoe)	$40.03	7B	1M	8D
Grant	Power Equipment Operators	Traverse Finish Machine	$40.64	7B	1M	8D

INFORMATIONAL COPY ONLY - NOT FOR BIDDING

Grant	Power Equipment Operators	Trenching Machines (7 Ft. Depth & Over)	$41.24	7B	1M	8D
Grant	Power Equipment Operators	Trenching Machines (under 7 Ft. Depth Capacity)	$40.80	7B	1M	8D
Grant	Power Equipment Operators	Tug Boat Operator	$41.24	7B	1M	8D
Grant	Power Equipment Operators	Tugger Operator	$40.03	7B	1M	8D
Grant	Power Equipment Operators	Turnhead (with Re-screening)	$40.80	7B	1M	8D
Grant	Power Equipment Operators	Turnhead Operator	$40.64	7B	1M	8D
Grant	Power Equipment Operators	Ultra High Pressure Wateriet Cutting Tool System Operator, (30,000 Psi)	$41.51	7B	1M	8D
Grant	Power Equipment Operators	Vactor Guzzler, Super Sucker	$41.24	7B	1M	8D
Grant	Power Equipment Operators	Vacuum Blasting Machine Operator	$41.51	7B	1M	8D
Grant	Power Equipment Operators	Vacuum Drill (reverse Circulation Drill Under 8" Bit)	$40.80	7B	1M	8D
Grant	Power Equipment Operators	Welding Machine	$39.71	7B	1M	8D
Grant	Power Equipment Operators	Whirleys & Hammerheads, All	$41.51	7B	1M	8D
Grant	Power Equipment Operators-Underground Sewer & Water	A-frame Truck (2 Or More Drums)	$40.64	7B	1M	8D
Grant	Power Equipment Operators-Underground Sewer & Water	A-frame Truck (single Drum)	$40.03	7B	1M	8D
Grant	Power Equipment Operators-Underground Sewer & Water	Asphalt Plant Operator	$41.24	7B	1M	8D
Grant	Power Equipment Operators-Underground Sewer & Water	Assistant Plant Operator, Fireman Or Pugmixer (asphalt)	$40.03	7B	1M	8D
Grant	Power Equipment Operators-Underground Sewer & Water	Assistant Refrigeration Plant & Chiller Operator (over 1000 Ton)	$40.64	7B	1M	8D
Grant	Power Equipment Operators-Underground Sewer & Water	Assistant Refrigeration Plant (under 1000 Ton)	$40.03	7B	1M	8D
Grant	Power Equipment Operators-Underground Sewer & Water	Automatic Subgrader (ditches & Trimmers)	$41.24	7B	1M	8D
Grant	Power Equipment Operators-Underground Sewer & Water	Backfillers (cleveland & Similar)	$40.64	7B	1M	8D
Grant	Power Equipment Operators-Underground Sewer & Water	Backhoe & Hoe Ram (under 3/4 Yd.)	$40.96	7B	1M	8D
Grant	Power Equipment Operators-Underground Sewer & Water	Backhoe (45,000 Gw & Under)	$40.96	7B	1M	8D
Grant	Power Equipment Operators-Underground Sewer & Water	Backhoe (45,000 Gw To 110,000 Gw)	$41.24	7B	1M	8D
Grant	Power Equipment Operators-Underground Sewer & Water	Backhoe (over 110,000 Gw)	$41.51	7B	1M	8D
Grant	Power Equipment Operators-Underground Sewer & Water	Backhoes & Hoe Ram (3 Yds & Over)	$41.51	7B	1M	8D
Grant	Power Equipment Operators-Underground Sewer & Water	Backhoes & Hoe Ram (3/4 Yd. To 3 Yd.)	$41.24	7B	1M	8D
Grant	Power Equipment Operators-Underground Sewer & Water	Bagley Or Stationary Scraper	$40.03	7B	1M	8D
Grant			$41.24	7B	1M	8D

INFORMATIONAL COPY ONLY - NOT FOR BIDDING

	Power Equipment Operators-Underground Sewer & Water	Batch & Wet Mix Operator (multiple Units, 2 & Incl. 4)				
Grant	Power Equipment Operators-Underground Sewer & Water	Batch Plant & Wet Mix Operator, Single Unit (concrete)	$40.64	7B	1M	8D
Grant	Power Equipment Operators-Underground Sewer & Water	Batch Plant (over 4 Units)	$41.24	7B	1M	8D
Grant	Power Equipment Operators-Underground Sewer & Water	Belt Finishing Machine	$40.03	7B	1M	8D
Grant	Power Equipment Operators-Underground Sewer & Water	Belt Loader (kocal Or Similar)	$40.64	7B	1M	8D
Grant	Power Equipment Operators-Underground Sewer & Water	Belt-crete Conveyors With Power Pack Or Similar	$40.64	7B	1M	8D
Grant	Power Equipment Operators-Underground Sewer & Water	Bending Machine	$40.64	7B	1M	8D
Grant	Power Equipment Operators-Underground Sewer & Water	Bit Grinders	$39.71	7B	1M	8D
Grant	Power Equipment Operators-Underground Sewer & Water	Blade (finish & Bluetop), Automatic, Cmi, Abc, Finish Athey & Huber & Similar When Used As Automatic	$41.51	7B	1M	8D
Grant	Power Equipment Operators-Underground Sewer & Water	Blade Operator (motor Patrol & Attachments)	$41.24	7B	1M	8D
Grant	Power Equipment Operators-Underground Sewer & Water	Blower Operator (cement)	$40.03	7B	1M	8D
Grant	Power Equipment Operators-Underground Sewer & Water	Boat Operator	$39.71	7B	1M	8D
Grant	Power Equipment Operators-Underground Sewer & Water	Bob Cat (skid Steer)	$40.64	7B	1M	8D
Grant	Power Equipment Operators-Underground Sewer & Water	Bolt Threading Machine	$39.71	7B	1M	8D
Grant	Power Equipment Operators-Underground Sewer & Water	Boom Cats (side)	$41.24	7B	1M	8D
Grant	Power Equipment Operators-Underground Sewer & Water	Boring Machine (earth)	$40.64	7B	1M	8D
Grant	Power Equipment Operators-Underground Sewer & Water	Boring Machine (Rock Under 8 inch Bit - Quarry Master, Joy Or Similar)	$40.64	7B	1M	8D
Grant	Power Equipment Operators-Underground Sewer & Water	Bump Cutter (wayne, Saginau Or Similar)	$40.64	7B	1M	8D
Grant	Power Equipment Operators-Underground Sewer & Water	Cableway Controller (dispatcher)	$41.24	7B	1M	8D
Grant	Power Equipment Operators-Underground Sewer & Water	Cableway Operators	$41.51	7B	1M	8D
Grant	Power Equipment Operators-Underground Sewer & Water	Canal Lining Machine (concrete)	$40.64	7B	1M	8D
Grant	Power Equipment Operators-Underground Sewer & Water	Carrydeck & Boom Truck (under 25 Tons)	$40.96	7B	1M	8D
Grant	Power Equipment Operators-Underground Sewer & Water	Cement Hog	$40.03	7B	1M	8D
Grant	Power Equipment Operators-Underground Sewer & Water		$40.64	7B	1M	8D

INFORMATIONAL COPY ONLY - NOT FOR BIDDING

		Chipper (without Crane) Cleaning & Doping Machine (pipeline)				
Grant	Power Equipment Operators-Underground Sewer & Water	Clamshell, Dragline	$42.61	7B	1M	8D
Grant	Power Equipment Operators-Underground Sewer & Water	Compactor (self-propelled With Blade)	$41.24	7B	1M	8D
Grant	Power Equipment Operators-Underground Sewer & Water	Compressor (2000 Cfm Or Over, 2 Or More, Gas Diesel Or Electric Power)	$40.03	7B	1M	8D
Grant	Power Equipment Operators-Underground Sewer & Water	Compressors (under 2000 Cfm, Gas, Diesel Or Electric Power)	$39.71	7B	1M	8D
Grant	Power Equipment Operators-Underground Sewer & Water	Concrete Cleaning / Decontamination Machine Operator	$41.51	7B	1M	8D
Grant	Power Equipment Operators-Underground Sewer & Water	Concrete Pump Boon Truck	$41.24	7B	1M	8D
Grant	Power Equipment Operators-Underground Sewer & Water	Concrete Pumps (squeeze-crete, Flow-crete, Whitman & Similar)	$40.80	7B	1M	8D
Grant	Power Equipment Operators-Underground Sewer & Water	Concrete Saw (multiple Cut)	$40.03	7B	1M	8D
Grant	Power Equipment Operators-Underground Sewer & Water	Concrete Slip Form Paver	$41.24	7B	1M	8D
Grant	Power Equipment Operators-Underground Sewer & Water	Conveyor Aggregate Delivery Systems (c.a.d.)	$41.24	7B	1M	8D
Grant	Power Equipment Operators-Underground Sewer & Water	Crane Oiler- Driver (cdl Required) & Cable Tender, Mucking Machine	$39.71	7B	1M	8D
Grant	Power Equipment Operators-Underground Sewer & Water	Cranes (25 Tons & Under), All Attachments Incl. Clamshell, Dragline	$40.96	7B	1M	8D
Grant	Power Equipment Operators-Underground Sewer & Water	Cranes (25 Tons To And Including 45 Tons), All Attachments Incl. Clamshell, Dragline	$41.24	7B	1M	8D
Grant	Power Equipment Operators-Underground Sewer & Water	Cranes (45 Tons To 85 Tons), All Attachments Incl. Clamshell And Dragline	$41.51	7B	1M	8D
Grant	Power Equipment Operators-Underground Sewer & Water	Cranes (85 Tons & Over) And All Climbing, Overhead, Rail & Tower. All Attachments Incl.	$42.61	7B	1M	8D
Grant	Power Equipment Operators-Underground Sewer & Water	Crusher Feeder	$39.71	7B	1M	8D
Grant	Power Equipment Operators-Underground Sewer & Water	Crusher, Grizzle & Screening Plant Operator	$41.24	7B	1M	8D
Grant	Power Equipment Operators-Underground Sewer & Water	Curb Extruder (asphalt Or Concrete)	$40.80	7B	1M	8D
Grant	Power Equipment Operators-Underground Sewer & Water	Deck Engineer	$40.64	7B	1M	8D
Grant	Power Equipment Operators-Underground Sewer & Water	Deck Hand	$39.71	7B	1M	8D

INFORMATIONAL COPY ONLY - NOT FOR BIDDING

Grant	Power Equipment Operators-Underground Sewer & Water	Derricks & Stifflegs (65 Tons & Over)	$41.51	7B	1M	8D
Grant	Power Equipment Operators-Underground Sewer & Water	Derricks & Stifflegs (under 65 Tons)	$40.96	7B	1M	8D
Grant	Power Equipment Operators-Underground Sewer & Water	Distributor Leverman	$40.03	7B	1M	8D
Grant	Power Equipment Operators-Underground Sewer & Water	Ditch Witch Or Similar	$40.03	7B	1M	8D
Grant	Power Equipment Operators-Underground Sewer & Water	Dope Pots (power Agitated	$40.03	7B	1M	8D
Grant	Power Equipment Operators-Underground Sewer & Water	Dozer / Tractor (up To D-6 Or Equivalent) And Traxcavator	$40.64	7B	1M	8D
Grant	Power Equipment Operators-Underground Sewer & Water	Dozer / Tractors (d-6 & Equivalent & Over)	$41.24	7B	1M	8D
Grant	Power Equipment Operators-Underground Sewer & Water	Dozer, 834 R/t & Similar	$41.24	7B	1M	8D
Grant	Power Equipment Operators-Underground Sewer & Water	Drill Doctor	$41.24	7B	1M	8D
Grant	Power Equipment Operators-Underground Sewer & Water	Driller Licensed	$42.61	7B	1M	8D
Grant	Power Equipment Operators-Underground Sewer & Water	Drillers Helper	$39.71	7B	1M	8D
Grant	Power Equipment Operators-Underground Sewer & Water	Drilling Equipment (8 inch Bit & Over - Robbins, Reverse Circulation & Similar)	$40.96	7B	1M	8D
Grant	Power Equipment Operators-Underground Sewer & Water	Drills (churn, Core, Calyx Or Diamond)	$40.80	7B	1M	8D
Grant	Power Equipment Operators-Underground Sewer & Water	Elevating Belt (holland Type)	$41.51	7B	1M	8D
Grant	Power Equipment Operators-Underground Sewer & Water	Elevating Belt-type Loader (euclid, Barber Green & Similar)	$40.64	7B	1M	8D
Grant	Power Equipment Operators-Underground Sewer & Water	Elevating Grader-type Loader (dumor, Adams Or Similar)	$40.64	7B	1M	8D
Grant	Power Equipment Operators-Underground Sewer & Water	Elevator Hoisting Materials	$40.03	7B	1M	8D
Grant	Power Equipment Operators-Underground Sewer & Water	Equipment Serviceman, Greaser & Oiler	$40.80	7B	1M	8D
Grant	Power Equipment Operators-Underground Sewer & Water	Fireman & Heater Tender	$39.71	7B	1M	8D
Grant	Power Equipment Operators-Underground Sewer & Water	Fork Lift Or Lumber Stacker, Hydra-life & Similar	$40.03	7B	1M	8D
Grant	Power Equipment Operators-Underground Sewer & Water	Generator Plant Engineers (diesel Or Electric)	$40.64	7B	1M	8D
Grant	Power Equipment Operators-Underground Sewer & Water	Gin Trucks (pipeline)	$40.03	7B	1M	8D
Grant	Power Equipment Operators-Underground Sewer & Water	Grade Checker	$40.96	7B	1M	8D
Grant	Power Equipment Operators-Underground Sewer & Water	Gunite Combination Mixer & Compressor	$40.64	7B	1M	8D
Grant		H.d. Mechanic	$41.51	7B	1M	8D

INFORMATIONAL COPY ONLY - NOT FOR BIDDING

	Power Equipment Operators-Underground Sewer & Water					
Grant	Power Equipment Operators-Underground Sewer & Water	H.d. Welder	$41.51	7B	1M	8D
Grant	Power Equipment Operators-Underground Sewer & Water	Heavy Equipment Robotics Operator	$41.51	7B	1M	8D
Grant	Power Equipment Operators-Underground Sewer & Water	Helicopter Pilot	$42.61	7B	1M	8D
Grant	Power Equipment Operators-Underground Sewer & Water	Helper, Mechanic Or Welder, H.D	$39.71	7B	1M	8D
Grant	Power Equipment Operators-Underground Sewer & Water	Hoe Ram	$40.96	7B	1M	8D
Grant	Power Equipment Operators-Underground Sewer & Water	Hoist (2 Or More Drums Or Tower Hoist)	$40.80	7B	1M	8D
Grant	Power Equipment Operators-Underground Sewer & Water	Hoist, Single Drum	$40.03	7B	1M	8D
Grant	Power Equipment Operators-Underground Sewer & Water	Hydraulic Platform Trailers (goldhofer, Shaurerly And Similar)	$41.51	7B	1M	8D
Grant	Power Equipment Operators-Underground Sewer & Water	Hydro-seeder, Mulcher, Nozzleman	$39.71	7B	1M	8D
Grant	Power Equipment Operators-Underground Sewer & Water	Lime Batch Tank Operator (recycle Train)	$41.24	7B	1M	8D
Grant	Power Equipment Operators-Underground Sewer & Water	Lime Brain Operator (recycle Train)	$41.24	7B	1M	8D
Grant	Power Equipment Operators-Underground Sewer & Water	Loader (360 Degrees Revolving Koehring Scooper Or Similar)	$41.51	7B	1M	8D
Grant	Power Equipment Operators-Underground Sewer & Water	Loader Operator (front-end & Overhead, 4 Yds. Incl. 8 Yds.)	$41.24	7B	1M	8D
Grant	Power Equipment Operators-Underground Sewer & Water	Loaders (bucket Elevators And Conveyors)	$40.03	7B	1M	8D
Grant	Power Equipment Operators-Underground Sewer & Water	Loaders (overhead & Front-end, Over 8 Yds. To 10 Yds.)	$41.51	7B	1M	8D
Grant	Power Equipment Operators-Underground Sewer & Water	Loaders (overhead & Front-end, Under 4 Yds.. R/t)	$40.80	7B	1M	8D
Grant	Power Equipment Operators-Underground Sewer & Water	Loaders (overhead And Front-end, 10 Yds. & Over)	$42.61	7B	1M	8D
Grant	Power Equipment Operators-Underground Sewer & Water	Locomotive Engineer	$40.64	7B	1M	8D
Grant	Power Equipment Operators-Underground Sewer & Water	Longitudinal Float	$40.03	7B	1M	8D
Grant	Power Equipment Operators-Underground Sewer & Water	Master Environmental Maintenance Technician	$41.51	7B	1M	8D
Grant	Power Equipment Operators-Underground Sewer & Water	Mixer (portable - Concrete)	$40.03	7B	1M	8D
Grant	Power Equipment Operators-Underground Sewer & Water	Mixermobile	$40.64	7B	1M	8D
Grant	Power Equipment Operators-Underground Sewer & Water	Mobile Crusher Operator (recycle Train)	$41.24	7B	1M	8D
Grant	Power Equipment Operators-Underground Sewer & Water	Mucking Machine	$40.64	7B	1M	8D

INFORMATIONAL COPY ONLY - NOT FOR BIDDING

Grant	Power Equipment Operators-Underground Sewer & Water	Multiple Dozer Units With Single Blade	$41.24	7B	1M	8D
Grant	Power Equipment Operators-Underground Sewer & Water	Pavement Breaker, Hydra-hammer & Similar	$40.03	7B	1M	8D
Grant	Power Equipment Operators-Underground Sewer & Water	Paving (dual Drum)	$40.96	7B	1M	8D
Grant	Power Equipment Operators-Underground Sewer & Water	Paving Machine (asphalt And Concrete)	$41.24	7B	1M	8D
Grant	Power Equipment Operators-Underground Sewer & Water	Piledriving Engineers	$40.96	7B	1M	8D
Grant	Power Equipment Operators-Underground Sewer & Water	Plant Oiler	$39.71	7B	1M	8D
Grant	Power Equipment Operators-Underground Sewer & Water	Posthole Auger Or Punch	$40.64	7B	1M	8D
Grant	Power Equipment Operators-Underground Sewer & Water	Power Broom	$40.03	7B	1M	8D
Grant	Power Equipment Operators-Underground Sewer & Water	Pump (grout Or Jet)	$40.64	7B	1M	8D
Grant	Power Equipment Operators-Underground Sewer & Water	Pumpman	$39.71	7B	1M	8D
Grant	Power Equipment Operators-Underground Sewer & Water	Quad-track Or Similar Equipment	$41.24	7B	1M	8D
Grant	Power Equipment Operators-Underground Sewer & Water	Railroad Ballast Regulation Operator (self-propelled)	$40.03	7B	1M	8D
Grant	Power Equipment Operators-Underground Sewer & Water	Railroad Power Tamper Operator (self-propelled)	$40.03	7B	1M	8D
Grant	Power Equipment Operators-Underground Sewer & Water	Railroad Tamper Jack Operator (self-propelled)	$40.03	7B	1M	8D
Grant	Power Equipment Operators-Underground Sewer & Water	Railroad Track Liner Operator (self-propelled)	$40.96	7B	1M	8D
Grant	Power Equipment Operators-Underground Sewer & Water	Refrigeration Plant Engineer (1000 Tons & Over)	$40.96	7B	1M	8D
Grant	Power Equipment Operators-Underground Sewer & Water	Refrigeration Plant Engineer (under 1000 Ton)	$40.80	7B	1M	8D
Grant	Power Equipment Operators-Underground Sewer & Water	Rollerman (finishing Asphalt Pavement)	$41.24	7B	1M	8D
Grant	Power Equipment Operators-Underground Sewer & Water	Rollers, All Types On Subgrade, Including Seal And Chip Coating (farm Type, Case, John Deere And Similar,or Compacting Vibrator), Except When Pulled B	$39.71	7B	1M	8D
Grant	Power Equipment Operators-Underground Sewer & Water	Roto Mill (pavement Grinder)	$41.24	7B	1M	8D
Grant	Power Equipment Operators-Underground Sewer & Water	Rotomill Groundsman	$40.80	7B	1M	8D
Grant	Power Equipment Operators-Underground Sewer & Water	Rubber-tired Scrapers (multiple Engine With Three Or More Scrapers)	$41.51	7B	1M	8D
Grant	Power Equipment Operators-Underground Sewer & Water	Rubber-tired Skidders (r/t With Or Without Attachments)	$40.80	7B	1M	8D

INFORMATIONAL COPY ONLY - NOT FOR BIDDING

Grant	Power Equipment Operators-Underground Sewer & Water	Scrapers, All, Rubber-tired	$41.24	7B	1M	8D
Grant	Power Equipment Operators-Underground Sewer & Water	Screed Operator	$41.24	7B	1M	8D
Grant	Power Equipment Operators-Underground Sewer & Water	Shovels (3 Yds. & Over)	$41.51	7B	1M	8D
Grant	Power Equipment Operators-Underground Sewer & Water	Shovels (under 3 Yds.)	$41.24	7B	1M	8D
Grant	Power Equipment Operators-Underground Sewer & Water	Signalman (whirleys, Highline, Hammerheads Or Similar)	$40.96	7B	1M	8D
Grant	Power Equipment Operators-Underground Sewer & Water	Soil Stabilizer (p & H Or Similar)	$40.64	7B	1M	8D
Grant	Power Equipment Operators-Underground Sewer & Water	Spray Curing Machine (concrete)	$40.03	7B	1M	8D
Grant	Power Equipment Operators-Underground Sewer & Water	Spreader Box (self-propelled)	$40.03	7B	1M	8D
Grant	Power Equipment Operators-Underground Sewer & Water	Spreader Machine	$40.64	7B	1M	8D
Grant	Power Equipment Operators-Underground Sewer & Water	Steam Cleaner	$39.71	7B	1M	8D
Grant	Power Equipment Operators-Underground Sewer & Water	Straddle Buggy (ross & Similar On Construction Job Only)	$40.03	7B	1M	8D
Grant	Power Equipment Operators-Underground Sewer & Water	Surface Heater & Planer Machine	$40.80	7B	1M	8D
Grant	Power Equipment Operators-Underground Sewer & Water	Tractor (farm Type R/t With Attachments, Except Backhoe)	$40.03	7B	1M	8D
Grant	Power Equipment Operators-Underground Sewer & Water	Traverse Finish Machine	$40.64	7B	1M	8D
Grant	Power Equipment Operators-Underground Sewer & Water	Trenching Machines (7 Ft. Depth & Over)	$41.24	7B	1M	8D
Grant	Power Equipment Operators-Underground Sewer & Water	Trenching Machines (under 7 Ft. Depth Capacity)	$40.80	7B	1M	8D
Grant	Power Equipment Operators-Underground Sewer & Water	Tug Boat Operator	$41.24	7B	1M	8D
Grant	Power Equipment Operators-Underground Sewer & Water	Tugger Operator	$40.03	7B	1M	8D
Grant	Power Equipment Operators-Underground Sewer & Water	Turnhead (with Re-screening)	$40.80	7B	1M	8D
Grant	Power Equipment Operators-Underground Sewer & Water	Turnhead Operator	$40.64	7B	1M	8D
Grant	Power Equipment Operators-Underground Sewer & Water	Ultra High Pressure Wateriet Cutting Tool System Operator, (30,000 Psi)	$41.51	7B	1M	8D
Grant	Power Equipment Operators-Underground Sewer & Water	Vactor Guzzler, Super Sucker	$41.24	7B	1M	8D
Grant	Power Equipment Operators-Underground Sewer & Water	Vacuum Blasting Machine Operator	$41.51	7B	1M	8D
Grant	Power Equipment Operators-Underground Sewer & Water	Vacuum Drill (reverse Circulation Drill Under 8" Bit)	$40.80	7B	1M	8D
Grant	Power Equipment Operators-Underground Sewer & Water	Welding Machine	$39.71	7B	1M	8D

INFORMATIONAL COPY ONLY - NOT FOR BIDDING

Grant	Power Equipment Operators-Underground Sewer & Water	Whirleys & Hammerheads, All	$41.51	7B	1M	8D
Grant	Power Line Clearance Tree Trimmers	Journey Level In Charge	$45.75	5A	4A	
Grant	Power Line Clearance Tree Trimmers	Spray Person	$43.38	5A	4A	
Grant	Power Line Clearance Tree Trimmers	Tree Equipment Operator	$45.75	5A	4A	
Grant	Power Line Clearance Tree Trimmers	Tree Trimmer	$40.84	5A	4A	
Grant	Power Line Clearance Tree Trimmers	Tree Trimmer Groundperson	$30.74	5A	4A	
Grant	Refrigeration & Air Conditioning Mechanics	Journey Level	$27.67		1	
Grant	Residential Brick Mason	Journey Level	$44.94	5A	1M	
Grant	Residential Carpenters	Journey Level	$13.86		1	
Grant	Residential Cement Masons	Journey Level	$9.50		1	
Grant	Residential Drywall Applicators	Journey Level	$17.49		1	
Grant	Residential Drywall Tapers	Journey Level	$14.00		1	
Grant	Residential Electricians	Journey Level	$22.95		1	
Grant	Residential Glaziers	Journey Level	$13.80		1	
Grant	Residential Insulation Applicators	Journey Level	$10.00		1	
Grant	Residential Laborers	Journey Level	$11.10		1	
Grant	Residential Marble Setters	Journey Level	$44.94	5A	1M	
Grant	Residential Painters	Journey Level	$13.52		1	
Grant	Residential Plumbers & Pipefitters	Journey Level	$21.17		1	
Grant	Residential Refrigeration & Air Conditioning Mechanics	Journey Level	$21.17		1	
Grant	Residential Sheet Metal Workers	Journey Level (Field or Shop)	$26.53		1	
Grant	Residential Soft Floor Layers	Journey Level	$22.77		1	
Grant	Residential Sprinkler Fitters (Fire Protection)	Journey Level	$16.84		1	
Grant	Residential Stone Masons	Journey Level	$44.94	5A	1M	
Grant	Residential Terrazzo Workers	Journey Level	$9.47		1	
Grant	Residential Terrazzo/Tile Finishers	Journey Level	$17.00		1	
Grant	Residential Tile Setters	Journey Level	$9.47		1	
Grant	Roofers	Journey Level	$26.11		1	
Grant	Sheet Metal Workers	Journey Level (Field or Shop)	$50.21	6Z	1B	
Grant	Sign Makers & Installers (Electrical)	Journey Level	$59.42	7F	1E	
Grant	Sign Makers & Installers (Non-Electrical)	Journey Level	$14.65		1	
Grant	Soft Floor Layers	Journey Level	$22.77		1	
Grant	Solar Controls For Windows	Journey Level	$9.47		1	

INFORMATIONAL COPY ONLY - NOT FOR BIDDING

Grant	Sprinkler Fitters (Fire Protection)	Journey Level	$50.95	7J	1R	
Grant	Stage Rigging Mechanics (Non Structural)	Journey Level	$13.23		1	
Grant	Stone Masons	Journey Level	$44.94	5A	1M	
Grant	Street And Parking Lot Sweeper Workers	Journey Level	$14.00		1	
Grant	Surveyors	All Classifications	$28.57	Null	1	
Grant	Telecommunication Technicians	Journey Level	$17.65		1	
Grant	Telephone Line Construction - Outside	Cable Splicer	$37.60	5A	2B	
Grant	Telephone Line Construction - Outside	Hole Digger/Ground Person	$20.79	5A	2B	
Grant	Telephone Line Construction - Outside	Installer (Repairer)	$36.02	5A	2B	
Grant	Telephone Line Construction - Outside	Special Aparatus Installer I	$37.60	5A	2B	
Grant	Telephone Line Construction - Outside	Special Apparatus Installer II	$36.82	5A	2B	
Grant	Telephone Line Construction - Outside	Telephone Equipment Operator (Heavy)	$37.60	5A	2B	
Grant	Telephone Line Construction - Outside	Telephone Equipment Operator (Light)	$34.94	5A	2B	
Grant	Telephone Line Construction - Outside	Telephone Lineperson	$34.93	5A	2B	
Grant	Telephone Line Construction - Outside	Television Groundperson	$19.73	5A	2B	
Grant	Telephone Line Construction - Outside	Television Lineperson/Installer	$26.31	5A	2B	
Grant	Telephone Line Construction - Outside	Television System Technician	$31.50	5A	2B	
Grant	Telephone Line Construction - Outside	Television Technician	$28.23	5A	2B	
Grant	Telephone Line Construction - Outside	Tree Trimmer	$34.93	5A	2B	
Grant	Terrazzo Workers	Journey Level	$38.14	5A	1M	
Grant	Tile Setters	Journey Level	$38.14	5A	1M	
Grant	Tile, Marble & Terrazzo Finishers	Journey Level	$30.90	5A	1M	
Grant	Traffic Control Stripers	Journey Level	$43.73	7A	1K	
Grant	Truck Drivers	Dump Truck	$26.09		1	
Grant	Truck Drivers	Dump Truck And Trailer	$26.09		1	
Grant	Truck Drivers	Other Trucks	$27.84		1	
Grant	Truck Drivers	Transit Mixer	$10.00		1	
Grant	Well Drillers & Irrigation Pump Installers	Irrigation Pump Installer	$13.61		1	
Grant	Well Drillers & Irrigation Pump Installers	Oiler	$9.47		1	
Grant		Well Driller	$18.00		1	

INFORMATIONAL COPY ONLY - NOT FOR BIDDING

	Well Drillers & Irrigation Pump Installers					

INFORMATIONAL COPY ONLY - NOT FOR BIDDING

Washington State Department of Labor and Industries
Policy Statement
(Regarding the Production of "Standard" or "Non-standard" Items)

Below is the department's (State L&I's) list of criteria to be used in determining whether a prefabricated item is "standard" or "non-standard". For items not appearing on WSDOT's predetermined list, these criteria shall be used by the Contractor (and the Contractor's subcontractors, agents to subcontractors, suppliers, manufacturers, and fabricators) to determine coverage under RCW 39.12. The production, in the State of Washington, of non-standard items is covered by RCW 39.12, and the production of standard items is not. The production of any item outside the State of Washington is not covered by RCW 39.12.

1. Is the item fabricated for a public works project? If not, it is not subject to RCW 39.12. If it is, go to question 2.

2. Is the item fabricated on the public works jobsite? If it is, the work is covered under RCW 39.12. If not, go to question 3.

3. Is the item fabricated in an assembly/fabrication plant set up for, and dedicated primarily to, the public works project? If it is, the work is covered by RCW 39.12. If not, go to question 4.

4. Does the item require any assembly, cutting, modification or other fabrication by the supplier? If not, the work is not covered by RCW 39.12. If yes, go to question 5.

5. Is the prefabricated item intended for the public works project typically an inventory item which could reasonably be sold on the general market? If not, the work is covered by RCW 39.12. If yes, go to question 6.

6. Does the specific prefabricated item, generally defined as standard, have any unusual characteristics such as shape, type of material, strength requirements, finish, etc? If yes, the work is covered under RCW 39.12.

Any firm with questions regarding the policy, WSDOT's Predetermined List, or for determinations of covered and non-covered workers shall be directed to State L&I at (360) 902-5330.

INFORMATIONAL COPY ONLY - NOT FOR BIDDING

WSDOT's
Predetermined List for
Suppliers - Manufactures - Fabricator

Below is a list of potentially prefabricated items, originally furnished by WSDOT to Washington State Department of Labor and Industries, that may be considered non-standard and therefore covered by the prevailing wage law, RCW 39.12. Items marked with an X in the "YES" column should be considered to be non-standard and therefore covered by RCW 39.12. Items marked with an X in the "NO" column should be considered to be standard and therefore not covered. Of course, exceptions to this general list may occur, and in that case shall be evaluated according to the criteria described in State and L&I's policy statement.

	ITEM DESCRIPTION	YES	NO
1.	Metal rectangular frames, solid metal covers, herringbone grates, and bi-directional vaned grates for Catch Basin Types 1, 1L, 1P, and 2 and Concrete Inlets. See Std. Plans		X
2.	Metal circular frames (rings) and covers, circular grates, and prefabricated ladders for Manhole Types 1, 2, and 3, Drywell Types 1, 2, and 3 and Catch Basin Type 2. See Std. Plans		X
3.	Prefabricated steel grate supports and welded grates, metal frames and dual vaned grates, and Type 1, 2, and 3 structural tubing grates for Drop Inlets. See Std. Plans.		X
4.	Concrete Pipe - Plain Concrete pipe and reinforced concrete pipe Class 2 to 5 sizes smaller than 60 inch diameter.		X
5.	Concrete Pipe - Plain Concrete pipe and reinforced concrete pipe Class 2 to 5 sizes larger than 60 inch diameter.		X
6.	Corrugated Steel Pipe - Steel lock seam corrugated pipe for culverts and storm sewers, sizes 30 inch to 120 inches in diameter. May also be treated, 1 thru 5.		X
7.	Corrugated Aluminum Pipe - Aluminum lock seam corrugated pipe for culverts and storm sewers, sizes 30 inch to 120 inches in diameter. May also be treated, #5.		X

INFORMATIONAL COPY ONLY - NOT FOR BIDDING

	ITEM DESCRIPTION	YES	NO
8.	Anchor Bolts & Nuts - Anchor Bolts and Nuts, for mounting sign structures, luminaries and other items, shall be made from commercial bolt stock. See Contract Plans and Std. Plans for size and material type.		X
9.	Aluminum Pedestrian Handrail - Pedestrian handrail conforming to the type and material specifications set forth in the contract plans. Welding of aluminum shall be in accordance with Section 9-28.14(3).	X	
10.	Major Structural Steel Fabrication - Fabrication of major steel items such as trusses, beams, girders, etc., for bridges.	X	
11.	Minor Structural Steel Fabrication - Fabrication of minor steel Items such as special hangers, brackets, access doors for structures, access ladders for irrigation boxes, bridge expansion joint systems, etc., involving welding, cutting, punching and/or boring of holes. See Contact Plans for item description and shop drawings.	X	
12.	Aluminum Bridge Railing Type BP - Metal bridge railing conforming to the type and material specifications set forth in the Contract Plans. Welding of aluminum shall be in accordance with Section 9-28.14(3).		X
13.	Concrete Piling--Precast-Prestressed concrete piling for use as 55 and 70 ton concrete piling. Concrete to conform to Section 9-19.1 of Std. Spec..	X	
14.	Precast Manhole Types 1, 2, and 3 with cones, adjustment sections and flat top slabs. See Std. Plans.		X
15.	Precast Drywell Types 1, 2, and with cones and adjustment Sections. See Std. Plans.		X
16.	Precast Catch Basin - Catch Basin type 1, 1L, 1P, and 2 With adjustment sections. See Std. Plans.		X

INFORMATIONAL COPY ONLY-NOT FOR BIDDING

	ITEM DESCRIPTION	YES	NO
17.	Precast Concrete Inlet - with adjustment sections, See Std. Plans		X
18.	Precast Drop Inlet Type 1 and 2 with metal grate supports. See Std. Plans.		X
19.	Precast Grate Inlet Type 2 with extension and top units. See Std. Plans		X
20.	Metal frames, vaned grates, and hoods for Combination Inlets. See Std. Plans		X
21.	Precast Concrete Utility Vaults - Precast Concrete utility vaults of various sizes. Used for in ground storage of utility facilities and controls. See Contract Plans for size and construction requirements. Shop drawings are to be provided for approval prior to casting		X
22.	Vault Risers - For use with Valve Vaults and Utilities Vaults.		X
23.	Valve Vault - For use with underground utilities. See Contract Plans for details.		X
24.	Precast Concrete Barrier - Precast Concrete Barrier for use as new barrier or may also be used as Temporary Concrete Barrier. Only new state approved barrier may be used as permanent barrier.		X
25.	Reinforced Earth Wall Panels – Reinforced Earth Wall Panels in size and shape as shown in the Plans. Fabrication plant has annual approval for methods and materials to be used. See Shop Drawing. Fabrication at other locations may be approved, after facilities inspection, contact HQ. Lab.	X	
26.	Precast Concrete Walls - Precast Concrete Walls - tilt-up wall panel in size and shape as shown in Plans. Fabrication plant has annual approval for methods and materials to be used	X	

INFORMATIONAL COPY ONLY - NOT FOR BIDDING

	ITEM DESCRIPTION	YES	NO
27.	Precast Railroad Crossings - Concrete Crossing Structure Slabs.	X	
28.	12, 18 and 26 inch Standard Precast Prestressed Girder – Standard Precast Prestressed Girder for use in structures. Fabricator plant has annual approval of methods and materials to be used. Shop Drawing to be provided for approval prior to casting girders. See Std. Spec. Section 6-02.3(25)A	X	
29.	Prestressed Concrete Girder Series 4-14 - Prestressed Concrete Girders for use in structures. Fabricator plant has annual approval of methods and materials to be used. Shop Drawing to be provided for approval prior to casting girders. See Std. Spec. Section 6-02.3(25)A .	X	
30.	Prestressed Tri-Beam Girder - Prestressed Tri-Beam Girders for use in structures. Fabricator plant has annual approval of methods and materials to be used. Shop Drawing to be provided for approval prior to casting girders. See Std. Spec. Section 6-02.3(25)A	X	
31.	Prestressed Precast Hollow-Core Slab – Precast Prestressed Hollow-core slab for use in structures. Fabricator plant has annual approval of methods and materials to be used. Shop Drawing to be provided for approval prior to casting girders. See Std. Spec. Section 6-02.3(25)A.	X	
32.	Prestressed-Bulb Tee Girder - Bulb Tee Prestressed Girder for use in structures. Fabricator plant has annual approval of methods and materials to be used. Shop Drawing to be provided for approval prior to casting girders. See Std. Spec. Section 6-02.3(25)A	X	
33.	Monument Case and Cover See Std. Plan.		X

INFORMATIONAL COPY ONLY - NOT FOR BIDDING

	ITEM DESCRIPTION	YES	NO
34.	Cantilever Sign Structure - Cantilever Sign Structure fabricated from steel tubing meeting AASHTO-M-183. See Std. Plans, and Contract Plans for details. The steel structure shall be galvanized after fabrication in accordance with AASHTO-M-111.	X	
35.	Mono-tube Sign Structures - Mono-tube Sign Bridge fabricated to details shown in the Plans. Shop drawings for approval are required prior to fabrication.	X	
36.	Steel Sign Bridges - Steel Sign Bridges fabricated from steel tubing meeting AASHTO-M-138 for Aluminum Alloys. See Std. Plans, and Contract Plans for details. The steel structure shall be galvanized after fabrication in accordance with AASHTO-M-111.	X	
37.	Steel Sign Post - Fabricated Steel Sign Posts as detailed in Std Plans. Shop drawings for approval are to be provided prior to fabrication		X
38.	Light Standard-Prestressed - Spun, prestressed, hollow concrete poles.	X	
39.	Light Standards - Lighting Standards for use on highway illumination systems, poles to be fabricated to conform with methods and materials as specified on Std. Plans. See Specia Provisions for pre-approved drawings.	X	
40.	Traffic Signal Standards - Traffic Signal Standards for use on highway and/or street signal systems. Standards to be fabricated to conform with methods and material as specified on Std. Plans. See Special Provisions for pre-approved drawings	X	
41.	Precast Concrete Sloped Mountable Curb (Single and DualFaced) See Std. Plans.		X

INFORMATIONAL COPY ONLY - NOT FOR BIDDING

	ITEM DESCRIPTION	YES	NO
42.	Traffic Signs - Prior to approval of a Fabricator of Traffic Signs, the sources of the following materials must be submitted and approved for reflective sheeting, legend material, and aluminum sheeting. **NOTE:** *** Fabrication inspection required. Only signs tagged "Fabrication Approved" by WSDOT Sign Fabrication Inspector to be installed	X	X
		Custom Message	Std Signing Message
43.	Cutting & bending reinforcing steel		X
44.	Guardrail components	X	X
		Custom End Sec	Standard Sec
45.	Aggregates/Concrete mixes	Covered by WAC 296-127-018	
46.	Asphalt	Covered by WAC 296-127-018	
47.	Fiber fabrics		X
48.	Electrical wiring/components		X
49.	treated or untreated timber pile		X
50.	Girder pads (elastomeric bearing)	X	
51.	Standard Dimension lumber		X
52.	Irrigation components		X

INFORMATIONAL COPY ONLY - NOT FOR BIDDING

ITEM DESCRIPTION	YES	NO
53. Fencing materials		X
54. Guide Posts		X
55. Traffic Buttons		X
56. Epoxy		X
57. Cribbing		X
58. Water distribution materials		X
59. Steel "H" piles		X
60. Steel pipe for concrete pile casings		X
61. Steel pile tips, standard		X
62. Steel pile tips, custom	X	

Prefabricated items specifically produced for public works projects that are prefabricated in a county other than the county wherein the public works project is to be completed, the wage for the offsite prefabrication shall be the applicable prevailing wage for the county in which the actual prefabrication takes place.

It is the manufacturer of the prefabricated product to verify that the correct county wage rates are applied to work they perform.

See RCW 39.12.010
(The definition of "locality" in RCW 39.12.010(2) contains the phrase "wherein the physical work is being performed." The department interprets this phrase to mean the actual work site.

INFORMATIONAL COPY ONLY - NOT FOR BIDDING

WSDOT's List of State Occupations not applicable to Heavy and Highway Construction Projects

This project is subject to the state hourly minimum rates for wages and fringe benefits in the contract provisions, as provided by the state Department of Labor and Industries.
The following list of occupations, is comprised of those occupations that are not normally used in the construction of heavy and highway projects.
When considering job classifications for use and / or payment when bidding on, or building heavy and highway construction projects for, or administered by WSDOT, these Occupations will be excepted from the included "Washington State Prevailing Wage Rates For Public Work Contracts" documents.

- Building Service Employees
- Electrical Fixture Maintenance Workers
- Electricians - Motor Shop
- Heating Equipment Mechanics
- Industrial Engine and Machine Mechanics
- Industrial Power Vacuum Cleaners
- Inspection, Cleaning, Sealing of Water Systems by Remote Control
- Laborers - Underground Sewer & Water
- Machinists (Hydroelectric Site Work)
- Modular Buildings
- Playground & Park Equipment Installers
- Power Equipment Operators - Underground Sewer & Water
- Residential *** ALL ASSOCIATED RATES ***
- Sign Makers and Installers (Non-Electrical)
- Sign Makers and Installers (Electrical)
- Stage Rigging Mechanics (Non Structural)

The following occupations may be used only as outlined in the preceding text concerning "WSDOT's list for Suppliers - Manufacturers - Fabricators"

- Fabricated Precast Concrete Products
- Metal Fabrication (In Shop)

Definitions for the Scope of Work for prevailing wages may be found at the Washington State Department of Labor and Industries web site and in WAC Chapter 296-127.

INFORMATIONAL COPY ONLY - NOT FOR BIDDING

Washington State Department of Labor and Industries
Policy Statements
(Regarding Production and Delivery of Gravel, Concrete, Asphalt, etc.)

WAC 296-127-018 Agency filings affecting this section

Coverage and exemptions of workers involved in the production and delivery of gravel, concrete, asphalt, or similar materials.

(1) The materials covered under this section include but are not limited to: Sand, gravel, crushed rock, concrete, asphalt, or other similar materials.

(2) All workers, regardless of by whom employed, are subject to the provisions of chapter 39.12 RCW when they perform any or all of the following functions:

(a) They deliver or discharge any of the above-listed materials to a public works project site:

(i) At one or more point(s) directly upon the location where the material will be incorporated into the project; or

(ii) At multiple points at the project; or

(iii) Adjacent to the location and coordinated with the incorporation of those materials.

(b) They wait at or near a public works project site to perform any tasks subject to this section of the rule.

(c) They remove any materials from a public works construction site pursuant to contract requirements or specifications (e.g., excavated materials, materials from demolished structures, clean-up materials, etc.).

(d) They work in a materials production facility (e.g., batch plant, borrow pit, rock quarry, etc.,) which is established for a public works project for the specific, but not necessarily exclusive, purpose of supplying materials for the project.

(e) They deliver concrete to a public works site regardless of the method of incorporation.

(f) They assist or participate in the incorporation of any materials into the public works project.

INFORMATIONAL COPY ONLY - NOT FOR BIDDING

(3) All travel time that relates to the work covered under subsection (2) of this section requires the payment of prevailing wages. Travel time includes time spent waiting to load, loading, transporting, waiting to unload, and delivering materials. Travel time would include all time spent in travel in support of a public works project whether the vehicle is empty or full. For example, travel time spent returning to a supply source to obtain another load of material for use on a public works site or returning to the public works site to obtain another load of excavated material is time spent in travel that is subject to prevailing wage. Travel to a supply source, including travel from a public works site, to obtain materials for use on a private project would not be travel subject to the prevailing wage.

(4) Workers are not subject to the provisions of chapter 39.12 RCW when they deliver materials to a stockpile.

(a) A "stockpile" is defined as materials delivered to a pile located away from the site of incorporation such that the stockpiled materials must be physically moved from the stockpile and transported to another location on the project site in order to be incorporated into the project.

(b) A stockpile does not include any of the functions described in subsection (2)(a) through (f) of this section; nor does a stockpile include materials delivered or distributed to multiple locations upon the project site; nor does a stockpile include materials dumped at the place of incorporation, or adjacent to the location and coordinated with the incorporation.

(5) The applicable prevailing wage rate shall be determined by the locality in which the work is performed. Workers subject to subsection (2)(d) of this section, who produce such materials at an off-site facility shall be paid the applicable prevailing wage rates for the county in which the off-site facility is located. Workers subject to subsection (2) of this section, who deliver such materials to a public works project site shall be paid the applicable prevailing wage rates for the county in which the public works project is located.

[Statutory Authority: Chapter 39.12 RCW, RCW 43.22.051 and 43.22.270. 08-24-101, § 296-127-018, filed 12/2/08, effective 1/2/09. Statutory Authority: Chapters 39.04 and 39.12 RCW and RCW 43.22.270. 92-01-104 and 92-08-101, § 296-127-018, filed 12/18/91 and 4/1/92, effective 8/31/92.]

INFORMATIONAL COPY ONLY - NOT FOR BIDDING

****

Overtime Codes

Overtime calculations are based on the hourly rate actually paid to the worker. On public works projects, the hourly rate must be not less than the prevailing rate of wage minus the hourly rate of the cost of fringe benefits actually provided for the worker.

1. ALL HOURS WORKED IN EXCESS OF EIGHT (8) HOURS PER DAY OR FORTY (40) HOURS PER WEEK SHALL BE PAID AT ONE AND ONE-HALF TIMES THE HOURLY RATE OF WAGE.

B. All hours worked on Saturdays shall be paid at one and one-half times the hourly rate of wage. All hours worked on Sundays and holidays shall be paid at double the hourly rate of wage.

C. The first two (2) hours after eight (8) regular hours Monday through Friday and the first ten (10) hours on Saturday shall be paid at one and one-half times the hourly rate of wage. All other overtime hours and all hours worked on Sundays and holidays shall be paid at double the hourly rate of wage.

D. The first two (2) hours before or after a five-eight (8) hour workweek day or a four-ten (10) hour workweek day and the first eight (8) hours worked the next day after either workweek shall be paid at one and one-half times the hourly rate of wage. All additional hours worked and all worked on Sundays and holidays shall be paid at double the hourly rate of wage.

E. The first two (2) hours after eight (8) regular hours Monday through Friday and the first eight (8) hours on Saturday shall be paid at one and one-half times the hourly rate of wage. All other hours worked Monday through Saturday, and all hours worked on Sundays and holidays shall be paid at double the hourly rate of wage.

F. The first two (2) hours after eight (8) regular hours Monday through Friday and the first ten (10) hours on Saturday shall be paid at one and one-half times the hourly rate of wage. All other overtime hours worked, except Labor Day, shall be paid at double the hourly rate of wage. All hours worked on Labor Day shall be paid at three times the hourly rate of wage.

G. The first ten (10) hours worked on Saturdays and the first ten (10) hours worked on a fifth calendar weekday in a four-ten hour schedule, shall be paid at one and one-half times the hourly rate of wage. All hours worked in excess of ten (10) hours per day Monday through Saturday and all hours worked on Sundays and holidays shall be paid at double the hourly rate of wage.

H. All hours worked on Saturdays (except makeup days if work is lost due to inclement weather conditions or equipment breakdown) shall be paid at one and one-half times the hourly rate of wage. All hours worked Monday through Saturday over twelve (12) hours and all hours worked on Sundays and holidays shall be paid at double the hourly rate of wage.

I. All hours worked on Sundays and holidays shall also be paid at double the hourly rate of wage.

J. The first two (2) hours after eight (8) regular hours Monday through Friday and the first ten (10) hours on Saturday shall be paid at one and one-half times the hourly rate of wage. All hours worked over ten (10) hours Monday through Saturday, Sundays and holidays shall be paid at double the hourly rate of wage.

K. All hours worked on Saturdays and Sundays shall be paid at one and one-half times the hourly rate of wage. All hours worked on holidays shall be paid at double the hourly rate of wage.

M. All hours worked on Saturdays (except makeup days if work is lost due to inclement weather conditions) shall be paid at one and one-half times the hourly rate of wage. All hours worked on Sundays and holidays shall be paid at double the hourly rate of wage.

N. All hours worked on Saturdays (except makeup days) shall be paid at one and one-half times the hourly rate of wage. All hours worked on Sundays and holidays shall be paid at double the hourly rate of wage.

INFORMATIONAL COPY ONLY NOT FOR BIDDING

Overtime Codes Continued

1. O. The first ten (10) hours worked on Saturday shall be paid at one and one-half times the hourly rate of wage. All hours worked on Sundays, holidays and after twelve (12) hours, Monday through Friday and after ten (10) hours on Saturday shall be paid at double the hourly rate of wage.

P. All hours worked on Saturdays (except makeup days if circumstances warrant) and Sundays shall be paid at one and one-half times the hourly rate of wage. All hours worked on holidays shall be paid at double the hourly rate of wage.

Q. The first two (2) hours after eight (8) regular hours Monday through Friday and up to ten (10) hours worked on Saturdays shall be paid at one and one-half times the hourly rate of wage. All hours worked in excess of ten (10) hours per day Monday through Saturday and all hours worked on Sundays and holidays (except Christmas day) shall be paid at double the hourly rate of wage. All hours worked on Christmas day shall be paid at two and one-half times the hourly rate of wage.

R. All hours worked on Sundays and holidays shall be paid at two times the hourly rate of wage.

S. The first two (2) hours after eight (8) regular hours Monday through Friday and the first eight (8) hours on Saturday shall be paid at one and one-half times the hourly rate of wage. All hours worked on holidays and all other overtime hours worked, except Labor Day, shall be paid at double the hourly rate of wage. All hours worked on Labor Day shall be paid at three times the hourly rate of wage.

U. All hours worked on Saturdays shall be paid at one and one-half times the hourly rate of wage. All hours worked on Sundays and holidays (except Labor Day) shall be paid at two times the hourly rate of wage. All hours worked on Labor Day shall be paid at three times the hourly rate of wage.

V. All hours worked on Sundays and holidays (except Thanksgiving Day and Christmas day) shall be paid at one and one-half times the hourly rate of wage. All hours worked on Thanksgiving Day and Christmas day shall be paid at double the hourly rate of wage.

W. All hours worked on Saturdays and Sundays (except make-up days due to conditions beyond the control of the employer)) shall be paid at one and one-half times the hourly rate of wage. All hours worked on holidays shall be paid at double the hourly rate of wage.

X. The first four (4) hours after eight (8) regular hours Monday through Friday and the first twelve (12) hours on Saturday shall be paid at one and one-half times the hourly rate of wage. All hours worked over twelve (12) hours Monday through Saturday, Sundays and holidays shall be paid at double the hourly rate of wage. When holiday falls on Saturday or Sunday, the day before Saturday, Friday, and the day after Sunday, Monday, shall be considered the holiday and all work performed shall be paid at double the hourly rate of wage.

Y. All hours worked outside the hours of 5:00 am and 5:00 pm (or such other hours as may be agreed upon by any employer and the employee) and all hours worked in excess of eight (8) hours per day (10 hours per day for a 4 x 10 workweek) and on Saturdays and holidays (except labor day) shall be paid at one and one-half times the hourly rate of wage. (except for employees who are absent from work without prior approval on a scheduled workday during the workweek shall be paid at the straight-time rate until they have worked 8 hours in a day (10 in a 4 x 10 workweek) or 40 hours during that workweek.) All hours worked Monday through Saturday over twelve (12) hours and all hours worked on Sundays and Labor Day shall be paid at double the hourly rate of wage.

Z. All hours worked on Saturdays and Sundays shall be paid at one and one-half times the hourly rate of wage. All hours worked on holidays shall be paid the straight time rate of pay in addition to holiday pay.

INFORMATIONAL COPY ONLY - NOT FOR BIDDING

Overtime Codes Continued

2. ALL HOURS WORKED IN EXCESS OF EIGHT (8) HOURS PER DAY OR FORTY (40) HOURS PER WEEK SHALL BE PAID AT ONE AND ONE-HALF TIMES THE HOURLY RATE OF WAGE.

B. All hours worked on holidays shall be paid at one and one-half times the hourly rate of wage.

C. All hours worked on Sundays shall be paid at one and one-half times the hourly rate of wage. All hours worked on holidays shall be paid at two times the hourly rate of wage.

F. The first eight (8) hours worked on holidays shall be paid at the straight hourly rate of wage in addition to the holiday pay. All hours worked in excess of eight (8) hours on holidays shall be paid at double the hourly rate of wage.

G. All hours worked on Sunday shall be paid at two times the hourly rate of wage. All hours worked on paid holidays shall be paid at two and one-half times the hourly rate of wage including holiday pay.

H. All hours worked on Sunday shall be paid at two times the hourly rate of wage. All hours worked on holidays shall be paid at one and one-half times the hourly rate of wage.

O. All hours worked on Sundays and holidays shall be paid at one and one-half times the hourly rate of wage.

R. All hours worked on Sundays and holidays and all hours worked over sixty (60) in one week shall be paid at double the hourly rate of wage.

U. All hours worked on Saturdays shall be paid at one and one-half times the hourly rate of wage. All hours worked over 12 hours in a day or on Sundays and holidays shall be paid at double the hourly rate of wage.

W. The first two (2) hours after eight (8) regular hours Monday through Friday and the first eight (8) hours on Saturday shall be paid at one and one-half times the hourly rate of wage. All other hours worked Monday through Saturday, and all hours worked on Sundays and holidays shall be paid at double the hourly rate of wage. On a four-day, ten-hour weekly schedule, either Monday thru Thursday or Tuesday thru Friday schedule, all hours worked after ten shall be paid at double the hourly rate of wage. The first eight (8) hours worked on the fifth day shall be paid at one and one-half times the hourly rate of wage. All other hours worked on the fifth, sixth, and seventh days and on holidays shall be paid at double the hourly rate of wage.

3. ALL HOURS WORKED IN EXCESS OF EIGHT (8) HOURS PER DAY OR FORTY (40) HOURS PER WEEK SHALL BE PAID AT ONE AND ONE-HALF TIMES THE HOURLY RATE OF WAGE.

A. Work performed in excess of eight (8) hours of straight time per day, or ten (10) hours of straight time per day when four ten (10) hour shifts are established, or forty (40) hours of straight time per week, Monday through Friday, or outside the normal shift, and all work on Saturdays shall be paid at time and one-half the straight time rate. Hours worked over twelve hours (12) in a single shift and all work performed after 6:00 pm Saturday to 6:00 am Monday and holidays shall be paid at double the straight time rate of pay. Any shift starting between the hours of 6:00 pm and midnight shall receive an additional one dollar ($1.00) per hour for all hours worked that shift. The employer shall have the sole discretion to assign overtime work to employees. Primary consideration for overtime work shall be given to employees regularly assigned to the work to be performed on overtime situations. After an employee has worked eight (8) hours at an applicable overtime rate, all additional hours shall be at the applicable overtime rate until such time as the employee has had a break of eight (8) hours or more.

C. Work performed in excess of eight (8) hours of straight time per day, or ten (10) hours of straight time per day when four ten (10) hour shifts are established, or forty (40) hours of straight time per week, Monday through Friday, or outside the normal shift, and all work on Saturdays shall be paid at one and one-half times the hourly rate of wage. All work performed after 6:00 pm Saturday to 5:00 am Monday and Holidays shall be paid at double the hourly rate of wage. After an employee has worked eight (8) hours at an applicable overtime rate, all additional hours shall be at the applicable overtime rate until such time as the employee has had a break of eight (8) hours or more.

INFORMATIONAL COPY ONLY - NOT FOR BIDDING

Overtime Codes Continued

3. D. All hours worked between the hours of 6:00 pm and 6:00 am, Monday through Saturday, shall be paid at a premium rate of 15% over the hourly rate of wage. All other hours worked after 6:00 am on Saturdays, shall be paid at one and one-half times the hourly rate of wage. All hours worked on Sundays and holidays shall be paid at double the hourly rate of wage.

E. All hours worked Sundays and holidays shall be paid at double the hourly rate of wage. Each week, once 40 hours of straight time work is achieved, then any hours worked over 10 hours per day Monday through Saturday shall be paid at double the hourly wage rate.

F. All hours worked on Saturday shall be paid at one and one-half times the hourly rate of wage. All hours worked on Sunday shall be paid at two times the hourly rate of wage. All hours worked on paid holidays shall be paid at two and one-half times the hourly rate of wage including holiday pay.

H. All work performed on Sundays between March 16th and October 14th and all Holidays shall be compensated for at two (2) times the regular rate of pay. Work performed on Sundays between October 15th and March 15th shall be compensated at one and one half (1-1/2) times the regular rate of pay.

I. All hours worked on Saturdays shall be paid at one and one-half times the hourly rate of wage. In the event the job is down due to weather conditions during a five day work week (Monday through Friday,) or a four day-ten hour work week (Tuesday through Friday,) then Saturday may be worked as a voluntary make-up day at the straight time rate. However, Saturday shall not be utilized as a make-up day when a holiday falls on Friday. All hours worked Monday through Saturday over twelve (12) hours and all hours worked on Sundays and holidays shall be paid at double the hourly rate of wage.

4. ALL HOURS WORKED IN EXCESS OF EIGHT (8) HOURS PER DAY OR FORTY (40) HOURS PER WEEK SHALL BE PAID AT ONE AND ONE-HALF TIMES THE HOURLY RATE OF WAGE.

A. All hours worked in excess of eight (8) hours per day or forty (40) hours per week shall be paid at double the hourly rate of wage. All hours worked on Saturdays, Sundays and holidays shall be paid at double the hourly rate of wage.

B. All hours worked over twelve (12) hours per day and all hours worked on holidays shall be paid at double the hourly rate of wage.

C. On Monday through Friday, the first four (4) hours of overtime after eight (8) hours of straight time work shall be paid at one and one half (1-1/2) times the straight time rate of pay, unless a four (4) day ten (10) hour workweek has been established. On a four (4) day ten (10) hour workweek scheduled Monday through Thursday, or Tuesday through Friday, the first two (2) hours of overtime after ten (10) hours of straight time work shall be paid at one and one half (1-1/2) times the straight time rate of pay. On Saturday, the first twelve (12) hours of work shall be paid at one and one half (1-1/2) times the straight time rate of pay, except that if the job is down on Monday through Friday due to weather conditions or other conditions outside the control of the employer, the first ten (10) hours on Saturday may be worked at the straight time rate of pay. All hours worked over twelve (12) hours in a day and all hours worked on Sunday and Holidays shall be paid at two (2) times the straight time rate of pay.

INFORMATIONAL COPY ONLY - NOT FOR BIDDING

Overtime Codes Continued

4. D. All hours worked in excess of eight (8) hours per day or forty (40) hours per week shall be paid at double the hourly rate of wage. All hours worked on Saturday, Sundays and holidays shall be paid at double the hourly rate of pay. Rates include all members of the assigned crew.

EXCEPTION:
On all multipole structures and steel transmission lines, switching stations, regulating, capacitor stations, generating plants, industrial plants, associated installations and substations, except those substations whose primary function is to feed a distribution system, will be paid overtime under the following rates:

The first two (2) hours after eight (8) regular hours Monday through Friday of overtime on a regular workday, shall be paid at one and one-half times the hourly rate of wage. All hours in excess of ten (10) hours will be at two (2) times the hourly rate of wage. The first eight (8) hours worked on Saturday will be paid at one and one-half (1-1/2) times the hourly rate of wage. All hours worked in excess of eight (8) hours on Saturday, and all hours worked on Sundays and holidays will be at the double the hourly rate of wage.

All overtime eligible hours performed on the above described work that is energized, shall be paid at the double the hourly rate of wage.

E. The first two (2) hours after eight (8) regular hours Monday through Friday and the first eight (8) hours on Saturday shall be paid at one and one-half times the hourly rate of wage. All other hours worked Monday through Saturday, and all hours worked on Sundays and holidays shall be paid at double the hourly rate of wage.

On a four-day, ten-hour weekly schedule, either Monday thru Thursday or Tuesday thru Friday schedule, all hours worked after ten shall be paid at double the hourly rate of wage. The Monday or Friday not utilized in the normal four-day, ten hour work week, and Saturday shall be paid at one and one half (1½) times the regular shift rate for the first eight (8) hours. All other hours worked Monday through Saturday, and all hours worked on Sundays and holidays shall be paid at double the hourly rate of wage.

F. All hours worked between the hours of 6:00 pm and 6:00 am, Monday through Saturday, shall be paid at a premium rate of 20% over the hourly rate of wage. All hours worked on Sundays shall be paid at one and one-half times the hourly rate of wage. All hours worked on holidays shall be paid at double the hourly rate of wage.

G. All hours worked on Saturdays shall be paid at one and one-half times the hourly rate of wage. All hours worked Monday through Saturday over twelve (12) hours and all hours worked on Sundays and holidays shall be paid at double the hourly rate of wage.

Holiday Codes

5. A. Holidays: New Year's Day, Memorial Day, Independence Day, Labor Day, Thanksgiving Day, Friday after Thanksgiving Day, and Christmas Day (7).

B. Holidays: New Year's Day, Memorial Day, Independence Day, Labor Day, Thanksgiving Day, Friday after Thanksgiving Day, the day before Christmas, and Christmas Day (8).

C. Holidays: New Year's Day, Presidents' Day, Memorial Day, Independence Day, Labor Day, Thanksgiving Day, the Friday after Thanksgiving Day, And Christmas Day (8).

D. Holidays: New Year's Day, Memorial Day, Independence Day, Labor Day, Thanksgiving Day, the Friday and Saturday after Thanksgiving Day, And Christmas Day (8).

H. Holidays: New Year's Day, Memorial Day, Independence Day, Thanksgiving Day, the Day after Thanksgiving Day, And Christmas (6).

INFORMATIONAL COPY ONLY - NOT FOR BIDDING

Holiday Codes Continued

5. I. Holidays: New Year's Day, Memorial Day, Independence Day, Labor Day, Thanksgiving Day, and Christmas Day (6).

J. Holidays: New Year's Day, Memorial Day, Independence Day, Thanksgiving Day, Friday after Thanksgiving Day, Christmas Eve Day, And Christmas Day (7).

K. Holidays: New Year's Day, Presidents' Day, Memorial Day, Independence Day, Labor Day, Thanksgiving Day, Friday After Thanksgiving Day, The Day Before Christmas, And Christmas Day (9).

L. Holidays: New Year's Day, Martin Luther King Jr. Day, Memorial Day, Independence Day, Labor Day, Thanksgiving Day, Friday after Thanksgiving Day, And Christmas Day (8).

N. Holidays: New Year's Day, Presidents' Day, Memorial Day, Independence Day, Labor Day, Veterans' Day, Thanksgiving Day, The Friday After Thanksgiving Day, And Christmas Day (9).

P. Holidays: New Year's Day, Memorial Day, Independence Day, Labor Day, Thanksgiving Day, Friday And Saturday After Thanksgiving Day, The Day Before Christmas, And Christmas Day (9). If A Holiday Falls On Sunday, The Following Monday Shall Be Considered As A Holiday.

Q. Paid Holidays: New Year's Day, Memorial Day, Independence Day, Labor Day, Thanksgiving Day, and Christmas Day (6).

R. Paid Holidays: New Year's Day, Memorial Day, Independence Day, Labor Day, Thanksgiving Day, Day After Thanksgiving Day, One-Half Day Before Christmas Day, And Christmas Day. (7 1/2).

S. Paid Holidays: New Year's Day, Presidents' Day, Memorial Day, Independence Day, Labor Day, Thanksgiving Day, And Christmas Day (7).

T. Paid Holidays: New Year's Day, Washington's Birthday, Memorial Day, Independence Day, Labor Day, Thanksgiving Day, The Friday After Thanksgiving Day, Christmas Day, And The Day Before Or After Christmas (9).

Z. Holidays: New Year's Day, Memorial Day, Independence Day, Labor Day, Veterans Day, Thanksgiving Day, the Friday after Thanksgiving Day, And Christmas Day (8).

6. A. Paid Holidays: New Year's Day, Presidents' Day, Memorial Day, Independence Day, Labor Day, Thanksgiving Day, the Friday after Thanksgiving Day, And Christmas Day (8).

E. Paid Holidays: New Year's Day, Day Before Or After New Year's Day, Presidents Day, Memorial Day, Independence Day, Labor Day, Thanksgiving Day, the Friday after Thanksgiving Day, Christmas Day, and a Half-Day On Christmas Eve Day. (9 1/2).

G. Paid Holidays: New Year's Day, Martin Luther King Jr. Day, Presidents' Day, Memorial Day, Independence Day, Labor Day, Veterans' Day, Thanksgiving Day, the Friday after Thanksgiving Day, Christmas Day, and Christmas Eve Day (11).

H. Paid Holidays: New Year's Day, New Year's Eve Day, Memorial Day, Independence Day, Labor Day, Thanksgiving Day, Friday After Thanksgiving Day, Christmas Day, The Day After Christmas, And A Floating Holiday (10).

I. Paid Holidays: New Year's Day, Memorial Day, Independence Day, Labor Day, Thanksgiving Day, Friday After Thanksgiving Day, And Christmas Day (7).

INFORMATIONAL COPY ONLY - NOT FOR BIDDING

Holiday Codes Continued

6. T. Paid Holidays: New Year's Day, Presidents' Day, Memorial Day, Independence Day, Labor Day, Thanksgiving Day, The Friday After Thanksgiving Day, The Last Working Day Before Christmas Day, And Christmas Day (9).

Z. Holidays: New Year's Day, Memorial Day, Independence Day, Labor Day, Thanksgiving Day, Friday after Thanksgiving Day, And Christmas Day (7). If a holiday falls on Saturday, the preceding Friday shall be considered as the holiday. If a holiday falls on Sunday, the following Monday shall be considered as the holiday.

7. A. Holidays: New Year's Day, Memorial Day, Independence Day, Labor Day, Thanksgiving Day, the Friday and Saturday after Thanksgiving Day, And Christmas Day (8). Any Holiday Which Falls On A Sunday Shall Be Observed As A Holiday On The Following Monday. If any of the listed holidays falls on a Saturday, the preceding Friday shall be a regular work day.

B. Holidays: New Year's Day, Memorial Day, Independence Day, Labor Day, Thanksgiving Day, the Friday and Saturday after Thanksgiving Day, And Christmas Day (8). Any holiday which falls on a Sunday shall be observed as a holiday on the following Monday. Any holiday which falls on a Saturday shall be observed as a holiday on the preceding Friday.

C. Holidays: New Year's Day, Martin Luther King Jr. Day, Memorial Day, Independence Day, Labor Day, Thanksgiving Day, the Friday after Thanksgiving Day, And Christmas Day (8). Any holiday which falls on a Sunday shall be observed as a holiday on the following Monday. Any holiday which falls on a Saturday shall be observed as a holiday on the preceding Friday.

D. Paid Holidays: New Year's Day, Memorial Day, Independence Day, Labor Day, Veteran's Day, Thanksgiving Day, the Friday after Thanksgiving Day, And Christmas Day (8). Unpaid Holidays: President's Day. Any paid holiday which falls on a Sunday shall be observed as a holiday on the following Monday. Any paid holiday which falls on a Saturday shall be observed as a holiday on the preceding Friday.

E. Holidays: New Year's Day, Memorial Day, Independence Day, Labor Day, Thanksgiving Day, the Friday after Thanksgiving Day, And Christmas Day (7). Any holiday which falls on a Sunday shall be observed as a holiday on the following Monday. Any holiday which falls on a Saturday shall be observed as a holiday on the preceding Friday.

F. Holidays: New Year's Day, Memorial Day, Independence Day, Labor Day, Thanksgiving Day, the Friday after Thanksgiving Day, the last working day before Christmas day and Christmas day (8). Any holiday which falls on a Sunday shall be observed as a holiday on the following Monday. Any holiday which falls on a Saturday shall be observed as a holiday on the preceding Friday.

G. Holidays: New Year's Day, Memorial Day, Independence Day, Labor Day, Thanksgiving Day, and Christmas Day (6). Any holiday which falls on a Sunday shall be observed as a holiday on the following Monday.

H. Holidays: New Year's Day, Martin Luther King Jr. Day, Independence Day, Memorial Day, Labor Day, Thanksgiving Day, the Friday after Thanksgiving Day, the Last Working Day before Christmas Day and Christmas Day (9). Any holiday which falls on a Sunday shall be observed as a holiday on the following Monday. Any holiday which falls on a Saturday shall be observed as a holiday on the preceding Friday.

I. Holidays: New Year's Day, President's Day, Independence Day, Memorial Day, Labor Day, Thanksgiving Day, The Friday After Thanksgiving Day, The Day Before Christmas Day And Christmas Day (9). Any holiday which falls on a Sunday shall be observed as a holiday on the following Monday. Any holiday which falls on a Saturday shall be observed as a holiday on the preceding Friday.

J. Holidays: New Year's Day, Independence Day, Memorial Day, Labor Day, Thanksgiving Day and Christmas Day (6). Any holiday which falls on a Sunday shall be observed as a holiday on the following Monday. Any holiday which falls on a Saturday shall be observed as a holiday on the preceding Friday.

INFORMATIONAL COPY ONLY - NOT FOR BIDDING

Holiday Codes Continued

7. K. Holidays: New Year's Day, Memorial Day, Independence Day, Thanksgiving Day, the Friday and Saturday after Thanksgiving Day, And Christmas Day (8). Any holiday which falls on a Sunday shall be observed as a holiday on the following Monday. Any holiday which falls on a Saturday shall be observed as a holiday on the preceding Friday.

L. Holidays: New Year's Day, Memorial Day, Labor Day, Independence Day, Thanksgiving Day, the Last Work Day before Christmas Day, And Christmas Day (7). Any holiday which falls on a Sunday shall be observed as a holiday on the following Monday. Any holiday which falls on a Saturday shall be observed as a holiday on the preceding Friday.

M. Paid Holidays: New Year's Day, The Day after or before New Year's Day, President's Day, Memorial Day, Independence Day, Labor Day, Thanksgiving Day, the Friday after Thanksgiving Day, Christmas Day, And the Day after or before Christmas Day (10). Any holiday which falls on a Sunday shall be observed as a holiday on the following Monday. Any holiday which falls on a Saturday shall be observed as a holiday on the preceding Friday.

N. Holidays: New Year's Day, Memorial Day, Independence Day, Labor Day, Thanksgiving Day, the Friday after Thanksgiving Day, And Christmas Day (7). Any holiday which falls on a Sunday shall be observed as a holiday on the following Monday. When Christmas falls on a Saturday, the preceding Friday shall be observed as a holiday.

P. Holidays: New Year's Day, Memorial Day, Independence Day, Labor Day, Thanksgiving Day, Friday after Thanksgiving Day, And Christmas Day (7). Any holiday which falls on a Sunday shall be observed as a holiday on the following Monday.

Q. Holidays: New Year's Day, Memorial Day, Independence Day, Labor Day, Thanksgiving Day, the Friday after Thanksgiving Day, the Last Working Day before Christmas Day and Christmas Day (8). Any holiday which falls on a Sunday shall be observed as a holiday on the following Monday. If any of the listed holidays falls on a Saturday, the preceding Friday shall be a regular work day.

R. Paid Holidays: New Year's Day, the day after or before New Year's Day, President's Day, Memorial Day, Independence Day, Labor Day, Thanksgiving Day, the Friday after Thanksgiving Day, Christmas Day, and the day after or before Christmas Day (10). If any of the listed holidays fall on Saturday, the preceding Friday shall be observed as the holiday. If any of the listed holidays falls on a Sunday, the day observed by the Nation shall be considered a holiday and compensated accordingly.

S. Paid Holidays: New Year's Day, Memorial Day, Independence Day, Labor Day, Thanksgiving Day, Friday after Thanksgiving Day, Christmas Day, the Day after Christmas, and A Floating Holiday (9). If any of the listed holidays falls on a Sunday, the day observed by the Nation shall be considered a holiday and compensated accordingly.

T. Paid Holidays: New Year's Day, the Day after or before New Year's Day, President's Day, Memorial Day, Independence Day, Labor Day, Thanksgiving Day, the Friday after Thanksgiving Day, Christmas Day, and The Day after or before Christmas Day. (10). If any of the listed holidays falls on a Sunday, the day observed by the Nation shall be considered a holiday and compensated accordingly. Any holiday which falls on a Saturday shall be observed as a holiday on the preceding Friday.

INFORMATIONAL COPY ONLY - NOT FOR BIDDING

Note Codes

8. A. In addition to the hourly wage and fringe benefits, the following depth premiums apply to depths of fifty feet or more:
Over 50' To 100' -$2.00 per Foot for Each Foot Over 50 Feet
Over 100' To 150' -$3.00 per Foot for Each Foot Over 100 Feet
Over 150' To 220' -$4.00 per Foot for Each Foot Over 150 Feet
Over 220' -$5.00 per Foot for Each Foot Over 220 Feet

Note Codes Continued

8. C. In addition to the hourly wage and fringe benefits, the following depth premiums apply to depths of fifty feet or more:
Over 50' To 100' -$1.00 per Foot for Each Foot Over 50 Feet
Over 100' To 150' -$1.50 per Foot for Each Foot Over 100 Feet
Over 150' To 200' -$2.00 per Foot for Each Foot Over 150 Feet
Over 200' -Divers May Name Their Own Price

D. Workers working with supplied air on hazmat projects receive an additional $1.00 per hour.

L. Workers on hazmat projects receive additional hourly premiums as follows -Level A: $0.75, Level B: $0.50, And Level C: $0.25.

M. Workers on hazmat projects receive additional hourly premiums as follows: Levels A & B: $1.00, Levels C & D: $0.50.

N. Workers on hazmat projects receive additional hourly premiums as follows -Level A: $1.00, Level B: $0.75, Level C: $0.50, And Level D: $0.25.

P. Workers on hazmat projects receive additional hourly premiums as follows -Class A Suit: $2.00, Class B Suit: $1.50, Class C Suit: $1.00, And Class D Suit $0.50.

Q. The highest pressure registered on the gauge for an accumulated time of more than fifteen (15) minutes during the shift shall be used in determining the scale paid.

R. Effective August 31, 2012 – A Traffic Control Supervisor shall be present on the project whenever flagging or spotting or other traffic control labor is being utilized. A Traffic Control Laborer performs the setup, maintenance and removal of all temporary traffic control devices and construction signs necessary to control vehicular, bicycle, and pedestrian traffic during construction operations. Flaggers and Spotters shall be posted where shown on approved Traffic Control Plans or where directed by the Engineer. All flaggers and spotters shall possess a current flagging card issued by the State of Washington, Oregon, Montana, or Idaho. These classifications are only effective on or after August 31, 2012.

S. Effective August 31, 2012 – A Traffic Control Supervisor shall be present on the project whenever flagging or spotting or other traffic control labor is being utilized. Flaggers and Spotters shall be posted where shown on approved Traffic Control Plans or where directed by the Engineer. All flaggers and spotters shall possess a current flagging card issued by the State of Washington, Oregon, Montana, or Idaho. This classification is only effective on or after August 31, 2012.

T. Effective August 31, 2012 – A Traffic Control Laborer performs the setup, maintenance and removal of all temporary traffic control devices and construction signs necessary to control vehicular, bicycle, and pedestrian traffic during construction operations. Flaggers and Spotters shall be posted where shown on approved Traffic Control Plans or where directed by the Engineer. All flaggers and spotters shall possess a current flagging card issued by the State of Washington, Oregon, Montana, or Idaho. This classification is only effective on or after August 31, 2012.

U. Workers on hazmat projects receive additional hourly premiums as follows – Class A Suit: $2.00, Class B Suit: $1.50, And Class C Suit: $1.00. Workers performing underground work receive an additional $0.40 per hour for any and all work performed underground, including operating, servicing and repairing of equipment. The premium for underground work shall be paid for the entire shift worked. Workers who work suspended by a rope or cable receive an additional $0.50 per hour. The premium for work suspended shall be paid for the entire shift worked. Workers who do "pioneer" work (break open a cut, build road, etc.) more than one hundred fifty (150) feet above grade elevation receive an additional $0.50 per hour.

INFORMATIONAL COPY ONLY - NOT FOR BIDDING

Appendix C

Construction Quality Assurance Plan

INFORMATIONAL COPY ONLY - NOT FOR BIDDING

Construction Quality Assurance Plan: Ephrata Landfill – MPE Pilot Study Interim Action Pretreatment Facility and Evaporation Pond

Prepared for

Grant County Public Works Department *and* City of Ephrata

June 2016

Prepared by

Parametrix

INFORMATIONAL COPY ONLY NOT FOR BIDDING

Construction Quality Assurance Plan: Ephrata Landfill – MPE Pilot Study Interim Action Pretreatment Facility and Evaporation Pond

INFORMATIONAL COPY ONLY - NOT FOR BIDDING

Prepared for

Grant County Public Works Department
124 Enterprise Street SE
Ephrata, Washington 98823

and

City of Ephrata
121 Alder Street SW
Ephrata, Washington 98823

Prepared by

Parametrix
719 2nd Avenue, Suite 200
Seattle, WA 98104
T. 206.394.3700 F. 1.855.542.6353
www.parametrix.com

June 2016 | 553-1860-012 (01/01)

CITATION

Parametrix. 2016. Construction Quality Assurance Plan: Ephrata Landfill – MPE Pilot Study Interim Action Pretreatment Facility and Evaporation Pond. Prepared by Parametrix, Seattle, WA. June 2016.

INFORMATIONAL COPY ONLY - NOT FOR BIDDING

CERTIFICATION

The technical material and data contained in this document were prepared under the supervision and direction of the undersigned, whose seal, as a professional engineer licensed to practice as such, is affixed below.

STEPHEN M. EMGE
STATE OF WASHINGTON
34389
REGISTERED
PROFESSIONAL ENGINEER

6/2/14

Prepared by Stephen M. Emge, P.E.

INFORMATIONAL COPY ONLY - NOT FOR BIDDING

TABLE OF CONTENTS

1. CONSTRUCTION QUALITY ASSURANCE CONCEPTS AND OVERVIEW 1-1
1.1 Introduction 1-1
1.1.1 Project Description 1-1
1.1.2 Scope 1-1
1.1.3 Definitions 1-2
1.2 Responsibility and Authority 1-2
1.3 Personnel Qualifications 1-5
1.4 Written CQA Plan 1-5
1.5 Documentation 1-6
1.5.1 Daily Inspection Reports 1-6
1.5.2 Inspection and Testing Reports 1-7
1.5.3 Problem Identification and Corrective Measures Reports 1-7
1.5.4 Record Drawings 1-8
1.5.5 Final Documentation and Certification 1-8
1.5.6 Document Control 1-8
1.5.7 Storage of Records 1-8
1.6 Meetings 1-9
1.6.1 Pre-Bid Meeting 1-9
1.6.2 Pre-Construction Meeting 1-9
1.6.3 Progress Meetings 1-10
1.7 Weather 1-10
1.8 Work Stoppages 1-10

2. VACANT – COMPACTED SOIL LINER 2-1

3. GEOMEMBRANES 3-1
3.1 Introduction 3-1
3.2 Manufacturing 3-1
3.2.1 Submittal Review 3-1
3.2.2 Receiving Inspections 3-1
3.2.3 Acceptance and Conformance Testing 3-1
3.3 Handling 3-2
3.3.1 Handling and Site Storage 3-2
3.3.2 Deployment 3-3
3.3.3 Documentation 3-3

INFORMATIONAL COPY ONLY - NOT FOR BIDDING

TABLE OF CONTENTS (CONTINUED)

3.4 Seaming 3-4
3.4.1 Weld Crew Qualifications 3-4
3.4.2 Trial Seams 3-4
3.4.3 Documentation 3-4
3.5 Destructive Seam Testing 3-4
3.5.1 Sampling Patterns 3-5
3.5.2 Shear and Peel Testing 3-5
3.5.3 Thickness Measurements 3-5
3.5.4 Documentation 3-5
3.6 Nondestructive Seam Testing 3-5
3.6.1 Coverage 3-5
3.6.2 Documentation 3-6
3.7 Final Acceptance 3-6
3.8 Covering/Backfilling 3-6
3.8.1 Soil Backfilling 3-6
3.8.2 Covering with Geosynthetics 3-7

4. VACANT – GEOSYNTHETIC CLAY LINERS 4-1

5. VACANT – SOIL DRAINAGE SYSTEMS 5-1

6. MISCELLANEOUS GEOSYNTHETICS 6-1
6.1 Introduction 6-1
6.2 Geotextiles 6-1
6.2.1 Manufacturing 6-1
6.2.2 Handling 6-1
6.2.3 Installation 6-2
6.2.4 Backfilling or Covering 6-2
6.3 Geonet 6-3
6.3.1 Manufacturing 6-3
6.3.2 Handling 6-3
6.3.3 Installation 6-3
6.3.4 Backfilling or Covering 6-4

7. FINAL COVER SOILS 7-1
7.1 Introduction and Background 7-1
7.2 Material Selection 7-1
7.3 Control of Materials 7-1
7.4 Placement 7-2
7.5 Cover System Layers 7-2

INFORMATIONAL COPY ONLY - NOT FOR BIDDING

TABLE OF CONTENTS (CONTINUED)

8. APPURTENANCES 8-1
8.1 Introduction 8-1
8.2 Pipe and Fittings 8-1
8.2.1 Submittal Review 8-1
8.2.2 Receiving Inspections 8-1
8.2.3 Handling 8-1
8.2.4 Installation 8-1
8.3 Penetrations 8-2

LIST OF TABLES

1-1 Personnel Qualifications 1-5
3-1 Tests for Geomembrane by Contractor's Independent Laboratory 3-2
3-2 Tests for Geomembrane by Field Installer 3-2
6-1 Tests for Geonet by Independent Laboratory 6-4

APPENDIX

A CQA Forms

INFORMATIONAL COPY ONLY - NOT FOR BIDDING

KEY TERMS

ASTM	American Society for Testing and Materials
CQA	Construction Quality Assurance
CQC	Construction Quality Control
MPE	Multiphase Extraction
Owner	Grant County Public Works

INFORMATIONAL COPY ONLY - NOT FOR BIDDING

1. CONSTRUCTION QUALITY ASSURANCE CONCEPTS AND OVERVIEW

1.1 Introduction

This Construction Quality Assurance (CQA) plan is for the Ephrata Landfill Multiphase Extraction (MPE) Pilot Study Interim Action Pretreatment Facility and Evaporation Pond. It has been prepared by Parametrix, Inc. for Grant County Public Works (Owner) and the City of Ephrata. This CQA plan describes the actions the Owner will undertake to assure and to document that the project is constructed in general accordance with the project plans and specifications.

1.1.1 Project Description

The proposed construction includes the construction of a groundwater extraction, conveyance, and pretreatment system to remediate groundwater contamination at the Ephrata Landfill in Grant County, Washington. Work addressed in this CQA Plan includes the construction of a lined evaporation pond, landfill closure for a small area around the pond, and a passive lined venting system. The project includes installation of a bedding layer; installation of a 30-mil PVC geomembrane closure and venting liner; 60-mil HDPE geomembrane pond liner, placement of a geotextile cushion layer; placement of 12 inches of drainage soil layer, and placement of rock armor layer; installation of landfill gas venting system, installation of a doubled-lined HDPE evaporation pond, and other incidental work for the landfill.

1.1.2 Scope

Construction quality assurance is widely recognized as a critically important factor in overall quality management for waste containment facilities. The best of designs and regulatory requirements will not necessarily translate to a waste containment facility that is protective of human health and the environment unless the facility is properly constructed.

This CQA plan provides guidance to the Owner:

- For specific inspections, observations, and tests;
- For documentation of the observed quality of materials and work; and
- Serves as a reference source for personnel performing and monitoring construction.

The inspections, observations, testing, and documentation will be performed by the Owner's CQA organization.

This CQA plan does not establish construction requirements. Construction requirements are established by the plans and specifications and are not restated here. The criteria for acceptance will be as defined in the plans and specifications.

This CQA plan does not establish procedures to control or guide the operations of the manufacturer of materials or the Contractor or relieve them of their contractual responsibility to set up the necessary procedures and controls within their organizations to produce the quality of work called for in the plans and specifications. This CQA plan is not intended to function as or replace the Contractor's quality control program.

INFORMATIONAL COPY ONLY - NOT FOR BIDDING

1.1.3 Definitions

It is critical to define and understand the differences between CQC and CQA and to counterpoint where the different activities contrast and/or complement one another. The following definitions are made.

- **Construction Quality Control (CQC)**: A planned system of inspections that is used by the Contractor to directly monitor and control the quality of a construction project. CQC is normally performed by the geosynthetics installer for geosynthetic materials, or by the earthwork Contractor for natural soil materials, and is necessary to achieve quality in the constructed or installed system. CQC refers to measures taken by the installer or Contractor to determine compliance with the requirements for materials and workmanship as stated in the plans and specifications for the project.
- **Construction Quality Assurance (CQA)**: A planned system of activities that provides the Owner and permitting agency assurance that the facility was constructed as specified in the design. CQA includes inspections, verifications, audits, and evaluations of materials and workmanship necessary to determine and document the quality of the constructed facility. CQA refers to measures taken by the CQA organization to assess if the installer or Contractor is in compliance with the plans and specifications for a project.

CQA is performed independently from CQC. Although CQA and CQC are separate activities, they have similar objectives, and in a smoothly running construction project, the processes will complement one another. Conversely, an effective CQA program can lead to identification of deficiencies in the CQC process, but a CQA program by itself (in complete absence of a CQC program) is unlikely to lead to acceptable quality management. Quality is best ensured with effective CQC and CQA programs.

1.2 Responsibility and Authority

Many individuals are involved directly or indirectly in CQC and CQA activities. The individuals, their affiliation, and their responsibilities and authority are discussed below.

The principal organizations and individuals involved in designing, permitting, constructing, and inspecting waste containment facilities are:

- **Permitting Agency**: The permitting agency for this project is the Grant County Health District and Washington State Department of Ecology. It is the responsibility of the permitting agency to review the Owner's permit application, including the site specific CQA plan, for compliance with the agency's regulations and to make a decision to issue or deny a permit based on this review. The permitting agency also has the responsibility to review CQA documentation during or after construction of a facility, possibly including visits to the construction site to observe the CQC and CQA practices, to confirm that the approved CQA plan was followed and that the facility was constructed as specified in the design.
- **Owner**: This is the organization and representatives that will own and operate the facility. The Owner is responsible for the design, construction, and operation of the facility. This responsibility includes complying with the requirements of the permitting agency, the submission of CQA documentation, and assuring the permitting agency that the facility was constructed as specified in the construction plans and specifications and as approved by the permitting agency. The Owner has the authority to select and dismiss organizations charged with design, construction, and CQA.

INFORMATIONAL COPY ONLY - NOT FOR BIDDING

- **Owner's Representative**: The Owner's representative, or construction manager, is responsible to administer the construction program for the Owner. This responsibility includes communications to other members in the Owner's organization, permitting agency, general contractor, and CQA Engineer.
- **Design Engineer**: Parametrix, Inc. is the design engineer. The design engineer's primary responsibility is to design the facility so that it fulfills the operational requirements of the Owner, complies with accepted design practices for waste containment facilities, and meets or exceeds the minimum requirements of the permitting agency. The design engineer may be requested to change some aspects of the design if unexpected conditions are encountered during construction (e.g., a change in site conditions, unanticipated logistical problems during construction, or lack of availability of certain materials). Because design changes during construction are not uncommon, the design engineer is a major and essential part of the CQA process.
- **Manufacturer**: Many components, including geosynthetics, and piping materials of a waste containment facility are manufactured materials. The manufacturer is responsible for the manufacture of its materials and for quality control during manufacture. The manufacturer is responsible for certifying that its materials conform to the plans and specifications. The quality control steps taken by a manufacturer are critical to the overall quality management in construction of waste containment facilities. Such activities often take the form of process quality control, computer aided quality control, and the like. As requested, the manufacturer should provide information to the Owner, permitting agency, design engineer, fabricator, installer, or CQA Engineer that describes the quality control steps that are taken during the manufacturing of the product. In addition, the manufacturer should be willing to allow the Owner, permitting agency, design engineer, fabricator, installer, and CQA Engineer to observe the manufacturing process and quality control procedures if they so desire.
- **Fabricator**: Some materials are fabricated from manufactured components. For example, certain geomembranes are fabricated by seaming together smaller, manufactured geomembrane sheets at the fabricator's facility. The fabricator is responsible for certifying that its materials conform to the plans and specifications. The quality control steps taken by a fabricator are critical to the overall quality in construction of waste containment facilities. As requested, the fabricator should provide information to the Owner, permitting agency, design engineer, installer, or CQA Engineer that describes the quality control steps that are taken during the fabrication of the product. In addition, the fabricator should be willing to allow the Owner, permitting agency, design engineer, installer, or CQA Engineer to observe the fabrication process and quality control procedures if they so desire.
- **General Contractor**: The general contractor has overall responsibility for construction of the project and for CQC during construction. The general contractor arranges for the purchase of materials that meet specifications, enters into a contract with one or more fabricators (if fabricated materials are needed) to supply those materials, contracts with an installer (if separate from the general contractor's organization), and has overall control over the construction operations, including scheduling and CQC. The general contractor has the primary responsibility for ensuring that a facility is constructed in accordance with the plans and specifications that have been developed by the design engineer and approved by the permitting

INFORMATIONAL COPY ONLY - NOT FOR BIDDING

agency. The general contractor is also responsible for informing the Owner's representative of the scheduling and occurrence of all construction activities.

- **Installation Contractor (Installer)**: Manufactured products (such as geosynthetics) are placed and installed in the field by an installation contractor who is the general contractor or a subcontractor to the general contractor. The installer's personnel may be employees of the manufacturer or fabricator, or they may work for an independent installation company hired by the general contractor. The installer is responsible for handling, storage, placement, and installation of manufactured and/or fabricated materials. The installer will have a CQC plan to detail the proper manner that materials are to be handled, stored, placed, and installed.
- **Earthwork Contractor**: The earthwork contractor is responsible for grading the site to the elevations and grades shown on the plans and for constructing earthen components of the project (e.g., granular drainage layers, and embankments) according to the specifications. The earthwork contractor may be hired by the general contractor. In some cases, the general contractor's personnel may serve as the earthwork contractor. The earthwork contractor is responsible not only for grading the site to proper elevations but also for obtaining suitable earthen materials, transport and storage of those materials, preprocessing of materials (if necessary), placement and compaction of materials, and protection of materials during and (in some cases) after placement. Earthwork functions must be carried out in accordance with the plans and specifications approved by the permitting agency. The earthwork contractor should have a CQC plan and is responsible for CQC operations aimed at controlling materials and placement of those materials to conform with project specifications.
- **CQC Personnel**: Construction quality control personnel (CQC) are individuals who work for the general contractor, installation contractor, or earthwork contractor and whose job is to ensure that construction is taking place in accordance with the plans and specifications.
- **CQA Engineer**: The CQA Engineer has overall responsibility for construction quality assurance (CQA). The CQA Engineer is usually an individual experienced in a variety of activities, although particular specialists in soil placement, polymeric materials, and geosynthetic placement will invariably be involved in a project. The CQA Engineer is responsible for reviewing the CQA plan as well as plans and specifications for the project so that the CQA plan can be implemented with no contradictions or unresolved discrepancies. Other responsibilities of the CQA Engineer include education of inspection personnel on CQA requirements and procedures, scheduling and coordinating of CQA inspection activities, ensuring that proper procedures are followed, ensuring that testing laboratories are conforming to CQA requirements and procedures, confirming that test data are accurately reported and that test data are maintained for later reporting, and preparation of periodic reports. The CQA Engineer will review all documentation on a regular basis.

The most important duty of the CQA Engineer is overall responsibility for confirming that the facility was constructed in general accordance with the plans and specifications approved by the permitting agency. In the event of nonconformance with the project plans, specifications, or CQA plan, the CQA Engineer should notify the Owner as to the details and, if appropriate, recommend work stoppage and possibly remedial actions. The CQA Engineer is an authorized representative of the Owner. The CQA Engineer will be on the construction site on a regular basis.

INFORMATIONAL COPY ONLY - NOT FOR BIDDING

The CQA Engineer is responsible for certifying to the Owner and permitting agency that, in his or her opinion, the geosynthetics, leachate collection layer, and leachate pumping system have been constructed in general accordance with the plans, specifications, and CQA plan approved by the permitting agency. The certification statement is accompanied by a final CQA report that contains all the appropriate documentation, including daily observation reports, sampling locations, test results, drawings of record, and other relevant data.

- **CQA Personnel**: Construction quality assurance personnel are responsible for making observations and performing field tests to ensure that a facility is constructed in general accordance with the plans and specifications approved by the permitting agency. CQA personnel shall not revoke, alter, or relax the provisions of the plans and specifications. CQA personnel report to the CQA Engineer.
- **Testing Laboratory**: Many CQA tests are performed by commercial laboratories. The testing laboratory should have its own internal quality control plan to ensure that laboratory procedures conform to the appropriate American Society for Testing and Materials (ASTM) standards or other applicable testing standards. The testing laboratory is responsible for ensuring that tests are performed in accordance with applicable methods and standards, for following internal quality control procedures, and for reporting data. The testing laboratory must be willing to allow the Owner, permitting agency, design engineer, installer, or CQA Engineer to observe the sample preparation and testing procedures or record keeping procedures, if they so desire.

1.3 Personnel Qualifications

The key individuals involved in CQA and their minimum qualifications are listed in Table 1-1.

Table 1-1. Personnel Qualifications

Individual	Minimum Qualifications
Design Engineer	Registered Professional Engineer.
Owner's Representative	The specific individual designated by the Owner with knowledge of the project, its plans, specifications, and CQA documents.
CQA Personnel	Employed by an organization that operates separately from the Contractor and the Owner, who has construction inspection experience.
CQA Engineer	Employed by an organization that operates separately from the Contractor and Owner, who is a registered Professional Engineer who has shown competency and experience in similar projects.

1.4 Written CQA Plan

Quality assurance begins with a quality assurance plan. This CQA plan is the Owner's written plan for CQA activities. This CQA plan has been tailored to this specific project and coordinated with the project plans and specifications. It includes a detailed description of all CQA activities that will be used during construction to manage the installed quality of the facility.

INFORMATIONAL COPY ONLY - NOT FOR BIDDING

A copy of the plans, specifications, CQA plan, and CQA documentation will be retained at the project site during the project. The plans, specifications, and CQA documents may be reviewed during a site inspection by the permitting agency and will be the chief means for the facility Owner to demonstrate to the permitting agency that CQA objectives for this project are being met.

1.5 Documentation

A major purpose of the CQA process is to provide documentation for those individuals who were unable to observe the entire construction process (e.g., representatives of the permitting agency) so that those individuals can make informed judgments about the quality of construction for this project. CQA procedures and results must be thoroughly documented.

1.5.1 Daily Inspection Reports

Routine daily reporting and documentation procedures are required. Inspectors will prepare daily written inspection reports that will ultimately be included in the final CQA document. The daily reports will include information about work that was accomplished, tests and observations that were made, and descriptions of the adequacy of the work that was performed. As a minimum, the reports will contain the following:

- Date, project name, location, personnel involved in major activities, and other relevant identification information.
- Description of weather conditions, including temperature, cloud cover, and precipitation.
- Summaries of any meetings held and actions recommended or taken.
- Specific work units and locations of construction underway during that particular day.
- Equipment and personnel being utilized in each work task, including subcontractors.
- Identification of areas or units of work being inspected.
- Unique identifying sheet number of geomembranes for cross-referencing and document control.
- Description of off-site materials received, including any quality control data provided by the supplier.
- Calibrations or re-calibrations of test equipment, including actions taken as a result of re-calibration.
- Decisions made regarding approval of units of material or of work and/or corrective actions to be taken in instances of substandard or suspect quality.
- Unique identifying sheet numbers of inspection data sheets and/or problem reporting and corrective measures used to substantiate any CQA decisions described in the previous item.
- Signature of the CQA Engineer or designated representative.

See Appendix A for sample report forms.

INFORMATIONAL COPY ONLY - NOT FOR BIDDING

1.5.2 Inspection and Testing Reports

All observations, results of field tests, and results of laboratory tests performed on site or off site will be recorded on a suitable data sheet. Recorded observations may take the form of notes, charts, sketches, photographs, or any combination of these. Where possible, a checklist may be useful to ensure that pertinent factors are not overlooked.

As a minimum, the inspection data sheets will include the following information:

- Description or title of the inspection activity.
- Location of the inspection activity or location from which the sample was obtained.
- Type of inspection activity and procedure used.
- Unique identifying geomembrane sheet number for cross-referencing and document control.
- Recorded observation or test data.
- Results of the inspection activity, (e.g., pass/fail), comparison with specification requirements.
- Personnel involved in the inspection besides the individual preparing the data sheet.
- Signature of the CQA inspector and review signature by the CQA Engineer.

See Appendix A for sample report forms.

1.5.3 Problem Identification and Corrective Measures Reports

A problem is defined as material or workmanship that does not meet the requirements of the plans, specifications, or CQA plan for the project or any obvious defect in material or workmanship. Problem identification and corrective measures reports will contain the following information:

- Location of the problem.
- Description of the problem (in sufficient detail and with supporting sketches or photographic information where appropriate) to adequately describe the problem.
- When and by whom the problem was located (reference to inspection data sheet or daily summary report).
- Corrective measure(s).
- Who approved the corrective measure(s).
- Documentation of correction if corrective action was taken and completed prior to finalization of the problem and corrective measures report (reference to inspection data sheet, where applicable).
- Signature of the CQA inspector and review signature of the CQA Engineer.

See Appendix A for sample report forms.

INFORMATIONAL COPY ONLY - NOT FOR BIDDING

1.5.4 Record Drawings

Record Drawings will be prepared to document the actual constructed lines, grades, and conditions of each component of the project according to the as-built drawings submitted by the Contractor.

For geosynthetic components, the drawings of record will be provided by the geomembrane installer and will show the dimensions and location of each panel and geomembrane penetration. Each panel and seam will be identified with its appropriate alpha-numeric identification. The location of patches, repairs, and destructive test samples will be shown on individual panel inspection sheets.

1.5.5 Final Documentation and Certification

At the completion of a project, the Owner will submit a final report to the permitting agency. This report will include all of the Contractor's submittals, daily inspection reports, inspection data sheets, problem identification and corrective measures reports, and other documentation such as quality control data provided by manufacturers or fabricators, laboratory test results, photographs, drawings of record, internal CQA memoranda or reports with data interpretation or analyses, and design changes made by the design engineer during construction. The document will be certified by the CQA Engineer as follows:

In accordance with project CQA Plan, the undersigned professional engineer states that:

> A designated representative under the supervision of a licensed professional engineer was present during construction to observe construction activities, and that person has reviewed the results of the field testing of materials, and to the best of the person knowledge, and belief, the following project, Ephrata Landfill MPE Pilot Study Interim Action Pretreatment Facility and Evaporation Pond was constructed in accordance with the approved construction documents and the materials used in construction were in general conformance with the specifications. Based on the forgoing, the project can be classified as closed and the post-closure care period can commence.

1.5.6 Document Control

A control scheme will be implemented to organize and index all CQA and CQC documents. This scheme will be designed to allow easy access to all documents and will enable a reviewer to identify and retrieve submittals, inspection reports, or data sheets for any completed work element.

1.5.7 Storage of Records

During construction, the CQA Engineer will be responsible for all CQA documents. This includes a copy of the design criteria, plans, specifications, CQA plan, and originals of all data sheets and reports. Duplicate records will be kept at another location to avoid loss of this valuable information if the originals are destroyed.

Once construction is complete, the document originals will be stored by the Owner in a manner that will allow for easy access while still protecting them from damage. An additional copy should be kept at the facility if this is in a different location from the Owner's main files. A final copy should be kept by the permitting agency. All documentation should be maintained through the operating and post closure monitoring periods of the facility by the Owner and the permitting agency in an agreed upon format (hard copy, microfiche, electronic medium, etc.).

INFORMATIONAL COPY ONLY - NOT FOR BIDDING

1.6 Meetings

Communication is extremely important to quality management. Quality construction is easiest to achieve when all parties involved understand clearly their responsibility and authority. Meetings can be very helpful to make sure that responsibility and authority of each organization is clearly understood. During construction, meetings can help to resolve problems or misunderstandings and to find solutions to unanticipated problems that have developed.

1.6.1 Pre-Bid Meeting

Discussion of the CQA plan will be included in the pre-bid meeting so that the companies bidding on the construction will understand the level of CQA to be employed on the project.

1.6.2 Pre-Construction Meeting

The pre-construction meeting is held after a general construction contract has been awarded and the major subcontractors and material suppliers are established. It is usually held concurrent with the initiation of construction. The purpose of this meeting is to:

- Review construction plans and specifications, emphasize the critical aspects of a project necessary to ensure proper quality, begin planning and coordination of tasks, and anticipate any problems that might cause difficulties or delays in construction.
- Review the details of the CQA plan to make sure that the responsibility and authority of each individual is clearly understood, to agree on procedures to resolve construction problems, and to establish a foundation of cooperation in quality management.

The pre-construction meeting should be attended by the Owner's representative, design engineer, representatives of the general contractor and major subcontractors, the CQA Engineer, and a representative from the permitting agency, if that agency expects to visit the site during construction or independently observe CQA procedures.

The pre-construction meeting will include the following activities:

- Assign an individual to take minutes.
- Introduce parties and identify their responsibility and authority.
- Describe the plans and specifications and discuss any unique design features (so the Contractor will understand the rationale behind the general design), identify and discuss any potential construction problems, and discuss questions from any of the parties concerning the construction.
- Review and discuss the CQA plan, identifying expectations, and the most critical components of the project.
- Discuss CQC procedures that the installer and Contractor will employ.
- Discuss any special permit restrictions.
- Discuss responsibilities and lines of communication.

INFORMATIONAL COPY ONLY - NOT FOR BIDDING

- Discuss reporting procedures, distribution of documents, schedule for any regular meetings, and resolution of construction problems.
- Review site requirements and logistics, including safety procedures.
- Discuss construction variables (e.g., precipitation, wind, and temperature), which may affect the work and schedule.

It is very important that the procedures for inspection and testing be known to all, that the criteria for pass/fail decisions be clearly defined (including the resolution of test data outliers), that all parties understand the key problems that the CQA personnel will be particularly careful to identify, that each individual's responsibilities and authority be understood, and that procedures regarding resolution of problems be understood.

1.6.3 Progress Meetings

Weekly progress meetings may be held. Weekly meetings can be helpful in maintaining lines of communication, resolving problems, identifying action items, and improving overall quality management. When numerous critical work elements are being performed, the frequency of these meetings can be increased to biweekly, or even daily. Persons who should attend this meeting are those involved in the specific issues being discussed. At all times the CQA Engineer, or designated representative, should be present.

1.7 Weather

Weather can play a critical role in the construction of waste containment facilities. Installation of some geosynthetic materials (i.e., geomembrane) and compacted soil liners are particularly sensitive to weather conditions, including temperature, wind, humidity, and precipitation. The Contractor or installer is responsible for complying with the contract plans and specifications. It is the responsibility of the CQA personnel to make sure that these weather restrictions are observed during construction.

1.8 Work Stoppages

Unexpected work stoppages can occur due to a variety of causes, including labor strikes, contractual disputes, weather, CQA problems, etc. The CQA Engineer should be particularly careful during such stoppages to determine (1) whether in-place materials are covered and protected from damage (e.g., lifting of a geomembrane by wind; (2) whether partially covered materials are protected from damage (e.g., desiccation of a compacted soil liners); and (3) whether manufactured materials are properly stored and properly stored and properly or adequately protected (e.g., whether geotextiles are protected from ultraviolet exposure). The cessation of construction should not mean the cessation of CQA observation and documentation.

INFORMATIONAL COPY ONLY - NOT FOR BIDDING

2. VACANT – COMPACTED SOIL LINER

INFORMATIONAL COPY ONLY - NOT FOR BIDDING

3. GEOMEMBRANES

3.1 Introduction

This chapter focuses upon the manufacturing quality assurance of the geomembrane delivered to the site and the construction quality assurance of the complete installation of the geomembrane in the field.

3.2 Manufacturing

3.2.1 Submittal Review

All qualification statements, samples, produce descriptions, and quality control documentation and certification submitted by the manufacturer will be reviewed and initialed by CQA personnel for conformance with the specifications. The manufacturer's documentation will also be checked to verify that the testing frequency and the test parameters required by the specifications are implemented and followed.

All deviations from specified ranges (outliers) will be reported to the CQA Engineer and documented on Problem Identification and Corrective Measures Reports (Form M-1 in Appendix A). The CQA Engineer will review all outliers and determine the necessary corrective action. The CQA Engineer's determination will be based on all available data, guidance from ASTM D 4759 Standard Practice for Determining the Specification Conformance of Geosynthetics, and best engineering judgment.

All manufacturer's quality control submittals and delivered geomembrane panels/rolls will be tracked on a ledger to ensure that all required quality control submittals are received. See Appendix A, Form R-3, for a sample ledger.

3.2.2 Receiving Inspections

Visual observation of each shipment of geomembrane will be performed when the material is received on the site to ensure that the correct material is received, that it is in accordance with reviewed submittals, and is not damaged. A checklist will be used to document observations. See Appendix A, Form R-1, for sample receiving checklists.

3.2.3 Acceptance and Conformance Testing

Conformance testing will be performed on all geomembrane delivered to the project site. Sampling will be performed in accordance with ASTM D 4354 Standard Practice for Sampling of Geosynthetics for Testing, Procedure B - Sampling for Quality Assurance Testing. The samples will be tested for thickness, tensile strength and elongation, puncture resistance, tear resistance, and factory seam strength and adhesion by an independent accredited laboratory. Test methods will be as stipulated in the specifications and Tables 3-1 and 3-2.

INFORMATIONAL COPY ONLY - NOT FOR BIDDING

Table 3-1. Tests for Geomembrane by Contractor's Independent Laboratory

Parameter	Frequency	Test Method	Specification Section
Shear, Field	Every destructive test by installer	ASTM D 6392	9-37
Peel, Field	Every destructive test by installer	ASTM D 6392	9-37
Thickness	Every 5,000 square yards of material	ASTM D 5994	9-37
Tensile Properties, Break Elongation, Modules at 100%	Every 5,000 square yards of material	ASTM D 6392, Type IV	9-37
Shear, Factory	Every 1,000 lineal feet of seam	ASTM D 6392	9-37
Peel, Factory	Every 1,000 lineal feet of seam	ASTM D 6392	9-37

Table 3-2. Tests for Geomembrane by Field Installer

Parameter	Frequency	Test Method	Specification Section
Shear, Field	1 per 500 lineal feet of field seam	ASTM D 6392	8-05.3
Peel	1 per 500 lineal feet of field seam	ASTM D 6392	8-05.3

Factory seams will be destructively tested by an independent laboratory. Sampling will be on an average of one every 1,000 feet of factory seam. The test method will be as stipulated in the specifications as practical; samples will be collected at random from the fabricated panels.

All deviations from specified ranges (outliers) will be reported to the CQA Engineer and documented on Problem Identification and Corrective Measures Reports (Form M-1 in Appendix A). The CQA Engineer will review all outliers and determine what rejection or corrective action is required. The CQA Engineer's determination will be based on all available data, guidance from ASTM D 4759 Standard Practice for Determining the Specification Conformance of Geosynthetics, and best engineering judgment.

3.3 Handling

It is important that the geomembrane is handled, stored, transported, re-stored, re-handled, and deployed in a manner so as not to cause any damage.

3.3.1 Handling and Site Storage

Visual observations of the geomembrane prior to deployment will be performed to ensure that:

- Unloading of rolls or pallets does not damage the geomembrane.
- Pushing, sliding, or dragging of the rolls or pallets does not occur.
- Storage areas are and will continue to be free of standing water.
- The ground surface of the storage area is free of stones or other rough objects that could damage the geomembrane.

INFORMATIONAL COPY ONLY - NOT FOR BIDDING

- Geomembrane rolls are not stacked so high that crushing of the core or flattening of the rolls occurs. This limit is typically 2 to 5 rolls high.
- Pallets of geomembrane are not stacked at all.

The visual observations will be documented on the daily reports when applicable.

3.3.2 Deployment

Visual observations and verification will be performed during deployment to ensure that:

- The weather conditions (i.e., fog, rain, temperature, and wind) are within acceptable ranges.
- Rocks or other deleterious material that may cause damage are not trapped beneath the geomembrane.
- The construction equipment deploying the rolls or pallets does not deform or rut the soil subgrade excessively. Generally, tire or track deformations beneath the geomembrane should not be greater than 1-inch.
- The geomembrane is not deployed on frozen ground.
- Underlying geosynthetic materials do not have unacceptable folds, wrinkles, or other undulations that will be trapped under the geomembrane.
- Construction equipment is not running on underlying geosynthetics.
- Care is being taken to unroll or unfold the geomembrane close to its intended and final position to minimize dragging material into position.
- Sufficient slack is placed in the geomembrane to compensate for the coldest temperatures envisioned so that no tensile stresses are generated in the geomembrane or in its seams during installation.
- Sufficient slack is placed in the geomembrane so that it does not lift up off of the subgrade at any location (i.e., no trampolining over ditches or sumps).
- The geomembrane does not have excessive slack to the point where creases fold over upon themselves during backfilling of overlying materials.

Visual observation of the geomembrane sheet will be made to identify pinholes, surface blemishes, scratches, cuts, or other manufacturing defects or installation damage. Any imperfections will be marked for repair.

3.3.3 Documentation

Work on each individual geomembrane panel will be documented on its own individual Geomembrane Panel form. See Appendix A, Form I-1, for a sample form.

The Geomembrane Panel form will be used to document the following work:

- Pertinent visual observations made during deployment.
- Seaming crew identification, seaming time, and direction.

INFORMATIONAL COPY ONLY - NOT FOR BIDDING

- Location and results of nondestructive and destructive testing.
- Location and results of inspection of sumps, manholes, risers, and penetrations.
- Location of patches and repairs.
- Location of extrusion, chemical, and fusion welds.
- Geomembrane roll and/or panel identification number.
- Final panel inspection and approval for covering.

3.4 Seaming

The field seaming of the deployed geomembrane rolls or panels is perhaps the most critical aspect of their successful functioning as a barrier to liquid flow.

3.4.1 Weld Crew Qualifications

Only welders who are qualified in accordance with the specifications and who are identified as qualified welders by the installer will be allowed to weld geomembrane on the project.

3.4.2 Trial Seams

Trial seams, also called qualifying seams, are meant to serve as a pre-qualifying test for personnel, equipment, and procedures for thermal seaming processes (extrusion and fusion seaming). The seam is made on the identical geomembrane material under the same climatic and subgrade conditions as the actual field production seams will be made. Only weld crews that pass the test as stipulated in the specifications will be allowed to weld actual extrusion and fusion production seams.

Trial seams for thermal seaming processes will be required at the frequency dictated in the specifications. This is generally at the beginning of the work shift, after lunch breaks, whenever personnel or equipment are changed, and when climatic conditions change greatly.

For chemical seams, curing must occur before testing the seam. Chemical seams may take several days to air cure. Less time is required for chemical seams if a curing oven is used. Therefore, trial seams are not practical for chemical seams.

3.4.3 Documentation

Weld crews and their trial seam test results will be recorded on a trial seam ledger each time they qualify. Generally, each crew will qualify twice per shift. See Appendix A, Form I 8, for a sample ledger.

3.5 Destructive Seam Testing

Destructive testing is performed by actually cutting out and removing a portion of the completed production seam and testing the tensile properties of the seam sample in shear and peel modes. The purpose of this testing is to determine the strength of the seam.

INFORMATIONAL COPY ONLY - NOT FOR BIDDING

3.5.1 Sampling Patterns

Destructive seam samples will be taken at fixed increments as stipulated in the specifications and at locations identified by the CQA personnel. CQA personnel will observe all seam sample cutting and ensure that proper identification is placed on each portion of the sample. The installer will not be informed as to the sampling locations prior to sampling.

Samples will be taken at the end of the fixed increment. If CQA personnel suspect inadequate seaming in particular areas in field or factory seams, additional destructive samples will be taken in those suspect areas.

Generally, destructive samples will not be taken near penetrations, or in other areas where patching would be difficult.

3.5.2 Shear and Peel Testing

Each destructive seam sample will be tested by the installer on site for shear and peel strength in accordance with the specifications. Every destructive seam sample will be tested in an independent laboratory to verify the installer's testing apparatus and results.

All seams that do not pass the destructive test will be repaired and retested in accordance with the specifications.

3.5.3 Thickness Measurements

Prior to shipment of the material, an independent lab will measure the thickness of the geomembrane at a frequency listed in the specifications. The test method will be as stipulated in the specifications.

3.5.4 Documentation

Results of the installer's testing and the independent seam testing will be documented on a Destructive Seam Test ledger. The independent laboratory results are to be sent directly from the laboratory to the CQA Engineer. Retests associated with failed tests will also be tracked on this ledger. See Appendix A, Form I-2, for a sample ledger and Tables 3-1 and 3-2 for the tests and test frequency.

3.6 Nondestructive Seam Testing

Although it is important to conduct destructive tests on the fabricated seams, such tests do not give adequate information on the continuity and completeness of the entire seam between sampling locations. The goal of nondestructive seam testing is to verify the continuity of the seams over 100 percent of their length, or as much as is practical. This type of testing is not meant to quantify seam strength.

3.6.1 Coverage

General observation of nondestructive testing methods used by CQC personnel will be performed to ensure that proper testing procedures are being followed.

INFORMATIONAL COPY ONLY - NOT FOR BIDDING

Visual observation of all seams will be performed to ensure that nondestructive testing has been performed and documented in accordance with the specifications. All failing seams will be marked for repair.

3.6.2 Documentation

Nondestructive test results will be documented on the Geomembrane Panel forms (Appendix A, Form I-1) discussed previously.

3.7 Final Acceptance

Prior to covering the geomembrane with another geosynthetic or a soil layer, each panel will receive a final inspection to ensure that all seams have been tested, all damage has been repaired, and that the proper documentation has been recorded on the Geomembrane Panel form (Appendix A, Form I 1). The CQA personnel performing the final inspection will sign and date the Geomembrane Panel form when the panel is approved for covering.

3.8 Covering/Backfilling

After geomembrane installation is completed, it must be backfilled with soil or covered with a geosynthetic in a timely manner after its acceptance by the CQA personnel. This is a critical step since geomembranes are relatively thin materials with puncture and tear strengths of finite proportions.

3.8.1 Soil Backfilling

Visual observation of soil backfilling will be performed by CQA personnel. At least one CQA observer will be in each area where and when this work is being performed.

General visual observations will be performed to ensure that:

- Oversized or other deleterious materials that may damage the geomembrane are identified and removed from the soil backfill.
- The initial lift thickness is greater than or equal to the specified thickness.
- The type of equipment and soil placement methods are in accordance with the specifications.
- Construction equipment does not operate directly on the geomembrane.
- Folds of geomembrane are not trapped under the soil.
- The direction of soil placement, on slopes, is in accordance with the specifications.

This visual observation will be documented on daily checklists for each area being backfilled. See Appendix A, Form I-6, for a sample checklist.

INFORMATIONAL COPY ONLY - NOT FOR BIDDING

3.8.2 Covering with Geosynthetics

General visual observation of geosynthetic placement over geomembranes will be performed by CQA personnel to ensure that:

- Rocks or other deleterious materials that may damage the geomembrane are not trapped between the materials.
- The type of equipment and geosynthetic placement methods are in accordance with the specifications.
- The geomembrane is not damaged by dragging rolls or sheets of geosynthetics over it.
- Construction equipment does not operate directly on the geomembrane.
- Folds of geomembrane are not trapped between the materials.

This visual observation will be documented on daily checklists for each area being backfilled. See Appendix A for a sample checklist.

INFORMATIONAL COPY ONLY - NOT FOR BIDDING

4. VACANT – GEOSYNTHETIC CLAY LINERS

INFORMATIONAL COPY ONLY - NOT FOR BIDDING

5. VACANT – SOIL DRAINAGE SYSTEMS

INFORMATIONAL COPY ONLY - NOT FOR BIDDING

6. MISCELLANEOUS GEOSYNTHETICS

6.1 Introduction

Geosynthetics such as geotextiles, geonets, and geogrids are used to perform various functions such as filtration, reinforcement, cushioning, and liquid or gas transmission. Typical uses on this project are:

- Geotextile used for cushioning and protection of geomembranes.
- Geonet and geocomposite are used for liquid and gas transmission in the evaporation pond and venting system, respectively.

6.2 Geotextiles

6.2.1 Manufacturing

6.2.1.1 Submittal Review

All qualification statements, samples, product descriptions, and quality control certifications submitted by the manufacturer will be reviewed and initialed by the CQA personnel for conformance with the specifications.

6.2.1.2 Receiving Inspections

Visual observation of each shipment of geotextile will be performed when the material is received on the site to ensure that the correct material is received, that it is in accordance with reviewed submittals, is properly covered, and is not damaged. A checklist will be used to document observations. See Appendix A, Form R 1, for sample receiving checklists.

6.2.2 Handling

Geotextiles are the most sensitive of all geosynthetics to degradation induced by ultraviolet light exposure. All rolls of geotextiles, regardless of their type, must be enclosed in a protective wrapping that is opaque.

General observation will be performed during delivery, storage, and handling to ensure that:

- The protective wrapping prevents exposure of the geotextile to ultraviolet light.
- The geotextile rolls, core, and protective wrap are not damaged.
- The rolls are not stacked in a manner that will cause damage.

The visual observations will be documented on the daily reports when applicable.

INFORMATIONAL COPY ONLY - NOT FOR BIDDING

6.2.3 Installation

Visual observation will be performed during installation to ensure that:

- The underlying soil or geosynthetic has been approved for placement of the geotextiles.
- The construction equipment deploying the rolls does not damage the underlying soil or geosynthetic.
- Underlying geosynthetic materials do not have unacceptable folds, wrinkles, or other undulations that will be trapped under the geotextile.
- Care is being taken to unroll the geotextile close to its intended and final position to minimize dragging material into place.
- Wrinkles and folds are minimized.
- Trimming of the geotextile is performed using only an upward cutting hook blade to protect underlying geomembrane, if it exists.
- Rocks and other deleterious material that may cause damage are not trapped beneath the geotextile.
- Seaming is performed in accordance with the specifications.
- All damage is identified and repaired in accordance with the specifications.

This visual observation will be documented on daily checklists for each area being installed. See Appendix A, Form I-3, for a sample checklist.

6.2.4 Backfilling or Covering

Geotextiles should be covered before ultraviolet light causes significant degradation. Generally, this is within 14 days for polypropylene and 28 days for polyester geotextiles.

Visual observation of covering with geosynthetics or soil backfilling will be performed by CQA personnel. At least one CQA observer will be in each area where and when this work is being performed. Visual observations will be performed to ensure that:

- The geotextile is approved for covering by CQA personnel.
- The geotextile is covered by the next overlying layer of soil or geosynthetics within the time period stipulated in the specifications.
- Oversized or other deleterious materials that may damage the geotextile are identified and removed from the soil.
- The initial lift height of the soil is greater than or equal to the specified height.
- The type of equipment and soil placement methods are in accordance with the specifications.
- Construction equipment does not operate directly on the geotextile.
- The direction/method of soil placement is in accordance with the specifications (i.e., from bottom to top on slopes).

INFORMATIONAL COPY ONLY - NOT FOR BIDDING

This visual observation will be documented on daily checklists for each area being covered or backfilled. See Appendix A, Form I-6, for a sample checklist.

6.3 Geonet

Geonets are used to collect and /or transmit liquid or gas within the plane of the material because of their large open spaces (apertures). The apertures must be protected against migration and clogging by adjacent soil materials. Therefore, geonets are always used in conjunction with geomembranes and/or Geonets that have geotextiles bonded to one or both sides are called geocomposites. This project will be using just a geonet since it will be sandwiched between two layers of geomembrane.

6.3.1 Manufacturing

6.3.1.1 Submittal Review

All qualification statements, samples, product descriptions, and quality control certifications submitted by the manufacturer will reviewed and initialed by the CQA personnel for conformance with the specifications and approved submittals.

Test sample shall be pulled from the rolls or sheets that shall be installed for this project. Test shall state which roll or sheet or other identification number that corresponds to the test sample.

6.3.1.2 Receiving Inspections

Visual observation of each shipment of geonet will be performed when the material is received on the site to ensure that the correct material is received, that it is in accordance with reviewed submittals, is properly covered, and is not damaged. A checklist will be used to document observations. See Appendix A, Form R-1, for sample receiving checklists.

6.3.2 Handling

All rolls of geonet must be enclosed in a protective wrapping that is opaque.

General observation will be performed during delivery, storage, and handling to ensure that:

- The protective wrapping prevents exposure of the geonet to ultraviolet light.
- The geonet rolls, core, and protective wrap are not damaged.
- The rolls are not stacked in a manner that will cause damage.
- If weeds grow into the geonet during storage, the trapped pieces are removed by hand before deployment.

The visual observations will be documented on the daily reports when applicable.

6.3.3 Installation

Visual observations will be performed during installation to ensure that:

- The underlying geosynthetic has been approved for covering.
- The construction equipment deploying the rolls does not damage the underlying geosynthetic.

INFORMATIONAL COPY ONLY - NOT FOR BIDDING

- Underlying geosynthetic materials do not have unacceptable folds, wrinkles, or other undulations that will be trapped under the geonet or geosynthetic.
- Care is be taken to unroll the geonet close to its intended and final position to minimize dragging material into place.
- Wrinkles and folds are minimized.
- Trimming of the geonet is performed using only an upward-cutting hook blade to protect underlying geomembrane, if it exists.
- Rocks and other deleterious material that may cause damage or clogging are not trapped beneath or within the geonet.
- Joining/seaming is overlapped and tied and/or sewn in accordance with the specifications (i.e., ties are plastic, not metallic).
- All damage is identified and repaired in accordance with the specifications.

This visual observation will be documented on daily checklist for each area and shift being installed. See Appendix A, Form I-3, for a sample checklist.

6.3.4 Backfilling or Covering

Geonet should be covered before ultraviolet light causes significant degradation. Generally, this within 14 days for polypropylenes.

Visual observation of covering with geosynthetics will performed by CQA personnel. At least one CQA observer will be in each area where and when this work is being performed. Visual observations will be performed to ensure that:

- The geonet is approved for covering by CQA personnel.
- The geonet is covered by the next overlying layer of geosynthetic within the time period stipulated in the specifications.
- Oversized or other deleterious materials that may damage the geonet are identified and removed.
- Construction equipment does not operate directly on the geonet.

The visual observation will be documented on daily checklists for each area or shift being covered. See Appendix A, Form I-6, for a sample checklist and Table 6-1 for tests and test frequency.

Table 6-1. Tests for Geonet by Independent Laboratory

Parameter	Frequency	Test Method	Specification Section
In Plane Flow Rate	1 per project	ASTM D 4716	8-05.3

INFORMATIONAL COPY ONLY - NOT FOR BIDDING

7. FINAL COVER SOILS

7.1 Introduction and Background

Natural soil drainage materials are used in this project as:

- Bedding layer to provide a firm surface for the overlying geomembrane.
- Liner cover layer above the liner system to protect the underlying liner system and to drain infiltrated stormwater.
- Rock armor layer to protect from wind erosion.

The primary function of the cover system on this project is to drain and remove stormwater, and secondary function is to protect the underlying liner system.

7.2 Material Selection

Materials for the cover system will be obtained either from off-site or from on-site borrow area and/or Owner stockpiles. Therefore, for this project, the bedding and liner cover layers will be from off-site borrow sources, and the rock armor will be obtained directly from existing on-site borrow areas or stockpile sources. The materials must not damage any underlying geosynthetics. Therefore, the maximum soil particle size is typically specified and angular or crushed rocks are only allowed in designed applications. Periodic observation from the stockpile and at placement will be performed to ensure that:

- Deleterious materials (such as large stones, crushed or angular stones above specification limits, large pieces of organic or other detrimental matter) are not present in the material.
- The material remains consistent, such as color, texture, gradation, and other visually observable characteristics.

7.3 Control of Materials

Representative samples of the cover soil layer materials should be tested for grain size prior to installation. Because it is extremely difficult to remove and replace a soil material without damaging an underlying geosynthetic component, testing of soil materials must occur prior to placement of the material.

7.4 Placement

Soil materials are placed in layers (e.g., as liner cover soil layers). Placement considerations differ depending on the application and shall be placed in accordance with the specifications, plans, and this CQA plan.

INFORMATIONAL COPY ONLY - NOT FOR BIDDING

7.5 Cover System Layers

Granular soil drainage materials are usually hauled to the placement area in dump trucks, front end loaders, or scrapers and are typically loosely dumped and spread with bulldozers. Low ground pressure dozers can be used to spread the cover soil material and minimize the stress on the granular material and underlying geosynthetic components. Granular materials placed on top of geosynthetic components on side slopes should be placed from the bottom of the slope up. The dozer should not be allowed to make sharp turns while over the liner.

When granular drainage material is placed on a previously installed geosynthetic material and spread with a dozer, the sand or gravel should be lifted and tumbled forward so as to minimize shear forces on the underlying geosynthetic. The dozer should not be allowed to "crowd" the blade into the granular material and drag it over the surface of the underlying geosynthetic material.

Granular materials are often placed with a backhoe in small, isolated areas such as sumps and on side slopes. Some drainage materials may even be placed by hand, e.g., in sumps and around drainage pipes.

CQA personnel will position themselves in front of the working face of the placement operation to be able to observe the materials as they are spread and to ensure that there is no puncture or excessive wrinkling of underlying geosynthetic materials. CQA personnel will observe placement of the leachate collection layer to ensure that fine grained soil is not accidentally mixed with drainage material.

INFORMATIONAL COPY ONLY NOT FOR BIDDING

8. APPURTENANCES

8.1 Introduction

Appurtenances necessary for the proper functioning of the landfill gas system and leak detection pond system on this project include:

- Pipe and fittings for landfill gas transmission.
- Penetrations through geomembrane and other materials.

8.2 Pipe and Fittings

8.2.1 Submittal Review

All qualification statements, samples, product descriptions, and quality control certifications submitted by the manufacturer will be reviewed and initialed by the CQA personnel for conformance with the specifications and approved submittals.

8.2.2 Receiving Inspections

Visual observation of each shipment of pipe will be performed when the material is received on the site to ensure that the correct material and product certification is received, that it is in accordance with reviewed submittals, and is not damaged. A checklist will be used to document observations. See Appendix A, Form R-2, for sample receiving checklists.

8.2.3 Handling

General observation will be performed during delivery, storage, and handling to ensure that:

- The pipe is the specified size and material.
- The pipe is not damaged.
- The pallets are not stacked higher than allowed by the manufacturer's recommendations (generally three high).
- Outdoor storage is not longer than allowed by the manufacturer's recommendations (generally 12 months) unless temporary covering is provided.

The visual observations will be documented on the daily reports when applicable.

8.2.4 Installation

Proper backfill of soils around the pipe is important to prevent subsidence of the pipe while in service.

General observation will be performed during pipe installation to ensure that:

- The soil beneath, around, and above the pipe meets the requirements of the specifications and is placed and compacted in accordance with the specifications.
- The pipe is free of unacceptable nicks, gouges, or other damage.

INFORMATIONAL COPY ONLY - NOT FOR BIDDING

- The inside of pipe is free of shavings, perforation plugs, dirt, rocks, or other deleterious materials prior to welding.
- The pipe is laid to the proper horizontal and vertical alignment.
- Pipe fittings and all joints are installed in accordance with the specifications.
- All testing is performed in accordance with the specifications.

8.3 Penetrations

Careful visual inspection of geomembrane and liner penetrations will be performed, since neither destructive nor nondestructive tests can usually be accommodated, due to the irregular shape of penetrations.

Inspection of the geomembrane boot, skirt, and seams around penetrations will be documented on the appropriate Geomembrane Panel forms. Any seams that can be nondestructively tested around penetrations will be tested.

INFORMATIONAL COPY ONLY - NOT FOR BIDDING

Appendix A

CQA Forms

INFORMATIONAL COPY ONLY- NOT FOR BIDDING

CONSTRUCTION MEETING SUMMARY

Owner: _____ Project No.: _____

Contractor: _____ Meeting Date: _____

Contract: _____ Meeting Location: _____

Attendance Taken: ☐ Yes ☐ No

The following is intended to provide a summary of essential items discussed during the meeting. Any party questioning the accuracy or completeness must bring it to the attention of Parametrix, Inc. within one week of receipt.

ITEMS OF DISCUSSION

1. Corrections to last "CONSTRUCTION MEETING SUMMARY" ☐ None required

2. Is work on schedule? ☐ Yes ☐ No (If No, list reason):

3. Is Contractor's schedule up to date? ☐ Yes ☐ No (If No, Contractor must submit updated schedule.):

4. Submittal Status:

5. Health and Safety Issues:

6. New Work Items:

7. Construction ☐ problems or ☐ claims:

8. Outstanding Issues Needing Attention:

9. Other:

INFORMATIONAL COPY ONLY - NOT FOR BIDDING

PARAMETRIX

Form 01-CN-72/Rev. 04/02

CONTRACT CHANGE ORDER

Project Name:	Date:
TO: **(Contractor)**	Project Number: Location: Contract No.:
Contract Price prior to this Change Order:	Change Order No.:

Upon approval by the Owner, the Contractor is hereby requested to comply with the following changes from the contract plans and specifications:

Item No.	Description of Changes (quantities, units, unit prices, changes in completion schedule, etc.)	Increase in Contract Price	Decrease in Contract Price
	Sub-Total	$0.00	$0.00
	Sales Tax (%)	$0.00	$0.00
	Total Increase/Decrease	$0.00	$0.00
	Net Increase in Contract Price	$0.00	$0.00

The sum of _____ is hereby (added) (deducted) to the contract price, and the total adjusted price to date thereby is _____.

The time provided for completion in the contract is (unchanged) (increased) (decreased) by ___ (calendar) (work) days. This document shall become an amendment to the contract and all provisions of the contract will apply thereto.

Recommended by: Engineer:	Date:
Accepted by: Contractor:	Date:
Approved by: Owner:	Date:

INFORMATIONAL COPY ONLY - NOT FOR BIDDING

PARAMETRIX

Form 01-CN-65/Rev. 06/03

DAILY OBSERVATION REPORT

Job No.: _____ Phase: _____ Task: _____ Report No. _____

Project: _____

Owner: _____ Page 1 of _____

Contractor: _____ Date: _____

Contractor's Rep./Title: _____ Day: _____

Weather A.M.: _____ °F P.M.: _____ °F Site Conditions: (Good) (Fair) (Poor) _____

Location and Type of Work:

Number and Classification of Contractors, Men, and Equipment (include condition of equipment):

Work in Progress (include report of operations, materials received and condition, work start/stop time, and any unusual conditions):

Work Completed:

Discrepancies Noted: (Nonconformance Report #_____)

Discussions with Contractor (include orders given and received):

Any Cause for Dispute, Change Orders, or Delays, and Reasons:

Extra Work in Progress–Description (include Extra Work Report Form):

Items for Office Action:

Visitors:

INFORMATIONAL COPY ONLY - NOT FOR BIDDING

_____

Signature

PARAMETRIX

DAILY OBSERVATION REPORT (cont.)

Form 01-CN-65/Rev. 6/03

Report No. _____

Page _____ of _____

Date: _____

Notes Continued:

INFORMATIONAL COPY ONLY - NOT FOR BIDDING

_____

Signature

DEFECTIVE/REJECTED WORK NOTIFICATION

To Contractor: Notification Number: _____

Project: Project Number: _____

Time: _____ AM/PM

Owner: Observer: _____

Resident Eng.: Parametrix, Inc.

Pursuant to the General Conditions of the Contract, you are hereby notified of the following noncompliance violation:

Specification Section: _____ Paragraph: _____

Violation:

Contract Requirements:

Violation Detected By: ☐ Test ☐ Inspection ☐ Observation

Noncompliance Work is: ☐ Defective ☐ Rejected

Estimated Value of Noncomplying Work: $ _____

Defective work shall be corrected. Rejected work shall be removed and replaced. All costs shall be borne by the Contractor. Payment will not be made for defective or rejected work. Contractor shall notify Resident Engineer when defective or rejected work is corrected.

Resident Engineer: _____ Received by: _____

Authorized Representative Contractor

Date: _____ _____

Title

Distribution: _____

1. Resident Engineer
2. Owner
3. Field File

Date

INFORMATIONAL COPY ONLY - NOT FOR BIDDING

FIELD DIRECTIVE (WORK CHANGE DIRECTIVE)

FIELD DIRECTIVE NUMBER: _____

CONTRACT NUMBER: _____

DATE: _____

Project: _____

Owner: _____

Contractor: _____

Engineer: _____

Construction Manager: _____

The following additions, deletions, or revisions to the Work have been ordered and authorized:

DESCRIPTION OF ALTERATION:

REASON FOR CHANGE:

METHOD OF PAYMENT:

Contract Unit Price: $ _____

Lump Sum: $ _____

Cost of Work (Time and Materials) $ _____

REMARKS:

It is understood that this Work Change Directive will not change the Contract Price or Times but is evidence that the parties expect a Change Order to be subsequently issued reflecting any changes.

RECOMMENDED BY: _____ **DATE:** _____
Construction Manager

ACCEPTED BY: _____ **DATE:** _____
Contractor

APPROVED BY: _____ **DATE:** _____
Owner

INFORMATIONAL COPY ONLY - NOT FOR BIDDING

FIELD ORDER

FIELD ORDER NO.: _____

CONTRACT NO.: _____

SCHEDULE: _____

Project Name: _____

Project Number: _____

Owner Name: _____

TO:

FROM:

You are hereby requested to execute promptly this Field Order, which interprets the Contract Documents or directs minor changes in the Work without change in Contract Sum or Contract Time, unless noted below, and unless approved below by the Owner.

If you consider that a change in Contract Sum or Contract Time is required, and it is not noted on this Field Order, please submit your itemized proposal to Parametrix immediately and before proceeding with this Work. If your proposal is found to be satisfactory and in proper order, this Field Order will, in that event, be superseded by a Change Order.

DESCRIPTION OF CHANGES:

REASON FOR FIELD CHANGE:

DOCUMENT REFERENCES: Plan Sheet No.(s): _____ **Spec:** _____

ATTACHMENTS: _____

RECOMMENDED BY: _____ **DATE:** _____
Construction Manager

ACCEPTED BY: _____ **DATE:** _____
Contractor

APPROVED BY: _____ **DATE:** _____
Owner

INFORMATIONAL COPY ONLY- NOT FOR BIDDING

NEXT PANEL # ( )

Parametrix

North ○ Arrow	**GEOMEMBRANE PANEL #** _____ Form I-1

PRE-DEPLOYMENT CONDITIONS		
	Date	Condition
Geomembrane Roll		
Weather		
Subgrade		

PROJECT NAME
PMX #

VISUAL OBSERVATIONS

DEPLOYMENT
Geomembrane Roll #
Date:
Time:

AIR/VACUUM TESTING					
Date	AT/AL/VT	Distance Tested		Tech.	Pass/ Fail
		From	To		
		Cross Seam			

WELDS FOR PATCHES					
Date	Time	Tech	Mach.#	Location	Pass VT

( )LF

NEXT PANEL # ( )

DESTRUCTIVE SAMPLE		
Sample #	Date Removed	Results: Pass/Fail

LEGEND

⊗	=	Patch
AT	=	Air Test (Pressure)
AL	=	Air Lance Test
VT	=	Vacuum Test
PH	=	Pinhole
DS	=	Destructive Sample
☐	=	Destructive Sample
~	=	Extrusion Weld
N/A	=	Not Applicable

APPROVED FOR COVERING:

FINAL OBSERVATION: _____

Date Time

OBSERVED BY: _____

Signature of CQA Personnel

INFORMATIONAL COPY ONLY - NOT FOR BIDDING

Project Name: _____ **Form I-2**

PMX #: _____

DESTRUCTIVE SEAM TEST LEDGER

Date	Sample I.D.#	Seam I.D.#	Weld Type*	Machine I.D.#	Welder I.D.	Installer's Test Results (P/F)	3rd Party Lab Results (P/F)	Comments

* F.W. = Fusion Weld
E.W. = Extrusion Weld
C.W. = Chemical Weld

INFORMATIONAL COPY ONLY- NOT FOR BIDDING

INSTALLATION INSPECTION
GEONET/GEONET COMPOSITE/GEOTEXTILE

Form I-3

Project Name: _____ **PMX #** _____

Date: _____

Inspector: _____
(Signature)

Weather: _____

Temperature:

TYPE OF MATERIAL:

- ☐ Geonet
- ☐ Geonet Composite
- ☐ Geotextile

Location and quantity installed during shift: _____

(Provide explanatory notes if the answer to any of the following questions is "no." Include any remedial steps required.)

	YES	NO	NOTE NO.
• Is the underlying material approved and free from apparent damaging material?	☐	☐	_____
• Is the material installed in a manner that appears to prevent damage to underlying materials?	☐	☐	_____
• Is dragging of the material minimized?	☐	☐	_____
• Is the material installed with its longest dimension oriented up and down the slope?	☐	☐	_____
• Is the material free from apparent folds, damage, dirt, and debris?	☐	☐	_____
• Is the material installed over a smooth/clean surface?	☐	☐	_____
• Are seams lapped, tied, and/or sewn according to specifications?	☐	☐	_____
• Have all required repairs been completed?	☐	☐	_____

NOTES:

INFORMATIONAL COPY ONLY - NOT FOR BIDDING

GENERAL NOTE: The information presented herein represents the inspector's opinion of the Contractor's(s) adherence to requirements of the Drawings and Specifications. This shall not be relied upon as acceptance of the work nor shall it relieve the Contractor from contractual obligations and responsibilities, or generally accepted industry or customary practice.

INSTALLATION INSPECTION
GEOSYNTHETIC CLAY LINER (GCL)

Form I-4

Project Name: _____ **PMX #** _____

Date: _____ Weather: _____

Inspector: _____ Temperature: _____
(Signature)

Location and quantity of GCL installed during shift: _____

(Provide explanatory notes if the answer to any of the following questions is "no." Include any remedial steps required.)

	YES	NO	NOTE NO.
• Is the underlying material approved and free from apparent damaging material?	☐	☐	_____
• Is the GCL free from apparent damage after it is unrolled?	☐	☐	_____
• Is the GCL installed in a manner that prevents apparent damage to underlying materials?	☐	☐	_____
• Is dragging of the GCL minimized?	☐	☐	_____
• Is the GCL installed with its longest dimension oriented up and down the slope?	☐	☐	_____
• Are seams lapped and prepared according to specifications?	☐	☐	_____
• Are horizontal seams on side slopes kept to a minimum?	☐	☐	_____
• Are there any creases or irregularities in the placed GCL or underlying geosynthetics?	☐	☐	_____
• Are the GCLs being properly protected from moisture?	☐	☐	_____
• Is loss of clay material at cut edges minimized?	☐	☐	_____
• Have all required repairs been completed?	☐	☐	_____

NOTES:

INFORMATIONAL COPY ONLY - NOT FOR BIDDING

GENERAL NOTE: The information presented herein represents the inspector's opinion of the Contractor's(s) adherence to requirements of the Drawings and Specifications. This shall not be relied upon as acceptance of the work nor shall it relieve the Contractor from contractual obligations and responsibilities, or generally accepted industry or customary practice.

INSTALLATION INSPECTION
PIPE AND FITTINGS

Form I-5

Project Name: **PMX #**

Date: _____ Weather: _____

Inspector: _____ Temperature: _____
(Signature)

Location and quantity of pipe installed during shift: _____

_____

(Provide explanatory notes if the answer to any of the following questions is "no." Include any remedial steps required.)

	YES	NO	NOTE NO.
• Is the pipe installed in a manner that appears to prevent damage to underlying materials?	☐	☐	_____
• Is the pipe free of apparent defects, dirt, and debris?	☐	☐	_____
• Does the pipe appear to be properly joined?	☐	☐	_____
• Is the layout and location of the pipe installed in general accordance with Drawings?	☐	☐	_____
• Is associated geotextile, backfill, and compaction in accordance with specifications?	☐	☐	_____

NOTES:

GENERAL NOTE: The information presented herein represents the inspector's opinion of the Contractor's(s) adherence to requirements of the Drawings and Specifications. This shall not be relied upon as acceptance of the work nor shall it relieve the Contractor from contractual obligations and responsibilities, or generally accepted industry or customary practice.

INFORMATIONAL COPY ONLY - NOT FOR BIDDING

INSTALLATION INSPECTION
SOIL BACKFILLING

Form I-6

Project Name: **PMX #**

Date: _____

Inspector: _____
(Signature)

Weather: _____

Temperature:

Location and quantity of soil placed during shift: _____

TYPE OF MATERIAL:

- ☐ Drainage Soil
- ☐ Cover Soil
- ☐ Top Soil
- ☐ Compacted Clay Soil

(Provide explanatory notes if the answer to any of the following questions is "no." Include any remedial steps required.)

	YES	NO	NOTE NO.
• Is the underlying geosynthetic approved for covering?	☐	☐	_____
• Does the soil appear to be free of over-sized and other deleterious material?	☐	☐	_____
• Does the initial lift thickness appear to meet or exceed the specified thickness?	☐	☐	_____
• Is the soil placed in a manner that appears to prevent damage to and minimize wrinkles in underlying geosynthetics?	☐	☐	_____

NOTES:

INFORMATIONAL COPY ONLY - NOT FOR BIDDING

GENERAL NOTE: The information presented herein represents the inspector's opinion of the Contractor's(s) adherence to requirements of the Drawings and Specifications. This shall not be relied upon as acceptance of the work nor shall it relieve the Contractor from contractual obligations and responsibilities, or generally accepted industry or customary practice.

One Form Per Shift

Parametrix
Form I-7

CERTIFICATE OF ACCEPTANCE OF SOIL SUBGRADE SURFACE

PROJECT NAME: _____

PMX NUMBER: _____

OWNER: _____

LOCATION: _____

I, the undersigned, a duly appointed representative of _____ (installer), have visually observed the soil subgrade surface described below, and found it to be an acceptable surface on which to install geomembrane.

This certification is based on observations of the surface of the subgrade only. No subterranean inspections or tests have been performed, and no representations or warranties regarding conditions which may exit below the surface of the subgrade are made.

Area Being Accepted: _____

_____

_____

_____

_____

Date: _____

Signature: _____

Name: _____

Title: _____

INFORMATIONAL COPY ONLY - NOT FOR BIDDING

Form I-8

TRIAL SEAM TEST LEDGER

Project Name: _____ **Shear Strength** _____ **ppi**

PMX # _____ **Peel Strength** _____ **ppi**

		Welding		Test Pass/Fail				
Date	**Time**	**Crew**	**Mach. #**	**Shear**	**Peel**	**Retest**	**Inspector**	**Comments**

NOTES:

INFORMATIONAL COPY ONLY - NOT FOR BIDDING

GENERAL NOTE: The information presented herein represents the inspector's opinion of the Contractor's(s) adherence to requirements of the Drawings and Specifications. This shall not be relied upon as acceptance of the work nor shall it relieve the Contractor from contractual obligations and responsibilities, or generally accepted industry or customary practice.

Parametrix

AIR TEST FOR PIPE

Form M-3

Project Name: _____ **PMX #** _____

Test Date: _____

Maximum Pressure Drop: _____ (psi)

TYPE OF MATERIAL:

☐ PVC

☐ HDPE

Pipe Under Test				Field Test Operations Data					
LOCATION	Dia. D (in.)	Length L (ft.)	Specification Time	Pressure Initially Raised To (psi)	Time Allowed for Pressure to Stabilize (min.)	Start Test Pressure (psi)	Stop Test Pressure (psi)	Elapsed Time	Pass or Fail

Inspector's Name and Title: _____

Signature of Inspector: _____

If a section fails, the following items should be completed:

Identify section(s) that failed: _____

Leak (was) (was not) located. Method used: _____

Description of leakage found:

Description of corrective action taken: _____

For test results after repair, refer to Test No. _____. Inspector _____

NOTES:

INFORMATIONAL COPY ONLY- NOT FOR BIDDING

GEOSYNTHETICS RECEIVING INSPECTION CHECKLIST

Form R-1

Project Name: _____ **PMX #** _____

Date Received: _____

Inspected by: _____

Storage Location: _____

Delivery Number:

TYPE OF MATERIAL:

- ☐ Geomembrane
- ☐ Geonet
- ☐ Geonet Composite
- ☐ Geotextile
- ☐ GCL

		Note No.
Manufacturer		
Manufacturer's Designation		
Number of Rolls Delivered		
Roll Identification Numbers (If Applicable)		

(Provide explanatory notes if the answer to any of the following questions is "no." Include any remedial steps required.)

	YES	NO	NOTE NO.
• Is the material properly covered?	☐	☐	
• Is the material free of apparent damage?	☐	☐	
• Is there an approved submittal?	☐	☐	
• Has the manufacturer's quality control documentation been reviewed?	☐	☐	
• Is the material stored according to mfr. recommendations and/or specifications?	☐	☐	
• Have conformance samples been sent to the laboratory?	☐	☐	

NOTES:

INFORMATIONAL COPY ONLY - NOT FOR BIDDING

GENERAL NOTE: The information presented herein represents the inspector's opinion of the Contractor's(s) adherence to requirements of the Drawings and Specifications. This shall not be relied upon as acceptance of the work nor shall it relieve the Contractor from contractual obligations and responsibilities, or generally accepted industry or customary practice.

PIPE RECEIVING INSPECTION CHECKLIST

Form R-2

Project Name: _____ **PMX #** _____

Date Received: _____

Inspected by: _____

Storage Location: _____

Delivery Number: _____

TYPE OF MATERIAL:

☐ PVC
☐ HDPE

		Note No.
Manufacturer	_____	_____
Manufacturer's Designation	_____	_____
Amount Delivered	_____	_____

(Provide explanatory notes if the answer to any of the following questions is "no." Include any remedial steps required.)

	YES	NO	NOTE NO.
• Is the pipe free of apparent damage?	☐	☐	_____
• Is there an approved submittal?	☐	☐	_____
• Has the manufacturer's certification been reviewed?	☐	☐	_____
• Is the material stored according to mfr. recommendations and/or specifications?	☐	☐	_____

NOTES:

INFORMATIONAL COPY ONLY - NOT FOR BIDDING

GENERAL NOTE: The information presented herein represents the inspector's opinion of the Contractor's(s) adherence to requirements of the Drawings and Specifications. This shall not be relied upon as acceptance of the work nor shall it relieve the Contractor from contractual obligations and responsibilities, or generally accepted industry or customary practice.

One Form Per Material Type

Parametrix

PIPE RECEIVING INSPECTION CHECKLIST

Form R-3

Project Name: _____ **PMX #** _____

TYPE OF MATERIAL:

- ☐ Geomembrane
- ☐ Geonet
- ☐ Geonet Composite
- ☐ GCL

Delivery #	Date		Panel/Roll #s	Form R-1 Completed?	Inspector/Comments
	Received	Checked			
				☐	
				☐	
				☐	
				☐	
				☐	
				☐	
				☐	
				☐	
				☐	
				☐	
				☐	
				☐	
				☐	
				☐	
				☐	
				☐	
				☐	
				☐	
				☐	
				☐	

NOTES:

INFORMATIONAL COPY ONLY-NOT FOR BIDDING

GENERAL NOTE: The information presented herein represents the inspector's opinion of the Contractor's(s) adherence to requirements of the Drawings and Specifications. This shall not be relied upon as acceptance of the work nor shall it relieve the Contractor from contractual obligations and responsibilities, or generally accepted industry or customary practice.

PARAMETRIX

PAYMENT APPLICATION AND CERTIFICATE

Date: _____

Sheet 1 of 2

Application No. _____

Period: _____

Project: _____ **Contract No.** _____

Contractor: _____

1. Original Contract Sum _____

2. Contract Modifications Approved in previous Applications: _____

   Additons: _____ Deductions _____

3. Contract Modifications Approved this Period (List Contract Modifications No.): _____

   Additions: _____ Deductions _____ _____

4. Net Change by Contract Modifications (sum of Lines 2 and 3) _____

5. Revised Contract Amount (Sum of Lines 1 and 4) _____

6. Total Value of Work to Date (Estimate Attached) _____

7. Percent Project Complete (Line 6/ Line 5) x 100=[a] #DIV/0!

8. Total Materials on Hand (Listing Attached) _____

9. Subtotal - Work Completed and Stored (Sum of Lines 6 and 8) _____

10. Total Retainage (5% times Line 9) _____

11. Total Earned to Date, Less Retainage (Line 9 less Line 10) _____

12. Less Previous Certificates for Payment (Line 9 from Previous Applications) _____

13. Current Month Subtotal (Line 11 less Line 12 plus Line 10) _____

14. Current Month Retainage (Line 13 times 5%) _____

15. Current Month Sales Tax (Line 13 times 8.4%) _____

16. Current Month Payment Due (Line 13 less Line 14 plus Line 15) _____

[a] Percent Complete is percent of work to date complete based on original contract amount with adjustments for approved contract modifications.

INFORMATIONAL COPY ONLY - NOT FOR BIDDING

PAYMENT APPLICATION AND CERTIFICATE

Date: _____
Sheet: 2 of 2

The undersigned Contractor certifies that the Work covered by this Application for Payment has been completed in accordance with the Contract Documents, that the current payment shown herein is now due, and that title for all Work, materials, and equipemtn covered in this Application will pass to the Owner free and clear of all liens at the time of payment.

Contractor	Date

I hereby acknowledge that the material and labor involved on the above estimate is correct to the best of my knowledge, information, and payment is due the Contractor.

Project Manager - Parametrix, Inc.	Date

INFORMATIONAL COPY ONLY - NOT FOR BIDDING

PAYMENT APPLICATION OF MATERIALS ON HAND

Date: _____ **Project No.:** _____

Project: _____

Contractor: _____

To: _____

In accordance with the provisions of the GENERAL CONDITIONS, request is made for payment as "Materials on Hand" for the following materials:

Item No.	Qty.	Material Description	Invoice Number	Value	Type of Substantiating Evidence of Purchase Attached	Where Stored

Affidavit:
The materials listed above have been purchased exclusively for use on the above-referenced project. The material is separated from other like materials and is physically identified as the property of and for use only on this Contract. The Owner may enter upon the premises for the purposes set forth in the GENERAL CONDITIONS for inspection, checking, or auditing, or for any other purpose as they consider necessary. It is expressly understood and agreed that this information and affidavit is furnished to the Owner for the purpose of obtaining payment for the above materials before they are delivered to, or incorporated into, the project described above, and that the storage thereof at the location is subject to the Conditions of the Contract. A revised form showing the current status of the value of materials for which payment is being requested and will be submitted with each payment.

Contractor Signature: _____ **Date:** _____

Title: _____

When stored at a location other than on the job site or at a fabricator's yard, a warehouse receipt for the material issued in the name of the Owner shall accompany the request for payment in case the storage location (other than the job site or fabricator's yard) is the Contractor's property, the area containing the material to be paid for shall be fenced off and posted to indicate that the materials within the fenced area are under the control of the Owner. Prior to storing at a location other than the job site, approval must be obtained from the Construction Manager.

Instructions to Contractor:
Submit original and two copies to the Resident Engineer not later than one week prior to the Payment Request.
Attach evidence of purchase (and warehouse receipt, when required) to original.

INFORMATIONAL COPY ONLY - NOT FOR BIDDING

PARAMETRIX

Form 02-CN-81/Rev. 06/02

PHOTO RECORD FILE INDEX

Project: _____

Roll Number: _____

Period From: _____ To _____

Prepared by: _____

Project Number: _____

Contract Number:

Picture Number	Photo Description/Location	Date	Daily Log Number

INFORMATIONAL COPY ONLY - NOT FOR BIDDING

Project Closeout Procedures Checklist

Responsibility			Date Received
Construction Manager	1.	Preliminary Punch List	_____
Owner	2.	Beneficial Occupancy—if County desires (establishes warranty date with exception of Punch List items)	_____
		a. Copy in Risk Management Office with Job Cost Breakdown on	_____
Owner	3.	At beneficial Occupancy or Final Acceptance, accept responsibility for:	
		a. Insurance (date of notice to Risk Management)	_____
		b. Utilities (date of notice to client agency)	_____
Construction Manager	4.	Final Punch List	_____
Contractor	5.	100 percent completion of Specification Replacements	
		a. Guarantees	_____
		b. Warranties	_____
		c. Test Results	_____
		d. As-Built Drawings by Contractor (to Architect)	_____
		e. Maintenance and Instruction Manuals	_____
Contractor	6.	Final Billing/100 percent (all items complete)	_____
		a. Release of Liens; Contractor and Subcontractor forms	_____
Owner	7.	State Tax Release and Certificate of Payment of Seattle B&O Tax	
		a. Applied for by Owner on _____	
		b. Received in	_____
Construction Manager	8.	Letter to Owner recommending Acceptance	_____
Owner	9.	Final Acceptance Letter (identifying Warranty date)	
		a. Copy to Risk management Officer with Cost Breakdown	_____
Owner	10.	Lien Search – 30 days after Final Acceptance	
		a. Request for Lien Search on _____	
		b. Received on	_____
Contractor	11.	Certificate of Occupancy issued by Permit Agency	_____
Contractor	12.	Certificate of Compliance (form in specs)	_____
Contractor	13.	Final Affidavit of Wages Paid	_____
Contractor	14.	Department of Labor and Industries Insurance Release	_____
Owner	15.	Notice of Completion and Acceptance (Exec. Sig.)	_____
Owner	16.	Processing of Retainage Payment begins 30 days following date of Final Acceptance	_____
		a. Memorandum written on _____	
Construction Manager	17.	Final Inspection prior to end of guarantee period	_____

INFORMATIONAL COPY ONLY - NOT FOR BIDDING

PUNCH LIST

Date: _____ Task No.: _____

Construction Contract: _____

Contractor: _____

Inspected by: _____

Item	Location	Action Required	Accepted	
			By	Date

INFORMATIONAL COPY ONLY - NOT FOR BIDDING

Record of Communication

☐ Telephone Communication

☐ Incoming ☐ Outgoing

Individual _____
Phone No. _____
Organization _____
Location _____

Project No.: _____
Project Name: _____
Date: _____ Time: _____
By: _____

Route To:

☐ **PMX Staff Meeting**

☐ **Client/Agency Consultation**

Meeting Location: _____

Participants:

INFORMATIONAL COPY ONLY - NOT FOR BIDDING

SHOP DRAWING TRANSMITTAL CONTROL FORM

Contractor: _____

Phone: _____

Fax: _____

Owner: _____

Project Description: _____

Project No.: _____

Transmittal Number	Item No.	Spec. Section No.	Item Description	Supplier or Manufacturer	Date Rec'd	Consultant			Action					Checked By	Date Returned to Contractor	Remarks
						Reviewed By	Date Sent	Date Ret'd	"A" No Exceptions Taken	"B" Make Corrections Noted	"C" Revise and Resubmit	"D" Submit Specified Item	"E" Rejected			

INFORMATIONAL COPY ONLY - NOT FOR BIDDING

SHOP DRAWING TRANSMITTAL CONTROL FORM

Contractor: _____

Phone: _____

Fax: _____

Owner: _____

Project Description: _____

Project No.: _____

Transmittal Number	Item No.	Spec. Section No.	Item Description	Supplier or Manufacturer	Date Rec'd	Consultant			Action					Checked By	Date Returned to Contractor	Remarks
						Reviewed By	Date Sent	Date Ret'd	"A" No Exceptions Taken	"B" Make Corrections Noted	"C" Revise and Resubmit	"D" Submit Specified Item	"E" Rejected			

INFORMATIONAL COPY ONLY - NOT FOR BIDDING

SHOP DRAWING TRANSMITTAL

To: Parametrix, Inc.
Address:
Attn:

Transmittal No.: _____

Date: _____

Project: _____ Project No.: _____

Owner: _____ Location: _____

Previous Transmittal No. (if resubmitted) _____

USE ONE FORM PER ITEM SUBMITTED

Qty.	Spec. Paragraph Number	Spec. Page No.	Item Description and Use	Manufacturer	Dwg. No(s).	Approval Status (Engineer)

By this submittal, the Contractor represents that he has determined and verified all field measurements, field construction criteria, materials, catalog numbers and similar data, or will do so, and that he has checked and coordinated each Shop Drawing with the project requirements and the Contract Documents. Deviations from the Contract Documents are noted below.

COMMENTS:

Contractor _____ Signature _____

(THIS SPACE FOR ENGINEER)

To: _____ Date: _____

_____

_____

Enclosed are _____ copies of the above item. Approval status as noted above is in accordance with the following legend:

A. No Exceptions Taken
B. Make Corrections Noted
C. Revise and Resubmit
D. Submit Specified Item
E. Rejected
F. See attached Review Comment Sheet dated _____

PARAMETRIX, INC.
By: _____
cc: _____
_____

INFORMATIONAL COPY ONLY - NOT FOR BIDDING

SITE ASSESSMENT/OBSERVATION WORKSHEET

Project Name: **Project No.:**

Date: _____ **Arrival Time:** _____AM **Departure Time:** _____AM

Weather Conditions:_____

Inspector (name, title): _____

Site Contact (name, title): _____

The source (name, agency, publication) of all data should be provided with the data.

I. PHYSICAL SITE DESCRIPTION

Facility/Project Names: _____

Address:_____

City, State, Zip: _____

County: _____

Property Boundaries (street names, development, woods, lakes, etc.):

North: _____

South: _____

East: _____

West: _____

Methods of Investigation (walk, drive, perimeter, etc.): _____

☐ **Accessed** ☐ **Not Accessed**

II. GENERAL PHYSICAL CONDITIONS

Size of Site (acres/sq. ft.):_____

Shape of Site:_____

Number of Parcels: _____

Land Use:

- **Present Use:**_____
- **Zoned:** _____
- **Percent Occupancy:** _____%
- **Tenant Life (use):** _____
- **Land Cover:** _____
- **Number of Buildings:** _____

INFORMATIONAL COPY ONLY - NOT FOR BIDDING

SITE ASSESSMENT/OBSERVATION WORKSHEET (continued)

Project Name: **Project No.:**

- **Number of Stories:** _____
- **Age of Buildings:** _____
- **Size of Buildings:** _____
- **Materials Building Constructed Of:** _____
- **Condition and Cleanliness of Buildings and Surrounding Area (debris, dumps, equipment clutter):** _____
- **Warnings, Notices, and Permits Displayed (type):** _____
- **Evidence of Past Use (disturbed areas/patched pavement/demolition remains):**

_____

Odors: ☐ **N/A**

- **Description (gasoline, paint, chemical):** _____
- **Location:** _____

Spills: ☐ **N/A**

- **Description (size, composition):** _____
- **Location:** _____

Staining (on walls, ceilings, floors, ground, soil, etc.): ☐ **N/A**

- **Description (size, composition):** _____
- **Location:** _____
- **Color:** _____

Vegetation: ☐ **N/A**

- **Ground Cover (trees, grass, crops, bare):** _____
- **Discoloration (description/location/probably cause):** _____
- **Bare Spots (location/probably cause):** _____
- **Stunted Vegetation Growth (location/description):** _____
- **Increased Vegetation Growth (location/description):** _____

INFORMATIONAL COPY ONLY - NOT FOR BIDDING

SITE ASSESSMENT/OBSERVATION WORKSHEET (continued)

Project Name: **Project No.:**

Topography:

- **Relief (flat, gently rolling, sloping, hilly, karst):** _____
- **Regional and Local Slope:** _____
- **Elevation:** _____
- **Depression/pits/lagoons (description/location):** _____
- **Evidence of Fill (changed topography, immature vegetation, mining activities, description/ location):** _____
- **Source of Fill (source of information):** _____

Hydrology: ☐ N/A

- **Ponds, Streams, Ditches, etc. (location, direction, distance):** _____
- **Wetlands (detailed study required?):** _____
- **Source of Water (where water in streams, rivers, ditches is flowing from):** _____
- **Discharge Points of Water:** _____
- **Site Receives/Surface Water Run-off From (direction):** _____
- **Run-off From Site Flows To (direction into inlets, street, adjacent land):** _____
- **Wastewater Discharge:** _____
- **Flood Plain:** _____

Geology and Hydrogeology (Record Review): ☐ N/A

- **Soil Type (clay, sand, loam):** _____
- **Drainage (good, fair, poor):** _____
- **Depth of Bedrock:** _____
- **Groundwater Depth/Flow Direction:** _____

III. STORAGE ☐ N/A

USTs ☐ N/A

- **Evidence of On-site/Adjacent Site USTs (pipes, vents, pump islands, fill caps, patching):**

_____

INFORMATIONAL COPY ONLY - NOT FOR BIDDING

SITE ASSESSMENT/OBSERVATION WORKSHEET (continued)

Project Name: **Project No.:**

- **Monitor Systems (location):** _____
- **Contents:** _____
- **Tank ID #:** _____
- **Size:** _____
- **Age:** _____
- **Tank Type (steel, fiberglass, composite):** _____
- **Records (tightness, testing, inventory):** _____

ASTs ☐ **N/A**

- **Location:** _____
- **Contents:** _____
- **Age/Condition of Tank/Type of Tank/Size:** _____
- **Evidence of Spills/Leaks/Containment:** _____

IV. PCBs (transformers, florescent light ballasts, hydraulic lifts) ☐ N/A

- **Type/Number of Equipment:** _____
- **ID#:** _____
- **Labeled:** _____
- **Location:** _____
- **Condition of Units:** _____
- **Condition of Surroundings:** _____
- **Owner of Units:** _____
- **PCB Content:** _____

V. EQUIPMENT USED ON SITE ☐ N/A

- **Type of Equipment (processing, maintenance):** _____
- **Location:** _____
- **Chemicals Used by Equipment (process):** _____

INFORMATIONAL COPY ONLY- NOT FOR BIDDING

SITE ASSESSMENT/OBSERVATION WORKSHEET (continued)

Project Name: **Project No.:**

- **Chemicals Used in Cleaning Equipment (maintenance):** _____
- **Cleanliness/Upkeep of Equipment:** _____

VI. UTILITIES (include name of public utility)

- **City/Well Water (age/test results):** ☐ N/A

  _____

- **Sewer Water (leach field, dry wells, age):** ☐ N/A

  _____

- **Septic System (tiles or leach field/age/records):** ☐ N/A

  _____

- **On-site Treatment Facility (lagoons, ponds, age/records):** ☐ N/A

  _____

- **Power (company name/age):** ☐ N/A

  _____

- **Natural Gas (age):** ☐ N/A

  _____

VII. WASTE AND CHEMICAL HANDLING ☐ N/A

- **Size/Numbers/Type of Storage Containers:** _____
- **Location:** _____
- **Contents:** _____
- **Condition of Containers (covered, labeled, corroded):** _____
- **Disposal Methods (who/frequency):** _____
- **Spills/Leaks:** _____
- **On-site Chemicals (MSDS) (get copies):** _____
- **Purpose of Chemicals (process, cleaning):** _____
- **Use of Herbicides or Pesticides:** _____

INFORMATIONAL COPY ONLY - NOT FOR BIDDING

SITE ASSESSMENT/OBSERVATION WORKSHEET (continued)

Project Name: **Project No.:**

VIII. ACMs (Asbestos Containing Materials) ☐ N/A

- **ACM Inspector:** _____
- **Suspect ACMs Observed:** _____
- **Condition:** _____
- **Classification:** _____
- **Location:** _____
- **Quantity:** _____

IX. LEAD/LEAD IN PAINT ☐ N/A

- **Lead in Paint Inspector:** _____
- **Maps Checked:** _____
- **Agency Sources, etc.:** _____
- **Maps Checked:** _____
- **Agency Sources, etc.:** _____

X. WETLANDS/SEISMIC/OIL AND GAS/HYDROGEOLOGIC/ TRANSMISSION TOWER ☐ N/A

- **Maps, Agency Personnel, Records, Surveys Checked:** _____
- **Description (reported/observed):** _____

XI. ADJACENT LAND USE

- **Property Use (north):** _____
- **Property Use (south):** _____
- **Property Use (east):** _____
- **Property Use (west):** _____
- **Potential Concerns (USTs, ASTs, spills, operations, age):** _____

XII. PAST USE OF PROPERTY AND SURROUNDING AREA ☐ N/A

- **Topography:** _____

INFORMATIONAL COPY ONLY - NOT FOR BIDDING

SITE ASSESSMENT/OBSERVATION WORKSHEET (continued)

Project Name: **Project No.:**

- **USTs (for on-site USTs include all information):** _____
- **ASTs (include all information):** _____
- **Solid/Hazardous Waste:** _____
- **Spills and Leaks:** _____

XIII. INTERVIEWS ☐ N/A

- **Property Owner/Tenant (name):** _____
- **Adjacent Properties:** _____
- **Local Regulatory:** _____

XIV. MISCELLANEOUS INFORMATION ☐ N/A

_____

INFORMATIONAL COPY ONLY - NOT FOR BIDDING

SUBMITTAL REVIEW COMMENTS

Date:
Project:
Contractor:
Submittal Title:
Submittal Number:
Specification Section:
Submittal Disposition:
Reviewer:

Review comments are as follows:

INFORMATIONAL COPY ONLY - NOT FOR BIDDING

WORK DIRECTIVE STATUS (INCLUDING CHANGE ORDERS)

OWNER:

PROJECT:

PMX NUMBER:

CONTRACT NUMBER:

DATE:

Number	Description	Date				Original Contract Amount		Notes
		Owner		Contractor				
		Sent to	Signed	Sent to	Signed	Net Change	Contract Total to Date	

INFORMATIONAL COPY ONLY- NOT FOR BIDDING

CONTRACT WORKING DAYS STATUS REPORT

Contract No.: _____ **Project:**

Date: _____

Week Ending	Monday	Tuesday	Wednesday	Thursday	Friday	Saturday	Sunday	Working Days Charged	Unworkable Days Awarded	Nonworkable Days Accrued	Working Days Remaining	Comments

Contract Time Summary:

Notice to Proceed: _____

Contract Working Days: _____

Time Extension by Contract Modification: _____

To Date Unworkable Days Awarded: _____

INFORMATIONAL COPY ONLY - NOT FOR BIDDING

Appendix D

Amendments to the WSDOT Standard Specifications

INFORMATIONAL COPY ONLY - NOT FOR BIDDING

INTRO.AP1

INTRODUCTION

The following Amendments and Special Provisions shall be used in conjunction with the 2016 Standard Specifications for Road, Bridge, and Municipal Construction.

AMENDMENTS TO THE STANDARD SPECIFICATIONS

The following Amendments to the Standard Specifications are made a part of this contract and supersede any conflicting provisions of the Standard Specifications. For informational purposes, the date following each Amendment title indicates the implementation date of the Amendment or the latest date of revision.

Each Amendment contains all current revisions to the applicable section of the Standard Specifications and may include references which do not apply to this particular project.

1-02.AP1

Section 1-02, Bid Procedures and Conditions
April 4, 2016

1-02.4(1) General
The first sentence of the last paragraph is revised to read:

> Any prospective Bidder desiring an explanation or interpretation of the Bid Documents, shall request the explanation or interpretation in writing by close of business on the Thursday preceding the bid opening to allow a written reply to reach all prospective Bidders before the submission of their Bids.

1-02.9 Delivery of Proposal
The last sentence of the third paragraph is revised to read:

> The Contracting Agency will not open or consider any Proposal when the Proposal or Bid deposit is received after the time specified for receipt of Proposals or received in a location other than that specified for receipt of Proposals unless an emergency or unanticipated event interrupts normal work processes of the Contracting Agency so that Proposals cannot be received.

The following new paragraph is inserted before the last paragraph:

> If an emergency or unanticipated event interrupts normal work processes of the Contracting Agency so that Proposals cannot be received at the office designated for receipt of bids as specified in Section 1-02.12 the time specified for receipt of the Proposal will be deemed to be extended to the same time of day specified in the solicitation on the first work day on which the normal work processes of the Contracting Agency resume.

1-02.12 Public Opening of Proposals
This section is supplemented with the following new paragraph:

INFORMATIONAL COPY ONLY - NOT FOR BIDDING

If an emergency or unanticipated event interrupts normal work processes of the Contracting Agency so that Proposals cannot be opened at the time indicated in the call for Bids the time specified for opening of Proposals will be deemed to be extended to the same time of day on the first work day on which the normal work processes of the Contracting Agency resume.

1-06.AP1

Section 1-06, Control of Material
January 4, 2016

This section is supplemented with the following new section and subsections:

1-06.6 Recycled Materials
The Contractor shall make their best effort to utilize recycled materials in the construction of the project; the use of recycled concrete aggregate as specified in Section 1-06.6(1)A is a requirement of the Contract.

The Contractor shall submit a Recycled Material Utilization Plan as a Type 1 Working Drawing within 30 calendar days after the Contract is executed. The plan shall provide the Contractor's anticipated usage of recycled materials for meeting the requirements of these Specifications. The quantity of recycled materials will be provided in tons and as a percentage of the Plan quantity for each material listed in Section 9-03.21(1)E Table on Maximum Allowable Percent (By Weight) of Recycled Material. When a Contract does not include Work that requires the use of a material that is included in the requirements for using materials the Contractor may state in their plan that no recycled materials are proposed for use.

Prior to Physical Completion the Contractor shall report the quantity of recycled materials that were utilized in the construction of the project for each of the items listed in Section 9-03.21. The report shall include hot mix asphalt, recycled concrete aggregate, recycled glass, steel furnace slag and other recycled materials (e.g. utilization of on-site material and aggregates from concrete returned to the supplier). The Contractor's report shall be provided on DOT Form 350-075 Recycled Materials Reporting.

1-06.6(1) Recycling of Aggregate and Concrete Materials

1-06.6(1)A General
The minimum quantity of recycled concrete aggregate shall be 25 percent of the total quantity of aggregate that is incorporated into the Contract for those items listed in Section 9-03.21(1)E Table on Maximum Allowable Percent (By Weight) of Recycled Material that allow the use of recycled concrete aggregate. The percentage of recycled material incorporated into the project for meeting the required percentage will be calculated in tons based on the quantity of recycled concrete used on the entire Contract and not as individual items.

If the Contractor's total cost for Work with recycled concrete aggregate is greater than without the Contractor may choose to not use recycled concrete aggregate. When the Contractor does not meet the minimum requirement of 25 percent recycled concrete aggregate for the Contract due to costs or any other reason the following shall be submitted:

INFORMATIONAL COPY ONLY - NOT FOR BIDDING

1. A cost estimate for each material listed in Section 9-03.21(1)E that is utilized on the Contract. The cost estimate shall include the following:

    a. The estimated costs for the Work for each material with 25 percent recycled concrete aggregate. The cost estimate shall include for each material a copy of the price quote from the supplier with the lowest total cost for the Work.

    b. The estimated costs for the Work for each material without recycled concrete aggregate.

The Contractor's cost estimates shall be submitted as an attachment to the Recycled Materials Reporting form.

1-07.AP1

Section 1-07, Legal Relations and Responsibilities to the Public
April 4, 2016

1-07.1 Laws to be Observed
In the second to last sentence of the third paragraph, "WSDOT" is revised to read "Contracting Agency".

1-07.2(2) State Sales Tax: WAC 458-20-170 – Retail Sales Tax
The last three sentences of the first paragraph are deleted and replaced with the following new sentence:

The Contractor (Prime or Subcontractor) shall include sales or use tax on the purchase or rental of tools, machinery, equipment, or consumable supplies not integrated into the project, in the unit bid prices.

1-07.9(2) Posting Notices
Items 1 and 2 are revised to read:

1. EEOC - P/E-1 (revised 11/09, supplemented 09/15) – **Equal Employment Opportunity IS THE LAW** published by US Department of Labor. Post for projects with federal-aid funding.

2. FHWA 1022 (revised 05/15) – **NOTICE Federal-Aid Project** published by Federal Highway Administration (FHWA). Post for projects with federal-aid funding.

Items 5, 6 and 7 are revised to read:

5. WHD 1420 (revised 02/13) – **Employee Rights and Responsibilities Under The Family And Medical Leave Act** published by US Department of Labor. Post on all projects.

6. WHD 1462 (revised 01/16) – **Employee Polygraph Protection Act** published by US Department of Labor. Post on all projects.

INFORMATIONAL COPY ONLY - NOT FOR BIDDING

7. F416-081-909 (revised 09/15) – **Job Safety and Health Law** published by Washington State Department of Labor and Industries. Post on all projects.

Items 9 and 10 are revised to read:

9. F700-074-909 (revised 06/13) – **Your Rights as a Worker in Washington State** by Washington State Department of Labor and Industries (L&I). Post on all projects.

10. EMS 9874 (revised 10/15) – **Unemployment Benefits** published by Washington State Employment Security Department. Post on all projects.

1-08.AP1

Section 1-08, Prosecution and Progress
January 4, 2016

1-08.1(1) Prompt Payment, Subcontract Completion and Return of Retainage Withheld
In item number 5 of the first paragraph, "WSDOT" is revised to read "Contracting Agency".

1-09.AP1

Section 1-09, Measurement and Payment
April 4, 2016

1-09.6 Force Account
The second sentence of item number 4 is revised to read:

> A "specialized service" is a work operation that is not typically done by worker classifications as defined by the Washington State Department of Labor and Industries and by the Davis Bacon Act, and therefore bills by invoice for work in road, bridge and municipal construction.

5-02.AP5

Section 5-02, Bituminous Surface Treatment
April 4, 2016

5-02.3(2) Preparation of Roadway Surface
This section is supplemented with the following new subsection:

5-02.3(2)E Crack Sealing
Where shown in the Plans, seal cracks and joints in the pavement in accordance with Section 5-04.3(4)A1 and the following:

1. Cracks ¼ inch to 1 inch in width - fill with hot poured sealant.

2. Cracks greater than 1 inch in width – fill with sand slurry.

INFORMATIONAL COPY ONLY - NOT FOR BIDDING

Section 5-04, Hot Mix Asphalt
April 4, 2016

This section (and all subsections) is revised to read:

This Section 5-04 is written in a style which, unless otherwise indicated, shall be interpreted as direction to the Contractor.

5-04.1 Description

This Work consists of providing and placing one or more layers of plant-mixed hot mix asphalt (HMA) on a prepared foundation or base, in accordance with these Specifications and the lines, grades, thicknesses, and typical cross-sections shown in the Plans. The manufacture of HMA may include warm mix asphalt (WMA) processes in accordance with these Specifications.

HMA shall be composed of asphalt binder and mineral materials as required, and may include reclaimed asphalt pavement (RAP) or reclaimed asphalt shingles (RAS), mixed in the proportions specified to provide a homogeneous, stable, and workable mix.

5-04.2 Materials

Provide materials as specified in these sections:

Asphalt Binder	9-02.1(4)
Cationic Emulsified Asphalt	9-02.1(6)
Anti-Stripping Additive	9-02.4
Warm Mix Asphalt Additive	9-02.5
Aggregates	9-03.8
Reclaimed Asphalt Pavement (RAP)	9-03.8(3)B
Reclaimed Asphalt Shingles (RAS)	9-03.8(3)B
Mineral Filler	9-03.8(5)
Recycled Material	9-03.21
Hot Poured Sealant	9-04.2(1)A
Sand Slurry	9-04.2(1)B

5-04.2(1) How to Get an HMA Mix Design on the QPL

Comply with each of the following:

- Develop the mix design in accordance with WSDOT SOP 732.
- Develop a mix design that complies with Sections 9-03.8(2) and 9-03.8(6).
- Develop a mix design no more than 6 months prior to submitting it for QPL evaluation.
- Submit mix designs to the WSDOT State Materials Laboratory in Tumwater, including WSDOT Form 350-042.
- Include representative samples of the materials that are to be used in the HMA production as part of the mix design submittal. See Section 5-04.2(1)A to determine when to include samples of RAP or RAS.

INFORMATIONAL COPY ONLY - NOT FOR BIDDING

- Identify the brand, type, and percentage of anti-stripping additive in the mix design submittal.

- Include with the mix design submittal a certification from the asphalt binder supplier that the anti-stripping additive is compatible with the crude source and the formulation of asphalt binder proposed for use in the mix design.

- Do not include warm mix asphalt (WMA) additives when developing a mix design or submitting a mix design for QPL evaluation. The use of warm mix asphalt (WMA) additives is not part of the process for obtaining approval for listing a mix design on the QPL. Refer to Section 5-04.2(2)B.

The Contracting Agency's basis for approving, testing, and evaluating HMA mix designs for approval on the QPL is dependent on the contractual basis for acceptance of the HMA mixture, as shown in Table 1.

Table 1

Basis for Contracting Agency Evaluation of HMA Mix Designs for Approval on the QPL		
Contractual Basis for Acceptance of HMA Mixture (see Section 5-04.3(9))	**Basis for Contracting Agency Approval of Mix Design for Placement on QPL**	**Contracting Agency Materials Testing for Evaluation of the Mix Design**
Statistical Evaluation, or Nonstatistical Evaluation	WSDOT Standard Practice QC-8	The Contracting Agency will test the mix design materials for compliance with Sections 9-03.8(2) and 9-03.8(6).
Visual Evaluation	Review of Form 350-042 for compliance with Sections 9-03.8(2) and 9-03.8(6)	The Contracting Agency may elect to test the mix design materials, or evaluate in accordance with WSDOT Standard Practice QC-8, at its sole discretion.

If the Contracting Agency approves the mix design, it will be listed on the QPL for 12 consecutive months. The Contracting Agency may extend the 12 month listing provided the Contractor submits a certification letter to the Qualified Products Engineer verifying that the aggregate source and job mix formula (JMF) gradation, and asphalt binder crude source and formulation have not changed. The Contractor may submit the certification no sooner than one month prior to expiration of the initial 12 month mix design approval. Within 7 calendar days of receipt of the Contractor's certification, the Contracting Agency will update the QPL. The maximum duration for approval of a mix design and listing on the QPL will be 24 months from the date of initial approval or as approved by the Engineer.

5-04.2(1)A Mix Designs Containing RAP and/or RAS

Mix designs are classified by the RAP and/or RAS content as shown in Table 2.

INFORMATIONAL COPY ONLY - NOT FOR BIDDING

Table 2

Mix Design Classification Based on RAP/RAS Content	
RAP/RAS Classification	**RAP/RAS Content[1]**
Low RAP/No RAS	0% ≤ RAP% ≤ 20% and RAS% = 0%
High RAP/Any RAS	20% < RAP% ≤ Maximum Allowable RAP[2] and/or 0% < RAS% ≤ Maximum Allowable RAS[2]

[1]Percentages in this table are by total weight of HMA
[2]See Table 4 to determine the limits on the maximum amount RAP and/or RAS.

5-04.2(1)A1 Low RAP/No RAS – Mix Design Submittals for Placement on QPL
For Low RAP/No RAS mix designs, comply with the following additional requirements:

1. Develop the mix design without the inclusion of RAP.

2. The asphalt binder grade shall be the grade indicated in the Bid item name or as otherwise required by the Contract.

3. Do not submit samples of RAP with these mix designs.

4. Testing RAP or RAS stockpiles is not required for obtaining approval for placing these mix designs on the QPL.

5-04.2(1)A2 High RAP/Any RAS - Mix Design Submittals for Placement on QPL
For High RAP/Any RAS mix designs, comply with the following additional requirements:

1. For mix designs with any RAS, test the RAS stockpile (and RAP stockpile if any RAP is in the mix design) in accordance with Table 3.

2. For High RAP mix designs with no RAS, test the RAP stockpile in accordance with Table 3.

3. For mix designs with High RAP/Any RAS, construct a single stockpile for RAP and a single stockpile for RAS and isolate (sequester) these stockpiles from further stockpiling before beginning development of the mix design. Test the RAP and RAS during stockpile construction as required by item 1 and 2 above. Use the test data in developing the mix design, and report the test data to the Contracting Agency on WSDOT Form 350-042 as part of the mix design submittal for approval on the QPL. Account for the reduction in asphalt binder contributed from RAS

INFORMATIONAL COPY ONLY - NOT FOR BIDDING

in accordance with AASHTO PP 78. Do not add to these stockpiles after starting the mix design process.

Table 3

Test Frequency of RAP/RAS During RAP/RAS Stockpile Construction For Approving a High RAP/Any RAS Mix Design for Placement on the QPL		
Test Frequency[1]	Test for	Test Method
• 1/1000 tons of RAP (minimum of 10 per mix design) and • 1/100 tons of RAS (minimum of 10 per mix design)	Asphalt Binder Content and Sieve Analysis of Fine and Coarse Aggregate	FOP for AASHTO T 308 and FOP for WAQTC T 27/T 11

[1]"tons", in this table, refers to tons of the reclaimed material before being incorporated into HMA.

4. Limit the amount of RAP and/or RAS used in a High RAP/Any RAS mix design by the amount of binder contributed by the RAP and/or RAS, in accordance with Table 4.

Table 4

Maximum Amount of RAP and/or RAS in HMA Mixture	
Maximum Amount of Binder Contributed from:	
RAP	RAS
40%[1] minus contribution of binder from RAS	20%[2]

[1] Calculated as the weight of asphalt binder contributed from the RAP as a percentage of the total weight of asphalt binder in the mixture.
[2] Calculated as the weight of asphalt binder contributed from the RAS as a percentage of the total weight of asphalt binder in the mixture.

5. Develop the mix design including RAP, RAS, recycling agent, and new binder.

6. Extract, recover, and test the asphalt residue from the RAP and RAS stockpiles to determine the percent of recycling agent and/or grade of new asphalt binder needed to meet but not exceed the performance grade (PG) of asphalt binder required by the Contract.

   a. Perform the asphalt extraction in accordance with AASHTO T 164 or ASTM D 2172 using reagent grade trichloroethylene.

   b. Perform the asphalt recovery in accordance with AASHTO R 59 or ASTM D 1856.

INFORMATIONAL COPY ONLY NOT FOR BIDDING

c. Test the recovered asphalt residue in accordance with AASHTO R 29 to determine the asphalt binder grade in accordance with Section 9-02.1(4).

d. After determining the recovered asphalt binder grade, determine the percent of recycling agent and/or grade of new asphalt binder in accordance with ASTM D 4887.

e. Test the final blend of recycling agent, binder recovered from the RAP and RAS, and new asphalt binder in accordance with AASHTO R 29. The final blended binder shall meet but not exceed the performance grade of asphalt binder required by the Contract and comply with the requirements of Section 9-02.1(4).

7. Include the following test data with the mix design submittal:

a. All test data from RAP and RAS stockpile construction.

b. All data from testing the recovered and blended asphalt binder.

8. Include representative samples of the following with the mix design submittal:

a. RAP and RAS.

b. 100 grams of recovered asphalt residue from the RAP and RAS that are to be used in the HMA production.

5-04.2(1)B Commercial HMA - Mix Design Submittal for Placement on QPL

For HMA used in the Bid item Commercial HMA, in addition to the requirements of 5-04.2(1) identify the following in the submittal:

1. Commercial HMA

2. Class of HMA

3. Performance grade of binder

4. Equivalent Single Axle Load (ESAL)

The Contracting Agency may elect to approve Commercial HMA mix designs without evaluation.

5-04.2(1)C Mix Design Resubmittal for QPL Approval

Develop a new mix design and resubmit for approval on the QPL when any of the following changes occur. When these occur, discontinue using the mix design until after it is reapproved on the QPL.

1. Change in the source of crude petroleum used in the asphalt binder.

INFORMATIONAL COPY ONLY - NOT FOR BIDDING

2. Changes in the asphalt binder refining process.

3. Changes in additives or modifiers in the asphalt binder.

4. Changes in the anti-strip additive, brand, type or quantity.

5. Changes to the source of material for aggregate.

6. Changes to the job mix formula that exceed the amounts as described in item 2 of Section 9-03.8(7), unless otherwise approved by the Engineer.

7. Changes in the percentage of material from a stockpile, when such changes exceed 5% of the total aggregate weight.

    a. Changes to the percentage of material from a stockpile will be calculated based on the total aggregate weight (not including the weight of RAP) for Low RAP/No RAS mix designs.

    b. For High RAP/Any RAS mix designs, changes in the percentage of material from a stockpile will be based on total aggregate weight including the weight of RAP (and/or RAS when included in the mixture).

Prior to making any change in the amount of RAS in an approved mix design, notify the Engineer for determination of whether a new mix design is required, and obtain the Engineer's approval prior to implementing such changes.

5-04.2(2) Mix Design – Obtaining Project Approval

Use only mix designs listed on the Qualified Products List (QPL). Submit WSDOT Form 350-041 to the Engineer to request approval to use a mix design from the QPL. Changes to the job mix formula (JMF) that have been approved on other contracts may be included. The Engineer may reject a request to use a mix design if production of HMA using that mix design on any contract is not in compliance with Section 5-04.3(11)D, E, F, and G for mixture or compaction.

5-04.2(2)A Changes to the Job Mix Formula

The approved mix design obtained from the QPL will be considered the starting job mix formula (JMF) and shall be used as the initial basis for acceptance of HMA mixture, as detailed in Section 5-04.3(9).

During production the Contractor may request to adjust the JMF. Any adjustments to the JMF will require approval of the Engineer and shall be made in accordance with item 2 of Section 9-03.8(7). After approval by the Engineer, such adjusted JMF's shall constitute the basis for acceptance of the HMA mixture.

5-04.2(2)B Using Warm Mix Asphalt Processes

The Contractor may, at the Contractor's discretion, elect to use warm mix asphalt (WMA) processes for producing HMA. WMA processes include

INFORMATIONAL COPY ONLY - NOT FOR BIDDING

organic additives, chemical additives, and foaming. The use of WMA is subject to the following:

- Do not use WMA processes in the production of High RAP/Any RAS mixtures.
- Before using WMA processes, obtain the Engineer's approval using WSDOT Form 350-076 to describe the proposed WMA process.

5-04.3 Construction Requirements

5-04.3(1) Weather Limitations

Do not place HMA for wearing course on any Traveled Way beginning October 1st through March 31st of the following year, without written concurrence from the Engineer.

Do not place HMA on any wet surface, or when the average surface temperatures are less than those specified in Table 5, or when weather conditions otherwise prevent the proper handling or finishing of the HMA.

Table 5

Minimum Surface Temperature for Paving		
Compacted Thickness (Feet)	**Wearing Course**	**Other Courses**
Less than 0.10	55°F	45°F
0.10 to 0.20	45°F	35°F
More than 0.20	35°F	35°F

5-04.3(2) Paving Under Traffic

These requirements apply when the Roadway being paved is open to traffic.

In hot weather, the Engineer may require the application of water to the pavement to accelerate the finish rolling of the pavement and to shorten the time required before reopening to traffic.

During paving operations, maintain temporary pavement markings throughout the project. Install temporary pavement markings on the Roadway prior to opening to traffic. Temporary pavement markings shall comply with Section 8-23.

5-04.3(3) Equipment

5-04.3(3)A Mixing Plant

Equip mixing plants as follows.

1. **Use tanks for storage and preparation of asphalt binder which:**

   - Heat the contents by means that do not allow flame to contact the contents or the tank, such as by steam or electricity.

   - Heat and hold contents at the required temperatures.

   - Continuously circulate contents to provide uniform temperature and consistency during the operating period.

INFORMATIONAL COPY ONLY - NOT FOR BIDDING

- Provide an asphalt binder sampling valve, in either the storage tank or the supply line to the mixer.

2. **Provide thermometric equipment:**

   - In the asphalt binder feed line near the charging valve at the mixer unit, capable of detecting temperature ranges expected in the HMA and in a location convenient and safe for access by Inspectors.

   - At the discharge chute of the drier to automatically register or indicate the temperature of the heated aggregates, and situated in full view of the plant operator.

3. **When heating asphalt binder:**

   - Do not exceed the maximum temperature of the asphalt binder recommended by the asphalt binder supplier.

   - Avoid local variations in heating.

   - Provide a continuous supply of asphalt binder to the mixer at a uniform average temperature with no individual variations exceeding 25°F.

4. **Provide a mechanical sampler for sampling mineral materials that:**

   - Meets the crushing or screening requirements of Section 1-05.6.

5. **Provide HMA sampling equipment that complies with WSDOT SOP T-168.**

   - Use a mechanical sampling device installed between the discharge of the silo and the truck transport, approved by the Engineer, or

   - Platforms or devices to enable sampling from the truck transport without entering the truck transport for sampling HMA.

6. **Provide for setup and operation of the Contracting Agency's field testing:**

   - As required in Section 3-01.2(2).

7. **Provide screens or a lump breaker:**

   - When using any RAP or any RAS, to eliminate oversize RAP or RAS particles from entering the pug mill or drum mixer.

INFORMATIONAL COPY ONLY - NOT FOR BIDDING

5-04.3(3)B Hauling Equipment

Provide HMA hauling equipment with tight, clean, smooth metal beds and a cover of canvas or other suitable material of sufficient size to protect the HMA from adverse weather. Securely attach the cover to protect the HMA whenever the weather conditions during the work shift include, or are forecast to include, precipitation or an air temperature less than 45°F.

Prevent HMA from adhering to the hauling equipment. Spray metal beds with an environmentally benign release agent. Drain excess release agent prior to filling hauling equipment with HMA. Do not use petroleum derivatives or other coating material that contaminate or alter the characteristics of the HMA. For hopper trucks, operate the conveyer during the process of applying the release agent.

5-04.3(3)C Pavers

Use self-contained, power-propelled pavers provided with an internally heated vibratory screed that is capable of spreading and finishing courses of HMA in lane widths required by the paving section shown in the Plans.

When requested by the Engineer, provide written certification that the paver is equipped with the most current equipment available from the manufacturer for the prevention of segregation of the coarse aggregate particles. The certification shall list the make, model, and year of the paver and any equipment that has been retrofitted to the paver.

Operate the screed in accordance with the manufacturer's recommendations and in a manner to produce a finished surface of the required evenness and texture without tearing, shoving, segregating, or gouging the mixture. Provide a copy of the manufacturer's recommendations upon request by the Contracting Agency. Extensions to the screed will be allowed provided they produce the same results, including ride, density, and surface texture as obtained by the primary screed. In the Travelled Way do not use extensions without both augers and an internally heated vibratory screed.

Equip the paver with automatic screed controls and sensors for either or both sides of the paver. The controls shall be capable of sensing grade from an outside reference line, sensing the transverse slope of the screed, and providing automatic signals that operate the screed to maintain the desired grade and transverse slope. Construct the sensor so it will operate from a reference line or a mat referencing device. The transverse slope controller shall be capable of maintaining the screed at the desired slope within plus or minus 0.1 percent.

Equip the paver with automatic feeder controls, properly adjusted to maintain a uniform depth of material ahead of the screed.

Manual operation of the screed is permitted in the construction of irregularly shaped and minor areas. These areas include, but are not limited to, gore areas, road approaches, tapers and left-turn channelizations.

When specified in the Contract, provide reference lines for vertical control. Place reference lines on both outer edges of the Traveled Way of each

INFORMATIONAL COPY ONLY - NOT FOR BIDDING

Roadway. Horizontal control utilizing the reference line is permitted. Automatically control the grade and slope of intermediate lanes by means of reference lines or a mat referencing device and a slope control device. When the finish of the grade prepared for paving is superior to the established tolerances and when, in the opinion of the Engineer, further improvement to the line, grade, cross-section, and smoothness can best be achieved without the use of the reference line, a mat referencing device may be substituted for the reference line. Substitution of the device will be subject to the continued approval of the Engineer. A joint matcher may be used subject to the approval of the Engineer. The reference line may be removed after completion of the first course of HMA when approved by the Engineer. Whenever the Engineer determines that any of these methods are failing to provide the necessary vertical control, the reference lines will be reinstalled by the Contractor.

Furnish and install all pins, brackets, tensioning devices, wire, and accessories necessary for satisfactory operation of the automatic control equipment.

If the paving machine in use is not providing the required finish, the Engineer may suspend Work as allowed by Section 1-08.6.

5-04.3(3)D Material Transfer Device or Material Transfer Vehicle

Use a material transfer device (MTD) or material transfer vehicle (MTV) to deliver the HMA from the hauling equipment to the paving machine for any lift in (or partially in) the top 0.30 feet of the pavement section used in traffic lanes. However, an MTD/V is not required for HMA placed in irregularly shaped and minor areas such as tapers and turn lanes, or for HMA mixture that is accepted by Visual Evaluation. At the Contractor's request the Engineer may approve paving without an MTD/V; the Engineer will determine if an equitable adjustment in cost or time is due. If a windrow elevator is used, the Engineer may limit the length of the windrow in urban areas or through intersections.

To be approved for use, an MTV:

1. Shall be a self-propelled vehicle, separate from the hauling vehicle or paver.

2. Shall not connected to the hauling vehicle or paver.

3. May accept HMA directly from the haul vehicle or pick up HMA from a windrow.

4. Shall mix the HMA after delivery by the hauling equipment and prior to placement into the paving machine.

5. Shall mix the HMA sufficiently to obtain a uniform temperature throughout the mixture.

To be approved for use, an MTD:

1. Shall be positively connected to the paver.

INFORMATIONAL COPY ONLY - NOT FOR BIDDING

2. May accept HMA directly from the haul vehicle or pick up HMA from a windrow.

3. Shall mix the HMA after delivery by the hauling equipment and prior to placement into the paving machine.

4. Shall mix the HMA sufficiently to obtain a uniform temperature throughout the mixture.

5-04.3(3)E Rollers

Operate rollers in accordance with the manufacturer's recommendations. When requested by the Engineer, provide a Type 1 Working Drawing of the manufacturer's recommendation for the use of any roller planned for use on the project. Do not use rollers that crush aggregate, produce pickup or washboard, unevenly compact the surface, displace the mix, or produce other undesirable results.

5-04.3(4) Preparation of Existing Paved Surfaces

Before constructing HMA on an existing paved surface, the entire surface of the pavement shall be clean. Entirely remove all fatty asphalt patches, grease drippings, and other deleterious substances from the existing pavement to the satisfaction of the Engineer. Thoroughly clean all pavements or bituminous surfaces of dust, soil, pavement grindings, and other foreign matter. Thoroughly remove any cleaning or solvent type liquids used to clean equipment spilled on the pavement before paving proceeds. Fill all holes and small depressions with an appropriate class of HMA. Level and thoroughly compact the surface of the patched area.

Apply a uniform coat of asphalt (tack coat) to all paved surfaces on which any course of HMA is to be placed or abutted. Apply tack coat to cover the cleaned existing pavement with a thin film of residual asphalt free of streaks and bare spots. Apply a heavy application of tack coat to all joints. For Roadways open to traffic, limit the application of tack coat to surfaces that will be paved during the same working shift. Equip the spreading equipment with a thermometer to indicate the temperature of the tack coat material.

Do not operate equipment on tacked surfaces until the tack has broken and cured. Repair tack coat damaged by the Contractor's operation, prior to placement of the HMA.

Unless otherwise approved by the Engineer, use CSS-1, CSS-1h, or Performance Graded (PG) asphalt for tack coat. The CSS-1 and CSS-1h emulsified asphalt may be diluted with water at a rate not to exceed one part water to one part emulsified asphalt. Do not allow the tack coat material to exceed the maximum temperature recommended by the asphalt supplier.

When shown in the Plans, prelevel uneven or broken surfaces over which HMA is to be placed by using an asphalt paver, a motor patrol grader, or by hand raking, as approved by the Engineer.

INFORMATIONAL COPY ONLY - NOT FOR BIDDING

5-04.3(4)A Crack Sealing

5-04.3(4)A1 General

When the Proposal includes a pay item for crack sealing, seal all cracks ¼ inch in width and greater.

Cleaning: Ensure that cracks are thoroughly clean, dry and free of all loose and foreign material when filling with crack sealant material. Use a hot compressed air lance to dry and warm the pavement surfaces within the crack immediately prior to filling a crack with the sealant material. Do not overheat pavement. Do not use direct flame dryers. Routing cracks is not required.

Sand Slurry: For cracks that are to be filled with sand slurry, thoroughly mix the components and pour the mixture into the cracks until full. Add additional CSS-1 emulsified asphalt to the sand slurry as needed for workability to ensure the mixture will completely fill the crack. Strike off the sand slurry flush with the existing pavement surface and allow the mixture to cure. Top off cracks that were not completely filled with additional sand slurry. Do not place the HMA overlay until the slurry has fully cured.

Hot Poured Sealant: For cracks that are to be filled with hot poured sealant, apply the material in accordance with these requirements and the manufacturer's recommendations. Furnish a Type 1 Working Drawing of the manufacturer's recommendations to the Engineer prior to the start of work, including the manufacturer's recommended heating time and temperatures, allowable storage time and temperatures after initial heating, allowable reheating criteria, and application temperature range. Confine hot poured sealant material within the crack. Clean any overflow of sealant from the pavement surface. If, in the opinion of the Engineer, the Contractor's method of sealing the cracks with hot poured sealant results in an excessive amount of material on the pavement surface, stop and correct the operation to eliminate the excess material.

5-04.3(4)A2 Crack Sealing Areas Prior to Paving

In areas where HMA will be placed, use sand slurry to fill the cracks.

5-04.3(4)A3 Crack Sealing Areas Not to be Paved

In areas where HMA will not be placed, fill the cracks as follows:

1. Cracks ¼ inch to 1 inch in width - fill with hot poured sealant.

2. Cracks greater than 1 inch in width – fill with sand slurry.

5-04.3(4)B Soil Residual Herbicide

Where shown in the Plans, apply one application of an approved soil residual herbicide. Comply with Section 8-02.3(3)B. Complete paving within 48 hours of applying the herbicide.

Use herbicide registered with the Washington State Department of Agriculture for use under pavement. Before use, obtain the Engineer's approval of the

INFORMATIONAL COPY ONLY - NOT FOR BIDDING

herbicide and the proposed rate of application. Include the following information in the request for approval of the material:

1. Brand Name of the Material,
2. Manufacturer,
3. Environmental Protection Agency (EPA) Registration Number,
4. Material Safety Data Sheet, and
5. Proposed Rate of Application.

5-04.3(4)C Pavement Repair

Excavate pavement repair areas and backfill these with HMA in accordance with the details shown in the Plans and as staked. Conduct the excavation operations in a manner that will protect the pavement that is to remain. Repair pavement not designated to be removed that is damaged as a result of the Contractor's operations to the satisfaction of the Engineer at no cost to the Contracting Agency. Excavate only within one lane at a time unless approved otherwise by the Engineer. Do not excavate more area than can be completely backfilled and compacted during the same shift.

Unless otherwise shown in the Plans or determined by the Engineer, excavate to a depth of 1.0 feet. The Engineer will make the final determination of the excavation depth required.

The minimum width of any pavement repair area shall be 40 inches unless shown otherwise in the Plans. Before any excavation, sawcut the perimeter of the pavement area to be removed unless the pavement in the pavement repair area is to be removed by a pavement grinder.

Excavated materials shall be the property of the Contractor and shall be disposed of in a Contractor-provided site off the Right of Way or used in accordance with Sections 2-02.3(3) or 9-03.21.

Apply a heavy application of tack coat to all surfaces of existing pavement in the pavement repair area, in accordance with Section 5-04.3(4).

Place the HMA backfill in lifts not to exceed 0.35-foot compacted depth. Thoroughly compact each lift by a mechanical tamper or a roller.

5-04.3(5) Producing/Stockpiling Aggregates, RAP, & RAS

Produce aggregate in compliance with Section 3-01. Comply with Section 3-02 for preparing stockpile sites, stockpiling, and removing from stockpile each of the following: aggregates, RAP, and RAS. Provide sufficient storage space for each size of aggregate, RAP and RAS. Fine aggregate or RAP may be uniformly blended with the RAS as a method of preventing the agglomeration of RAS particles. Remove the aggregates, RAP and RAS from stockpile(s) in a manner that ensures minimal segregation when being moved to the HMA plant for processing into the final mixture. Keep different aggregate sizes separated until they have been delivered to the HMA plant.

INFORMATIONAL COPY ONLY - NOT FOR BIDDING

5-04.3(5)A Stockpiling RAP or RAS for High RAP/Any RAS Mixes
Do not place any RAP or RAS into a stockpile which has been sequestered for a High RAP/Any RAS mix design. Do not incorporate any RAP or RAS into a High RAP/Any RAS mixture from any source other than the stockpile which was sequestered for approval of that particular High RAP/Any RAS mix design.

RAP that is used in a Low RAP/No RAS mix is not required to come from a sequestered stockpile.

5-04.3(6) Mixing
The asphalt supplier shall introduce anti-stripping additive, in the amount designated on the QPL for the mix design, into the asphalt binder prior to shipment to the asphalt mixing plant.

Anti-strip is not required for temporary work that will be removed prior to Physical Completion.

Use asphalt binder of the grade, and from the supplier, in the approved mix design.

Prior to introducing reclaimed materials into the asphalt plant, remove wire, nails, and other foreign material. Discontinue use of the reclaimed material if the Engineer, in their sole discretion, determines the wire, nails, or other foreign material to be excessive.

Size RAP and RAS prior to entering the mixer to provide uniform and thoroughly mixed HMA. If there is evidence of the RAP or RAS not breaking down during the heating and mixing of the HMA, immediately suspend the use of the RAP or RAS until changes have been approved by the Engineer.

After the required amount of mineral materials, RAP, RAS, new asphalt binder and recycling agent have been introduced into the mixer, mix the HMA until complete and uniform coating of the particles and thorough distribution of the asphalt binder throughout the mineral materials, RAP and RAS is ensured.

Upon discharge from the mixer, ensure that the temperature of the HMA does not exceed the optimum mixing temperature shown on the approved Mix Design Report by more than 25°F, or as approved by the Engineer. When a WMA additive is included in the manufacture of HMA, do not heat the WMA additive (at any stage of production including in binder storage tanks) to a temperature higher than the maximum recommended by the manufacturer of the WMA additive.

A maximum water content of 2 percent in the mix, at discharge, will be allowed providing the water causes no problems with handling, stripping, or flushing. If the water in the HMA causes any of these problems, reduce the moisture content.

During the daily operation, HMA may be temporarily held in approved storage facilities. Do not incorporate HMA into the Work that has been held for more

INFORMATIONAL COPY ONLY - NOT FOR BIDDING

than 24 hours after mixing. Provide an easily readable, low bin-level indicator on the storage facility that indicates the amount of material in storage. Waste the HMA in storage when the top level of HMA drops below the top of the cone of the storage facility, except as the storage facility is being emptied at the end of the working shift. Dispose of rejected or waste HMA at no expense to the Contracting Agency.

5-04.3(7) Spreading and Finishing

Do not exceed the maximum nominal compacted depth of any layer in any course, as shown in Table 6, unless approved by the Engineer:

Table 6

Maximum Nominal Compacted Depth of Any Layer		
HMA Class	**Wearing Course**	**Other than Wearing Course**
1 inch	0.35 feet	0.35 feet
¾ and ½ inch	0.30 feet	0.35 feet
⅜ inch	0.15 feet	0.15 feet

Use HMA pavers complying with Section 5-04.3(3) to distribute the mix. On areas where irregularities or unavoidable obstacles make the use of mechanical spreading and finishing equipment impractical, the paving may be done with other equipment or by hand.

When more than one JMF is being utilized to produce HMA, place the material produced for each JMF with separate spreading and compacting equipment. Do not intermingle HMA produced from more than one JMF. Each strip of HMA placed during a work shift shall conform to a single JMF established for the class of HMA specified unless there is a need to make an adjustment in the JMF.

5-04.3(8) Aggregate Acceptance Prior to Incorporation in HMA

Sample aggregate for meeting the requirements of Section 3-04 prior to being incorporated into HMA. (The acceptance data generated for the Section 3-04 acceptance analysis will not be commingled with the acceptance data generated for the Section 5-04.3(9) acceptance analysis.) Aggregate acceptance samples shall be taken as described in Section 3-04. Aggregate acceptance testing will be performed by the Contracting Agency. Aggregate contributed from RAP and/or RAS will not be evaluated under Section 3-04.

For aggregate that will be used in HMA mixture which will be accepted by either Statistical or Nonstatistical Evaluation, the Contracting Agency's acceptance of the aggregate will be based on:

1. Samples taken prior to mixing with asphalt binder, RAP, or RAS;

2. Testing for the materials properties of fracture, uncompacted void content, and sand equivalent;

3. Evaluation by the Contracting Agency in accordance with Section 3-04, including price adjustments as described therein.

INFORMATIONAL COPY ONLY - NOT FOR BIDDING

For aggregate that will be used in HMA which will be accepted by Visual Evaluation, evaluation in accordance with items 1, 2, and 3 above is at the discretion of the Engineer.

5-04.3(9) HMA Mixture Acceptance

The Contracting Agency will evaluate HMA mixture for acceptance by one of three methods as determined from the criteria in Table 7.

Table 7

Basis of Acceptance for HMA Mixture			
	Visual Evaluation	**Nonstatistical Evaluation**	**Statistical Evaluation**
Criteria for Selecting the Evaluation Method	• Commercial HMA placed at any location • Any HMA placed in: ○ sidewalks ○ road approaches ○ ditches ○ slopes ○ paths ○ trails ○ gores ○ prelevel ○ temporary pavement[1] ○ pavement repair • Other nonstructural applications of HMA as approved by the Engineer	• All HMA mixture of the same class and PG binder grade with a Proposal quantity less than 4,000 tons. (Exclude the tonnage of HMA mixture accepted by Visual Evaluation.)	• All HMA mixture other than that accepted by Visual or Nonstatistical Evaluation

[1] Temporary pavement is HMA that will be removed before Physical Completion of the Contract.

5-04.3(9)A Mixture Acceptance – Test Section

This Section applies to HMA mixture accepted by Statistical Evaluation and mixture accepted by Nonstatistical Evaluation. A test section is not allowed for HMA accepted by Visual Evaluation.

The purpose of a test section is to determine, at the beginning of paving, whether or not the Contractor's mix design and production processes will produce HMA meeting the Contract requirements related to mixture.

Use Table 8 to determine when a test section is required, optional, or not allowed, and to determine when test sections may end for an individual mix design. Each mix design will be evaluated independently for the test section requirements.

Construct HMA mixture test sections at the beginning of paving, using at least 600 tons and a maximum of 1,000 tons or as approved by the Engineer. Each test section shall be constructed in one continuous operation. Each test section shall be considered a lot. The mixture in each

INFORMATIONAL COPY ONLY - NOT FOR BIDDING

test section will be evaluated based on the criteria in Table 9 to determine if test sections for that mix design may stop.

If more than one test section is required, each test section shall be separately by the criteria in table 8 and 9.

Table 8

Criteria for Conducting and Evaluating HMA Mix Texture Sections (For HMA Mixture Accepted by Statistical or Nonstatistical Evaluation)		
	High RAP/Any RAS	**Low RAP/No RAS**
Is Mixture Test Section Optional or Mandatory?	Mandatory[1]	At Contractor's Option[3]
Waiting period after paving the test section.	4 calendar days[2]	4 calendar days[2]
What Must Happen to Stop Performing Test Sections?	Meet "Results Required to Stop Performing Test Sections" in Table 9 for High RAP/Any RAS.	Provide samples and respond to WSDOT test results required by Table 9 for Low RAP/No RAS.

[1]If a mix design has produced an acceptable test section on a previous contract (paved in the same calendar year, from the same plant, using the same JMF) the test section may be waived if approved by the Engineer.

[2]This is to provide time needed by the Contracting Agency to complete testing and the Contractor to adjust the mixture in response to those test results. Paving may resume when this is done.

[3]For HMA with Low RAP/No RAS, which is accepted by Nonstatistical Evaluation, a test section is not allowed.

Table 9

Results Required to Stop Performing HMA Mixture Test Sections[1] (For HMA Mixture Accepted by Statistical or Nonstatistical Evaluation)		
Test Property	**Type of HMA**	
	High RAP/Any RAS	**Low RAP/No RAS**
Gradation	Minimum PF_i of 0.95 based on the criteria in Section 5-04.3(9)B4[2]	None[4]
Asphalt Binder	Minimum PF_i of 0.95 based on the criteria in Section 5-04.3(9)B4[2]	None[4]
V_a	Minimum PF_i of 0.95 based on the criteria in Section 5-04.3(9)B4[2]	None[4]

INFORMATIONAL COPY ONLY - NOT FOR BIDDING

Hamburg Wheel Track Indirect Tensile Strength	Meet requirements of Section 9-03.8(2).[3]	These tests will not be done as part of Test Section.
Sand Equivalent Uncompacted Void Content Fracture	Meet requirements of Section 9-03.8(2).[3]	None[3]

[1]In addition to the requirements of this table, acceptance of the HMA mixture used in each test section is subject to the acceptance criteria and price adjustments for Statistical Evaluation or Non-statistical Evaluation (see Table 7).

[2]Divide the test section lot into three sublots, approximately equal in size. Take one sample from each sublot, and test each sample for all of the properties in the first column.

[3]Take one sample for each test section lot. Test the sample for all of the properties in the first column.

[4]Divide the test section lot into three sublots, approximately equal in size. Take one sample from each sublot, and test each sample for all of the properties in the first column. There are no criteria for discontinuing test sections for these mixes; however, the contractor must comply with Section 5-04.3(11)F before resuming paving.

5-04.3(9)B Mixture Acceptance – Statistical Evaluation

5-04.3(9)B1 Mixture Statistical Evaluation – Lots and Sublots

HMA mixture which is accepted by Statistical Evaluation will be evaluated by the Contracting Agency dividing that HMA tonnage into mixture lots, and each mixture lot will be evaluated using stratified random sampling by the Contracting Agency sub-dividing each mixture lot into mixture sublots. All mixture in a mixture lot shall be of the same mix design. The mixture sublots will be numbered in the order in which the mixture (of a particular mix design) is paved.

Each mixture lot comprises a maximum of 15 mixture sublots, except:

- The final mixture lot of each mix design on the Contract will comprise a maximum of 25 sublots.
- A mixture lot for a test section, which will consist of the three sublots and corresponding test results used in evaluating the test section for gradation, asphalt binder, and Va.

Each mixture sublot shall be approximately uniform in size with the maximum mixture sublot size as specified in Table 10. The quantity of material represented by the final mixture sublot of the project, for each mix design on the project, may be increased to a maximum of two times the mixture sublot quantity calculated. Should a lot accepted by statistical evaluation contain fewer than three sublots, the HMA will be accepted in accordance with nonstatistical evaluation.

INFORMATIONAL COPY ONLY - NOT FOR BIDDING

Table 10

Maximum HMA Mixture Sublot Size For HMA Accepted by Statistical Evaluation	
HMA Original Plan Quantity (tons)[1]	**Maximum Sublot Size (tons)[2]**
< 20,000	1,000
20,000 to 30,000	1,500
>30,000	2,000

[1] "Plan quantity" means the plan quantity of all HMA of the same class and binder grade which is accepted by Statistical Evaluation.

[2] The maximum sublot size for each combination of HMA class and binder grade shall be calculated separately.

- For a mixture lot in progress with a mixture CPF less than 0.75, a new mixture lot will begin at the Contractor's request after the Engineer is satisfied that material conforming to the Specifications can be produced. See also Section 5-04.3(11)F.

- If, before completing a mixture lot, the Contractor requests a change to the JMF which is approved by the Engineer, the mixture produced in that lot after the approved change will be evaluated on the basis of the changed JMF, and the mixture produced in that lot before the approved change will be evaluated on the basis of the unchanged JMF; however, the mixture before and after the change will be evaluated in the same lot. Acceptance of subsequent mixture lots will be evaluated on the basis of the changed JMF.

5-04.3(9)B2 Mixture Statistical Evaluation – Sampling
Comply with Section 1-06.2(1).

Samples of HMA mixture which is accepted by Statistical Evaluation will be randomly selected from within each sublot, with one sample per sublot. The Engineer will determine the random sample location using WSDOT Test Method T 716. The Contractor shall obtain the sample when ordered by the Engineer. The Contractor shall sample the HMA mixture in the presence of the Engineer and in accordance with FOP for WAQTC T 168.

5-04.3(9)B3 Mixture Statistical Evaluation – Acceptance Testing
Comply with Section 1-06.2(1).

The Contracting Agency will test the mixture sample from each sublot (including sublots in a test section) for the properties shown in Table 11.

INFORMATIONAL COPY ONLY - NOT FOR BIDDING

Table 11

Testing Required for each HMA Mixture Sublot		
Test	**Procedure**	**Performed by**
V_a	WSDOT SOP 731	Engineer
Asphalt Binder Content	FOP for AASHTO T 308	Engineer
Gradation: Percent Passing 1½″, 1″, ¾″, ½″, ⅜″, No. 4, No. 8, No. 200	FOP for WAQTC T 27/T 11	Engineer

The mixture samples and tests taken for the purpose of determining acceptance of the test section (as described in Section 5-04.3(9)A) shall also be used as the test results for acceptance of the mixture described in 5-04.3(9)B3, 5-04.3(9)B4, 5-04.3(9)B5, and 5-04.3(9)B6.

5-04.3(9)B4 Mixture Statistical Evaluation – Pay Factors
Comply with Section 1-06.2(2).

The Contracting Agency will determine a pay factor (PF_i) for each of the properties in Table 11, for each mixture lot, using the quality level analysis in Section 1-06.2(2)D. For Gradation, a pay factor will be calculated for each of the sieve sizes listed in Table 11 which is equal to or smaller than the maximum allowable aggregate size (100 percent passing sieve) of the HMA mixture. The USL and LSL shall be calculated using the Job Mix Formula Tolerances (for Statistical Evaluation) in Section 9-03.8(7).

If a constituent is not measured in accordance with these Specifications, its individual pay factor will be considered 1.00 in calculating the Composite Pay Factor (CPF).

5-04.3(9)B5 Mixture Statistical Evaluation – Composite Pay Factors (CPF)
Comply with Section 1-06.2(2).

In accordance with Section 1-06.2(2)D4, the Contracting Agency will determine a Composite Pay Factor (CPF) for each mixture lot from the pay factors calculated in Section 5-04.3(9)B4, using the price adjustment factors in Table 12. Unless otherwise specified, the maximum CPF for HMA mixture shall be 1.05.

Table 12

HMA Mixture Price Adjustment Factors	
Constituent	**Factor "f"**
All aggregate passing: 1½″, 1″, ¾″, ½″, ⅜″ and No.4 sieves	2
All aggregate passing No. 8 sieve	15
All aggregate passing No. 200 sieve	20
Asphalt binder	40
Air Voids (V_a)	20

INFORMATIONAL COPY ONLY - NOT FOR BIDDING

5-04.3(9)B6 Mixture Statistical Evaluation – Price Adjustments
For each HMA mixture lot, a Job Mix Compliance Price Adjustment will be determined and applied, as follows:

JMCPA = [0.60 x (CPF – 1.00)] x Q x UP

Where

JMCPA = Job Mix Compliance Price Adjustment for a given lot of mixture ($)
CPF = Composite Pay factor for a given lot of mixture (maximum is 1.05)
Q = Quantity in a given lot of mixture (tons)
UP = Unit price of the HMA in a given lot of mixture ($/ton)

5-04.3(9)B7 Mixture Statistical Evaluation – Retests
The Contractor may request that a mixture sublot be retested. To request a retest, submit a written request to the Contracting Agency within 7 calendar days after the specific test results have been posted to the website or emailed to the Contractor, whichever occurs first. The Contracting Agency will send a split of the original acceptance sample for testing by the Contracting Agency to either the Region Materials Laboratory or the State Materials Laboratory as determined by the Engineer. The Contracting Agency will not test the split of the sample with the same equipment or by the same tester that ran the original acceptance test. The sample will be tested for a complete gradation analysis, asphalt binder content, and V_a, and the results of the retest will be used for the acceptance of the HMA mixture in place of the original mixture sublot sample test results. The cost of testing will be deducted from any monies due or that may come due the Contractor under the Contract at the rate of $250 per sample.

5-04.3(9)C Mixture Acceptance – Nonstatistical Evaluation
5-04.3(9)C1 Mixture Nonstatistical Evaluation – Lots, Sublots, Sampling, Test Section, Testing, Retests
For HMA mixture accepted by Nonstatistical Evaluation, comply with the requirements in Table 13:

Table 13

Nonstatistical Evaluation Lots, Sublots, Sampling, Test Section, Testing, Retests		
Comply with the Specifications Below		Comply with the Requirements of the Section for:
Test Section	Section 5-04.3(9)A	Nonstatistical Evaluation
Lots and Sublots	Section 5-04.3(9)B1	Statistical Evaluation
Sampling	Section 5-04.3(9)B2	Statistical Evaluation

INFORMATIONAL COPY ONLY - NOT FOR BIDDING

Acceptance Tests	Section 5-04.3(9)B3	Statistical Evaluation
Retests	Section 5-04.3(9)B7	Statistical Evaluation

5-04.3(9)C2 Mixture Nonstatistical Evaluation - Acceptance
Each mixture lot of HMA produced under Nonstatistical Evaluation, for which all sublot acceptance test results (required by Table 13) fall within the Job Mix Formula Tolerances for Nonstatistical Evaluation in Section 9-03.8(7), will be accepted at the unit Contract price with no further evaluation.

5-04.3(9)C3 Mixture Nonstatistical Evaluation – Out of Tolerance Procedures
Each mixture lot of HMA produced under Nonstatistical Evaluation, for which any sublot acceptance test result (required by Table 13) falls outside of the Job Mix Formula Tolerances for Nonstatistical Evaluation in Section 9-03.8(7), shall be evaluated in accordance with Section 1-06.2 and Table 14 to determine a Job Mix Compliance Price Adjustment.

Table 14

Nonstatistical Evaluation – Out of Tolerance Procedures	
Comply with the Following[1]	
Pay Factors[2]	Section 5-04.3(9)B4
Composite Pay Factors[3]	Section 5-04.3(9)B5
Price Adjustments	Section 5-04.3(9)B6

[1]When less than three mixture sublots exist, backup samples of the existing mixture sublots shall be tested to provide a minimum of three sets of results for evaluation. If enough backup samples are not available, the Contracting Agency will select core sample locations from the Roadway in accordance with WSDOT Test Method T 716, take cores from the roadway in accordance with WSDOT SOP 734, and test the cores in accordance with WSDOT SOP 737.
[2]The Nonstatistical Evaluation tolerance limits in Section 9-03.8(7) will be used in the calculation of the PF_i.
[3]The maximum CPF shall be 1.00.

5-04.3(9)D Mixture Acceptance – Visual Evaluation
Visual Evaluation of HMA mixture will be by visual inspection by the Engineer or, in the sole discretion of the Engineer, the Engineer may sample and test the mixture.

5-04.3(9)D1 Mixture Visual Evaluation – Lots, Sampling, Testing, Price Adjustments
HMA mixture accepted by Visual Evaluation will not be broken into lots unless the Engineer determines that testing is required. When that occurs, the Engineer will identify the limits of the questionable HMA mixture, and that questionable HMA mixture shall constitute a lot. Then, the Contractor will take samples from the truck, or the

INFORMATIONAL COPY ONLY - NOT FOR BIDDING

Engineer will take core samples from the roadway at a minimum of three random locations from within the lot, selected in accordance with WSDOT Test Method T 716, taken from the roadway in accordance with WSDOT SOP 734, and tested in accordance with WSDOT SOP 737. The Engineer will test one of the samples for all constituents in Section 5-04.3(9)B3. If all constituents from that test fall within the Job Mix Formula Tolerances (for Visual Evaluation) in Section 9-03.8(7), the lot will be accepted at the unit Contract price with no further evaluation.

When one or more constituents fall outside those tolerance limits, the other samples will be tested for all constituents in Section 5-04.3(9)B3, and a Job Mix Compliance Price Adjustment will be calculated in accordance with Table 15.

Table 15

Visual Evaluation – Out of Tolerance Procedures	
Comply with the Following	
Pay Factors[1]	Section 5-04.3(9)B4
Composite Pay Factors[2]	Section 5-04.3(9)B5
Price Adjustments	Section 5-04.3(9)B6

[1]The Visual Evaluation tolerance limits in Section 9-03.8(7) will be used in the calculation of the PF_i.
[2]The maximum CPF shall be 1.00.

5-04.3(9)E Mixture Acceptance – Notification of Acceptance Test Results

The results of all mixture acceptance testing and the Composite Pay Factor (CPF) of the lot after three sublots have been tested will be available to the Contractor through The Contracting Agency's website.

The Contracting Agency will endeavor to provide written notification (via email to the Contractor's designee) of acceptance test results through its web-based materials testing system Statistical Analysis of Materials (SAM) within 24 hours of the sample being made available to the Contracting Agency. However, the Contractor agrees:

1. Quality control, defined as the system used by the Contractor to monitor, assess, and adjust its production processes to ensure that the final HMA mixture will meet the specified level of quality, is the sole responsibility of the Contractor.

2. The Contractor has no right to rely on any testing performed by the Contracting Agency, nor does the Contractor have any right to rely on timely notification by the Contracting Agency of the Contracting Agency's test results (or statistical analysis thereof), for any part of quality control and/or for making changes or correction to any aspect of the HMA mixture.

3. The Contractor shall make no claim for untimely notification by the Contracting Agency of the Contracting Agency's test results or statistical analysis.

INFORMATIONAL COPY ONLY - NOT FOR BIDDING

5-04.3(10) HMA Compaction Acceptance

For all HMA, the Contractor shall comply with the General Compaction Requirements in Section 5-04.3(10)A. The Contracting Agency will evaluate all HMA for compaction compliance with one of the following - Statistical Evaluation, Visual Evaluation, or Test Point Evaluation - determined by the criteria in Table 16:

Table 16

Criteria for Determining Method of Evaluation for HMA Compaction[1]		
Statistical Evaluation of HMA Compaction is Required For:	**Visual Evaluation of HMA Compaction is Required For:**	**Test Point Evaluation of HMA Compaction is Required For:**
• Any HMA for which the specified course thickness is greater than 0.10 feet, and the HMA is in: ○ traffic lanes, including but not limited to: • ramp lanes • truck climbing lanes • weaving lanes • speed change lanes	• "HMA for Preleveling…" • "HMA for Pavement Repair…"	• Any HMA not meeting the criteria for Statistical Evaluation or Visual Evaluation

[1]This table applies to all HMA, and shall be the sole basis for determining the acceptance method for compaction.

The Contracting Agency may, at its sole discretion, evaluate any HMA for compliance with the Cyclic Density requirements of Section 5-04.3(10)B.

5-04.3(10)A HMA Compaction – General Compaction Requirements

Immediately after the HMA has been spread and struck off, and after surface irregularities have been adjusted, thoroughly and uniformly compact the mix. The completed course shall be free from ridges, ruts, humps, depressions, objectionable marks, and irregularities and shall conform to the line, grade, and cross-section shown in the Plans. If necessary, alter the JMF in accordance with Section 9-03.8(7) to achieve desired results.

Compact the mix when it is in the proper condition so that no undue displacement, cracking, or shoving occurs. Compact areas inaccessible to large compaction equipment by mechanical or hand tampers. Remove HMA that becomes loose, broken, contaminated, shows an excess or deficiency of asphalt, or is in any way defective. Replace the removed material with new HMA, and compact it immediately to conform to the surrounding area.

INFORMATIONAL COPY ONLY - NOT FOR BIDDING

The type of rollers to be used and their relative position in the compaction sequence shall generally be the Contractor's option, provided the specified densities are attained. An exception shall be that pneumatic tired rollers shall be used for compaction of the wearing course beginning October 1st of any year through March 31st of the following year. Coverage with a steel wheel roller may precede pneumatic tired rolling. Unless otherwise approved by the Engineer, operate rollers in the static mode when the internal temperature of the mix is less than 175°F. Regardless of mix temperature, do not operate a roller in a mode that results in checking or cracking of the mat.

On bridge decks and on the five feet of roadway approach immediately adjacent to the end of bridge/back of pavement seat, operate rollers in static mode only.

5-04.3(10)B HMA Compaction – Cyclic Density
Low cyclic density areas are defined as spots or streaks in the pavement that are less than 90 percent of the theoretical maximum density. At the Engineer's discretion, the Engineer may evaluate the HMA pavement for low cyclic density, and when doing so will follow WSDOT SOP 733. A $500 Cyclic Density Price Adjustment will be assessed for any 500-foot section with two or more density readings below 90 percent of the theoretical maximum density.

5-04.3(10)C HMA Compaction Acceptance – Statistical Evaluation
HMA compaction which is accepted by Statistical Evaluation will be based on acceptance testing performed by the Contracting Agency, and statistical analysis of those acceptance tests results. This will result in a Compaction Price Adjustment.

5-04.3(10)C1 HMA Compaction Statistical Evaluation – Lots and Sublots
HMA compaction which is accepted by Statistical Evaluation will be evaluated by the Contracting Agency dividing the project into compaction lots, and each compaction lot will be evaluated using stratified random sampling by the Contracting Agency sub-dividing each compaction lot into compaction sublots. All mixture in any individual compaction lot shall be of the same mix design. The compaction sublots will be numbered in the order in which the mixture (of a particular mix design) is paved.

Each compaction lot comprises a maximum of 15 compaction sublots, except for the final compaction lot of each mix design on the Contract, which comprises a maximum of 25 sublots.

Each compaction sublot shall be uniform in size as shown in Table 17, except that the last compaction sublot of each day may be increased to a maximum of two times the compaction sublot quantity calculated. Minor variations in the size of any sublot shall not be cause to invalidate the associated test result.

INFORMATIONAL COPY ONLY - NOT FOR BIDDING

Table 17

HMA Compaction Sublot Size	
HMA Original Plan Quantity (tons)[1]	Compaction Sublot Size (tons)
<20,000	100
20,000 to 30,000	150
>30,000	200

[1] In determining the plan quantity tonnage, do not include any tons accepted by test point evaluation.

The following will cause one compaction lot to end prematurely and a new compaction lot to begin:

- For a compaction lot in progress with a compaction CPF less than 0.75, a new compaction lot will begin at the Contractor's request after the Engineer is satisfied that material conforming to the Specifications can be produced. See also Section 5-04.3(11)F.

5-04.3(10)C2 HMA Compaction Statistical Evaluation – Acceptance Testing

Comply with Section 1-06.2(1).

The location of HMA compaction acceptance tests will be randomly selected by the Contracting Agency from within each sublot, with one test per sublot. The Contracting Agency will determine the random sample location using WSDOT Test Method T 716.

Use Table 18 to determine compaction acceptance test procedures and to allocate compaction acceptance sampling and testing responsibilities between the Contractor and the Contracting Agency. Roadway cores shall be taken or nuclear density testing shall occur after completion of the finish rolling, prior to opening to traffic, and on the same day that the mix is placed.

Table 18

HMA Compaction Acceptance Testing Procedures and Responsibilities			
	When Contract Includes Bid Item "Roadway Cores"	When Contract Does Not Include Bid Item "Roadway Cores"	
Basis for Test:	Roadway Cores	Roadway Cores[3]	Nuclear Density Gauge[3]
In-Place Density Determined by:	Contractor shall take cores[1] using WSDOT SOP 734[2] Contracting Agency will	Contracting Agency will take cores[1] using WSDOT SOP 734	Contracting Agency, using FOP for WAQTC TM 8

INFORMATIONAL COPY ONLY NOT FOR BIDDING

	determine core density using FOP for AASHTO T 166	Contracting Agency will determine core density using FOP for AASHTO T 166	
Theoretical Maximum Density Determined by:	Contracting Agency, using FOP for AASHTO T 209		
Rolling Average of Theoretical Maximum Densities Determined by:	Contracting Agency, using WSDOT SOP 729		
Percent Compaction in Each Sublot Determined by:	Contracting Agency, using WSDOT SOP 736	Contracting Agency, using WSDOT SOP 736	Contracting Agency, using FOP for WAQTC TM 8

[1]The core diameter shall be 4-inches unless otherwise approved by the Engineer.

[2]The Contractor shall take the core samples in the presence of the Engineer, at locations designated by the Engineer, and deliver the core samples to the Contracting Agency.

[3]The Contracting Agency will determine, in its sole discretion, whether it will take cores or use the nuclear density gauge to determine in-place density. Exclusive reliance on cores for density acceptance is generally intended for small paving projects and is not intended as a replacement for nuclear gauge density testing on typical projects.

When using the nuclear density gauge for acceptance testing of pavement density, the Engineer will follow WSDOT SOP 730 for correlating the nuclear gauge with HMA cores. When cores are required for the correlation, coring and testing will be by the Contracting Agency. When a core is taken for gauge correlation at the location of a sublot, the relative density of the core will be used for the sublot test result and is exempt from retesting.

5-04.3(10)C3 HMA Statistical Compaction – Price Adjustments

For each HMA compaction lot (that is accepted by Statistical Evaluation) which has less than three compaction sublots, for which all compaction sublots attain a minimum of 91 percent compaction determined in accordance with FOP for WAQTC TM 8 (or WSDOT SOP 736 when provided by the Contract), the HMA will be accepted at the unit Contract price with no further evaluation.

For each HMA compaction lot (that is accepted by Statistical Evaluation) which does not meet the criteria in the preceding paragraph, the compaction lot shall be evaluated in accordance with Section 1-06.2(2) to determine the appropriate Compaction Price Adjustment (CPA). All of the test results obtained from the

INFORMATIONAL COPY ONLY - NOT FOR BIDDING

acceptance samples from a given compaction lot shall be evaluated collectively. Additional testing by either a nuclear density gauge or cores will be completed as required to provide a minimum of three tests for evaluation.

For the statistical analysis in Section 1-06.2, use the following values:

x =	Percent compaction of each sublot
USL =	100
LSL=	91

Each CPA will be determined as follows:

CPA = [0.40 x (CPF – 1.00)] x Q x UP

Where

CPA =	Compaction Price Adjustment for the compaction lot ($)
CPF =	Composite Pay Factor for the compaction lot (maximum is 1.05)
Q =	Quantity in the compaction lot (tons)
UP =	Unit price of the HMA in the compaction lot ($/ton)

5-04.3(10)C4 HMA Statistical Compaction – Requests for Retesting

For a compaction sublot that has been tested with a nuclear density gauge that did not meet the minimum of 91 percent of the theoretical maximum density in a compaction lot with a CPF below 1.00 and thus subject to a price reduction or rejection, the Contractor may request that a core, taken at the same location as the nuclear density test, be used for determination of the relative density of the compaction sublot. The relative density of the core will replace the relative density determined by the nuclear density gauge for the compaction sublot and will be used for calculation of the CPF and acceptance of HMA compaction lot. When cores are taken by the Contracting Agency at the request of the Contractor, they shall be requested by noon of the next workday after the test results for the compaction sublot have been provided or made available to the Contractor. Traffic control shall be provided by the Contractor as requested by the Engineer. Failure by the Contractor to provide the requested traffic control will result in forfeiture of the request for retesting. When the CPF for the compaction lot based on the results of the cores is less than 1.00, the Contracting Agency will deduct the cost for the coring from any monies due or that may become due the Contractor under the Contract at the rate of $200 per core and the Contractor shall pay for the cost of the traffic control.

5-04.3(10)D HMA Compaction – Visual Evaluation

Visual Evaluation will be the basis of acceptance for compaction of the Bid items “HMA for Pavement Repair Cl. ___ PG ___”and “HMA for Prelevelling Class___ PG___”. This HMA shall be thoroughly compacted

INFORMATIONAL COPY ONLY - NOT FOR BIDDING

to the satisfaction of the Engineer. HMA that is used to prelevel wheel ruts shall be compacted with a pneumatic tire roller.

5-04.3(10)E HMA Compaction – Test Point Evaluation
When compaction acceptance is by Test Point Evaluation, compact HMA based on a test point evaluation of the compaction train. Perform the test point evaluation in accordance with instructions from the Engineer. The number of passes with an approved compaction train, required to attain the maximum test point density, shall be used on all subsequent paving.

5-04.3(10)F HMA Compaction Acceptance – Notification of Acceptance Test Results
The obligations and responsibilities for notifying the Contractor of compaction acceptance test results are the same as for mixture acceptance test results. See Section 5-04.3(9)E.

5-04.3(11) Reject Work
This Section applies to HMA and all requirements related to HMA (except aggregates prior to being incorporated into HMA). For rejection of aggregate prior to its incorporation into HMA refer to Section 3-04.

5-04.3(11)A Reject Work – General
Work that is defective or does not conform to Contract requirements shall be rejected.

5-04.3(11)B Rejection by Contractor
The Contractor may, prior to acceptance sampling and testing, elect to remove any defective material and replace it with new material. Any such new material will be sampled, tested, and evaluated for acceptance.

5-04.3(11)C Rejection Without Testing (Mixture or Compaction)
The Engineer may, without sampling, reject any batch, load, or section of Roadway that appears defective. Material rejected before placement shall not be incorporated into the pavement.

No payment will be made for the rejected materials or the removal of the materials unless the Contractor requests the rejected material to be tested. If the Contractor requests testing, acceptance will be by Statistical Evaluation, and a minimum of three samples will be obtained and tested. When uncompacted material is required for testing but not available, the Engineer will determine random sample locations on the roadway in accordance with WSDOT Test Method T 716, take cores in accordance with WSDOT SOP 734, and test the cores in accordance with WSDOT SOP 737.

If the CPF for the rejected material is less than 0.75, no payment will be made for the rejected material; in addition, the cost of sampling and testing shall be borne by the Contractor. If the CPF is greater than or equal to 0.75, the cost of sampling and testing will be borne by the Contracting Agency. If the material is rejected before placement and the CPF is greater than or equal to 0.75, compensation for the rejected material will be at a CPF of 0.75. If rejection occurs after placement and

INFORMATIONAL COPY ONLY - NOT FOR BIDDING

the CPF is greater than or equal to 0.75, compensation for the rejected material will be at the calculated CPF with an addition of 25 percent of the unit Contract price added for the cost of removal and disposal.

5-04.3(11)D Rejection – A Partial Sublot (Mixture or Compaction)
In addition to the random acceptance sampling and testing, the Engineer may also isolate from a mixture or compaction sublot any material that is suspected of being defective in relative density, gradation or asphalt binder content. Such isolated material will not include an original sample location. The Contracting Agency will obtain a minimum of three random samples of the suspect material and perform the testing. When uncompacted material is required for testing but is not available, the Engineer will select random sample locations on the roadway in accordance with WSDOT Test Method T 716, take cores samples in accordance with WSDOT SOP 734, and test the material in accordance with WSDOT SOP 737. The material will then be statistically evaluated as an independent lot in accordance with Section 1-06.2(2).

5-04.3(11)E Rejection – An Entire Sublot (Mixture or Compaction)
An entire mixture or compaction sublot that is suspected of being defective may be rejected. When this occurs, a minimum of two additional random samples from this sublot will be obtained. When uncompacted material is required for the additional samples but the material has been compacted, the Contracting Agency will take and test cores from the roadway as described in Section 5-04.3(11)D. The additional samples and the original sublot will be evaluated as an independent lot in accordance with Section 1-06.2(2).

5-04.3(11)F Rejection - A Lot in Progress (Mixture or Compaction)
The Contractor shall shut down operations and shall not resume HMA placement until such time as the Engineer is satisfied that material conforming to the Specifications can be produced when:

1. the Composite Pay Factor (CPF) of a mixture or compaction lot in progress drops below 1.00 and the Contractor is taking no corrective action, or

2. the Pay Factor (PF_i) for any constituent of a mixture or compaction lot in progress drops below 0.95 and the Contractor is taking no corrective action, or

3. either the PF_i for any constituent (or the CPF) of a mixture or compaction lot in progress is less than 0.75.

5-04.3(11)G Rejection – An Entire Lot (Mixture or Compaction)
An entire lot with a CPF of less than 0.75 will be rejected.

5-04.3(12) Joints

5-04.3(12)A Transverse Joints
Conduct operations such that placement of the top or wearing course is a continuous operation or as close to continuous as possible. Unscheduled transverse joints will be allowed, but the roller may pass over the

INFORMATIONAL COPY ONLY - NOT FOR BIDDING

unprotected end of the freshly laid HMA only when the placement of the course is discontinued for such a length of time that the HMA will cool below compaction temperature. When the Work is resumed, cut back the previously compacted HMA to produce a slightly beveled edge for the full thickness of the course.

Construct a temporary wedge of HMA on a 50H:1V where a transverse joint as a result of paving or planing is open to traffic. Separate the HMA in the temporary wedge from the permanent HMA upon which it is placed by strips of heavy wrapping paper or other methods approved by the Engineer. Remove the wrapping paper and trim the joint to a slightly beveled edge for the full thickness of the course prior to resumption of paving.

Waste the material that is cut away and place new HMA against the cut. Use rollers or tamping irons to seal the joint.

5-04.3(12)B Longitudinal Joints

Offset the longitudinal joint in any one course from the course immediately below by not more than 6 inches nor less than 2 inches. Locate all longitudinal joints constructed in the wearing course at a lane line or an edge line of the Traveled Way. Construct a notched wedge joint along all longitudinal joints in the wearing surface of new HMA unless otherwise approved by the Engineer. The notched wedge joint shall have a vertical edge of not less than the maximum aggregate size nor more than ½ of the compacted lift thickness, and then taper down on a slope not steeper than 4H:1V. Uniformly compact the sloped portion of the HMA notched wedge joint.

On one-lane ramps a longitudinal joint may be constructed at the center of the traffic lane, subject to approval by the Engineer, if:

1. The ramp must remain open to traffic, or

2. The ramp is closed to traffic and a hot-lap joint is constructed.

    a. Two paving machines shall be used to construct the hot-lap joint.

    b. The pavement within 6 inches of the hot-lap joint will not be excluded from random location selection for compaction testing.

    c. Construction equipment other than rollers shall not operate on any uncompacted HMA.

When HMA is placed adjacent to cement concrete pavement, construct longitudinal joints between the HMA and the cement concrete pavement. Saw the joint to the dimensions shown on Standard Plan A-40.10 and fill with joint sealant meeting the requirements of Section 9-04.2.

INFORMATIONAL COPY ONLY - NOT FOR BIDDING

5-04.3(13) Surface Smoothness

The completed surface of all courses shall be of uniform texture, smooth, uniform as to crown and grade, and free from defects of all kinds. The completed surface of the wearing course shall not vary more than ⅛ inch from the lower edge of a 10-foot straightedge placed on the surface parallel to the centerline. The transverse slope of the completed surface of the wearing course shall vary not more than ¼ inch in 10 feet from the rate of transverse slope shown in the Plans.

When deviations in excess of the above tolerances are found that result from a high place in the HMA, correct the pavement surface by one of the following methods:

1. Remove material from high places by grinding with an approved grinding machine, or

2. Remove and replace the wearing course of HMA, or

3. By other method approved by the Engineer.

Correct defects until there are no deviations anywhere greater than the allowable tolerances.

Deviations in excess of the above tolerances that result from a low place in the HMA and deviations resulting from a high place where corrective action, in the opinion of the Engineer, will not produce satisfactory results will be accepted with a price adjustment. The Engineer shall deduct from monies due or that may become due to the Contractor the sum of $500.00 for each and every section of single traffic lane 100 feet in length in which any excessive deviations described above are found.

When portland cement concrete pavement is to be placed on HMA, the surface tolerance of the HMA shall be such that no surface elevation lies above the Plan grade minus the specified Plan depth of portland cement concrete pavement. Prior to placing the portland cement concrete pavement, bring any such irregularities to the required tolerance by grinding or other means approved by the Engineer.

When utility appurtenances such as manhole covers and valve boxes are located in the Traveled Way, pave the Roadway before the utility appurtenances are adjusted to the finished grade.

5-04.3(14) Planing Bituminous Pavement

Plane in such a manner that the underlying pavement is not torn, broken, or otherwise damaged by the planing operation. Delamination or raveling of the underlying pavement will not be construed as damage due to the Contractor's operations. Pavement outside the limits shown in the Plans or designated by the Engineer that is damaged by the Contractor's operations shall be repaired to the satisfaction of the Engineer at no additional cost to the Contracting Agency.

INFORMATIONAL COPY ONLY - NOT FOR BIDDING

For mainline planing operations, use equipment with automatic controls and with sensors for either or both sides of the equipment. The controls shall be capable of sensing the grade from an outside reference line, or a mat-referencing device. The automatic controls shall have a transverse slope controller capable of maintaining the mandrel at the desired transverse slope (expressed as a percentage) within plus or minus 0.1 percent.

Remove all loose debris from the planed surface before opening the planed surface to traffic. The planings and other debris resulting from the planing operation shall become the property of the Contractor and be disposed of in accordance with Section 2-03.3(7)C, or as otherwise allowed by the Contract.

5-04.3(15) Sealing Pavement Surfaces
Apply a fog seal where shown in the Plans. Construct the fog seal in accordance with Section 5-02.3. Unless otherwise approved by the Engineer, apply the fog seal prior to opening to traffic.

5-04.3(16) HMA Road Approaches
Construct HMA approaches at the locations shown in the Plans or where staked by the Engineer, in accordance with Section 5-04.

5-04.4 Measurement
HMA Cl. ___ PG ___, HMA for ___ Cl. ___ PG ___, and Commercial HMA will be measured by the ton in accordance with Section 1-09.2, with no deduction being made for the weight of asphalt binder, mineral filler, or any other component of the HMA. If the Contractor elects to remove and replace HMA as allowed by Section 5-04.3(11), the material removed will not be measured.

Roadway cores will be measured per each for the number of cores taken.

Crack Sealing-LF will be measured by the linear foot along the line of the crack.

Soil residual herbicide will be measured by the mile for the stated width to the nearest 0.01 mile or by the square yard, whichever is designated in the Proposal.

Pavement repair excavation will be measured by the square yard of surface marked prior to excavation.

Asphalt for fog seal will be measured by the ton, as provided in Section 5-02.4.

Longitudinal joint seals between the HMA and cement concrete pavement will be measured by the linear foot along the line and slope of the completed joint seal.

Planing bituminous pavement will be measured by the square yard.

Temporary pavement marking will be measured by the linear foot as provided in Section 8-23.4.

Water will be measured by the M gallon as provided in Section 2-07.4.

INFORMATIONAL COPY ONLY - NOT FOR BIDDING

5-04.5 Payment

Payment will be made for each of the following Bid items that are included in the Proposal:

"HMA Cl. ___ PG ___", per ton.
"HMA for Approach Cl. ___ PG ___", per ton.
"HMA for Preleveling Cl. ___ PG ___", per ton.
"HMA for Pavement Repair Cl. ___ PG ___", per ton.
"Commercial HMA", per ton.
The unit Contract price per ton for "HMA Cl. ___ PG ___", "HMA for Approach Cl. ___ PG ___", "HMA for Preleveling Cl. ___ PG ___", "HMA for Pavement Repair Cl. ___ PG ___", and "Commercial HMA" shall be full compensation for all costs, including anti-stripping additive, incurred to carry out the requirements of Section 5-04 except for those costs included in other items which are included in this Subsection and which are included in the Proposal.

"Crack Sealing-FA", by force account.
"Crack Sealing-FA" will be paid for by force account as specified in Section 1-09.6. For the purpose of providing a common Proposal for all Bidders, the Contracting Agency has entered an amount in the Proposal to become a part of the total Bid by the Contractor.

"Crack Sealing-LF", per linear foot.
The unit Contract price per linear foot for "Crack Sealing-LF" shall be full payment for all costs incurred to perform the Work described in Section 5-04.3(4)A.

"Soil Residual Herbicide ____ ft. Wide", per mile, or
"Soil Residual Herbicide", per square yard.
The unit Contract price per mile or per square yard for "Soil Residual Herbicide" shall be full payment for all costs incurred to obtain, provide and install herbicide in accordance with Section 5-04.3(4)B.

"Pavement Repair Excavation Incl. Haul", per square yard.
The unit Contract price per square yard for "Pavement Repair Excavation Incl. Haul" shall be full payment for all costs incurred to perform the Work described in Section 5-04.3(4)C with the exception, however, that all costs involved in the placement of HMA shall be included in the unit Contract price per ton for "HMA for Pavement Repair Cl. ___ PG ___", per ton.

"Asphalt for Fog Seal", per ton.
Payment for "Asphalt for Fog Seal" is described in Section 5-02.5.

"Longitudinal Joint Seal", per linear foot.
The unit Contract price per linear foot for "Longitudinal Joint Seal" shall be full payment for all costs incurred to construct the longitudinal joint between HMA and cement concrete pavement, as described in Section 5-04.3(12)B.

"Planing Bituminous Pavement", per square yard.
The unit Contract price per square yard for "Planing Bituminous Pavement" shall be full payment for all costs incurred to perform the Work described in Section 5-04.3(14).

INFORMATIONAL COPY ONLY - NOT FOR BIDDING

"Temporary Pavement Marking", per linear foot.
Payment for "Temporary Pavement Marking" is described in Section 8-23.5.

"Water", per M gallon.
Payment for "Water" is described in Section 2-07.5.

"Job Mix Compliance Price Adjustment", by calculation.
"Job Mix Compliance Price Adjustment" will be calculated and paid for as described in Section 5-04.3(9)B6, 5-04.3(9)C3, and 5-04.3(9)D1.

"Compaction Price Adjustment", by calculation.
"Compaction Price Adjustment" will be calculated and paid for as described in Section 5-04.3(10)C3.

"Roadway Core", per each.
The Contractor's costs for all other Work associated with the coring (e.g., traffic control) shall be incidental and included within the unit Bid price per each and no additional payments will be made.

"Cyclic Density Price Adjustment", by calculation.
"Cyclic Density Price Adjustment" will be calculated and paid for as described in Section 5-04.3(10)B.

6-02.AP6

Section 6-02, Concrete Structures
April 4, 2016

6-02.3(2)A Contractor Mix Design
The following new sentence is inserted after the first sentence of the third paragraph:

The mix design submittal shall also include test results no older than one year showing that the Aggregates do not contain Deleterious Substances in accordance with Section 9-03.

6-02.3(2)A1 Contractor Mix Design for Concrete Class 4000D
The following new sentence is inserted after the second sentence of the last paragraph:

Mix designs using shrinkage reducing admixture shall state the specific quantity required.

The following new sentence is inserted before the last sentence of the last paragraph:

Testing samples of mixes using shrinkage reducing admixture shall use the admixture amount specified in the mix design submittal.

6-02.3(2)B Commercial Concrete
The last sentence of the first paragraph is revised to read:

Commercial concrete does not require mix design or source approvals for cement, aggregate, and other admixtures.

INFORMATIONAL COPY ONLY - NOT FOR BIDDING

6-02.3(26)D2 Test Block Dimensions

The first sentence is revised to read:

> The dimensions of the test block perpendicular to the tendon in each direction shall be the smaller of twice the minimum edge distance or the minimum spacing specified by the special anchorage device manufacturer, with the stipulation that the concrete cover over any confining reinforcing steel or supplementary skin reinforcement shall be appropriate for the project-specific application and circumstances.

6-02.3(27)A Use of Self-Consolidating Concrete for Precast Units

Item number 2 of the first paragraph is revised to read:

> 2. Precast reinforced concrete three-sided structures, box culverts and split box culverts in accordance with Section 7-02.3(6).

6-09.AP6

Section 6-09, Modified Concrete Overlays
April 4, 2016

6-09.3(8)A Quality Assurance for Microsilica Modified and Fly Ash Modified Concrete Overlays

The first sentence of the first paragraph is revised to read the following two new sentences:

> The Engineer will perform slump, temperature, and entrained air tests for acceptance in accordance with Section 6-02.3(5)D and as specified in this Section after the Contractor has turned over the concrete for acceptance testing. Concrete samples for testing shall be supplied to the Engineer in accordance with Section 6-02.3(5)E.

The last paragraph is deleted.

6-09.3(8)B Quality Assurance for Latex Modified Concrete Overlays

The first two paragraphs are deleted and replaced with the following:

> The Engineer will perform slump, temperature, and entrained air tests for acceptance in accordance with Section 6-02.3(5)D and as specified in this Section after the Contractor has turned over the concrete for acceptance testing. The Engineer will perform testing as the concrete is being placed. Samples shall be taken on the first charge through each mobile mixer and every other charge thereafter. The sample shall be taken after the first 2 minutes of continuous mixer operation. Concrete samples for testing shall be supplied to the Engineer in accordance with Section 6-02.3(5)E.

The second to last sentence of the last paragraph is revised to read:

> Recommendations made by the technical representative on or off the jobsite shall be adhered to by the Contractor.

INFORMATIONAL COPY ONLY - NOT FOR BIDDING

6-14.AP6

Section 6-14, Geosynthetic Retaining Walls
January 4, 2016

6-14.5 Payment
The bid item "Concrete Fascia Panel", per square foot, and the paragraph following this bid item are revised to read:

> "Concrete Fascia Panel For Geosynthetic Wall", per square foot.
>
> All costs in connection with constructing the concrete fascia panels as specified shall be included in the unit Contract price per square foot for "Concrete Fascia Panel For Geosynthetic Wall", including all steel reinforcing bars, premolded joint filler, polyethylene bond breaker strip, joint sealant, PVC pipe for weep holes, exterior surface finish, and pigmented sealer (when specified), constructing and placing the concrete footing, edge beam, anchor beam, anchor rod assembly, and backfill.

6-19.AP6

Section 6-19, Shafts
January 4, 2016

6-19.4 Measurement
The first paragraph is revised to read:

> Soil excavation for shaft, including haul, will be measured by the cubic yards of shaft excavated. The cubic yards will be computed using the shaft diameter, top of shaft elevation and bottom of shaft elevation shown in the Plans, less all rock excavation measured as specified for rock excavation. Excavation between the existing ground line and the top of shaft elevation is considered incidental to soil excavation for shaft and will not be measured.

The second paragraph is deleted.

6-19.5 Payment
The paragraph following the bid item "Soil Excavation For Shaft Including Haul", per cubic yard is revised to read:

> The unit Contract price per cubic yard for "Soil Excavation For Shaft Including Haul" shall be full pay for performing the work as specified, including all costs in connection with furnishing, mixing, placing, maintaining, containing, collecting, and disposing of all mineral, synthetic, and water slurry, and disposing of groundwater collected by the shaft excavation, and the incidental excavation of soils between the top of shaft elevation shown in the Plans and the existing ground line.

INFORMATIONAL COPY ONLY - NOT FOR BIDDING

8-01.AP8

Section 8-01, Erosion Control and Water Pollution Control
April 4, 2016

8-01.2 Materials
This section is supplemented with the following new paragraph:

Recycled concrete, in any form, shall not be used for any Work defined in Section 8-01.

8-01.3(8) Street Cleaning
This section is revised to read:

Self-propelled street sweepers shall be used to remove and collect sediment and other debris from the Roadway, whenever required by the Engineer. The street sweeper shall effectively collect these materials and prevent them from being washed or blown off the Roadway or into waters of the State. Street sweepers shall not generate fugitive dust and shall be designed and operated in compliance with applicable air quality standards.

Material collected by the street sweeper shall be disposed of in accordance with Section 2-03.3(7)C.

Street washing with water will require the concurrence of the Engineer.

8-10.AP8

Section 8-10, Guide Posts
January 4, 2016

8-10.3 Construction Requirements
The last sentence of the second paragraph is deleted.

8-20.AP8

Section 8-20, Illumination, Traffic Signal Systems, Intelligent Transportation Systems, and Electrical
April 4, 2016

8-20.3(5)A General
The last paragraph is revised to read:

Immediately after the sizing mandrel has been pulled through, install an equipment grounding conductor if applicable (see Section 8-20.3(9)) and any new or existing wire or cable as specified in the Plans. Where conduit is installed for future use, install a 200-pound minimum tensile strength pull string with the equipment grounding conductor. The pull string shall be attached to duct plugs or caps at both ends of the conduit.

8-20.3(5)A1 Fiber Optic Conduit
The last paragraph is deleted.

INFORMATIONAL COPY ONLY - NOT FOR BIDDING

8-20.3(5)D Conduit Placement

Item number 2 is revised to read:

2. 24-inches below the top of the untreated surfacing on a Roadbed.

8-20.3(9) Bonding, Grounding

The following two new paragraphs are inserted after the first paragraph:

Install an equipment grounding conductor in all new conduit, whether or not the equipment grounding conductor is called for in the wire schedule.

For each new conduit with innerduct install an equipment grounding conductor in only one of the innerducts unless otherwise required by the NEC or the Plans.

The fourth paragraph (after the preceding Amendments are applied) is revised to read:

Bonding jumpers and equipment grounding conductors meeting the requirements of Section 9-29.3(2)A3 shall be minimum #8 AWG, installed in accordance with the NEC. Where existing conduits are used for the installation of new circuits, an equipment grounding conductor shall be installed unless an existing equipment ground conductor, which is appropriate for the largest circuit, is already present in the existing raceway. The equipment ground conductor between the isolation switch and the sign lighter fixtures shall be minimum #14 AWG stranded copper conductor. Where parallel circuits are enclosed in a common conduit, the equipment-grounding conductor shall be sized by the largest overcurrent device serving any circuit contained within the conduit.

The second sentence of the fifth paragraph (after the preceding Amendments are applied) is revised to read:

A non-insulated stranded copper conductor, minimum #8 AWG with a full circle crimp on connector (crimped with a manufacturer recommended crimper) shall be connected to the junction box frame or frame bonding stud, the other end shall be crimped to the equipment bonding conductor, using a “C” type crimp connector.

The last two sentences of the sixth paragraph (after the preceding Amendments are applied) are revised to read:

For light standards, signal standards, cantilever and sign bridge Structures the supplemental grounding conductor shall be #4 AWG non-insulated stranded copper conductor. For steel sign posts which support signs with sign lighting or flashing beacons the supplemental grounding conductor shall be #6 AWG non insulated stranded copper conductor.

The fourth to last paragraph is revised to read:

Install a two grounding electrode system at each service entrance point, at each electrical service installation and at each separately derived power source. The service entrance grounding electrode system shall conform to the “Service Ground” detail in the Standard Plans. If soil conditions make vertical grounding electrode installation impossible an alternate installation procedure as described in the NEC may be used. Maintain a minimum of 6 feet of separation between any two grounding electrodes within the grounding system. Grounding electrodes shall be bonded copper, ferrous

INFORMATIONAL COPY ONLY - NOT FOR BIDDING

core materials and shall be solid rods not less than 10 feet in length if they are ½ inch in diameter or not less than 8 feet in length if they are ⅝ inch or larger in diameter.

8-22.AP8

Section 8-22, Pavement Marking
January 4, 2016

8-22.4 Measurement
The first two sentences of the fourth paragraph are revised to read:

> The measurement for "Painted Wide Lane Line", "Plastic Wide Lane Line", "Profiled Plastic Wide Lane Line", "Painted Barrier Center Line", "Plastic Barrier Center Line", "Painted Stop Line", "Plastic Stop Line", "Painted Wide Dotted Entry Line", or "Plastic Wide Dotted Entry Line" will be based on the total length of each painted, plastic or profiled plastic line installed. No deduction will be made for the unmarked area when the marking includes a broken line such as, wide broken lane line, drop lane line, wide dotted lane line or wide dotted entry line.

8-22.5 Payment
The following two new Bid items are inserted after the Bid item "Plastic Crosshatch Marking", per linear foot:

> "Painted Wide Dotted Entry Line", per linear foot.
>
> "Plastic Wide Dotted Entry Line", per linear foot.

9-03.AP9

Section 9-03, Aggregates
April 4, 2016

9-03.1(1) General Requirements
This first paragraph is supplemented with the following:

> Reclaimed aggregate may be used if it complies with the specifications for Portland Cement Concrete. Reclaimed aggregate is aggregate that has been recovered from plastic concrete by washing away the cementitious materials.

9-03.1(2) Fine Aggregate for Portland Cement Concrete
This section is revised to read:

> Fine aggregate shall consist of natural sand or manufactured sand, or combinations thereof, accepted by the Engineer, having hard, strong, durable particles free from adherent coating. Fine aggregate shall be washed thoroughly to meet the specifications.

9-03.1(2)A Deleterious Substances
This section is revised to read:

> The amount of deleterious substances in the washed aggregate shall be tested in accordance with AASHTO M 6 and not exceed the following values:

INFORMATIONAL COPY ONLY - NOT FOR BIDDING

Material finer than No. 200 Sieve	2.5 percent by weight
Clay lumps and friable particles	3.0 percent by weight
Coal and lignite	0.25 percent by weight
Particles of specific gravity less than 2.00	1.0 percent by weight.

Organic impurities shall be tested in accordance with AASHTO T 21 by the glass color standard procedure and results darker than organic plate no. 3 shall be rejected. A darker color results from AASHTO T 21 may be used provided that when tested for the effect of organic impurities on strength of mortar, the relative strength at 7 days, calculated in accordance with AASHTO T 71, is not less than 95 percent.

9-03.1(4) Coarse Aggregate for Portland Cement Concrete

This section is revised to read:

Coarse aggregate for concrete shall consist of gravel, crushed gravel, crushed stone, or combinations thereof having hard, strong, durable pieces free from adherent coatings. Coarse aggregate shall be washed to meet the specifications.

9-03.1(4)A Deleterious

This section, including title, is revised to read:

9-03.1(4)A Deleterious Substances

The amount of deleterious substances in the washed aggregate shall be tested in accordance with AASHTO M 80 and not exceed the following values:

Material finer than No. 200	1.0[1] percent by weight
Clay lumps and Friable Particles	2.0 percent by weight
Shale	2.0 percent by weight
Wood waste	0.05 percent by weight
Coal and Lignite	0.5 percent by weight
Sum of Clay Lumps, Friable Particles, and Chert (Less Than 2.40 specific gravity SSD)	3.0 percent by weight

[1]If the material finer than the No. 200 sieve is free of clay and shale, this percentage may be increased to 1.5.

9-03.1(4)C Grading

The following new sentence is inserted at the beginning of the last pargraph:

Where coarse aggregate size 467 is used, the aggregate may be furnished in at least two separate sizes.

9-03.1(5) Combined Aggregate Gradation for Portland Cement Concrete

This section is revised to read:

As an alternative to using the fine aggregate sieve grading requirements in Section 9-03.1(2)B, and coarse aggregate sieve grading requirements in Section 9-03.1(4)C, a combined aggregate gradation conforming to the requirements of Section 9-03.1(5)A may be used.

INFORMATIONAL COPY ONLY - NOT FOR BIDDING

9-03.1(5)A Deleterious Substances

This section is revised to read:

The amount of deleterious substances in the washed aggregates ⅜ inch or larger shall not exceed the values specified in Section 9-03.1(4)A and for aggregates smaller than ⅜ inch they shall not exceed the values specified in Section 9-03.1(2)A.

9-03.1(5)B Grading

The first paragraph is deleted.

9-03.8(7) HMA Tolerances and Adjustments

In the table in item 1, the last column titled "Commercial Evaluation" is revised to read "Visual Evaluation".

9-03.21(1)B Concrete Rubble

This section, including title, is revised to read:

9-03.21(1)B Recycled Concrete Aggregate

Recycled concrete aggregates are coarse aggregates manufactured from hardened concrete mixtures. Recycled concrete aggregate may be used as coarse aggregate or blended with coarse aggregate for Commercial Concrete. Recycled concrete aggregate shall meet all of the requirements for coarse aggregate contained in Section 9-03.1(4) or 9-03.1(5). In addition to the requirements of Section 9-03.1(4) or 9-03.1(5), recycled concrete shall:

1. Contain an aggregated weight of less than 1 percent of adherent fines, vegetable matter, plastics, plaster, paper, gypsum board, metals, fabrics, wood, tile, glass, asphalt (bituminous) materials, brick, porcelain or other deleterious substance(s) not otherwise noted;
2. Be free of harmful components such as chlorides and reactive materials unless mitigation measures are taken to prevent recurrence in the new concrete;
3. Have an absorption of less than 10 percent when tested in accordance with AASHTO T 85.

Recycled concrete aggregate shall be in a saturated condition prior to mixing.

Recycled concrete aggregate shall not be placed below the ordinary high water mark of any water of the State.

9-03.21(1)D Recycled Steel Furnace Slag

This section title is revised to read:

Steel Furnace Slag

9-03.21(1)E Table on Maximum Allowable Percent (By Weight) of Recycled Material

The following new row is inserted after the second row:

Coarse Aggregate for Commercial Concrete	9-03.1(4)	0	100	0	0

INFORMATIONAL COPY ONLY - NOT FOR BIDDING

9-04.AP9

Section 9-04, Joint and Crack Sealing Materials
January 4, 2016

9-04.2(1) Hot Poured Joint Sealants
This section's content is deleted and replaced with the following new subsections:

9-04.2(1)A Hot Poured Sealant
Hot poured sealant shall be sampled in accordance with ASTM D5167 and tested in accordance with ASTM D5329. Hot poured sealant shall have a minimum Cleveland Open Cup Flash Point of 205°C in accordance with AASHTO T 48.

9-04.2(1)A1 Hot Poured Sealant for Cement Concrete Pavement
Hot poured sealant for cement concrete pavement shall meet the requirements of ASTM D6690 Type IV, except for the following:

1. The Cone Penetration at 25°C shall be 130 maximum.

2. The extension for the Bond, non-immersed, shall be 100 percent.

9-04.2(1)A2 Hot Poured Sealant for Bituminous Pavement
Hot poured sealant for bituminous pavement shall meet the requirements of ASTM D6690 Type II.

9-04.2(1)B Sand Slurry for Bituminous Pavement
Sand slurry is mixture consisting of the following components measured by total weight:

1. Twenty percent CSS-1 emulsified asphalt,

2. Two percent portland cement, and

3. Seventy-eight percent fine aggregate meeting the requirements of 9-03.1(2)B Class 2. Fine aggregate may be damp (no free water).

9-07.AP9

Section 9-07, Reinforcing Steel
January 4, 2016

9-07.1(1)A Acceptance of Materials
The first sentence of the first paragraph is revised to read:

Reinforcing steel rebar manufacturers shall comply with the National Transportation Product Evaluation Program (NTPEP) Work Plan for Reinforcing Steel (rebar) Manufacturers.

The first sentence of the second paragraph is revised to read:

Steel reinforcing bar manufacturers use either English or a Metric size designation while stamping rebar.

INFORMATIONAL COPY ONLY - NOT FOR BIDDING

Appendix E

Plans
(Bound Separately)

INFORMATIONAL COPY ONLY- NOT FOR BIDDING

Appendix F

WSDOT Standard Plans

INFORMATIONAL COPY ONLY- NOT FOR BIDDING

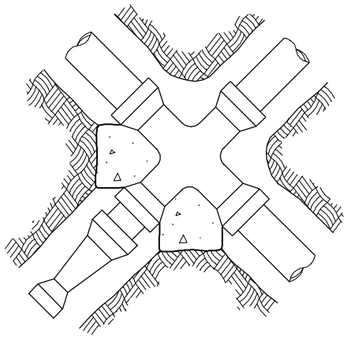

PLAN VIEW

UNBALANCED CROSS

(USE COLUMN **A**)

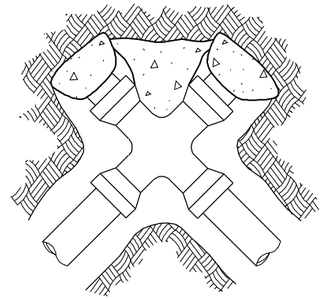

PLAN VIEW

PLUGGED CROSS

(USE COLUMN **B**)

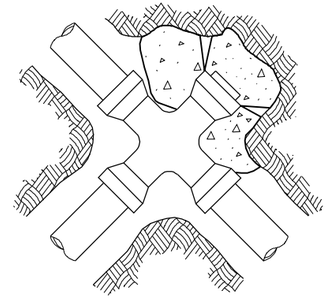

PLAN VIEW

PLUGGED CROSS

(USE COLUMN **A**)

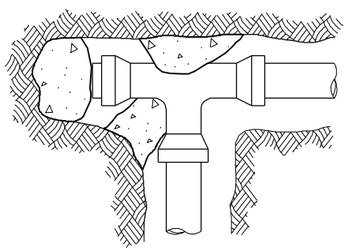

PLAN VIEW

PLUGGED TEE

(USE COLUMN **B**)

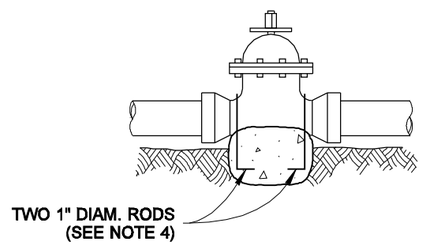

PROFILE VIEW

VALVE

(USE COLUMN **A**)

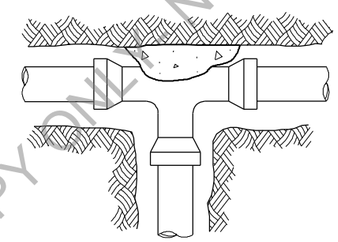

PLAN VIEW

TEE

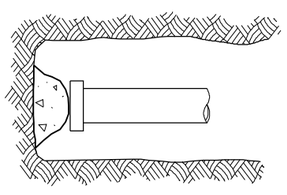

PLAN VIEW

DEAD END

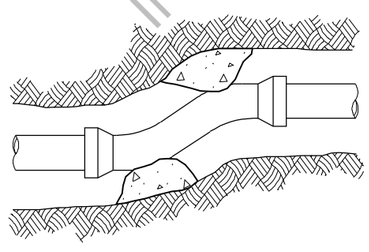

OFFSET

(USE COLUMNS **B ~ E**)

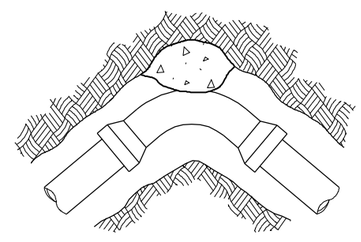

BEND

INFORMATIONAL COPY ONLY - NOT FOR BIDDING

NOTES

1. Contractor to provide blocking adequate to withstand full test pressure.
2. Divide thrust by safe bearing load to determine required area (in square feet) of concrete to distribute load.
3. Areas to be adjusted for other pressure conditions.
4. Provide two 1" minimum diameter rods on valves up through 10" diameter. Valves larger than 10" require special tie rod design.

SIZE	TEST PRESSURE (PSI)	THRUST AT FITTINGS IN POUNDS				
		A	B	C	D	E
		TEE AND DEAD ENDS	90° BEND	45° BEND	22.5° BEND	11.25° BEND
4"	250	3,140	4,440	2,405	1,225	615
6"	250	7,070	9,995	5,410	2,760	1,385
8"	250	12,565	17,770	9,620	4,905	2,465
10"	250	19,635	27,770	15,030	7,660	3,850
12"	250	28,275	39,985	21,640	11,030	5,545
14"	250	38,485	54,425	29,455	15,015	7,545
16"	250	50,265	71,085	38,470	19,615	9,855

SOIL TYPE	SAFE BEARING LOAD (PSF)
MUCK, PEAT, ETC.	0
SOFT CLAY	1,000
SAND	2,000
SAND AND GRAVEL	3,000
SAND AND GRAVEL CEMENTED WITH CLAY	4,000
HARD SHALE	10,000

NOTE: THIS PLAN IS NOT A LEGAL ENGINEERING DOCUMENT BUT AN ELECTRONIC DUPLICATE. THE ORIGINAL, SIGNED BY THE ENGINEER AND APPROVED FOR PUBLICATION, IS KEPT ON FILE AT THE WASHINGTON STATE DEPARTMENT OF TRANSPORTATION. A COPY MAY BE OBTAINED UPON REQUEST.

CONCRETE THRUST BLOCK

STANDARD PLAN B-90.40-00

SHEET 1 OF 1 SHEET

APPROVED FOR PUBLICATION

Harold J. Peterfeso — STATE DESIGN ENGINEER

06-08-06 — DATE

Washington State Department of Transportation

DRAWN BY: COLBY FLETCHER

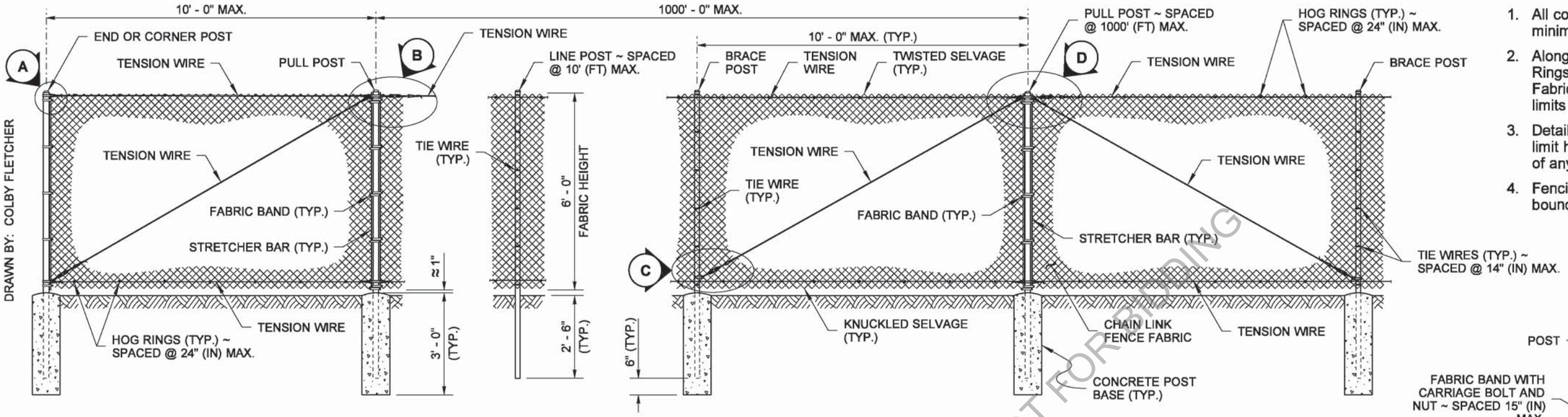

TYPE 3

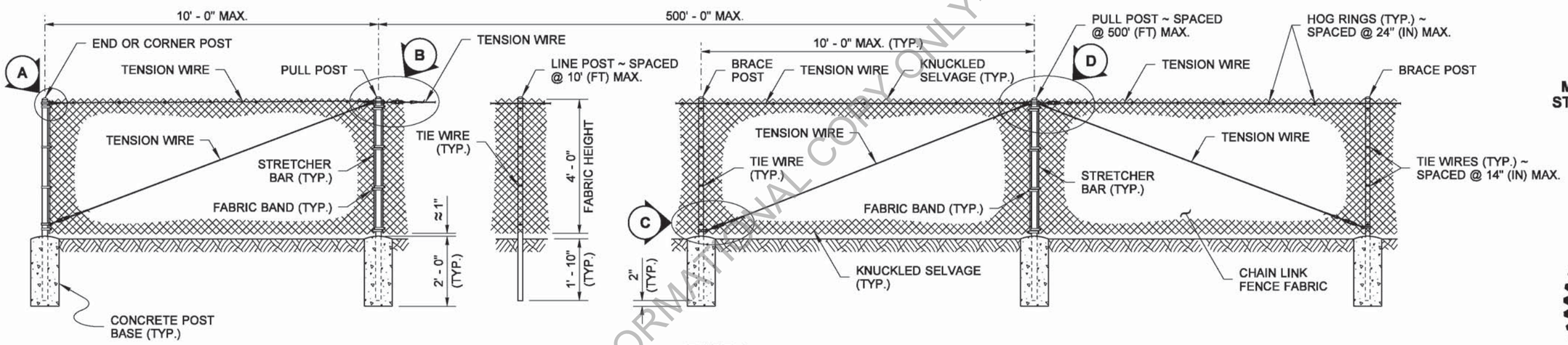

TYPE 4

NOTES

1. All concrete post bases shall be 10" (in) minimum diameter.
2. Along the top and bottom, using Hog Rings, fasten the Chain Link Fence Fabric to the Tension Wire within the limits of the first full fabric weave.
3. Details are illustrative and shall not limit hardware design or post selection of any particular fence type.
4. Fencing shall be used for security and boundary delineation only.

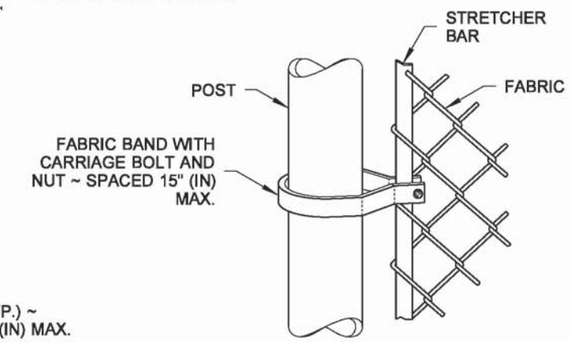

METHOD OF FASTENING STRETCHER BAR TO POST

POST AND RAIL SPECIFICATIONS			
POST	PIPE	ROLL FORMED	
	NOM. SIZE (SCH. 40) I.D.	SECTION	WEIGHT (lb/ft)
END, CORNER, OR PULL POST	2 1/2" DIAM.	Y	5.10
LINE OR BRACE POST	2" DIAM.	Z	1.85

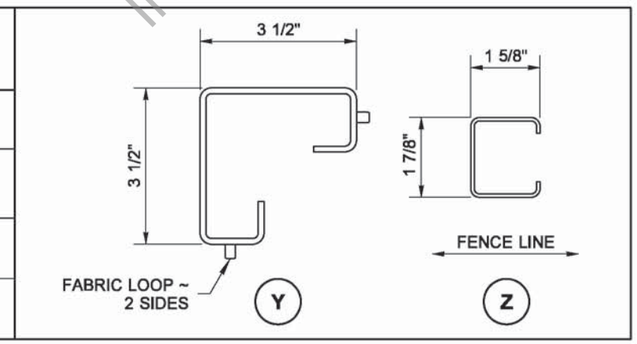

INFORMATIONAL COPY ONLY - NOT FOR BIDDING

EDWARD PATRICK BARRY
STATE OF WASHINGTON
34363
REGISTERED
PROFESSIONAL ENGINEER

Barry, Ed
Jul 14 2015 11:14 AM

CHAIN LINK FENCE TYPES 3 AND 4

STANDARD PLAN L-20.10-03

SHEET 1 OF 2 SHEETS

APPROVED FOR PUBLICATION
Carpenter, Jeff
Jul 14 2015 11:24 AM
STATE DESIGN ENGINEER
Washington State Department of Transportation

DRAWN BY: COLBY FLETCHER

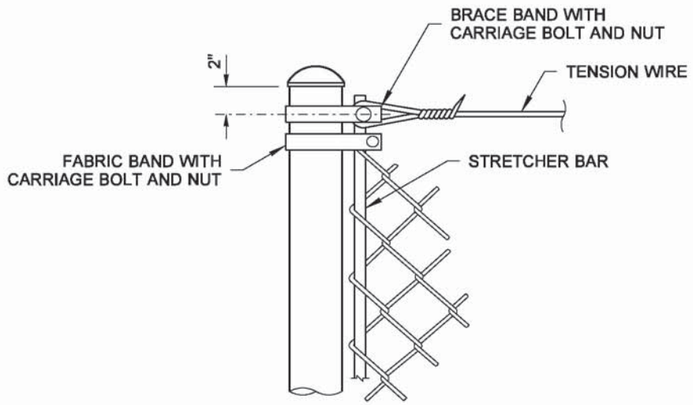

END OR CORNER POST

DETAIL A

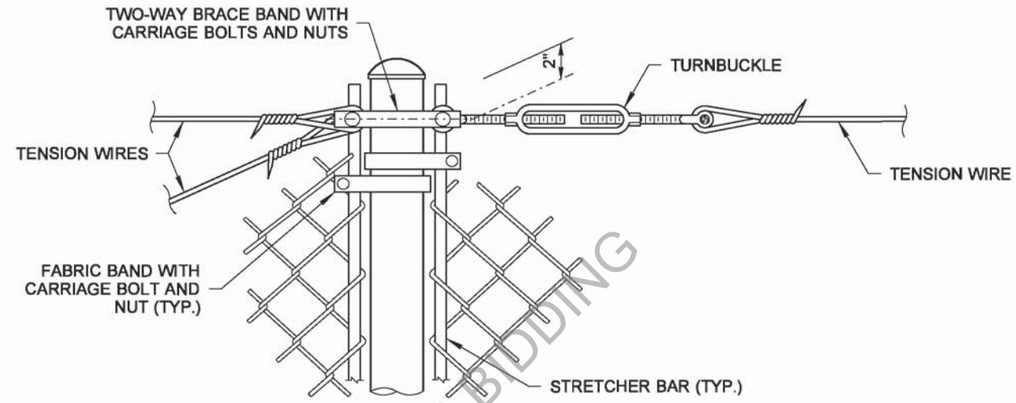

PULL POST (AT END OR CORNER)

DETAIL B

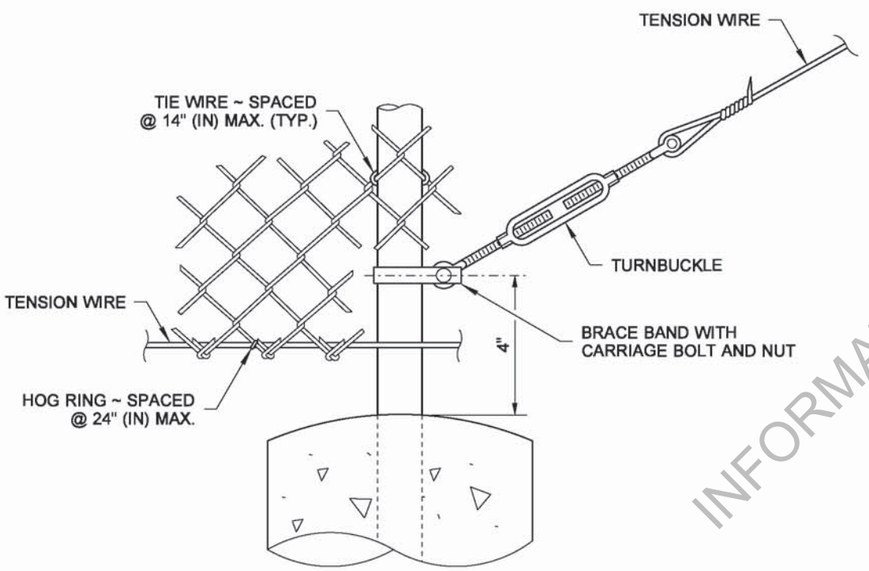

BRACE POST

DETAIL C

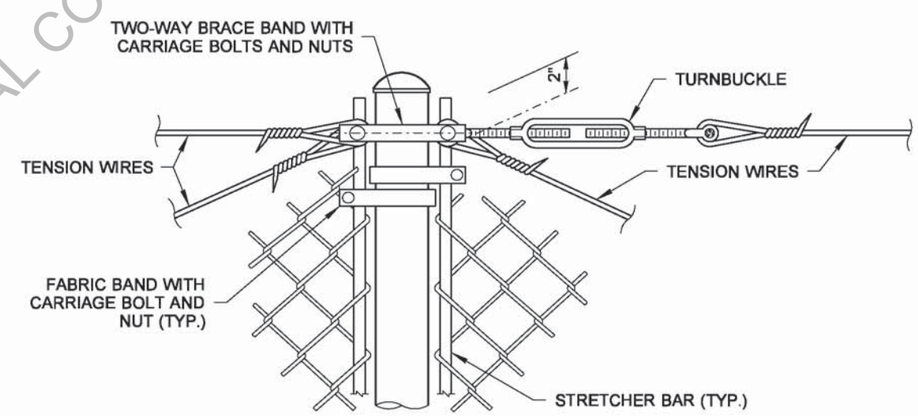

PULL POST (WITHIN RUN)

DETAIL D

INFORMATIONAL COPY ONLY - NOT FOR BIDDING

Barry, Ed
Jul 14 2015 11:14 AM

CHAIN LINK FENCE TYPES 3 AND 4

STANDARD PLAN L-20.10-03

SHEET 2 OF 2 SHEETS

APPROVED FOR PUBLICATION
Carpenter, Jeff
Jul 14 2015 11:25 AM
STATE DESIGN ENGINEER

Washington State Department of Transportation

NOTES

1. Materials shall meet the requirements of **Standard Specification 9-16**.

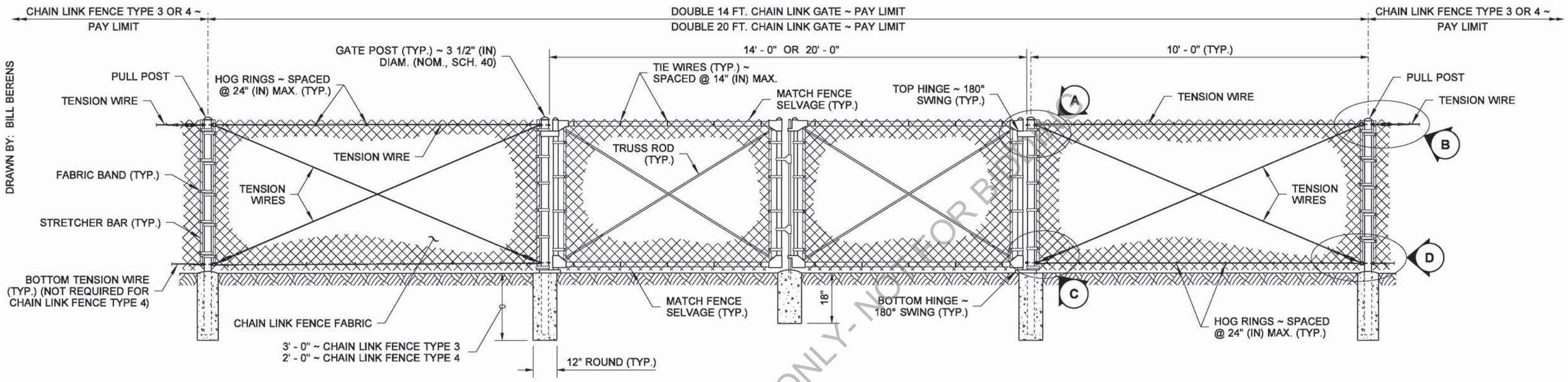

DOUBLE GATE

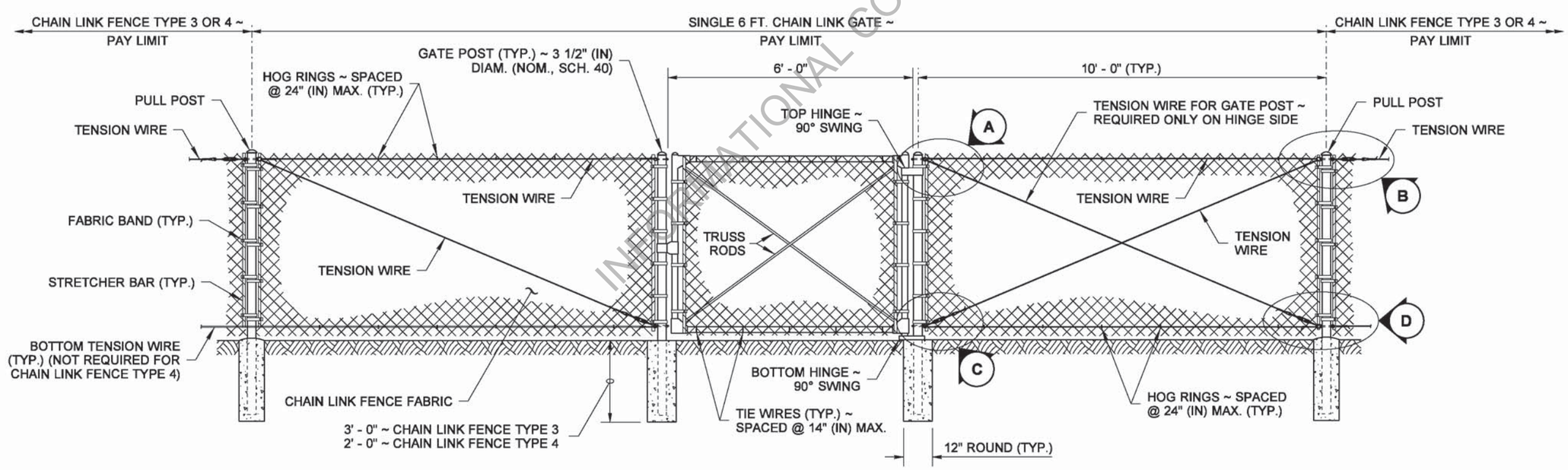

SINGLE GATE

INFORMATIONAL COPY ONLY - NOT FOR BIDDING

Barry, Ed
May 6 2014 3:57 PM

CHAIN LINK GATE

STANDARD PLAN L-30.10-02

SHEET 1 OF 2 SHEETS

APPROVED FOR PUBLICATION
Bakotich, Pasco
Jun 11 2014 1:40 PM

STATE DESIGN ENGINEER

Washington State Department of Transportation

DRAWN BY: BILL BERENS

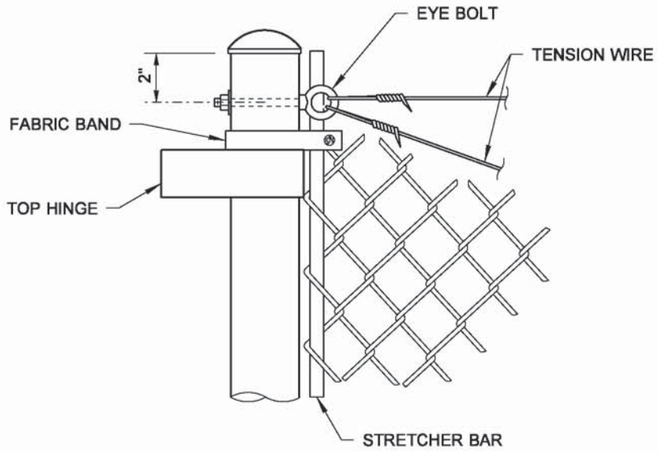

GATE POST

DETAIL (A)

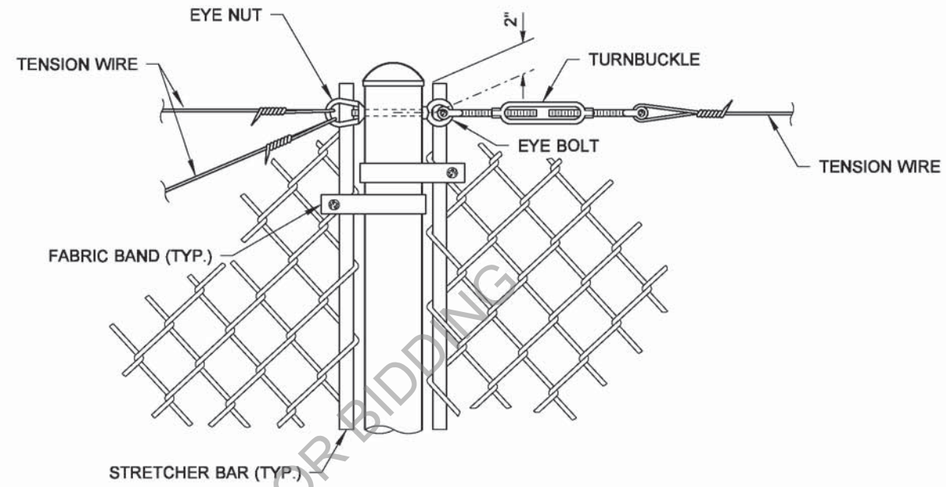

PULL POST

DETAIL (B)

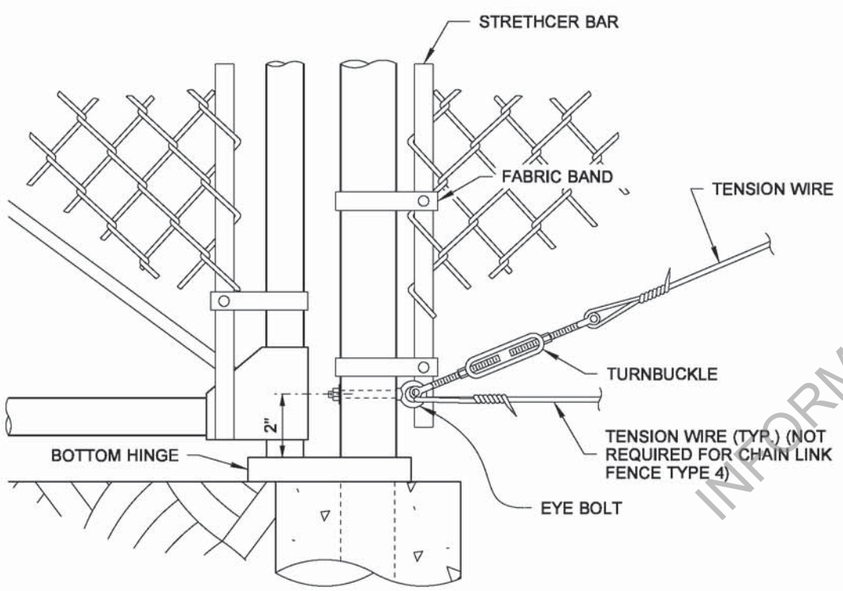

GATE POST

DETAIL (C)

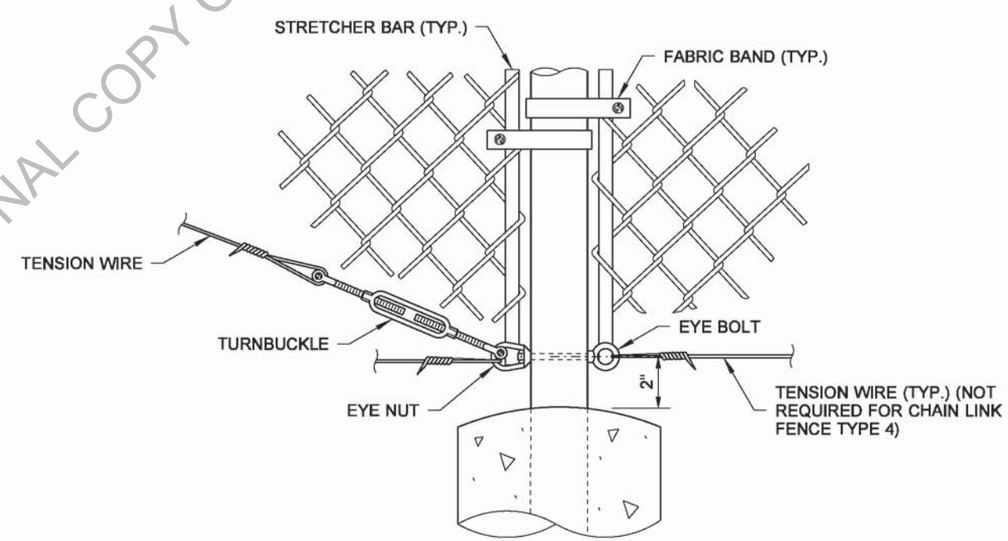

PULL POST

DETAIL (D)

INFORMATIONAL COPY ONLY - NOT FOR BIDDING

EDWARD PATRICK BARRY
STATE OF WASHINGTON
34363
REGISTERED
PROFESSIONAL ENGINEER

Barry, Ed
May 6 2014 3:58 PM

CHAIN LINK GATE

STANDARD PLAN L-30.10-02

SHEET 2 OF 2 SHEETS

APPROVED FOR PUBLICATION
Bakotich, Pasco
Jun 11 2014 1:41 PM

STATE DESIGN ENGINEER

Washington State Department of Transportation