GRANT COUNTY
PUBLIC WORKS DEPARTMENT

Jeff Tincher, P.E.
Director of Public Works and
County Road Engineer
Ephrata (509) 754-6082

Jerome Wawers
Assistant Director of Public Works
Ephrata (509) 754-6082

Todd Mittge, P.E.
Assistant County Road Engineer
Ephrata (509) 754-6082

Robert Bersanti
Design/Construction Engineer
Ephrata (509) 754-6082

Steve Hill
Supervisor
Road District #1
Ephrata (509) 754-6586

Dennis Collier, Supervisor
Road District #2
Moses Lake (509) 765-4172

John Brissey, Supervisor
Road District #3
Quincy (509) 787-2321

Andrew Booth, Supervisor
Bridges
Ephrata (509) 754-6082

Janice Goeden, Supervisor
Solid Waste
Ephrata (509) 754-4319

CONTRACT PROVISIONS and PLANS

For Construction of:

BRIDGE #399, W-NW BRIDGE REPLACEMENT PROJECT
CRP 13-02
BROS-2013(078)

Sealed Bids will be Opened on
April 14, 2015
at
1:30 P.M.
at the Office of the
Board of County Commissioners
Grant County Courthouse
P.O. Box 37
35 C Street NW, Room 207
Ephrata, Washington 98823

INFORMATIONAL COPY ONLY, NOT FOR BIDDING PURPOSES

NOTICE TO CONTRACTORS

Sealed bids, plainly marked **"BID FOR BRIDGE #399, W-NW BRIDGE REPLACEMENT PROJECT, CRP 13-02"**, will be received by Grant County at the Office of the Board of County Commissioners located in the County Courthouse, P.O. Box 37, 35 C Street NW – Room 207, Ephrata, WA, 98823, until **1:30 P.M., Tuesday, April 14, 2015** and will then and there be opened and publicly read for the construction of the improvements.

All bid proposals shall be accompanied by a bid proposal deposit in cash, certified check, cashier's check, or surety bond in an amount equal to five percent (5%) of the amount of such bid proposal. No conditional bid bond will be accepted. Should the successful bidder fail to enter into such contract and furnish a satisfactory performance bond within the time stated in the specifications, the bid proposal deposit shall be forfeited to Grant County.

Maps, plans and specifications may be purchased from the office of the County Engineer, 124 Enterprise St. S.E., Ephrata, WA 98823, upon payment of the amount of $25.00 (non-refundable).

Informational copies of the maps, plans and specifications are on file for inspection at the Grant County Public Works Building, 124 Enterprise St. S.E., Ephrata, WA 98823, and in various plan centers located in Washington.

The following is applicable to federal-aid projects: The Grant County Department of Public Works in accordance with Title VI of the Civil Rights Act of 1964, 78 Stat. 252, 42 U.S.C. 2000d to 2000d-4 and Title 49, Code of Federal Regulations, Department of Transportation, subtitle A, Office of the Secretary, Part 21, Nondiscrimination in federally assisted programs of the Department of Transportation issued pursuant to such Act, hereby notifies all bidders that it will affirmatively insure that in any contract entered into pursuant to this advertisement, disadvantaged business enterprises as defined at 49 CFR Part 26 will be afforded full opportunity to submit bids in response to this invitation and will not be discriminated against on the grounds of race, color, national origin, or sex in consideration for an award.

The Board of County Commissioners of Grant County, Washington, reserves the right to reject any and all bids. The award of this contract, if made, will be to the lowest responsible bidder.

The improvement for which bids will be received follows:

BRIDGE #399, W-NW BRIDGE REPLACEMENT PROJECT – CRP 13-02
This contract provides for the replacement of an existing bridge on a county road in Grant County, WA, and includes removal of the existing bridge, providing a temporary bridge, roadway excavation, embankment compaction, crushed surfacing base course, top course, concrete class 4000 for abutment footings and walls, superstructure for Bridge #399, beam guardrail, and other work all in accordance with the attached Contract Plans, these Contract Provisions and the Standard Specifications.

INFORMATIONAL COPY ONLY, NOT FOR BIDDING PURPOSES

GRANT COUNTY PUBLIC WORKS

CRP 13-02

BRIDGE #399, W-NW BRIDGE REPLACEMENT PROJECT

NOTICE TO ALL PLANHOLDERS

Grant County Department of Public Works may be contacted to answer questions regarding these bid documents and to show this project to prospective bidders is:
Grant County Department of Public Works

124 Enterprise St. S.E.
Ephrata, WA. 98823
Phone: (509)754-6082 Fax (509)754-6082

As the Engineer in direct responsible charge of developing these contract provisions, I certify these provisions have been developed or incorporated into this project under my direct supervision, or as a result of certified recommendations provided by other licensed professionals.

Jeffrey C. Tincher P.E. 3/19/2015
County Road Engineer Date

INFORMATIONAL COPY ONLY, NOT FOR BIDDING PURPOSES

BIDDER'S CHECK LIST

The bidder's attention is especially called to the following forms which must be executed in full as required:

(A) PROPOSAL

The unit prices bid must be shown in the spaces provided. Show unit prices in figures only. All extensions of the unit prices must be shown in the spaces provided.

(B) PROPOSAL SIGNATURE SHEET

To be filled in and signed by the bidder.

(C) STATEMENT OF CONTRACTOR QUALIFICATIONS

To be filled in and signed by the bidder.

(D) BID BOND

This form is to be executed by the bidder and his surety company unless the bid is accompanied by cash, certified or cashier's check. The amount of this bond shall be equal to 5% of the total amount bid and may be shown in dollars or on a percentage basis.

(E) Non-Collusion Declaration (272-036I). To be submitted with the bid proposal

(F) Local Agency Subcontractor List (271-015A)

Prepared in compliance with RCW 39.30.060 as amended. If applicable, to be submitted with the bid proposal

(G) Local Agency Disadvantaged Business Enterprise Utilization Certification (272-056A). If applicable, to be submitted with the bid proposal

(H) Instructions for Disadvantaged Business Enterprise Utilization Certification (272-056)

(I) Local Agency Disadvantaged Business Enterprise (DBE) Written Confirmation Document (422-031A). If applicable, to be submitted with the bid proposal

The following forms are to be executed after the contract is awarded:

(J) CONTRACT

This agreement is to be executed by the successful bidder, his surety company, and Grant County.

(K) CONTRACT BOND

To be executed by the successful bidder and his surety company.

INFORMATIONAL COPY ONLY NOT FOR BIDDING PURPOSES

TABLE OF CONTENTS

AMENDMENTS TO THE STANDARD SPECIFICATIONS 1

SPECIAL PROVISIONS 67

DIVISION 1 GENERAL REQUIREMENTS 67

BID PROCEDURES AND CONDITIONS 69

AWARD AND EXECUTION OF CONTRACT 74

SCOPE OF THE WORK 75

CONTROL OF WORK 75

CONTROL OF MATERIAL 79

LEGAL RELATIONS AND RESPONSIBILITIES TO THE PUBLIC 80

PROSECUTION AND PROGRESS 107

RETAINAGE 112

TEMPORARY TRAFFIC CONTROL 113

DIVISION 2 EARTHWORK 115

CLEARING, GRUBBING, AND ROADSIDE CLEANUP 115

REMOVAL OF STRUCTURES AND OBSTRUCTIONS 116

ROADWAY EXCAVATION AND EMBANKMENT 117

STRUCTURE EXCAVATION 117

DIVISION 3 PRODUCTION FROM QUARRY AND PIT SITES AND STOCKPILING 118

PRODUCTION FROM QUARRY AND PIT SITES 118

STOCKPILING AGGREGATES 118

SITE RECLAMATION 119

INFORMATIONAL COPY ONLY, NOT FOR BIDDING PURPOSES

DIVISION 4 BASES **119**

BALLAST AND CRUSHED SURFACING **119**

DIVISION 5 SURFACE TREATMENTS AND PAVEMENTS **120**

HOT MIX ASPHALT **120**

DIVISION 6 STRUCTURES **123**

GENERAL REQUIREMENTS FOR STRUCTURES **123**

BRIDGE RAILINGS **130**

Proposal ..... Proposal Page 1 - 8

Contract ..... Contract Page 1 -4

Appendices

Title VI – Contractor Requirements
Federal Aid Provisions
Wage Rates – Federal
Wage Rates – State
Appendix A - Geotechnical Report
Appendix B - BNSF Overpass Agreement
    Exhibit A – Easement Display
    Exhibit C - Contractor Requirements
    Exhibit C-1 - Agreement Between BNSF Railway Company and the Contractor
    Exhibit F – BNSF Bridge Requirements
Standard Plans
Plans

INFORMATIONAL COPY ONLY, NOT FOR BIDDING PURPOSES

INFORMATIONAL COPY ONLY, NOT FOR BIDDING PURPOSES

INTRODUCTION

The following Amendments and Special Provisions shall be used in conjunction with the 2014 Standard Specifications for Road, Bridge, and Municipal Construction.

AMENDMENTS TO THE STANDARD SPECIFICATIONS

The following Amendments to the Standard Specifications are made a part of this contract and supersede any conflicting provisions of the Standard Specifications. For informational purposes, the date following each Amendment title indicates the implementation date of the Amendment or the latest date of revision.

Each Amendment contains all current revisions to the applicable section of the Standard Specifications and may include references which do not apply to this particular project.

Section 1-01, Definitions and Terms
August 4, 2014

1-01.3 Definitions

The definition for "**Engineer**" is revised to read:

> The Contracting Agency's representative who directly supervises the engineering and administration of a construction Contract.

The definition for "**Inspector**" is revised to read:

> The Engineer's representative who inspects Contract performance in detail.

The definition for "**Project Engineer**" is revised to read:

> Same as Engineer.

The definition for "**Working Drawings**" is revised to read:

> Drawings, plans, diagrams, or any other supplementary data or calculations, including a schedule of submittal dates for Working Drawings where specified, which the Contractor must submit to the Engineer.

Section 1-02, Bid Procedures and Conditions
April 7, 2014

1-02.8(1) Noncollusion Declaration

The third paragraph is revised to read:

> Therefore, by including the Non-collusion Declaration as part of the signed bid Proposal, the Bidder is deemed to have certified and agreed to the requirements of the Declaration.

INFORMATIONAL COPY ONLY, NOT FOR BIDDING PURPOSES

Section 1-03, Award and Execution of Contract
January 5, 2015

1-03.3 Execution of Contract

The first paragraph is revised to read:

> Within 20 calendar days after the Award date, the successful Bidder shall return the signed Contracting Agency-prepared Contract, an insurance certification as required by Section 1-07.18, and a satisfactory bond as required by law and Section 1-03.4, and shall be registered as a contractor in the state of Washington.

1-03.4 Contract Bond

The last word of item 3 is deleted.

Item 4 is renumbered to 5.

The following is inserted after item 3 (after the preceding Amendments are applied):

> 4. Be conditioned upon the payment of taxes, increases, and penalties incurred on the project under titles 50, 51, and 82 RCW; and

1-03.5 Failure to Execute Contract

The first sentence is revised to read:

> Failure to return the insurance certification and bond with the signed Contract as required in Section 1-03.3, or failure to provide Disadvantaged, Minority or Women's Business Enterprise information if required in the Contract, or failure or refusal to sign the Contract, or failure to register as a contractor in the state of Washington shall result in forfeiture of the proposal bond or deposit of this Bidder.

Section 1-04, Scope of the Work
August 4, 2014

1-04.4 Changes

In the third paragraph, item number 1 and 2 are revised to read:

> A. When the character of the Work as altered differs materially in kind or nature from that involved or included in the original proposed construction; or
>
> B. When an item of Work, as defined elsewhere in the Contract, is increased in excess of 125 percent or decreased below 75 percent of the original Contract quantity. For the purpose of this Section, an item of Work will be defined as any item that qualifies for adjustment under the provisions of Section 1-04.6.

The last two paragraphs are deleted.

This section is supplemented with the following new subsections:

INFORMATIONAL COPY ONLY, NOT FOR BIDDING PURPOSES

1-04.4(2) Value Engineering Change Proposal (VECP)

1-04.4(2)A General

A VECP is a Contractor proposed change to the Contract Provisions which will accomplish the projects functional requirements in a manner that is equal to or better than the requirements in the Contract. The VECP may be: (1) at a less cost or time, or (2) either no cost savings or a minor increase in cost with a reduction in Contract time. The net savings or added costs to the Contract Work are shared by the Contractor and Contracting Agency.

The Contractor may submit a VECP for changing the Plans, Specifications, or other requirements of the Contract. The Engineer's decision to accept or reject all or part of the proposal is final and not subject to arbitration under the arbitration clause or otherwise subject to litigation.

The VECP shall meet all of the following:

1. Not adversely affect the long term life cycle costs.
2. Not adversely impact the ability to perform maintenance.
3. Provide the required safety and appearance.
4. Provide substitution for deleted or reduced Disadvantaged Business Enterprise Condition of Award Work, Apprentice Utilization and Training.

VECPs that provide a time reduction shall meet the following requirements:

1. Time saving is a direct result of the VECP.
2. Liquidated damages penalties are not used to calculate savings.
3. Administrative/overhead cost savings experienced by either the Contractor or Contracting Agency as a result of time reduction accrue to each party and are not used to calculate savings.

1-04.4(2)B VECP Savings

1-04.4(2)B1 Proposal Savings

The incentive payment to the Contractor shall be one-half of the net savings of the proposal calculated as follows:

1. (gross cost of deleted work) – (gross cost of added work) = (gross savings)
2. (gross savings) – (Contractor's engineering costs) – (Contracting Agency's costs) = (net savings)
3. (net savings) / 2 = (incentive pay)

The Contracting Agency's costs shall be the actual consultant costs billed to the Contracting Agency and in-house costs. Costs for personnel assigned to the Engineer's office shall not be included.

INFORMATIONAL COPY ONLY / NOT FOR BIDDING PURPOSES

1-04.4(2)B2 Added Costs to Achieve Time Savings

The cost to achieve the time savings shall be calculated as follows:

1. (cost of added work) + (Contractor's engineering costs - Contracting Agency's engineering costs) = (cost to achieve time savings)

2. (cost to achieve time savings) / 2 = (Contracting Agency's share of added cost)

If the timesaving proposal also involves deleting work and, as a result, creates a savings for the Contracting Agency, then the Contractor shall also receive one-half of the savings realized through the deletion.

1-04.4(2)C VECP Approval

1-04.4(2)C1 Concept Approval

The Contractor shall submit a written proposal to the Engineer for consideration. The proposal shall contain the following information:

1. An explanation outlining the benefit provided by the change(s).

2. A narrative description of the proposed change(s). If applicable, the discussion shall include a demonstration of functional equivalency or a description of how the proposal meets the original contract scope of work.

3. A cost discussion estimating any net savings. Savings estimates will generally follow the outline below under the section, "Proposal Savings".

4. A statement providing the Contracting Agency with the right to use all or any part of the proposal on future projects without future obligation or compensation.

5. A statement acknowledging and agreeing that the Engineer's decision to accept or reject all or part of the proposal is final and not subject to arbitration under the arbitration clause or otherwise be subject to claims or disputes.

6. A statement giving the dates the Engineer must make a decision to accept or reject the conceptual proposal, the date that approval to proceed must be received, and the date the work must begin in order to not delay the contract. If the Contracting Agency does not approve the VECP by the date specified by the Contractor in their proposal the VECP will be deemed rejected.

7. The submittal will include an analysis on other Work that may have costs that changed as a result of the VECP. Traffic control and erosion control shall both be included in addition to any other impacted Work.

After review of the proposal, the Engineer will respond in writing with acceptance or rejection of the concept. This acceptance shall not be construed as authority to proceed with any change contract work. Concept approval allows the Contractor to proceed with the Work needed to develop final plans and other information to receive formal approval and to support preparation of a change order.

INFORMATIONAL COPY ONLY, NOT FOR BIDDING PURPOSES

1-04.4(2)C2 Formal Approval

The Contractor's submittal to the Engineer for formal approval shall include the following:

1. Deleted Work – Include the calculated quantities of unit price Work to be deleted. Include the proposed partial prices for portions of lump sum Work deleted. For deletion of force account items include the time and material estimates.

2. Added Work – Include the calculated quantities of unit price Work to be added, either by original unit Contract prices or by new, negotiated unit prices. For new items of Work include the quantities and proposed prices.

3. Contractor's Engineering Costs – Submit the labor costs for the engineering to develop the proposal; costs for Contractor employees utilized in contract operations on a regular basis shall not be included.

4. Schedule Analysis – If the VECP is related to time savings, the Contractor shall submit a partial progress schedule showing the changed Work. The submittal shall also include a discussion comparing the partial progress schedule with the approved progress schedule for the project.

5. Working Drawings – Type 3 Working Drawings shall be submitted; those drawings which require engineering shall be a Type 3E.

Formal approval of the proposal will be documented by issuance of a change order. The VECP change order will contain the following statements which the Contractor agrees to by signing the change order:

1. The Contractor accepts design risk of all features, both temporary and permanent, of the changed Work.

2. The Contractor accepts risk of constructability of the changed Work.

3. The Contractor provides the Contracting Agency with the right to use all or any part of the proposal on future projects without further obligation or compensation.

VECP change orders will contain separate pay items for the items that are applicable to the Proposal. These are as follows:

1. Deleted Work.

2. Added Work.

3. The Contractor's engineering costs, reimbursed at 100 percent of the Contractor's cost.

4. Incentive payment to the Contractor.

When added Work costs exceed Deleted Work costs, but time savings make a viable proposal, then items 3 and 4 above are replaced with the following:

INFORMATIONAL COPY ONLY NOT FOR BIDDING PURPOSES

3. The Contracting Agency's share of added cost to achieve time savings.

4. The Contractor's share of savings from deleted Work.

1-04.4(2)C3 Authority to Proceed with Changed Work
The authority for the Contractor to proceed with the VECP Work will be provided by one of the following options:

1. Execution of the VECP change order, or

2. At the Contractor's request the Contracting Agency may provide approval by letter from the Engineer for the Work to proceed prior to execution of a change order. All of the risk for proceeding with the VECP shall be the responsibility of the Contractor. Additionally, the following criteria are required to have been met:

   a) Concept approval has been granted by the Contracting Agency.

   b) All design reviews and approvals have been completed, including plans and specifications.

   c) The Contractor has guaranteed, in writing, the minimum savings to the Contracting Agency.

Section 1-05, Control of Work
August 4, 2014

1-05.1 Authority of the Engineer
In this section, "Project Engineer" is revised to read "Engineer".

The second paragraph (up until the colon) is revised to read:

The Engineer's decisions will be final on all questions including the following:

The first sentence in the third paragraph is revised to read:

The Engineer represents the Contracting Agency with full authority to enforce Contract requirements.

1-05.2 Authority of Assistants and Inspectors
The first paragraph is revised to read:

The Engineer may appoint assistants and Inspectors to assist in determining that the Work and materials meet the Contract requirements. Assistants and Inspectors have the authority to reject defective material and suspend Work that is being done improperly, subject to the final decisions of the Engineer.

In the third paragraph, "Project Engineer" is revised to read "Engineer".

1-05.3 Plans and Working Drawings
This section's title is revised to read:

INFORMATIONAL COPY ONLY, NOT FOR BIDDING PURPOSES

Working Drawings

This section is revised to read:

The Contract may require the Contractor to submit Working Drawings for the performance of the Work. Working Drawings shall be submitted by the Contractor electronically to the Engineer in PDF format; drawing details shall be prepared in accordance with conventional detailing practices. If the PDF format is found to be unacceptable, at the request of the Engineer, the Contractor shall provide paper copies of the Working Drawings with drawings on 11 by 17 inch sheets and calculations/text on 8½ by 11 inch sheets.

Working Drawings will be classified under the following categories:

1. **Type 1** – Submitted for Contracting Agency information. Submittal must be received by the Contracting Agency a minimum of 7 calendar days before work represented by the submittal begins.

2. **Type 2** – Submitted for Contracting Agency review and comment. Unless otherwise stated in the Contract, the Engineer will require up to 20 calendar days from the date the Working Drawing is received until it is returned to the Contractor. The Contractor shall not proceed with the Work represented by the Working Drawing until comments from the Engineer have been addressed.

3. **Type 2E** – Same as a Type 2 Working Drawing with Engineering as described below.

4. **Type 3** – Submitted for Contracting Agency review and approval. Unless otherwise stated in the Contract, the Engineer will require up to 30 calendar days from the date the Working Drawing is received until it is returned to the Contractor. The Contractor shall obtain the Engineer's written approval before proceeding with the Work represented by the Working Drawing.

5. **Type 3E** – Same as a Type 3 Working Drawing with Engineering as described below.

All Working Drawings shall be considered Type 3 Working Drawings except as specifically noted otherwise in the Contract. Unless designated otherwise by the Contractor, submittals of Working Drawings will be reviewed in the order they are received by the Engineer. In the event that several Working Drawings are received simultaneously, the Contractor shall specify the sequence in which they are to be reviewed. If the Contractor does not submit a review sequence for simultaneous Working Drawing submittals, the review sequence will be at the Engineer's discretion.

Working Drawings requiring Engineering, Type 2E and 3E, shall be prepared by (or under the direction of) a Professional Engineer, licensed under Title 18 RCW, State of Washington, and in accordance with WAC 196-23-020. Design calculations shall carry the Professional Engineer's signature and seal, date of signature, and registration number on the cover page. The cover page shall also include the Contract number, Contract title and sequential index to calculation page numbers.

If more than the specified number of days is required for the Engineer's review of any individual Working Drawing or resubmittal, an extension of time will be considered in accordance with Section 1-08.8.

INFORMATIONAL COPY ONLY, NOT FOR BIDDING PURPOSES

Review or approval of Working Drawings shall neither confer upon the Contracting Agency nor relieve the Contractor of any responsibility for the accuracy of the drawings or their conformity with the Contract. The Contractor shall bear all risk and all costs of any Work delays caused by rejection or nonapproval of Working Drawings.

Unit Bid prices shall cover all costs of Working Drawings.

Section 1-07, Legal Relations and Responsibilities to the Public
January 5, 2015

1-07.2 State Taxes

This section is revised to read:

The Washington State Department of Revenue has issued special rules on the state sales tax. Sections 1-07.2(1) through 1-07.2(3) are meant to clarify those rules. The Contracting Agency will not adjust its payment if the Contractor bases a Bid on a misunderstood tax liability.

The Contracting Agency may deduct from its payments to the Contractor, retainage or lien the bond, in the amount the Contractor owes the State Department of Revenue, whether the amount owed relates to the Contract in question or not. Any amount so deducted will be paid into the proper State fund on the contractor's behalf. For additional information on tax rates and application refer to applicable RCWs, WACs or the Department of Revenue's website.

1-07.2(1) State Sales Tax: Work Performed on City, County, or Federally-Owned Land

This section including title is revised to read:

1-07.2(1) State Sales Tax: WAC 458-20-171 – Use Tax

For Work designated as Rule 171, **Use Tax,** the Contractor shall include for compensation the amount of any taxes paid in the various unit Bid prices or other Contract amounts. Typically, these taxes are collected on materials incorporated into the project and items such as the purchase or rental of; tools, machinery, equipment, or consumable supplies not integrated into the project.

The Summary of Quantities in the Contract Plans identifies those parts of the project that are subject to **Use Tax** under Section 1-07.2(1).

1-07.2(2) State Sales Tax: Work on State-Owned or Private Land

This section including title is revised to read:

1-07.2(2) State Sales Tax: WAC 458-20-170 – Retail Sales Tax

For Work designated as Rule 170, **Retail Sales Tax,** the Contractor shall collect from the Contracting Agency, **Retail Sales Tax** on the full Contract price. The Contracting Agency will automatically add this **Retail Sales Tax** to each payment to the Contractor and for this reason; the Contractor shall not include the **Retail Sales Tax** in the unit Bid prices or in any other Contract amount. However, the Contracting Agency will not provide additional compensation to the Prime Contractor or Subcontractor for **Retail Sales Taxes** paid by the Contractor in addition to the **Retail Sales Tax** on the total contract amount. Typically, these taxes are collected on items such as the purchase or rental of; tools, machinery, equipment,

INFORMATIONAL COPY ONLY, NOT FOR BIDDING PURPOSES

or consumable supplies not integrated into the project. Such sales taxes shall be included in the unit Bid prices or in any other Contract amounts.

The Summary of Quantities in the Contract Plans identifies those parts of the project that are subject to **Retail Sales Tax** under Section 1-07.2(2).

1-07.2(3) Services

This section is revised to read:

Any contract wholly for professional or other applicable services is generally not subject to **Retail Sales Tax** and therefore the Contractor shall not collect **Retail Sales Tax** from the Contracting Agency on those Contracts. Any incidental taxes paid as part of providing the services shall be included in the payments under the contract.

Section 1-08, Prosecution and Progress
May 5, 2014

1-08.1 Subcontracting

The eighth paragraph is revised to read:

On all projects, the Contractor shall certify to the actual amounts paid to Disadvantaged, Minority, Women's, or Small Business Enterprise firms that were used as Subcontractors, lower tier subcontractors, manufacturers, regular dealers, or service providers on the Contract. This Certification shall be submitted to the Project Engineer on a monthly basis each month between Execution of the Contract and Physical Completion of the contract using the application available at: https://remoteapps.wsdot.wa.gov/mapsdata/tools/dbeparticipation. The monthly report is due 20 calendar days following the end of the month. A monthly report shall be submitted for every month between Execution of the Contract and Physical Completion regardless of whether payments were made or work occurred.

The ninth paragraph is deleted.

Section 1-09, Measurement and Payment
January 5, 2015

1-09.6 Force Account

In the third paragraph of item number 3, the last sentence is revised to read:

In the event that prior quotations are not obtained and the vendor is not a firm independent from the Contractor or Subcontractor, then after-the-fact quotations may be obtained by the Engineer from the open market in the vicinity and the lowest such quotation may be used in place of submitted invoice.

Section 1-10, Temporary Traffic Control
August 4, 2014

1-10.1(1) Materials

The following material reference is deleted from this section:

INFORMATIONAL COPY ONLY, NOT FOR BIDDING PURPOSES

Barrier Drums 9-35.8

1-10.1(2) Description

The first paragraph is revised to read:

> The Contractor shall provide flaggers, and all other personnel required for labor for traffic control activities and not otherwise specified as being furnished by the Contracting Agency.

1-10.2(1) General

In the third paragraph, the first two sentences are revised to read:

> The primary and alternate TCS shall be certified by one of the organizations listed in the Special Provisions. Possession of a current Washington State TCS card and flagging card by the primary and alternate TCS is mandatory.

1-10.2(1)B Traffic Control Supervisor

The first paragraph is revised to read:

> A Traffic Control Supervisor (TCS) shall be present on the project whenever flagging or other traffic control labor is being utilized or less frequently, as authorized by the Engineer.

The last paragraph is revised to read:

> The TCS may perform the Work described in Section 1-10.3(1)A Flaggers or in Section 1-10.3(1)B Other Traffic Control Labor and be compensated under those Bid items, provided that the duties of the TCS are accomplished.

1-10.2(2) Traffic Control Plans

The first paragraph is revised to read:

> The traffic control plan or plans appearing in the Contract documents show a method of handling vehicle, bicycle, and pedestrian traffic. All construction signs, flaggers, and other traffic control devices are shown on the traffic control plan(s) except for emergency situations. If the Contractor proposes adding the use of flaggers to a plan, this will constitute a modification requiring approval by the Engineer. The modified plans shall show locations for all the required advance warning signs and a safe, protected location for the flagging station. If flagging is to be performed during hours of darkness, the plan shall include appropriate illumination for the flagging station.

In the second paragraph, the second sentence is revised to read:

> Any Contractor-proposed modification, supplement or replacement shall show the necessary construction signs, flaggers, and other traffic control devices required to support the Work.

1-10.2(3) Conformance to Established Standards

In the second paragraph, the second sentence is revised to read:

> The National Cooperative Highway Research Project (NCHRP) Report 350 and the AASHTO Manual for Assessing Safety Hardware (MASH) have established requirements for crash testing.

In the third paragraph, "NCHRP 350" is revised to read "NCHRP 350 or MASH".

INFORMATIONAL COPY ONLY, NOT FOR BIDDING PURPOSES

In the fourth paragraph, "NCHRP 350" is revised to read "NCHRP 350 or MASH".

In the fifth paragraph, "NCHRP 350" is revised to read "NCHRP 350 or MASH".

1-10.3(1) Traffic Control Labor

The first paragraph is revised to read:

> The Contractor shall furnish all personnel for flagging, for the execution of all procedures related to temporary traffic control and for the setup, maintenance and removal of all temporary traffic control devices and construction signs necessary to control vehicular, bicycle, and pedestrian traffic during construction operations.

1-10.3(1)A Flaggers and Spotters

This section's title is revised to read:

> **Flaggers**

The first paragraph is revised to read:

> Flaggers shall be posted where shown on approved Traffic Control Plans or where directed by the Engineer. All flaggers shall possess a current flagging card issued by the State of Washington, Oregon, Montana, or Idaho. The flagging card shall be immediately available and shown to the Contracting Agency upon request.

The last paragraph is deleted.

1-10.3(1)B Other Traffic Control Labor

This section is revised to read:

> In addition to flagging duties, the Contractor shall provide personnel for all other traffic control procedures required by the construction operations and for the labor to install, maintain and remove any traffic control devices shown on Traffic Control Plans.

1-10.3(3)B Sequential Arrow Signs

This section is supplemented with the following:

> A sequential arrow sign is required for all lane closure tapers on a multilane facility. A separate sequential arrow sign shall be used for each closed lane. The arrow sign shall not be used to laterally shift traffic. When used in the caution mode, the four corner mode shall be used.

1-10.3(3)C Portable Changeable Message Signs

This section is revised to read:

> Where shown on an approved traffic control plan or where ordered by the Engineer, the Contractor shall provide, operate, and maintain portable changeable message signs (PCMS). A PCMS shall be placed behind a barrier or guardrail whenever possible, but shall at a minimum provide 4 ft. of lateral clearance to edge of travelled lane and be delineated by channelization devices. The Contractor shall remove the PCMS from the clear zone when not in use unless protected by barrier or guardrail.

INFORMATIONAL COPY ONLY, NOT FOR BIDDING PURPOSES

1-10.3(3)F Barrier Drums

This section including title is deleted in its entirety and replaced with the following:

1-10.3(3)F Vacant

1-10.3(3)K Portable Temporary Traffic Control Signal

The fifth paragraph is revised to read:

The Project Engineer or designee will inspect the signal system at initial installation/operation and approve the signal timing. Final approval will be based on the results of the operational inspection.

1-10.4(2) Item Bids With Lump Sum for Incidentals

In the second paragraph, the first and second sentences are revised to read:

"Flaggers" will be measured by the hour. Hours will be measured for each flagging station, shown on an approved Traffic Control Plan, when that station is staffed in accordance with Section 1-10.3(1)A.

The first sentence of the last bulleted item in this section is revised to read:

Installing and removing Barricades, Traffic Safety Drums, Cones, Tubular Markers and Warning Lights and Flashers to carry out approved Traffic Control Plan(s).

1-10.5(2) Item Bids With Lump Sum for Incidentals

This section is deleted and replaced with the following:

"Traffic Control Supervisor", lump sum.

The lump sum Contract payment shall be full compensation for all costs incurred by the Contractor in performing the Work defined in Section 1-10.2(1)B.

"Pedestrian Traffic Control", lump sum.

The lump sum Contract payment shall be full compensation for all costs incurred by the Contractor in performing the Work for pedestrian traffic control defined in Section 1-10.

"Flaggers", per hour.

The unit Contract price, when applied to the number of units measured for this item in accordance with Section 1-10.4(2), shall be full compensation for all costs incurred by the Contractor in performing the Work defined in Section 1-10.3(1)A.

"Other Traffic Control Labor", per hour.

The unit Contract price, when applied to the number of units measured for this item in accordance with Section 1-10.4(2), shall be full compensation for all labor costs incurred by the Contractor in performing the Work specified for this item in Section 1-10.4(2).

"Construction Signs Class A", per square foot.

The unit Contract price, when applied to the number of units measured for this item in accordance with Section 1-10.4(2), shall be full compensation for all costs incurred by the Contractor in performing the Work described in Section 1-10.3(3)A. In the event that "Do

INFORMATIONAL COPY ONLY, NOT FOR BIDDING PURPOSES

Not Pass" and "Pass With Care" signs must be left in place, a change order, as described in Section 1-04.4, will be required. When the Bid Proposal contains the item "Sign Covering", then covering those signs indicated in the Contract will be measured and paid according to Section 8-21.

"Sequential Arrow Sign", per hour.

The unit Contract price, when applied to the number of units measured for this item in accordance with Section 1-10.4(2), shall be full compensation for all costs incurred by the Contractor in performing the Work described in Section 1-10.3(3)B.

"Portable Changeable Message Sign", per hour.

The unit Contract price, when applied to the number of units measured for this item in accordance with Section 1-10.4(2), shall be full compensation for all costs incurred by the Contractor in performing the Work for procuring all portable changeable message signs required for the project and for transporting these signs to and from the project.

"Transportable Attenuator", per each.

The unit Contract price, when applied to the number of units measured for this item in accordance with Section 1-10.4(2), shall be full compensation for all costs incurred by the Contractor in performing the Work described in Section 1-10.3(3)J except for costs compensated separately under the items "Operation of Transportable Attenuator" and "Repair Transportable Attenuator".

"Operation of Transportable Attenuator", per hour.

The unit Contract price, when applied to the number of units measured for this item in accordance with Section 1-10.4(2), shall be full compensation for all costs incurred by the Contractor in performing the Work for operating transportable attenuators on the project.

"Repair Transportable Attenuator", by force account.

All costs of repairing or replacing transportable attenuators that are damaged by the motoring public while in use as shown on an approved Traffic Control Plan will be paid for by force account as specified in Section 1-09.6. To provide a common Proposal for all Bidders, the Contracting Agency has estimated the amount of force account for "Repair Transportable Attenuator" and has entered the amount in the Proposal to become a part of the total Bid by the Contractor. Transportable attenuators damaged due to the Contractor's operation or damaged in any manner when not in use shall be repaired or replaced by the Contractor at no expense to the Contracting Agency.

"Other Temporary Traffic Control", lump sum.

The lump sum Contract payment shall be full compensation for all costs incurred by the Contractor in performing the Work defined in Section 1-10, and which costs are not compensated by one of the above-listed items.

"Portable Temporary Traffic Control Signal", lump sum.

The lump sum Contract payment shall be full compensation for all costs incurred by the Contractor in performing the Work as described in Section 1-10.3(3)K, including all costs for

INFORMATIONAL COPY ONLY, NOT FOR BIDDING PURPOSES

traffic control during manual control, adjustment, malfunction, or failure of the portable traffic control signals and during replacement of failed or malfunctioning signals.

Section 2-01, Clearing, Grubbing, and Roadside Cleanup
August 4, 2014

2-01.3(1) Clearing
In the second paragraph, item number 3 (up until the colon) is revised to read:

3. Follow these requirements for all stumps that will be buried deeper than 5 feet from the top, side, or end surface of the embankment or any structure and are in a location that will not be terraced as described in Section 2-03.3(14):

Section 2-02, Removal of Structures and Obstructions
January 5, 2015

2-02.3(2) Removal of Bridges, Box Culverts, and Other Drainage Structures
This section is supplemented with the following new subsections:

2-02.3(2)A Bridge Removal
2-02.3(2)A1 Bridge Demolition Plan Submittal
The Contractor shall submit a Type 2E Working Drawing consisting of a bridge demolition plan, showing the method of removing the existing bridge(s), or portions of bridges, as specified.

The bridge demolition plan shall show all equipment, sequence of operations, and details required to complete the work, including containment, collection, and disposal of all debris. The plan shall include a crane foundation stability analysis and crane load calculations for the work. The plan shall detail the containment, collection, and disposal of all debris. The plan shall show all stages of demolition.

When the bridge removal work includes removal of a truss, and when the Contractor's removal method involves use of a crane or cranes to pick, lift, and remove the truss, the Contractor shall confirm the truss dead load weight prior to beginning the truss removal operation. The operation of confirming the truss dead load shall be performed at both ends of the truss, and shall ensure that the truss is broken free of its support bearings. The Contractor's method of confirming the truss dead load, whether by hydraulic jacks or other means, shall be included in the Contractor's bridge demolition plan submittal.

When the bridge removal work involves removing portions of existing concrete without replacement, the methods and tools used to achieve the smooth surface and profile specified in Section 2-02.3(2)A2 shall be included in the Contractor's bridge demolition plan submittal.

2-02.3(2)A2 Removing Portions of Existing Concrete
Care shall be taken in removing concrete to prevent overbreakage or damage to portions of the existing Structure which are to remain. Before concrete removal begins, a saw cut shall be made into the surface of the concrete at the perimeter of the removal limits. The saw cut shall be 3/4-inch deep when the steel reinforcement is to remain, and may be deeper when the steel reinforcement is removed with the concrete.

INFORMATIONAL COPY ONLY, NOT FOR BIDDING PURPOSES

Concrete shall be completely removed (exposing the deformed surface of the bar) from existing steel reinforcing bars which extend from the existing members and are specified to remain. Steel reinforcing bars that are not designated to remain shall be cut a minimum of 1-inch behind the final surface. The void left by removal of the steel reinforcing bar shall be filled with mortar conforming to Section 9-20.4(2). The mortar shall match the color of the existing concrete surface as nearly as practicable.

The Contractor shall roughen, clean, and saturate existing concrete surfaces, against which fresh concrete will be placed, in accordance with Section 6-02.3(12)B. When a portion of existing concrete is to be removed without replacement, concrete shall be removed to a clean line with a smooth surface of less than 1/16 inch profile.

2-02.3(2)A3 Use of Explosives for Bridge Demolition
Explosives shall not be used for bridge demolition, except as specifically allowed by the Special Provisions.

2-02.5 Payment

This section is supplemented with the following new Bid items:

"Removing Existing Bridge___", lump sum.

"Removing Existing Structure___", lump sum.

"Removing Portion of Existing Bridge___", lump sum.

"Removing Portion of Existing Structure___", lump sum.

Section 2-03, Roadway Excavation and Embankment
August 4, 2014

2-03.3(14) Embankment Construction

The third paragraph is revised to read:

Hillside Terraces – The Contractor shall terrace the original ground or embankment when the slope of the surface is 2H:1V or steeper unless otherwise directed by the Engineer. The face of each terrace shall be a minimum of 1 foot and a maximum of 5 feet in height and shall be vertical or near vertical as required to remain stable during material placement and compaction. The bench of the terrace shall slope outward to drain and shall not be inclined steeper than 0.05 foot per foot. Terraces damaged during work shall be reestablished. The Engineer may order the Contractor to place gravel backfill, pipe drains or both to drain any seepage.

2-03.3(14)L Embankment Widening for Guardrail

The first sentence is revised to read:

Embankments widened for the installation of beam guardrail shall be terraced in accordance with the requirements for hillside terraces in Section 2-03.3(14).

The second sentence is deleted.

INFORMATIONAL COPY ONLY, NOT FOR BIDDING PURPOSES

Section 2-09, Structure Excavation
January 5, 2015

2-09.4 Measurement
The seventh paragraph is revised to read:

For pipelines the lower limit in measuring structure excavation will be the foundation level as shown in the Plans or as directed by the Engineer.

Section 2-12, Construction Geosynthetic
January 5, 2015

2-12.3(4) Permanent Erosion Control and Ditch Lining
In the fourth paragraph, "Section 9-13.2" is revised to read "Section 9-13.1(4)".

Section 3-04, Acceptance of Aggregate
August 4, 2014

3-04.5 Payment
In Table 2, the row containing the item "HMA Aggregate" is revised to read:

9-03.8(2)	HMA Aggregate					15	15	Uncompacted Void Content 15

Section 5-01, Cement Concrete Pavement Rehabilitation
August 4, 2014

5-01.2 Materials
The referenced section for the following item is revised to read:

Dowel Bars 9-07.5

5-01.3(4) Replace Portland Cement Concrete Panel
In the third paragraph, the last sentence is deleted.

The seventeenth paragraph (beginning with "The Contractor shall place a bond-breaking material…") is deleted.

Section 5-02, Bituminous Surface Treatment
August 4, 2014

5-02.3(11) Temporary Raised Pavement Markings
This section's title is revised to read:

Temporary Pavement Markings

The word "raised" is deleted from this section.

INFORMATIONAL COPY ONLY, NOT FOR BIDDING PURPOSES

Section 5-04, Hot Mix Asphalt
January 5, 2015

5-04.3(3)A Material Transfer Device/Vehicle

The first paragraph is supplemented with the following new sentence:

> At the Contractor's request the Engineer may approve paving without an MTD/V; the Engineer will determine if an equitable adjustment in cost or time is due.

In the last sentence of the second paragraph, "Project Engineer" is revised to read "Engineer".

5-04.3(5)A Preparation of Existing Surfaces

The first sentence of the last paragraph is revised to read:

> Unless otherwise approved by the Engineer, the tack coat shall be CSS-1 or CSS-1h emulsified asphalt.

5-04.3(7)A3 Commercial Evaluation

The second sentence in the first paragraph is revised to read:

> Mix designs for HMA accepted by commercial evaluation shall be submitted to the Project Engineer on WSDOT Form 350-042.

5-04.3(8)A4 Definition of Sampling and Sublot

In the second sentence of the second paragraph, "800 tons" is revised to read "1,000 tons".

5-04.3(10)A General

In the first paragraph, "checking" and "cracking" are deleted.

In the third paragraph, the following new sentence is inserted after the second sentence:

> Coverage with a steel wheel roller may precede pneumatic tired rolling.

In the third paragraph, the following new sentence is inserted before the last sentence:

> Regardless of mix temperature, a roller shall not be operated in a mode that results in checking or cracking of the mat.

5-04.3(10)B1 General

In this section, "Project Engineer" is revised to read "Engineer".

The first paragraph is revised to read:

> HMA mixture accepted by statistical or nonstatistical evaluation that is used in traffic lanes, including lanes for ramps, truck climbing, weaving, and speed change, and having a specified compacted course thickness greater than 0.10-foot, shall be compacted to a specified level of relative density. The specified level of relative density shall be a Composite Pay Factor (CPF) of not less than 0.75 when evaluated in accordance with Section 1-06.2, using a minimum of 91 percent of the maximum density. The percent of maximum density shall be determined by WSDOT FOP for AASHTO T 729 when using the nuclear density gauge and WSDOT SOP 736 when using cores to determine density. The

INFORMATIONAL COPY ONLY, NOT FOR BIDDING PURPOSES

specified level of density attained will be determined by the statistical evaluation of the density of the pavement.

The following four new paragraphs are inserted after the first paragraph:

Tests for the determination of the pavement density will be taken in accordance the required procedures for measurement by a nuclear density gauge or roadway cores after completion of the finish rolling.

If the Contracting Agency uses a nuclear density gauge to determine density the test procedures FOP for WAQTC TM 8 and WSDOT SOP T 729 will be used on the day the mix is placed.

Roadway cores for density may be obtained by either the Contracting Agency or the Contractor in accordance with WSDOT SOP 734. The core diameter shall be 4-inches unless other approved by the Engineer. Roadway cores will be tested by the Contracting Agency in accordance with WSDOT FOP for AASHTO T 166.

If the Contract includes the Bid item "Roadway Core" the cores shall be obtained by the Contractor in the presence of the Engineer on the same day the mix is placed and at locations designated by the Engineer. If the Contract does not include the Bid item "Roadway Core" the Contracting Agency will obtain the cores.

In the sixth paragraph (after the preceding Amendments are applied), the second sentence is revised to read:

Sublots will be uniform in size with a maximum of approximately 100 tons per sublot; the final sublot of the day may be increased to 150 tons.

5-04.3(10)B4 Test Results

The first paragraph is revised to read:

The results of all compaction acceptance testing and the CPF of the lot after three sublots have been tested will be available to the Contractor through WSDOT's website. Determination of the relative density of the HMA with a nuclear density gauge requires a correlation factor and may require resolution after the correlation factor is known. Acceptance of HMA compaction will be based on the statistical evaluation and CPF so determined.

In the second paragraph, the first sentence is revised to read:

For a sublot that has been tested with a nuclear density gauge that did not meet the minimum of 91 percent of the reference maximum density in a compaction lot with a CPF below 1.00 and thus subject to a price reduction or rejection, the Contractor may request that a core be used for determination of the relative density of the sublot.

In the second sentence of the second paragraph, "moisture-density" is revised to read "density".

In the second paragraph, the fourth sentence is deleted.

5-04.3(20) Anti-Stripping Additive

This section is revised to read:

INFORMATIONAL COPY ONLY, NOT FOR BIDDING PURPOSES

Anti-stripping additive shall be added to the liquid asphalt by the asphalt supplier prior to shipment to the hot mix asphalt mixing plant in the amount designated in the WSDOT mix design evaluation report provided by the Contracting Agency. Paving shall not begin before the anti-strip requirements have been provided to the Contractor. Anti-strip is not required for temporary work that will be removed prior to Completion.

5-04.4 Measurement

The following new paragraph is inserted after the first paragraph:

Roadway cores will be measured per each for the number of cores taken.

The second to last paragraph is deleted.

5-04.5 Payment

The bid item "Removing Temporary Pavement Marking", per linear foot and paragraph following bid item are deleted.

The following new bid item is inserted before the second to last paragraph:

"Roadway Core", per each.

The Contractor's costs for all other Work associated with the coring (e.g., traffic control) shall be incidental and included within the unit Bid price per each and no additional payments will be made.

Section 6-01, General Requirements for Structures
January 5, 2015

6-01.6 Load Restrictions on Bridges Under Construction

The first sentence of the second paragraph is revised to read:

If necessary and safe to do so, and if the Contractor requests it through a Type 2E Working Drawing, the Engineer may allow traffic on a bridge prior to completion.

In the second paragraph, item number 3 (up until the colon) is revised to read:

3. Provide stress calculations under the design criteria specified in the AASHTO LRFD Bridge Design Specifications, current edition, including at a minimum the following:

6-01.9 Working Drawings

This section is revised to read:

All Working Drawings required for bridges and other Structures shall conform to Section 1-05.3.

6-01.10 Utilities Supported by or Attached to Bridges

In the second paragraph, "bridge structures" is revised to read "bridges".

6-01.14 Premolded Joint Filler

In the second paragraph, the first sentence is revised to read:

The Contractor may substitute for the nails any adhesive acceptable to the Engineer.

INFORMATIONAL COPY ONLY, NOT FOR BIDDING PURPOSES

Section 6-02, Concrete Structures
January 5, 2015

6-02.3(1) Classification of Structural Concrete

In paragraph two, item number 1 is revised to read:

Mix design and proportioning specified in Sections 6-02.3(2), 6-02.3(2)A and 6-02.3(2)A1.

Item number 3 is renumbered to 4.

After the preceding Amendments are applied, the following new numbered item is inserted after item number 2:

3. Temperature and time for placement requirements specified in Section 6-02.3(4)D.

6-02.3(2) Proportioning Materials

In the third paragraph, the first sentence is revised to read:

The use of fly ash is required for Class 4000P concrete, except that ground granulated blast furnace slag may be substituted for fly ash at a 1:1 ratio.

In the table titled "Cementitious Requirement for Concrete", the row beginning with "4000D" is deleted.

The fourth paragraph is revised to read:

When both ground granulated blast furnace slag and fly ash are included in the concrete mix, the total weight of both these materials is limited to 40 percent by weight of the total cementitious material for concrete class 4000A, and 50 percent by weight of the total cementitious material for all other classes of concrete.

6-02.3(2)A Contractor Mix Design

The first paragraph is revised to read:

The Contractor shall provide a mix design in writing to the Engineer for all classes of concrete specified in the Plans except for lean concrete and commercial concrete. No concrete shall be placed until the Engineer has reviewed the mix design. The required average 28-day compressive strength shall be selected in accordance with ACI 318, Chapter 5, Section 5.3.2. ACI 211.1 and ACI 318 shall be used to determine proportions. All proposed concrete mixes except Class 4000D shall meet the requirements in Cementitious Requirement for Concrete in Section 6-02.3(2).

In the fourth paragraph, the fourth sentence is deleted.

In the sixth paragraph, the first sentence is deleted.

In the seventh paragraph, the last sentence is deleted.

The eighth paragraph is revised to read:

INFORMATIONAL COPY ONLY, NOT FOR BIDDING PURPOSES

Air content for concrete Class 4000D shall conform to Section 6-02.3(2)A1. For all other concrete, air content shall be a minimum of 4.5 percent and a maximum of 7.5 percent for all concrete placed above the finished ground line.

The following new sub-section is added:

6-02.3(2)A1 Contractor Mix Design for Concrete Class 4000D

All Class 4000D concrete shall be a project specific performance mix design conforming to the following requirements:

1. Aggregate shall use combined gradation in accordance with Section 9-03.1(5) with a nominal maximum aggregate size of 1-1/2 inches.

2. Permeability shall be less than 2,000 coulombs at 56 days in accordance with AASHTO T 277.

3. Freeze-thaw durability shall be provided by one of the following methods:
   a. The concrete shall maintain an air content between 4.5 and 7.5 percent.
   b. The concrete shall maintain a minimum air content that achieves a durability factor of 90 percent, minimum, after 300 cycles in accordance with AASHTO T 161, Procedure A. This air content shall not be less than 3.0 percent. Test samples shall be obtained from concrete batches of a minimum of 3.0 cubic yards.

4. Scaling shall have a visual rating less than or equal to 2 after 50 cycles in accordance with ASTM C 672.

5. Shrinkage at 28 days shall be less than 320 micro strain in accordance with AASHTO T 160.

6. Modulus of elasticity shall be measured in accordance with ASTM C 469.

7. Density shall be measured in accordance with ASTM C 138.

The Contractor shall submit the mix design in accordance with Section 6-02.3(2)A. The submittal shall include test reports for all tests listed above that follow the reporting requirements of the AASHTO/ASTM procedures. Samples for testing may be obtained from either laboratory or concrete plant batches. If concrete plant batches are used, the minimum batch size shall be 3.0 cubic yards. The Contractor shall submit the mix design to the Engineer at least 30 calendar days prior to the placement of concrete in the bridge deck.

6-02.3(4)D Temperature and Time For Placement

The first two sentences are revised to read:

Concrete temperatures shall remain between 55°F and 90°F while it is being placed, except that Class 4000D concrete temperatures shall remain between 55°F and 75°F during placement. Precast concrete that is heat cured in accordance with Section 6-02.3(25)D shall remain between 50°F and 90°F while being placed.

6-02.3(5)A General

The first paragraph is revised to read:

INFORMATIONAL COPY ONLY, NOT FOR BIDDING PURPOSES

Concrete for the following applications will be accepted based on a Certificate of Compliance to be provided by the supplier as described in Section 6-02.3(5)B:

1. Lean concrete.

2. Commercial concrete.

3. Class 4000P concrete for Roadside Steel Sign Support Foundations.

4. Class 4000P concrete for Type II, III, and CCTV Signal Standard Foundations that are 12'-0" or less in depth.

5. Class 4000P concrete for Type IV and V Strain Pole Foundations that are 12'-0" or less in depth.

6. Class 4000P concrete for Steel Light Standard Foundations Types A & B.

The following new sentence is inserted at the beginning of the second paragraph:

Slip-form barrier concrete will be accepted based on conformance to the requirements for temperature, air content and compressive strength at 28 days for sublots as tested and determined by the Contracting Agency.

6-02.3(5)G Sampling and Testing Frequency for Temperature, Consistency, and Air Content

In the fifth sentence of the second paragraph, "five truck loads" is revised to read "ten truck loads".

The second paragraph is supplemented with the following:

If the remaining quantity to be placed is less than ten truck loads; then a sample shall be randomly taken from one of the remaining truck loads.

In the last sentence of the third paragraph, "five truck loads" is revised to read "ten truck loads".

6-02.3(5)H Sampling and Testing for Compressive Strength and Initial Curing

The second paragraph is revised to read:

The Contractor shall provide and maintain a sufficient number of cure boxes in accordance with WSDOT FOP for AASHTO T 23 for curing concrete cylinders. The cure boxes shall be readily accessible and no more than 500 feet from the point of acceptance testing, unless otherwise approved by the Engineer. The Contractor shall also provide, maintain and operate all necessary power sources and connections needed to operate the cure boxes. The cure boxes shall be in-place and functioning at the specified temperature for curing cylinders prior to concrete placement. Concrete cylinders shall be cured in the cure boxes in accordance with WSDOT FOP for AASHTO T 23. The cure boxes shall have working locks and the Contractor shall provide the Engineer with one key to each of the locks. Once concrete cylinders are placed in the cure box, the cure box shall not be disturbed until the cylinders have been removed. The Contractor shall retain the cure box Temperature Measuring Device log and provide it to the Engineer upon request.

The following new paragraph is inserted after the last paragraph:

INFORMATIONAL COPY ONLY, NOT FOR BIDDING PURPOSES

All cure box costs shall be incidental to the associated item of work.

6-02.3(6)A2 Cold Weather Protection

The first sentence in the first paragraph is revised to read:

This Specification applies when the weather forecast on the day of concrete placement predicts air temperatures below 35°F at any time during the 7 days following placement.

The first sentence of the second paragraph is revised to read:

The temperature of the concrete shall be maintained above 50°F during the entire curing period or 7 days, whichever is greater.

6-02.3(10)A Preconstruction Meeting

This section including title is revised to read:

6-02.3(10)A Pre-Deck Pour Meeting

A pre-deck pour meeting shall be held 5 to 10 working days before placing deck concrete to discuss construction procedures, personnel, equipment to be used, concrete sampling and testing and deck finishing and curing operations. Those attending shall include, at a minimum, the superintendent, foremen in charge of placing and finishing concrete, and representatives from the concrete supplier and the concrete pump truck supplier.

If the project includes more than one bridge deck, and if the Contractor's key personnel change between concreting operations, or at request of the Engineer, additional conferences shall be held before each deck placement.

6-02.3(10)D Concrete Placement, Finishing, and Texturing

This section is supplemented with the following new sub-sections:

6-02.3(10)D1 Test Slab Using Bridge Deck Concrete

After the Contractor receives the Engineer's approval for the Class 4000D concrete mix design, and a minimum of seven calendar days prior to the first placement of bridge deck concrete, the Contractor shall construct a test slab using concrete of the approved mix design.

The test slab may be constructed on grade, shall have a minimum thickness of eight-inches, shall have minimum plan dimensions of 10-feet along all four edges, and shall be square or rectangular.

During construction of the test slab, the Contractor shall demonstrate concrete sampling and testing, use of the concrete temperature monitoring system, the concrete fogging system, concrete placement system, and the concrete finishing operation. The Contractor shall conduct the demonstration using the same type of equipment to be used for the production bridge decks, except that the Contractor may elect to finish the test slab with a hand-operated strike-board.

After the construction of the test slab and the demonstration of bridge deck construction operations is complete, the Contractor shall remove and dispose of the test slab in accordance with Sections 2-02.3 and 2-03.3(7)C.

6-02.3(10)D2 Preparation for Concrete Placement

INFORMATIONAL COPY ONLY - NOT FOR BIDDING PURPOSES

Before placing bridge approach slab concrete, the subgrade shall be constructed in accordance with Sections 2-06 and 5-05.3(6).

Before any concrete is placed, the finishing machine shall be operated over the entire length of the deck/slab to check screed deflection. Concrete placement may begin only if the Engineer approves after this test.

Immediately before placing concrete, the Contractor shall check (and adjust if necessary) all falsework and wedges to minimize settlement and deflection from the added mass of the concrete deck/slab. The Contractor shall also install devices, such as telltales, by which the Engineer can readily measure settlement and deflection.

6-02.3(10)D3 Concrete Placement

The placement operation shall cover the full width of the bridge deck or the full width between construction joints. The Contractor shall locate any construction joint over a beam or web that can support the deck/slab on either side of the joint. The joint shall not occur over a pier unless the Plans permit. Each joint shall be formed vertically and in true alignment. The Contractor shall not release falsework or wedges supporting bridge deck placement sections on either side of a joint until each side has aged as these Specifications require.

Placement of concrete for bridge decks and bridge approach slabs shall comply with Section 6-02.3(6). In placing the concrete, the Contractor shall:

1. Place it (without segregation) against concrete placed earlier, as near as possible to its final position, approximately to grade, and in shallow, closely spaced piles;

2. Consolidate it around reinforcing steel by using vibrators before strike-off by the finishing machine;

3. Not use vibrators to move concrete;

4. Not revibrate any concrete surface areas where workers have stopped prior to screeding;

5. Remove any concrete splashed onto reinforcing steel in adjacent segments before concreting them;

6. Maintain a slight excess of concrete in front of the screed across the entire width of the placement operation;

7. Operate the finishing machine to create a surface that is true and ready for final finish without overfinishing or bringing excessive amounts of mortar to the surface; and

8. Leave a thin, even film of mortar on the concrete surface after the last pass of the finishing machine pan.

Workers shall complete all post screeding operations without walking on the concrete. This may require work bridges spanning the full width of the deck/slab.

After removing the screed supports, the Contractor shall fill the voids with concrete (not mortar).

INFORMATIONAL COPY ONLY, NOT FOR BIDDING PURPOSES

If the surface left by the finishing machine is porous, rough, or has minor irregularities, the Contractor shall float the surface of the concrete. Floating shall leave a smooth and even surface. Float finishing shall be kept to the minimum number of passes necessary to seal the surface. The floats shall be at least 4-feet long. Each transverse pass of the float shall overlap the previous pass by at least half the length of the float. The first floating shall be at right angles to the strike-off. The second floating shall be at right angles to the centerline of the span. A smooth riding surface shall be maintained across construction joints.

The edge of completed roadway slabs at expansion joints and compression seals shall have a 3/8-inch radius.

After floating, but while the concrete remains plastic, the Contractor shall test the entire deck/slab for flatness (allowing for crown, camber, and vertical curvature). The testing shall be done with a 10-foot straightedge held on the surface. The straightedge shall be advanced in successive positions parallel to the centerline, moving not more than one half the length of the straightedge each time it advances. This procedure shall be repeated with the straightedge held perpendicular to the centerline. An acceptable surface shall be one free from deviations of more than 1/8-inch under the 10-foot straightedge.

If the test reveals depressions, the Contractor shall fill them with freshly mixed concrete, strike off, consolidate, and refinish them. High areas shall be cut down and refinished. Retesting and refinishing shall continue until a surface conforming to the requirements specified above is produced.

6-02.3(10)D4 Monitoring Bridge Deck Concrete Temperature After Placement

The Contractor shall monitor and record the concrete temperature and ambient temperature hourly for seven calendar days after placement. The Contractor shall monitor and record concrete temperature by placing two maturity meter temperature monitoring devices in the bridge deck at locations specified by the Engineer. The Contractor shall monitor ambient temperature using maturity meters near the locations where concrete temperature is being monitored. When the bridge deck is being enclosed and heated to meet cold weather requirements, ambient temperature readings shall be taken within the enclosure. The Contractor shall submit the concrete temperature and ambient temperature data to the Engineer in spreadsheet format within 14 calendar days from placing the bridge deck concrete.

The Contractor shall submit the type and model of maturity meter temperature monitoring device, and the associated devices responsible for recording and documenting the temperature and curing time, to the Engineer at least 14 calendar days prior to the pre-concreting conference for the first bridge deck to be cast. The placement and operation of the temperature monitoring devices and associated devices will be an agenda item at the pre-concreting conference for the first bridge deck to be cast.

6-02.3(10)D5 Bridge Deck Concrete Finishing and Texturing

Except as otherwise specified for portions of bridge decks receiving an overlay or sidewalk under the same Contract, the Contractor shall texture the surface of the bridge deck as follows:

The Contractor shall texture the bridge deck using diamond tipped saw blades mounted on a power driven, self-propelled machine that is designed to texture concrete surfaces. The grooving equipment shall provide grooves that are 1/8" ± 1/64" wide, 3/16" ± 1/16" deep, and spaced at 3/4" ± 1/8". The bridge deck shall not be textured with a metal tined comb.

INFORMATIONAL COPY ONLY NOT FOR BIDDING PURPOSES

The Contractor shall submit the type of grooving equipment to be used to the Engineer for approval 30 calendar days prior to performing the work. The Contractor shall demonstrate that the method and equipment for texturing the bridge deck will not chip, spall or otherwise damage the deck. The Contractor shall not begin texturing the bridge deck until receiving the Engineer's approval of the Contractor's method and equipment.

Unless otherwise approved by the Engineer, the Contractor shall texture the concrete bridge deck surface either in a longitudinal direction, parallel with centerline or in a transverse direction, perpendicular with centerline. The Contractor shall texture the bridge deck surface to within 3-inches minimum and 15-inches maximum of the edge of concrete at expansion joints, within 1-foot minimum and 2-feet maximum of the curb line, and within 3-inches minimum and 9-inches maximum of the perimeter of bridge drain assemblies.

The Contractor shall contain and collect all concrete dust and debris generated by the bridge deck texturing process, and shall dispose of the collected concrete dust and debris in accordance with Section 2-03.3(7)C.

If the Plans call for placement of a sidewalk or an HMA or concrete overlay on the bridge deck, the Contractor shall produce the final finish of these areas by dragging a strip of damp, seamless burlap lengthwise over the bridge deck or by brooming it lightly. Approximately 3-feet of the drag shall contact the surface, with the least possible bow in its leading edge. It shall be kept wet and free of hardened lumps of concrete. When the burlap drag fails to produce the required finish, the Contractor shall replace it. When not in use, it shall be lifted clear of the bridge deck.

After the bridge deck has cured, the surface shall conform to the surface smoothness requirements specified in Section 6-02.3(10)D3.

The surface texture on any area repaired to address out-of-tolerance surface smoothness shall match closely that of the surrounding bridge deck area at the completion of the repair. Methods used to remove high spots shall cut through the mortar and aggregate without breaking or dislodging the aggregate or causing spalls.

6-02.3(10)D6 Bridge Approach Slab Finishing and Texturing

Bridge approach slabs shall be textured either in accordance with Section 6-02.3(10)D5, or using metal tined combs in the transverse direction, except bridge approach slabs receiving an overlay in the same Contract shall be finished as specified in Section 6-02.3(10)D5 only.

The comb shall be made of a single row of metal tines. It shall leave striations in the fresh concrete approximately 3/16-inch deep by 1/8-inch wide and spaced approximately 1/2-inch apart. The Engineer will decide actual depths at the site. If the comb has not been approved, the Contractor shall obtain the Engineer's approval by demonstrating it on a test section. The Contractor may operate the combs manually or mechanically, either singly or with several placed end to end. The timing and method used shall produce the required texture without displacing larger particles of aggregate.

Texturing shall end 2-feet from curb lines. This 2-foot untextured strip shall be hand finished with a steel trowel.

Surface smoothness, high spots, and low spots shall be addressed as specified in Section 6-02.3(10)D5. The surface texture on any area cut down or built up shall match closely that

INFORMATIONAL COPY ONLY - NOT FOR BIDDING PURPOSES

of the surrounding bridge approach slab area. The entire bridge approach slab shall provide a smooth riding surface.

6-02.3(11) Curing Concrete

Items number 1 through 4 are deleted and replaced with the following 5 new numbered items:

1. Bridge sidewalks, roofs of cut and cover tunnels — curing compound covered by white, reflective type sheeting or continuous wet curing. Curing by either method shall be for at least 10 days.

2. Bridge decks — See Section 6-02.3(11)B.

3. Bridge approach slabs (Class 4000A concrete) - 2 coats of curing compound and continuous wet cure for at least 10-days.

4. Concrete barriers and rail bases – See Section 6-02.3(11)A.

5. All other concrete surfaces — continuous wet cure for at least three days.

In the second paragraph, the first sentence is replaced with the following three new sentences:

During the continuous wet cure, the Contractor shall keep all exposed concrete surfaces saturated with water. Formed concrete surfaces shall be kept in a continuous wet cure by leaving the forms in place. If forms are removed during the continuous wet cure period, the Contractor shall treat the concrete as an exposed concrete surface.

The third paragraph is revised to read:

When curing Class 4000A, two coats of curing compound that complies with Section 9-23.2 shall be applied immediately (not to exceed 15 min.) after tining any portion of the bridge approach slab. The continuous wet cure shall be established as soon as the concrete has set enough to allow covering without damaging the finish.

In the fifth paragraph, the first sentence is revised to read:

If the Plans call for an asphalt overlay on the bridge approach slab, the Contractor shall use the clear curing compound (Type 1, Class B), applying at least 1 gallon per 150 square feet to the concrete surface.

The eighth paragraph is deleted.

6-02.3(11)A2 Slip-Form Barrier

In the fourth paragraph, item number 1, "Type 1D" is revised to read "Type 1".

6-02.3(11)B Curing Bridge Decks

This new section is supplemented with the following new sub-sections:

6-02.3(11)B1 Equipment

The Contractor shall maintain a wet sheen, without developing pooling or sheeting water, using a fogging apparatus consisting of pressure washers with a minimum nozzle output of 1,500 psi, or other means approved by the Engineer.

The Contractor shall submit a bridge deck curing plan to the Engineer a minimum 14 calendar days prior to the pre-concreting conference. The Contractor's plan shall describe

INFORMATIONAL COPY ONLY NOT FOR BIDDING PURPOSES

the sequence and timing that will be used to fog the bridge deck, apply pre-soaked burlap, install soaker hoses and cover the deck with white reflective sheeting.

6-02.3(11)B2 Curing

The fogging apparatus shall be in place and charged for fogging prior to beginning concrete placement for the bridge deck.

The Contractor shall presoak all burlap to be used to cover the deck during curing.

Immediately after the finishing machine passes over finished concrete, the Contractor shall implement the following tasks:

1. The Contractor shall fog the bridge deck while maintaining a wet sheen without developing pooling or sheeting water.

2. The Contractor shall apply the presoaked burlap to the top surface to fully cover the deck without damaging the finish, other than minor marring of the concrete surface. The Contractor shall not apply curing compound.

3. The Contractor shall continue to keep the burlap wet by fog spraying until the burlap is covered by soaker hoses and white reflective sheeting. The Contractor shall place the soaker hoses and whiter reflective sheeting after the concrete has achieved initial set. The Contractor shall charge the soaker hoses frequently so as to keep the burlap covering the entire deck wet during the course of curing.

As an alternative to tasks 2 and 3 above, the Contractor may propose a curing system using proprietary curing blankets specifically manufactured for bridge deck curing. Details of the proprietary curing blanket system, including product literature and details of how the system is to be installed and maintained, shall be submitted to the Engineer for approval.

The wet curing regime as described shall remain in place for at least 14 consecutive calendar days.

6-02.3(12)A Construction Joints in New Construction

The third paragraph is deleted and replaced with the following three new paragraphs:

If the Plans require a roughened surface on the joint, the Contractor shall strike it off to leave grooves at right angles to the length of the member. Grooves shall be installed using one of the following options:

1. Grooves shall be ½ to 1 inch wide, ¼ to ½ inch deep, and spaced equally at twice the width of the groove. Grooves shall terminate approximately 1 ½-inches from the face of concrete.

2. Grooves shall be 1 to 2 inches wide, a minimum of ½-inch deep, and spaced a maximum of three times the width of the groove. Grooves shall terminate approximately 1 ½-inches from the face of concrete.

If the Engineer approves, the Contractor may use an alternate method to produce a roughened surface on the joint, provided that such an alternate method leaves a roughened surface of at least a ¼-inch amplitude.

INFORMATIONAL COPY ONLY / NOT FOR BIDDING PURPOSES

If the first strike-off does not produce the required roughness, the Contractor shall repeat the process before the concrete reaches initial set. The final surface shall be clean and without laitance or loose material.

6-02.3(12)B Construction Joints Between Existing and New Construction

The phrase "by method(s) as approved by the Engineer" is deleted from each paragraph in this section.

6-02.3(13) Expansion Joints

The first sentence of the second paragraph is revised to read:

Joints made of a vulcanized, elastomeric compound (with neoprene as the only polymer) shall be installed with a lubricant adhesive as recommended by the manufacturer.

In the third paragraph, "injuring" is revised to read "damaging".

The following two new subsections are added:

6-02.3(13)A Strip Seal Expansion Joint System

The Contractor shall submit Working Drawings consisting of the strip seal expansion joint shop drawings in accordance with Section 6-03.3(7). These plans shall include, at a minimum, the following:

1. Plan, elevation, and sections of the joint system and all components, with dimensions and tolerances.
2. All material designations.
3. Manufacturer's written installation procedure.
4. Corrosion protection system used on the metal components.
5. Locations of welded shear studs, lifting mechanisms, temperature setting devices, and construction adjustment devices.
6. Method of sealing the system to prevent leakage of water through the joint.

The strip seal shall be removable and replaceable.

The metal components shall conform to ASTM A 36, ASTM A 992, or ASTM A 572, and shall be protected against corrosion by one of the following methods:

1. Zinc metallized in accordance with Section 6-07.3(14).
2. Hot-dip galvanized in accordance with AASHTO M 111.

INFORMATIONAL COPY ONLY, NOT FOR BIDDING PURPOSES

3. Paint in accordance with Section 6-07.3(9). The color of the top coat shall be Federal Standard 595 Color No. 26420. The surfaces embedded in concrete shall be painted only with a shop primer coat of paint conforming to Section 9-08.1(2)C.

The strip seal gland shall be continuous for the full length of the joint with no splices permitted, unless otherwise shown in the Plans.

Other than items shown in the Plans, threaded studs used for construction adjustments are the only items that may be welded to the steel shapes provided they are removed by grinding after use, and the area repaired by application of an approved corrosion protection system.

If the opening between the steel shapes is anticipated to be less than 1-1/2 inches at the time of seal installation, the seal may be installed prior to encasement of the steel shapes in concrete.

After the joint system is installed, the joint shall be flooded with water and inspected, from below the joint, for leakage. If leakage is observed, the joint system shall be repaired by the Contractor, as recommended by the manufacturer.

6-02.3(13)B Compression Seal Expansion Joint System

Compression seal glands shall be selected from the current Qualified Products List and sized as shown in the Plans.

The compression seal expansion joint system shall be installed in accordance with the manufacturer's written recommendations. The Contractor shall submit a Type 1 Working Drawing consisting of the manufacturer's written installation procedure and repair procedures if leakage testing fails.

After the joint system is installed, the joint area shall be flooded with water and inspected, from below the joint, for leakage. If leakage is observed, the joint system shall be repaired by the Contractor, as recommended by the manufacturer.

6-02.3(14) Finishing Concrete Surfaces

The last sentence of the first paragraph is revised to read:

The Contractor shall clean and refinish any stained or discolored surfaces.

The following new subsection is added:

6-02.3(14)D General Requirements for Concrete Surface Finishes Produced by Form Liners

Horizontal and vertical joints shall be spliced in accordance with the manufacturer's printed instructions. The Contractor shall submit a Type 1 Working Drawing consisting of the manufacturer's joint splice instructions.

Horizontal splicing of ABS and plastic form liners to achieve the required height is not permitted and there shall be no horizontal joints. The concrete formed with ABS and plastic form liners shall be given a light sandblast to remove the glossy finish.

Side forms, traffic barrier forms, and pedestrian barrier forms using these form liners may be removed after 24 hours provided the concrete mix used includes a water-reducing admixture, and the concrete reaches 1,400 psi minimum compressive strength before form

INFORMATIONAL COPY ONLY, NOT FOR BIDDING PURPOSES

removal. Concrete in load supporting forms utilizing these form liners shall be cured in accordance with Section 6-02.3(17)N. Once the forms are removed, the Contractor shall treat the joint areas by patching or light sandblasting as required by the Engineer to ensure that the joints are not visible.

Form liners shall be cleaned, reconditioned, and repaired before each use. Form liners with repairs, patches, or defects which, in the opinion of the Engineer, would result in adverse effects to the concrete finish shall not be used.

Care shall be taken to ensure uniformity of color throughout the textured surface. A change in form release agent will not be allowed.

All surfaces formed by the form liner shall also receive a Class 2 surface finish. Form ties shall be a type that leaves a clean hole when removed. All spalls and form tie holes shall be filled as specified for a Class 2 surface finish.

6-02.3(14)C Pigmented Sealer for Concrete Surfaces

The first sentence (up until the colon) is revised to read:

The Contractor shall submit a Type 1 Working Drawing consisting of the pigmented sealer manufacturer's written instructions covering, at a minimum, the following:

The second paragraph is deleted.

In the last sentence of the third paragraph, "approval" is revised to read "acceptance".

6-02.3(15) Date Numerals

The third sentence in the first paragraph is revised to read:

When an existing Structure is widened or when traffic barrier is placed on an existing Structure, the date shall be for the year in which the original Structure was completed.

6-02.3(16) Plans for Falsework and Formwork

This section is revised to read:

The Contractor shall submit all plans for falsework and formwork as Type 2E Working Drawings. Submittal is not required for footing or retaining wall formwork if the wall is 4 feet or less in height (excluding pedestal height).

The design of falsework and formwork shall be based on:

1. Applied loads and conditions which are no less severe than those described in Section 6-02.3(17)A, Design Loads;

2. Allowable stresses and deflections which are no greater than those described in Section 6-02.3(17)B, Allowable Stresses and Deflections;

3. Special loads and requirements no less severe than those described in Section 6-02.3(17)C, Falsework and Formwork at Special Locations;

4. Conditions required by other Sections of 6-02.3(17), Falsework and Formwork.

The falsework and formwork plans shall be scale drawings showing the details of proposed construction, including: sizes and properties of all members and components; spacing of

INFORMATIONAL COPY ONLY, NOT FOR BIDDING PURPOSES

bents, posts, studs, wales, stringers, wedges and bracing; rates of concrete placement, placement sequence, direction of placement, and location of construction joints; identification of falsework devices and safe working loads as well as identification of any bolts or threaded rods used with the devices including their diameter, length, type, grade, and required torque. The falsework plans shall show the proximity of falsework to utilities or any nearby Structures including underground Structures. Formwork accessories shall be identified according to Section 6-02.3(17)H, Formwork Accessories. All assumptions, dimensions, material properties, and other data used in making the structural analysis shall be noted on the drawing.

The Contractor shall furnish associated design calculations to the Engineer as part of the submittal. The design calculations shall show the stresses and deflections in load supporting members. Construction details which may be shown in the form of sketches on the calculation sheets shall be shown in the falsework or formwork drawings as well. Falsework or formwork plans will be rejected in cases where it is necessary to refer to the calculation sheets for information needed for complete understanding of the falsework and formwork plans or how to construct the falsework and formwork.

Each sheet of falsework and formwork plans shall carry the following:

1. The initials and dates of all participating design professionals.

2. Clear notation of all revisions including identification of who authorized the revision, who made the revision, and the date of the revision.

3. The Contract number, Contract title, and sequential sheet number. These shall also be on any related documents.

4. Identify where the falsework and formwork plan will be utilized by referencing Contract Plan sheet number and related item or detail.

6-02.3(16)A Nonpreapproved Falsework and Formwork Plans

This section, including title, is deleted in its entirety and replaced with the following:

6-02.3(16)A Vacant

6-02.3(16)B Preapproved Formwork Plans

This section, including title, is revised to read:

6-02.3(16)B Pre-Contract Review of Falsework and Formwork Plans

The Contractor may request pre-contract review of formwork plans for abutments, wingwalls, diaphragms, retaining walls, columns, girders and beams, box culverts, railings, and bulkheads. Plans for falsework supporting the bridge deck for interior spans between precast prestressed concrete girders may also be submitted for pre-contract review.

To obtain pre-contract review, the Contractor shall electronically submit drawings and design calculations in PDF format directly to:

tmittge@grantcountywa.gov

The Bridge and Structures Office, Construction Support Engineer will return the falsework or formwork plan to the Contractor with review notes, an effective date of review, and any revisions needed prior to use. For each contract on which the pre-reviewed falsework or

INFORMATIONAL COPY ONLY NOT FOR BIDDING PURPOSES

formwork plans will be used, the Contractor shall submit a copy to the Engineer. Construction shall not begin until the Engineer has given concurrence.

If the falsework or formwork being constructed has any deviations to the preapproved falsework or formwork plan, the Contractor shall submit plan revisions for review and approval in accordance with Section 6-02.3(16).

6-02.3(17)A Design Loads

The fifth paragraph is revised to read:

Live loads shall consist of a minimum uniform load of not less than 25 psf, applied over the entire falsework plan area, plus the greater of:

1. Actual weights of the deck finishing equipment applied at the rails, or;

2. A minimum load of 75 pounds per linear foot applied at the edge of the bridge deck.

6-02.3(17)J Face Lumber, Studs, Wales, and Metal Forms

The second to last paragraph is deleted.

6-02.3(17)O Early Concrete Test Cylinder Breaks

The third paragraph is revised to read:

The cylinders shall be cured in the field in accordance with WSDOT FOP for AASHTO T 23 Section 10.2 Field Curing.

6-02.3(20) Grout for Anchor Bolts and Bridge Bearings

The first five paragraphs are deleted and replaced with the following two new paragraphs:

Grout shall conform to Section 9-20.3(2) for anchor bolts and for bearing assemblies with bearing plates. Grout shall conform to Section 9-20.3(3) for elastomeric bearing pads and fabric pad bearings without bearing plates.

Grout shall be a workable mix with a viscosity that is suitable for the intended application. The Contractor shall receive approval from the Engineer before using the grout.

6-02.3(24)E Welding Reinforced Steel

This section is revised to read:

Welding of steel reinforcing bars shall conform to the requirements of ANSI/AWS D1.4 Structural Welding Code - Reinforcing Steel, latest edition, except where superseded by the Special Provisions, Plans, and these Specifications.

Before any welding begins, the Contractor shall submit a Type 2 Working Drawing consisting of the welding procedure for each type of welded splice to be used, including the weld procedure specifications and joint details. The weld procedure specifications shall be written on a form taken from AWS D1.4 Annex A, or equivalent. Test results of tensile strength, macroetch, and visual examination shall be included. The form shall be signed and dated.

Welders shall be qualified in accordance with AWS D1.4. The Contractor shall be responsible for the testing and qualification of welders, and shall submit Type 2 Working

INFORMATIONAL COPY ONLY, NOT FOR BIDDING PURPOSES

Drawings consisting of welder qualification and retention records. The weld joint and welding position a welder is qualified in shall be in accordance with AWS D1.4. The welder qualifications shall remain in effect indefinitely unless, (1) the welder is not engaged in a given process of welding for which the welder is qualified for a period exceeding six months, or (2) there is some specific reason to question a welder's ability.

Filler metals used for welding reinforcing bars shall be in accordance with AWS D1.4 Table 5.1. All filler metals shall be low-hydrogen and handled in compliance with low-hydrogen practices specified in the AWS code.

Short circuiting transfer with gas metal arc welding will not be allowed. Slugging of welds will not be allowed.

For the purpose of compatibility with AWS D1.4, welded lap splices for spiral or hoop reinforcing shall be considered Flare-V groove welds, indirect butt joints.

The Contractor is responsible for using a welding sequence that will limit the alignment distortion of the bars due to the effects of welding. The maximum out-of-line permitted will be 1/4 inch from a 3.5-foot straight-edge centered on the weld and in line with the bar.

The ground wire from the welding machine shall be clamped to the bar being welded.

Where epoxy-coated steel reinforcing bars are specified to be spliced by welding, the epoxy coating shall be left off or removed from the surfaces to be heated, but in no cases less than six inches of each bar being welded. After the welding is complete, the Contractor shall apply epoxy patching material to the uncoated portions of the bar in accordance with Section 6-02.3(24)H.

6-02.3(25) Prestressed Concrete Girders

In the first paragraph, the last sentence is revised to read:

WSDOT certification will be granted at, and renewed during, the annual prestressed plant review and approval process in accordance with WSDOT Materials Manual M 46-01.04 Standard Practice QC 6.

6-02.3(25)I Fabrication Tolerances

In the first paragraph, item number 21 is revised to read:

21. Differential Camber Between Girders in a Span (measured in place at the job site):

For deck bulb tee girders and PCPS members with grouted shear keys:	Cambers shall be equalized when the differences in cambers between adjacent girders exceeds ± ¼ inch
For deck bulb tee girders and PCPS members without grouted shear keys:	Cambers shall be equalized when the differences in cambers between adjacent girders exceeds ± ½ inch
For all other prestressed concrete girders:	± ⅛ inch per 10 feet of girder length

6-02.3(25)O Deck Bulb Tee Girder Flange Connection

This section, including title, is revised to read:

INFORMATIONAL COPY ONLY, NOT FOR BIDDING PURPOSES

Deck Bulb Tee Girder Flange and PCPS Member Connection

The Contractor shall submit a method of equalizing deflections as a Type 1 Working Drawing. Any temporary strands in the top flange shall be cut per Section 6-02.3(25)N prior to equalizing girder deflections.

Deck bulb tee girders and PCPS members with grouted shear keys shall be constructed in the following sequence:

1. Deflections shall be equalized per the Contractor's equalization plan.

2. Intermediate diaphragms shall be placed and weld ties shall be welded. Welding ground shall be attached directly to the steel plates being welded when welding the weld-ties.

3. The keyways shown in the Plans to receive grout shall be filled flush with the surrounding surfaces using a grout conforming to Section 9-20.3(2).

4. Equalization equipment shall not be removed and other construction equipment shall not be placed on the structure until intermediate diaphragms have attained a minimum compressive strength of 2,500 psi and keyway grout has achieved a minimum compressive strength of 4000 psi.

Deck bulb tee girders and PCPS members without grouted shear keys shall be constructed in the following sequence:

1. Deflections shall be equalized per the Contractor's equalization plan.

2. Intermediate diaphragms shall be placed and weld ties shall be welded. Welding ground shall be attached directly to the steel plates being welded when welding the weld-ties.

3. Equalization equipment shall not be removed and other construction equipment shall not be placed on the structure until intermediate diaphragms have attained a minimum compressive strength of 2,500 psi.

6-02.3(26)F Prestressing Reinforcement

The last sentence in the fourth paragraph is revised to read:

If the prestressing reinforcement will not be stressed and grouted for more than 7 calendar days after it is placed in the ducts, the Contractor shall place an approved corrosion inhibitor conforming to Federal Specification MIL-I-22110C in the ducts.

6-02.3(28) Precast Concrete Panels

In the first paragraph, the third sentence is revised to read:

WSDOT Certification will be granted at, and renewed during, the annual precast plant review and approval process in accordance with WSDOT Materials Manual M 46-01.04 Standard Practice QC 7.

INFORMATIONAL COPY ONLY NOT FOR BIDDING PURPOSES

6-02.4 Measurement

The following three new paragraphs are inserted before the last paragraph:

Expansion joint system___seal - superstr. will be measured by the linear foot along its completed line and slope.

Expansion joint modification will be measured by the linear foot of expansion joint modified along its completed line and slope.

Prestressed concrete girder will be measured by the linear foot of girder specified in the Proposal.

6-02.5 Payment

In the paragraph following the bid item "Commercial Concrete", per cubic yard the second sentence is revised to read:

All costs in connection with concrete curing, producing concrete surface finish with form liners, and furnishing and applying pigmented sealer to concrete surfaces as specified, shall be included in the unit contract price per cubic yard for "Conc. Class ____".

The following new paragraph is inserted after the bid item "Superstructure (name bridge)", lump sum:

All costs in connection with constructing, finishing and removing the bridge deck test slab as specified in Section 6-02.3(10)D1 shall be included in the lump sum Contract price for "Superstructure___" or "Bridge Deck___" for one bridge in each project, as applicable.

In the paragraph following the bid item "Epoxy-Coated St. Reinf. Bar ___", per pound, the first sentence is revised to read:

Payment for reinforcing steel shall include the cost of drilling holes in concrete for, and setting, steel reinforcing bar dowels with epoxy bonding agent, and furnishing, fabricating, placing, and splicing the reinforcement.

The bid item "Cure Box", lump sum and paragraph following bid item are deleted.

The following three new bid items are inserted before the bid item "Bridge Approach Slab", per square yard:

"Expansion Joint System _____ - Superstr.", per linear foot.

"Expansion Joint Modification - ___", per linear foot.

"Prestressed Conc. Girder ___", per linear foot.

Section 6-03, Steel Structures
January 5, 2015

6-03.2 Materials

The first sentence in the fifth paragraph is revised to read:

INFORMATIONAL COPY ONLY, NOT FOR BIDDING PURPOSES

The Contractor shall submit Type 1 Working Drawings describing the methods for visibly marking the material so that it can be traced.

6-03.3(7) Shop Plans

This section is revised to read:

The Contractor shall submit all shop detail plans for fabricating the steel as Type 2 Working Drawings.

If these plans will be submitted directly from the fabricator, the Contractor shall so notify the Engineer in writing.

No material shall be fabricated until: (1) the Working Drawing review is complete, and (2) the Engineer has accepted the materials source.

Before physical completion of the project, the Contractor shall furnish the Engineer one set of reproducible copies of the as-built shop plans. The reproducible copies shall be clear, suitable for microfilming, and on permanent sheets that measure no smaller than 11 by 17-inches. Alternatively, the shop drawings may be provided in an electronic format with the concurrence of the Engineer.

6-03.3(7)A Erection Methods

The first paragraph is revised to read:

Before beginning to erect any steel Structure, the Contractor shall submit Type 2E Working Drawings consisting of the erection plan and procedure describing the methods the Contractor intends to use.

The second paragraph (up until the colon) is revised to read:

The erection plan and procedure shall provide complete details of the erection process including, at a minimum, the following:

The third paragraph (up until the colon) is revised to read:

As part of the erection plan Working Drawings, the Contractor may submit details of an engineered and fabricated lifting bracket bolted to the girder top flanges providing the following requirements are satisfied:

In the third paragraph, the second sentence of item number 4 is revised to read:

Certification documentation from a previous project may be submitted;

The last sentence of the fourth paragraph is deleted.

The last paragraph is deleted.

6-03.3(10) Straightening Bent Material

In the first paragraph, the last sentence is revised to read:

A limited amount of localized heat may be applied only if carefully planned and supervised, and only in accordance with the heat-straightening procedure Working Drawing submittal.

The third paragraph is revised to read:

INFORMATIONAL COPY ONLY, NOT FOR BIDDING PURPOSES

After straightening, the Contractor shall inspect the member for fractures using a method proposed by the Contractor and accepted by the Contracting Agency.

The last paragraph is revised to read:

The procedure for heat straightening of universal mill (UM) plates by the mill or the fabricator shall be submitted as a Type 2 Working Drawing.

6-03.3(14) Edge Finishing

In the first paragraph, the last sentence is revised to read:

Corners along exposed edges shall be broken by light grinding or another method acceptable to the Engineer to achieve an approximate 1/16-inch chamfer or rounding.

In the fifth paragraph, the last sentence is revised to read:

The fabricator shall prevent excessive hardening of flange edges through preheating, post heating, or control of the burning process as recommended by the steel manufacturer.

The sixth paragraph is revised to read:

Hardness testing shall consist of testing thermal-cut edges with a portable hardness tester. The hardness tester, and its operating test procedures, shall be submitted as a Type 1 Working Drawing. The hardness tester shall be convertible to Rockwell C scale values.

In the last paragraph, the last sentence is revised to read:

If thermal-cutting operations conform to procedures established by the steel manufacturer, and hardness testing results are consistently within acceptable limits, the Engineer may authorize a reduction in the testing frequency.

6-03.3(15) Planing of Bearing Surfaces

This section is supplemented with the following new paragraph:

Where mill to bear is specified in the Plans, the bearing end of the stiffener shall be flush and square with the flange and shall have at least 75 percent of this area in contact with the flange.

6-03.3(25) Welding and Repair Welding

In the first paragraph, the first sentence is revised to read:

Welding and repair welding of all steel bridges shall comply with the AASHTO/AWS D1.5M/D1.5, latest edition, Bridge Welding Code.

In the second paragraph, the last sentence is revised to read:

No welding, including tack and temporary welds shall be done in the shop or field unless the location of the welds is shown on the shop drawings reviewed and accepted by the Engineer.

In the third paragraph, the first sentence is revised to read:

Welding procedures shall accompany the shop drawing Working Drawing submittal.

INFORMATIONAL COPY ONLY - NOT FOR BIDDING PURPOSES

In the fourth paragraph, the first sentence is revised to read:

> Welding shall not begin until completion of the shop plan Working Drawing review as required in Section 6-03.3(7).

In item number 1 of the ninth paragraph, "approves" is revised to read "concurs".

6-03.3(25)A3 Ultrasonic Inspection

The following new paragraph is inserted before the last paragraph:

> A minimum of 30 percent of complete penetration vertical welds on steel column jackets thicker than 5/16-inch, within 1.50 column jacket diameter of the top and bottom of each column, shall be inspected. If any rejectable flaws are found, 100 percent of the weld within the specified limits shall be inspected. The largest column cross section diameter for tapered column jackets shall constitute one column jacket diameter.

6-03.3(25)A4 Magnetic Particle Inspection

Items number 3 and 4 are revised to read:

3. Complete penetration groove welds on plates $^{5}/_{16}$-inch or thinner (excluding steel column jackets) shall be 100 percent tested by the magnetic particle method. Testing shall apply to both sides of the weld, if backing plate is not used. The ends of each complete penetration groove weld at plate edges shall be tested by the magnetic particle method.

4. A minimum of 30 percent of complete penetration vertical welds on steel column jackets $^{5}/_{16}$-inch or thinner, within 1.50 column jacket diameters of the top and bottom of each column, shall be magnetic particle inspected. The largest column cross section diameter for tapered column jackets shall constitute one column jacket diameter.

The last paragraph is supplemented with the following new sentence:

> If any rejectable flaws are found in any test length of item 4 above, 100 percent of the weld within the specified limits shall be inspected.

6-03.3(27) High Strength Bolt Holes

The last paragraph is revised to read:

> The Contractor shall submit Type 2 Working Drawings consisting of a detailed outline of the procedures proposed to accomplish the work from initial drilling through shop assembly.

6-03.3(27)C Numerically Controlled Drilled Connections

In the second paragraph, the first sentence is revised to read:

> The Contractor shall submit Type 1 Working Drawings consisting of a detailed outline of proposed N/C procedures.

6-03.3(29) Welded Shear Connectors

This section's content is deleted and replaced with the following:

INFORMATIONAL COPY ONLY NOT FOR BIDDING PURPOSES

Installation, production control, and inspection of welded shear connectors shall conform to Chapter 7 of the AASHTO/AWS D1.5M/D1.5:2010 Bridge Welding Code. If welded shear connectors are installed in the shop, installation shall be completed prior to applying the shop primer coat in accordance with Section 6-07.3(9)G. If welded shear connectors are installed in the field, the steel surface to be welded shall be prepared to SSPC-SP 11, power tool cleaning, just prior to welding.

6-03.3(33) Bolted Connections

In the second paragraph, the first sentence is revised to read:

The Contractor shall submit Type 1 Working Drawings providing documentation of the bolt tension calibrator, including brand, capacity, model, date of last calibration, and manufacturer's instructions for use.

In the second sentence of the second paragraph, the word "approved" is deleted.

In item number 3 of the fifth paragraph, "approved" is revised to read "specified".

In the tenth paragraph, item number 3, "approved" is revised to read "accepted" in the second and third sentences of the first paragraph.

In the tenth paragraph, item number 3, the third paragraph is revised to read:

The Contractor shall submit Type 1 Working Drawings of the tension control bolt assembly, including bolt capacities, type of bolt, nut, and washer lubricant, method of packaging and protection of the lubricated bolt, installation equipment, calibration equipment, and installation procedures.

In the second sentence of the last paragraph, "approved" is revised to read "accepted".

In the last paragraph, the fourth sentence is revised to read:

Bolts to be reused shall be relubricated in accordance with the manufacturer's recommendations.

6-03.3(33)A Pre-Erection Testing

In the fifth sentence of the first paragraph, "approved" is revised to read "accepted".

The third paragraph is revised to read:

The Contractor shall submit Type 1 Working Drawings consisting of the manufacturer's detailed procedure for pre-erection (rotational capacity) testing of tension control bolt assemblies.

6-03.3(33)B Bolting Inspection

In the last sentence of the first paragraph, "approved" is revised to read "specified".

The last paragraph is revised to read:

The Contractor shall submit Type 1 Working Drawings consisting of the manufacturer's detailed procedure for routine observation to ensure proper use of the tension control bolt assemblies.

INFORMATIONAL COPY ONLY NOT FOR BIDDING PURPOSES

6-03.3(42) Surface Condition

The first subparagraph is revised to read:

Painted steel surfaces shall be cleaned by methods required for the type of staining. The Contractor shall submit a Type 1 Working Drawing of the cleaning method.

Section 6-04, Timber Structures
January 5, 2015

6-04.3(3) Shop Details

This section is revised to read:

The Contractor shall submit Type 2 Working Drawings consisting of shop detail plans for all treated timber. These plans shall show dimensions for all cut, framed, or bored timbers.

Section 6-06, Bridge Railings
January 5, 2015

6-06.3(2) Metal Railings

The second paragraph is revised to read:

Before fabricating the railing, the Contractor shall submit Type 2 Working Drawings consisting of the shop plans. The Contractor may substitute other rail connection details for those shown in the Plans if details of these changes show in the shop plans and if the Engineer accepts them in the Working Drawing response comments. In reviewing the shop plan Working Drawings, the Engineer indicates only that they are adequate and complete enough. The review does not indicate a check on dimensions.

Section 6-07, Painting
January 5, 2015

6-07.3 Painting

This section is supplemented with the following new subsections:

6-07.3(14) Metallic Coatings

6-07.3(14)A General Requirements

This specification covers the requirements for thermal spray metallic coatings, with and without additional paint coats, as a means to prevent corrosion.

The coating system consists of surface preparation by wash cleaning and abrasive blast cleaning, thermal spray application of a metallic coating using a material made specifically for that purpose, and, when specified, shop primer coat or shop primer coat plus top coat in accordance with Section 6-07.3(11)A. The system also includes inspection and acceptance requirements.

6-07.3(14)B Reference Standards

SSPC-SP 10/NACE No. 2	Near White Blast Cleaning
SSPC CS 23.00	Guide for Thermal Spray Metallic Coating Systems

INFORMATIONAL COPY ONLY, NOT FOR BIDDING PURPOSES

ASTM-C-633	Standard Test Method for Adhesion or Cohesion Strength of Thermal Spray Coatings
ASTM D 4417	Standard Test Methods for Field Measurement of Surface Profile of Blast-Cleaned Steel
ASTM D 6386	Standard Practice for Preparation of Zinc (Hot-Dip Galvanized) Coated Iron and Steel Product and Hardware Surfaces for Painting
ASTM D 4541	Standard Test Method for Pull-Off Strength of Coatings Using Portable Adhesion Testers
ANSI/AWS C2.18	Guide for the Protection of Steel with Thermal Sprayed Coatings of Aluminum, Zinc and their Alloys and Composites

6-07.3(14)C Quality Assurance

A representative sample of each lot of the coating material used shall be submitted to the Engineer for analysis prior to use. Zinc shall have a minimum purity of 99.9 percent. Zinc Aluminum 85/15 wire shall be 14 percent minimum to 16 percent maximum aluminum.

The thermal sprayed coating shall have a uniform appearance. The coating shall not contain any blisters, cracks, chips or loosely adhering particles, oil or other surface contaminants, nodules, or pits exposing the substrate.

The thermal spray coating shall adhere to the substrate with a minimum bond of 700 psi. The Contractor's QA program shall include thermal spray coating bond testing.

The Engineer may cut through the coating with a knife or chisel. If upon doing so, any part of the coating lifts away from the base metal 1/4 in. or more ahead of the cutting blade without cutting the metal, then the bond is considered not effective and is rejected.

Coated areas which have been rejected or damaged in the inspection procedure described shall have the defective sections blast cleaned to remove all of the thermal sprayed coating and shall then be recoated. Before resubmittal and inspection, those sections where coating has not reached the required thickness shall be sprayed with additional metal until that thickness is achieved.

6-07.3(14)D Submittals

The Contractor shall submit to the Engineer, prior to abrasive blast cleaning, a 12 inch square steel plate, of the same material and approximate thickness of the steel to be coated, blasted clean in accordance with Section 6-07.3(14)E. The sample plate will be checked for specified angular surface pattern, the abrasive grit size and type used, and the procedure used. This plate shall be used as the visual standard to determine the acceptability of the cleaned surface. In the event the Contractor's cleaning operation is inferior to the sample plate, the Contractor shall be required to correct the cleaning operation to do a job comparable to the specimen submitted.

At the same time as submitting the abrasive blast cleaned steel plate sample, the Contractor shall submit to the Engineer, a second 12 inch square steel plate of the same material and thickness, cleaned and thermal spray coated in accordance with the same processes and with the same equipment as intended for use in applying the thermal spray coatings. The Engineer may request additional cleaned and thermal spray coated samples to be produced and submitted coincident with thermal spray coating of the items specified in the Plans to receive thermal spray coatings.

INFORMATIONAL COPY ONLY NOT FOR BIDDING PURPOSES

6-07.3(14)E Surface Preparation

Surface irregularities (e.g., sharp edges and/or carburized edges, cracks, delaminations, pits, etc.) interfering with the application of the coating shall be removed or repaired, prior to wash cleaning. Thermal cut edges shall be ground to reduce hardness to attain the surface profile required from abrasive blast cleaning.

All dirt, oil, scaling, etc. shall be removed prior to blast cleaning. All surfaces shall be wash cleaned with either clean water at 8000 psi or water and detergent at 2000 psi with two rinses with clean water.

The surface shall be abrasive blast cleaned to near white metal (SSPC-SP 10). The surface profile shall be measured using a surface profile comparator, replica tape, or other method suitable for the abrasive being used in accordance with ASTM D 4417.

Where zinc coatings up to and including 0.009 inch thick are to be applied, one of the following abrasive grits shall be used with pressure blast equipment to produce a 3.0 mils AA anchor tooth pattern:

1. Aluminum oxide or silicon carbide
   mesh size: SAE G-25 to SAE G-40

2. Hardened steel grit
   mesh size: SAE G-25 to SAE G-40

3. Garnet, flint, or crushed nickel or black beauty coal slag
   mesh size: SAE G-25 to SAE G-50

Where zinc coatings greater than 0.010 inch thick are to be applied, one of the following abrasive grits shall be used with pressure blast equipment to produce a 5.0 mils AA anchor tooth pattern:

1. Aluminum oxide or silicon carbide
   mesh size: SAE G-18 to SAE G-25

2. Hardened steel grit
   mesh size: SAE G-18 to SAE G-25

3. Garnet, flint, or crushed nickel or black beauty coal slag
   mesh size: SAE G-18 to SAE G-25

The pressure of the blast nozzle, as measured with a needle probe gauge, with pressure type blasting equipment shall be as follows:

1. With aluminum oxide, silicon carbide, flint, or slag - 50 psi minimum and 60 psi maximum.

2. With garnet or steel grit - 75 psi minimum.

The pressure at the blast nozzle, with siphon blasting (suction blasting), shall be as follows:

1. With aluminum oxide, silicon carbide, flint, or slag - 75 psi maximum.

INFORMATIONAL COPY ONLY NOT FOR BIDDING PURPOSES

2. With garnet or steel grit - 90 psi maximum.

The abrasive blast stream shall be directed onto the substrate surface at a spray angle of 75 to 90 degrees, and moved side to side. The nozzle to substrate distance shall be 4 to 12 inches.

6-07.3(14)F Application of Metallic Coating

No surface shall be sprayed which shows any sign of condensed moisture or which does not comply with Section 6-07.3(14)E. If rust bloom occurs within the holding time between abrasive blast cleaning and thermal spraying, the surface shall be reblasted at a blast angle as close to perpendicular to the surface as possible to achieve a 2.0 to 4.0 mil anchor tooth pattern. Thermal spraying shall not take place when the relative humidity is 90% or greater, when the steel temperature is less than 5°F above the dew point, or when the air or steel temperature is less than 40°F.

Clean, dry air shall be used with not less than 50 psi air pressure at the air regulator. Not more than 50 feet of 3/8 in. ID hose shall be used between the air regulator and the metallizing gun. The metallizing gun shall be started and adjusted with the spray directed away from the work. During the spraying operation and depending upon the equipment being used, the gun shall be held as close to perpendicular as possible to the surface from 5 to 8 inches from the surface of the work.

Manual spraying shall be done in a block pattern, typically 2 feet by 2 feet square. The sprayed metal shall overlap on each pass to ensure uniform coverage. The specified thickness of the coating shall be applied in multiple layers. In no case are fewer than two passes of thermal spraying, overlapping at right angles, acceptable.

At least one single layer of coating shall be applied within 4 hours of blasting and the surface shall be completely coated to the specified thickness within 8 hours of blasting.

The minimum coating thickness shall be 6 mils unless otherwise shown in the Plans.

6-07.3(14)G Applications of Shop Coats and Field Coats

The surface shall be wiped clean with solvent immediately before applying the wash primer. The wash primer shall have a low viscosity appropriate for absorption into the thermal spray coating, and shall be applied within 8 hours after completion of thermal spraying or before oxidation occurs. The dry film thickness of the wash primer shall not exceed 0.5 mils or be less than 0.3 mils. It shall be applied using an appropriate spray gun except in those areas where brush or roller application is necessary. The subsequent shop primer or field coats shall be applied no less than one-half hour after a wash primer.

The shop primer coat, when specified, shall be applied in accordance with Section 6-07.3(11)A and the paint manufacturer's recommendations.

All field coats, when specified, shall be applied in accordance with Section 6-07.3(11)A and the paint manufacturer's recommendations. The color of the top coat shall conform to Section 6-03.3(30) as supplemented in these Special Provisions.

6-07.3(2) Submittals

The first paragraph is revised to read:

The Contractor shall submit Type 2 Working Drawings of the painting plan.

INFORMATIONAL COPY ONLY NOT FOR BIDDING PURPOSES

6-07.3(10)A Containment

The second paragraph is revised to read:

> The containment length shall not exceed the length of a span (defined as pier to pier). The containment system shall not cause any damage to the existing structure. All clamps and other attachment devices shall be padded or designed such that they shall not mark or otherwise damage the steel member to which they are attached. All clamps and other attachment devices shall be fully described in the Contractor's painting plan Working Drawing submittal. Field welding of attachments to the existing structure will not be allowed. The Contractor shall not drill holes into the existing structure or through existing structural members except as shown in the Contractor's painting plan Working Drawing submittal. All provisions for dust collection, ventilation and auxiliary lighting within the containment system shall be fully described the Contractor's painting plan Working Drawing submittal.

In the second to last paragraph, "approved" is revised to read "accepted".

6-07.3(10)E Surface Preparation – Full Paint Removal

This section is revised to read:

> For structures where full removal of existing paint is specified, the Contractor shall remove any visible oil, grease, and road tar in accordance with SSPC-SP 1.
>
> Following preparation by SSPC-SP 1, all steel surfaces to be painted shall be prepared in accordance with SSPC-SP 10, near-white metal blast cleaning. Surfaces inaccessible to near-white metal blast cleaning shall be prepared in accordance with SSPC-SP 11, power tool cleaning to bare metal, as allowed by the Engineer.

6-07.3(10)F Collecting, Testing and Disposal of Containment Waste

In the first paragraph, the last sentence before the numbered list is revised (up until the colon) to read:

> The sealed waste containers shall be stored in accordance with Section 1-06.4, the painting plan, and the following requirements:

In the second paragraph, the first sentence is revised to read:

> All material collected by and removed from the containment system shall be taken to a landside staging area, provided by the Contractor, for further processing and storage prior to transporting for disposal.

The ninth paragraph is revised to read:

> The Contractor shall submit a Type 1 Working Drawing of all TCLP results.

The first sentence of the last paragraph is revised to read:

> The Contractor shall submit a Type 1 Working Drawing consisting of waste disposal documentation within 15 working days of each disposal.

6-07.3(10)K Coating Thickness

The last paragraph is revised to read:

INFORMATIONAL COPY ONLY, NOT FOR BIDDING PURPOSES

If the specified number of coats does not produce a combined dry film thickness of at least the sum of the thicknesses required per coat, or if an individual coat does not meet the minimum thickness, or if visual inspection shows incomplete coverage, the coating system will be rejected, and the Contractor shall discontinue painting and surface preparation operations and shall submit a Type 2 Working Drawing of the repair proposal. The repair proposal shall include documentation demonstrating the cause of the less than minimum thickness along with physical test results, as necessary, and modifications to work methods to prevent similar results. The Contractor shall not resume painting or surface preparation operations until receiving the Engineer's acceptance of the completed repair.

6-07.3(10)L Environmental Condition Requirements Prior to Application of Paint

In the last paragraph, the second to last sentence is revised to read:

If a paint system manufacturer's recommendations allow for application of a paint under environmental conditions other than those specified, the Contractor shall submit a Type 2 Working Drawing consisting of a letter from the paint manufacturer specifying the environmental conditions under which the paint can be applied.

In the last sentence of the last paragraph, "approval" is revised to read "concurrence".

6-07.3(11)B1 Submittals

The first paragraph (up until the colon) is revised to read:

The Contractor shall submit Type 2 Working Drawings consisting of the following information:

6-07.3(11)B3 Galvanized Surface Cleaning and Preparation

The first paragraph is revised to read:

Galvanized surfaces receiving the powder coating shall be cleaned and prepared for coating in accordance with ASTM D 6386, and the project-specific powder coating plan.

6-07.3(11)B4 Powder Coating Application and Curing

The first paragraph (up until the colon) is revised to read:

After surface preparation, the two-component powder coating shall be applied in accordance with the powder coating manufacturer's recommendations, the project-specific powder coating plan, and as follows:

6-07.3(11)B5 Testing

In the fifth sentence of the first paragraph, the phrase "as approved by the Engineer" is deleted.

The second paragraph is revised to read:

The results of the QC testing shall be documented in a QC report, and submitted as a Type 2 Working Drawing.

In the fourth paragraph, the phrase "as approved by the Engineer" is deleted.

In the last paragraph, "Engineer's approval" is revised to read "Engineer's acceptance".

6-07.3(11)B6 Coating Protection for Shipping

The phrase "as approved by the Engineer" is deleted from this section.

INFORMATIONAL COPY ONLY, NOT FOR BIDDING PURPOSES

The first sentence of the last paragraph is revised to read:

> After erection, all coating damage due to the Contractor's shipping, storage, handling, and erection operations shall be repaired by the Contractor in accordance with the project-specific powder coating plan.

6-07.5 Payment

The following new paragraph is inserted before the last paragraph:

> All costs in connection with producing the metallic coatings as specified shall be included in the unit contract price for the applicable item or items of work.

Section 6-10, Concrete Barrier
January 5, 2015

6-10.1 Description

In the second paragraph, "approved" is revised to read "specified".

6-10.3 Construction Requirements

In the first paragraph, "approved" is revised to read "specified".

6-10.3(5) Temporary Concrete Barrier

The last sentence of the first paragraph is deleted.

The second paragraph is revised to read:

> If the Contract calls for the removal and resetting of permanent barrier, and the permanent barrier is not required to remain in place until reset, the permanent barrier may be substituted for temporary concrete barrier. Any of the permanent barrier damaged during its use as temporary barrier will become the property of the Contractor and be replaced with permanent barrier when the permanent barrier is reset to its permanent location.

The third paragraph is revised to read:

> All barrier shall be in good condition, without cracks, chips, spalls, dirt, or traffic marks. If any barrier segment is damaged during or after placement, the Contractor shall immediately repair it to the Engineer's satisfaction or replace it with an undamaged section.

The following new paragraph is inserted after the third paragraph:

> Delineators shall be placed on the traffic face of the barrier 6 inches from the top and spaced a maximum of 40 feet on tangents and 20 feet through curves. The reflector color shall be white on the right side of traffic and yellow on the left side of traffic. The Contractor shall maintain, replace and clean the delineators when ordered by the Engineer.

Section 6-11, Reinforced Concrete Walls
January 5, 2015

6-11.3(1) Submittals

The first paragraph is revised to read:

INFORMATIONAL COPY ONLY, NOT FOR BIDDING PURPOSES

The Contractor shall submit Type 2E Working Drawings consisting of excavation shoring plans in accordance with Section 2-09.3(3)D.

The second paragraph is revised to read:

The Contractor shall submit Type 2E Working Drawings of falsework and formwork plans in accordance with Sections 6-02.3(16) and 6-02.3(17).

The third paragraph (up until the colon) is revised to read:

If the Contractor elects to fabricate and erect precast concrete wall stem panels, Type 2E Working Drawings of the following information shall be submitted in accordance with Section 6-02.3(28)A:

The last paragraph is deleted.

6-11.3(3) Precast Concrete Wall Stem Panels

In the third paragraph, the phrase "as approved by the Engineer" is deleted.

Section 6-13, Structural Earth Walls
January 5, 2015

6-13.3(1) Quality Assurance

In the first paragraph, the first sentence is revised to read:

The structural earth wall manufacturer shall provide a qualified and experienced representative to resolve wall construction problems.

In the first paragraph, the last sentence is revised to read:

Recommendations made by the structural earth wall manufacturer's representative shall be followed by the Contractor.

In the second paragraph, item number 4 is revised to read:

4. The base of the structural earth wall excavation shall be within three inches of the staked elevations, unless otherwise accepted or specified by the Engineer.

In the second paragraph, item number 6 is revised to read:

6. The backfill reinforcement layers shall be located horizontally and vertically within one inch of the locations shown in the structural earth wall working drawings.

6-13.3(2) Submittals

In the first paragraph, the first sentence is revised to read:

The Contractor, or the supplier as the Contractor's agent, shall furnish a Manufacturer's Certificate of Compliance certifying that the structural earth wall materials conform to the specified material requirements.

The second paragraph is revised to read:

INFORMATIONAL COPY ONLY, NOT FOR BIDDING PURPOSES

A Type 1 Working Drawing of all test results, performed by the Contractor or the Contractor's supplier, which are necessary to assure compliance with the specifications, shall submitted along with each Manufacturer's Certificate of Compliance.

In the third paragraph, the first sentence is revised to read:

Before fabrication, the Contractor shall submit a Type 1 Working Drawing consisting of the field construction manual for the structural earth walls, prepared by the wall manufacturer.

In the fourth paragraph, the first sentence is revised to read:

The Contractor, through the license/patent holder for the structural earth wall system, shall submit Type 2E Working Drawings consisting of detailed design calculations and details.

The last paragraph is deleted.

6-13.3(3) Excavation and Foundation Preparation

In the first paragraph, the last two sentences are revised to read:

The foundation for the structure shall be graded level for a width equal to or exceeding the length of reinforcing as shown in the structural earth wall working drawings and, for walls with geogrid reinforcing, in accordance with Section 2-12.3. Prior to wall construction, the foundation, if not in rock, shall be compacted as accepted by the Engineer.

6-13.3(6) Welded Wire Faced Structural Earth Wall Erection

The first two sentences are revised to read:

The Contractor shall erect the welded wire wall reinforcement in accordance with the wall manufacturer's field construction manual. Construction geotextile for wall facing shall be placed between the backfill material within the reinforced zone and the coarse granular material immediately behind the welded wire wall facing, as shown in the Plans and the structural earth wall working drawings.

6-13.3(7) Backfill

The third paragraph is revised to read:

Misalignment or distortion of the precast concrete facing panels or concrete blocks due to placement of backfill outside the limits of this specification shall be corrected in a manner acceptable to the Engineer.

In item number 4 of the fifth paragraph, the phrase "as approved by the Engineer" is deleted.

The last paragraph is deleted.

6-13.3(8) Guardrail Placement

In the first sentence of the second paragraph, "approval" is revised to read "permission".

6-13.3(9) SEW Traffic Barrier and SEW Pedestrian Barrier

The first paragraph (up until the colon) is revised to read:

The Contractor, in conjunction with the structural earth wall manufacturer, shall design and detail the SEW traffic barrier and SEW pedestrian barrier in accordance with Section 6-

INFORMATIONAL COPY ONLY, NOT FOR BIDDING PURPOSES

12.3(2) and the above ground geometry details shown in the Plans. The barrier Working Drawings and supporting calculations shall be Type 2E and shall include, at a minimum, the following:

Section 8-01, Erosion Control and Water Pollution Control
January 5, 2015

8-01.2 Materials
This section is supplemented with the following new paragraph:

For all seed the Contractor shall furnish the Engineer with the following documentation:

1. The state or provincial seed dealer license and endorsements.

2. Copies of Washington State Department of Agriculture (WSDA) test results on each lot of seed. Test results must be within six months prior to the date of application.

8-01.3(2)A Preparation for Application
This section's content is deleted and replaced with the following two new subsections:

8-01.3(2)A1 Seeding
Areas to be cultivated are shown in the Plans or specified in the Special Provisions. The areas shall be cultivated to the depths specified to provide a reasonably firm but friable seedbed. Cultivation shall take place no sooner than 2 weeks prior to seeding.

All areas to be seeded, including excavated slopes shall be compacted and prepared unless otherwise specified or ordered by the Engineer. A cleated roller, crawler tractor, or similar equipment that forms longitudinal depressions at least 2 inches deep shall be used for compaction and preparation of the surface to be seeded.

The entire area shall be uniformly covered with longitudinal depressions formed perpendicular to the natural flow of water on the slope. The soil shall be conditioned with sufficient water so the longitudinal depressions remain in the soil surface until completion of the seeding.

Prior to seeding, the finished grade of the soil shall be 1 inch below the top of all curbs, junction and valve boxes, walks, driveways, and other Structures. The soil shall be in a weed free and bare condition.

All bags of seed shall be brought to the site in sealed bags and shall have seed labels attached showing the seed meets the Specifications. Seed which has become wet, moldy, or otherwise damaged in transit or storage will not be accepted.

8-01.3(2)A2 Temporary Seeding
A cleated roller, crawler tractor, or similar equipment that forms longitudinal depressions at least 2 inches deep shall be used for compaction and preparation of the surface to be seeded. The entire area shall be uniformly covered with longitudinal depressions formed perpendicular to the natural flow of water on the slope. The soil shall be conditioned with sufficient water so the longitudinal depressions remain in the soil surface until completion of the seeding.

INFORMATIONAL COPY ONLY, NOT FOR BIDDING PURPOSES

8-01.3(2)B Seeding and Fertilizing

In the list in the second paragraph, item numbers 1-5 are revised to read:

1. A hydro seeder that utilizes water as the carrying agent, and maintains continuous agitation through paddle blades. It shall have an operating capacity sufficient to agitate, suspend, and mix into a homogeneous slurry the specified amount of seed and water or other material. Distribution and discharge lines shall be large enough to prevent stoppage and shall be equipped with a set of hydraulic discharge spray nozzles that will provide a uniform distribution of the slurry.

2. Blower equipment with an adjustable disseminating device capable of maintaining a constant, measured rate of material discharge that will ensure an even distribution of seed at the rates specified.

3. Helicopters properly equipped for aerial seeding.

4. Power-drawn drills or seeders.

5. Areas in which the above methods are impractical may be seeded by hand methods.

8-01.3(2)C Liming

This section including title is deleted in its entirety and replaced with the following:

8-01.3(2)C Vacant

8-01.3(2)D Mulching

The first sentence of the second paragraph is revised to read:

Distribution of straw mulch material shall be by means that utilizes forced air to blow mulch material on seeded areas.

8-01.3(11) Outlet Protection

In the last sentence, "Section 9-13.6" is revised to read "Section 9-13.1(5)".

8-01.4 Measurement

In the twelfth paragraph, "liming" is deleted.

8-01.5 Payment

The bid item "Liming", per acre is deleted.

Section 8-02, Roadside Restoration
January 5, 2015

8-02.3(1) Responsibility During Construction

The last sentence of the second paragraph is revised to read:

This Work shall include keeping the planted and seeded areas free from insect infestation, weeds or unwanted vegetation, litter, and other debris along with retaining the finished grades and mulch in a neat uniform condition.

8-02.3(2) Roadside Work Plan

This section's title is revised to read:

INFORMATIONAL COPY ONLY, NOT FOR BIDDING PURPOSES

Work Plans

This section's content is deleted in its entirety and replaced with the following new subsections:

8-02.3(2)A Roadside Work Plan

Before starting any Work that disturbs the earth and as described in Sections 8-01, 8-02 and 8-03, the Contractor shall submit a roadside work plan. The roadside work plan shall be submitted as a Type 1 Working Drawing and shall define the Work necessary to provide all Contract requirements, including: wetland excavation, soil preparation, habitat structure placement, planting area preparation, seeding area preparation, bark mulch and compost placement, seeding, planting, plant replacement, irrigation, and weed control in narrative form.

The Roadside Work Plan shall also include a copy of the approved progress schedule.

8-02.3(2)B Weed and Pest Control Plan

The Weed and Pest Control Plan shall be submitted as a Type 1 Working Drawing. The weed and pest control plan shall include scheduling and methods of all control measures required under the Contract or proposed by the Contractor including soil preparation methods to meet the required soil surface conditions in the planting, bark mulch, and wetland areas. The weed control plan shall show general weed control including hand, mechanical and chemical methods, timing, application of herbicides including type, rate, use and timing, mowing, and noxious weed control. Target weeds and unwanted vegetation to be removed shall be identified and listed in the weed control plan.

The plan shall be prepared and signed by a licensed Commercial Pest Control Operator or Consultant when chemical pesticides are proposed. The plan shall include methods of weed control; dates of weed control operations; and the name, application rate, and Material Safety Data Sheets of all proposed herbicides. In addition, the Contractor shall furnish the Engineer with a copy of the current product label for each pesticide and spray adjuvant to be used. These product labels shall be submitted with the weed control plan for approval.

8-02.3(2)C Plant Establishment Plan

The Plant Establishment Plan shall be prepared in accordance with the requirements of Section 8-02.3(13) and submitted as a Type 1 Working Drawing. The Plan shall show the proposed scheduling of activities, materials, equipment to be utilized for the first-year plant establishment, and an emergency contact person. The Plan shall include the management of the irrigation system, when applicable. Should the plan become unworkable at any time during the first-year plant establishment, the Contractor shall submit a revised plan prior to proceeding with further Work.

8-02.3(3) Weed and Pest Control

This section is supplemented with the following new paragraph:

Grass, including grass applied in accordance with Section 8-01, growing within the mulch ring of a plant shall be considered a weed and be controlled on the project in accordance with the weed and pest control plan.

8-02.3(4) Topsoil

The last sentence of the first paragraph is revised to read:

INFORMATIONAL COPY ONLY, NOT FOR BIDDING PURPOSES

After the topsoil has been spread, all large clods, hard lumps, and rocks 2 inches in diameter and larger, and litter shall be raked up, removed, and disposed of by the Contractor.

The following new paragraph is inserted after the first paragraph:

Topsoil stockpiled for project use shall be protected to prevent erosion and weed growth. Weed growth on topsoil stockpile sites shall be immediately eliminated in accordance with the approved Weed and Pest Control Plan.

8-02.3(4)C Topsoil Type C

The last sentence is revised to read:

Topsoil Type C shall meet the requirements of Sections 8-02.3(4), 8-02.3(4)B, and 9-14.1(3).

8-02.3(12) Completion of Initial Planting

Item number 4 in the last paragraph is deleted.

8-02.3(13) Plant Establishment

The first sentence of the second paragraph is deleted.

The second paragraph is supplemented with the following new sentence:

The 1 calendar year shall be extended an amount equal to any periods where the Contractor does not comply with the plant establishment plan.

The first sentence of the fourth paragraph is revised to read:

During the first year of plant establishment under PSIPE (Plant Selection Including Plant Establishment), the Contractor shall meet monthly with the Engineer for the purpose of joint inspection of the planting material on a mutually agreed upon schedule.

The last two paragraphs are deleted.

8-02.4 Measurement

This section is supplemented with the following:

Plant selection will be measured per each.

PSIPE __ (Plant Selection Including Plant Establishment) will be measured per each.

8-02.5 Payment

The paragraph following the bid item "Topsoil Type ____", per acre is revised to read:

The unit Contract price per acre for "Topsoil Type ____" shall be full payment for all costs for the specified Work.

The bid item "PSIPE ___", per each and the paragraph following the bid item are revised to read:

"PSIPE ___", per each.

INFORMATIONAL COPY ONLY, NOT FOR BIDDING PURPOSES

The unit Contract price for "Plant Selection ___", per each, and "PSIPE ___", per each, shall be full pay for all Work necessary for weed control within the planting area, planting area preparation, fine grading, planting, cultivating, plant storage and protection, fertilizer and root dip, staking, cleanup, and water necessary to complete planting operations as specified to the end of first year plant establishment.

The bid item "Plant Establishment - ____ Year" is deleted.

Section 8-04, Curbs, Gutters, and Spillways
January 5, 2015

8-04.2 Materials

The referenced section for the following item is revised to read:

Hand Placed Riprap 9-13.1(4)

8-04.3(1) Cement Concrete Curbs, Gutters, and Spillways

The first sentence in the fourth paragraph is revised to read:

Expansion joints in the curb or curb and gutter shall be spaced as shown in the Plans, and placed at the beginning and ends of curb returns, drainage Structures, bridges, and cold joints with existing curbs and gutters.

In the third sentence of the fourth paragraph, "¼-inch" is revised to read "⅜-inch".

8-04.3(1)A Extruded Cement Concrete Curb

The second sentence in the second paragraph is revised to read:

Cement concrete curbs shall be anchored to the existing pavement by placing steel reinforcing bars 1 foot on each side of every joint.

The third paragraph is revised to read:

Steel reinforcing bars shall meet the dimensions shown in the Standard Plans.

Section 8-11, Guardrail
April 7, 2014

8-11.3(1) Beam Guardrail

After the below Amendments to 8-11.3(1)F and 8-11.3(1)G are applied, this section is supplemented with the following new sub-section:

8-11.3(1)F Removing and Resetting Beam Guardrail

The Contractor shall remove and reset existing guardrail posts, rail element, hardware and blocks to the location shown in the Plans. The mounting height of reset rail element shall be at the height shown in the Plans. The void caused by the removal of the post shall be backfilled and compacted.

INFORMATIONAL COPY ONLY, NOT FOR BIDDING PURPOSES

The Contractor shall remove and replace any existing guardrail posts and blocks that are not suited for re-use, as staked by the Engineer. The void caused by the removal of the post shall be backfilled and compacted. The Contractor shall then furnish and install a new guardrail post to provide the necessary mounting height.

8-11.3(1)A Erection of Posts

The second paragraph in this section is deleted.

8-11.3(1)C Terminal and Anchor Installation

The last sentence in the last paragraph is deleted.

8-11.3(1)F Plans

This section number is revised to:

8-11.3(1)G

8-11.3(1)G Guardrail Construction Exposed to Traffic

This section number is revised to:

8-11.3(1)H

Section 9-01, Portland Cement
January 5, 2015

9-01.2(3) Low Alkali Cement

This section is revised to read:

When low alkali portland cement is required, the percentage of alkalies in the cement shall not exceed 0.60 percent by weight calculated as Na_20 plus 0.658 K_20. This limitation shall apply to all types of portland cement.

9-01.2(4) Blended Hydraulic Cement

The first paragraph is revised to read:

Blended hydraulic cement shall be either Type IP(X)(MS) or Type IS(X)(MS) cement conforming to AASHTO M 240 or ASTM C 595, except that the portland cement used to produce blended hydraulic cement shall not contain more than 0.75 percent alkalies by weight calculated as Na_20 plus 0.658 K_20 and shall meet the following additional requirements:

1. Type IP(X)(MS) - Portland-Pozzolan Cement where (X) equals the targeted percentage of fly ash, the fly ash is limited to a maximum of 35 percent by weight of the cementitious material; (MS) indicates moderate sulfate resistance.

2. Type IS(X)(MS) - Portland Blast- Furnace Slag Cement, where: (X) equals the targeted percentage of ground granulated blast-furnace slag, the ground granulated blast furnace slag is limited to a maximum of 50 percent by weight of the cementitious material; (MS) indicates moderate sulfate resistance.

The first sentence of the second paragraph is revised to read:

INFORMATIONAL COPY ONLY, NOT FOR BIDDING PURPOSES

The source and weight of the fly ash or ground granulated blast-furnace slag shall be certified on the cement mill test report or cement certificate of analysis and shall be reported as a percent by weight of the total cementitious material.

9-01.3 Tests and Acceptance

The first paragraph is revised to read:

Cement may be accepted by the Engineer based on the cement mill test report number or cement certificate of analysis number indicating full conformance to the Specifications. All shipments of the cement to the Contractor or concrete supplier shall identify the applicable cement mill test report number or cement certificate of analysis number and shall be provided by the Contractor or concrete supplier with all concrete deliveries.

The second paragraph is revised to read:

Cement producers/suppliers that certify portland cement or blended cement shall participate in the Cement Acceptance Program as described in WSDOT Standard Practice QC 1.

9-01.4 Storage on the Work Site

This section is revised to read:

At the request of the Engineer, the Contractor shall provide test data to show that cement stored on site for longer than 60 days meets the requirements of 9-01. Tests shall be conducted on samples taken from the site in the presence of the Engineer. Test results that meet the requirements of 9-01 shall be valid for 60 days from the date of sampling, after which the Engineer may require further testing.

Section 9-03, Aggregates
August 4, 2014

9-03.1(2)C Use of Substandard Gradings

This section including title is deleted in its entirety and replaced with the following:

Vacant

9-03.1(4)C Grading

In the second paragraph, the first sentence is deleted.

The third paragraph is deleted.

9-03.1(5)B Grading

The last paragraph is revised to read:

The Contracting Agency may sample each aggregate component prior to introduction to the weigh batcher or as otherwise determined by the Engineer. Each component will be sieve analyzed separately in accordance with WSDOT FOP for WAQTC/AASHTO Test Method T-27/11. All aggregate components will be mathematically re-combined by the proportions (percent of total aggregate by weight) provided by the Contractor on Concrete Mix Design Form 350-040.

INFORMATIONAL COPY ONLY, NOT FOR BIDDING PURPOSES

9-03.8(1) General Requirements

The first paragraph up until the colon is revised to read:

Preliminary testing of aggregates for source approval shall meet the following test requirements:

The list in the first paragraph is supplemented with the following:

Sand Equivalent 45 min.

The following new paragraph is inserted after the first paragraph:

Aggregate sources that have 100 percent of the mineral material passing the No. 4 sieve shall be limited to no more than 5 percent of the total weight of aggregate.

9-03.14(3) Common Borrow

This section is revised to read:

Material for common borrow shall consist of granular or nongranular soil and/or aggregate which is free of deleterious material. Deleterious material includes wood, organic waste, coal, charcoal, or any other extraneous or objectionable material. The material shall not contain more than 3 percent organic material by weight. The plasticity index shall be determined using test method AASHTO T 89 and AASHTO T 90.

The material shall meet one of the options in the soil plasticity table below.

Soil Plasticity Table

Option	Sieve	Percent Passing	Plasticity Index
1	No. 200	0 - 12	N/A
2	No. 200	12.1 - 35	6 or Less
3	No. 200	Above 35	0

All percentages are by weight.

If requested by the Contractor, the plasticity index may be increased with the approval of the Engineer.

9-03.14(4) Gravel Borrow for Structural Earth Wall

In the second table, the row beginning with "pH" is revised to read:

pH	WSDOT Test Method T 417	4.5 - 9	5 – 10

INFORMATIONAL COPY ONLY, NOT FOR BIDDING PURPOSES

Section 9-07, Reinforcing Steel
January 6, 2014

9-07.5(2) Corrosion Resistant Dowel Bars (for Cement Concrete Pavement)

This section's title is revised to read:

9-07.5(2) Corrosion Resistant Dowel Bars (for Cement Concrete Pavement and Cement Concrete Pavement Rehabilitation)

Section 9-08, Paints and Related Materials
January 5, 2015

9-08.1(2)H Top Coat, Single Component, Moisture-Cured Polyurethane

The second paragraph is revised to read:

Color and Gloss: As specified in the Plans or Special Provisions

The last item in the requirements list is revised to read:

The top coat shall be a gloss or semi-gloss

9-08.1(8) Standard Colors

The second paragraph is deleted.

The third paragraph is revised to read:

Unless otherwise specified, all top or finish coats shall be gloss or semi-gloss, with the paint falling within the range of greater than 70 for gloss and 35 to 70 for semi-gloss on the 60-degree gloss meter.

Section 9-09, Timber and Lumber
January 6, 2014

9-09.3(1) General Requirements

The fourth paragraph is revised to read:

All orders of treated timber and lumber shall be accompanied by a Certificate of Treatment record. The Certificate of Treatment showing conformance to this specification and AWPA standards shall include the following information:

Name and location of the wood preserving company,
Customer identification,
Date of treatment and charge number,
Type of chemical used and amount of retention,
Treating process and identification of the Specification used,
Boring records verifying treatment penetration for timber and lumber with a nominal dimension of 6" x 6" or larger,
Description of material that was treated, and
Signature of a responsible plant official.

The fifth paragraph is deleted.

INFORMATIONAL COPY ONLY, NOT FOR BIDDING PURPOSES

The first sentence in the last paragraph is revised to read:

All timber and lumber to be used in aquatic environments, unless specified otherwise in the Contract, shall be chemically treated using Western Wood Preservers Institute Best Management Practices (BMPs).

Section 9-13, Riprap, Quarry Spalls, Slope Protection, and Rock for Erosion and Scour Protection and Rock Walls
January 5, 2015

This section's content is deleted.

9-13.1 Loose Riprap

This section's content, including title and subsections, is revised to read the following:

9-13.1 Riprap and Quarry Spalls

9-13.1(1) General

Riprap and quarry spalls shall consist of broken stone or broken concrete rubble and shall be free of rock fines, soil, or other extraneous material. Concrete rubble shall not be contaminated by foreign materials such as fibers, wood, steel, asphalt, sealant, soil, plastic and other contaminants or deleterious material. Concrete rubble that is imported to the job site will require testing and certification for toxicity characteristics per Section 9-03.21(1).

The grading of the riprap shall be determined by the Engineer by visual inspection of the load before it is dumped into place, or, if so ordered by the Engineer, by dumping individual loads on a flat surface and sorting and measuring the individual rocks contained in the load. Should the riprap contain insufficient spalls, as defined in Section 9-13.1(5), the Contractor shall furnish and place supplementary spall material.

Riprap and quarry spalls shall be free from segregation, seams, cracks, and other defects tending to destroy its resistance to weather and shall conform to the following requirements for quality.

Aggregate Property	Test Method	Requirement
Degradation Factor	WSDOT T 113	15 minimum
Los Angeles Wear, 500 Rev.	AASHTO T 96	50% maximum
Specific Gravity, SSD	AASHTO T 85	2.55 minimum

9-13.1(2) Heavy Loose Riprap

Heavy loose riprap shall meet the following requirements for grading:

	Minimum Size	Maximum Size
40% to 90%	1 ton (½ cubic yd.)	
70% to 90%	300 lbs. (2 cu. ft.)	
10% to 30%	3 inch	50 lbs. (spalls)

9-13.1(3) Light Loose Riprap

Light loose riprap shall meet the following requirements for grading:

	Size Range	Maximum Size

INFORMATIONAL COPY ONLY, NOT FOR BIDDING PURPOSES

20% to 90%	300 lbs. to 1 ton (2 cu. ft. to ½ cu. yd.)	
15% to 80%	50 lbs. to 1 ton (⅓ cu. ft. to ½ cu. yd.)	
10% to 20%	3 inch	50 lbs. (spalls)

9-13.1(4) Hand Placed Riprap

Hand placed riprap shall be as nearly rectangular as possible, 60 percent shall have a volume of not less than 1 cubic foot. No stone shall be used which is less than 6 inches thick, nor which does not extend through the wall.

9-13.1(5) Quarry Spalls

Quarry spalls shall meet the following requirements for grading:

Sieve Size	Percent Passing
8"	100
3"	40 max.
¾"	10 max.

9-13.2 Hand Placed Riprap

This section, including title, is deleted in its entirety and replaced with the following:

9-13.2 Vacant

9-13.4 Rock for Erosion Control and Scour Protection

The last sentence is revised to read:

The use of recycled materials and concrete rubble is not permitted for this application.

9-13.6 Quarry Spalls

This section, including title, is deleted in its entirety and replaced with the following:

9-13.6 Vacant

Section 9-14, Erosion Control and Roadside Planting

January 5, 2015

9.14.1 Soil

This section, including title, is revised to read:

9-14.1 Topsoil

Topsoil shall not contain any recycled material, foreign materials, or any listed Noxious and Nuisance weeds of any Class designated by authorized State or County officials. Aggregate shall not comprise more than 10% by volume of Topsoil and shall not be greater than two inches in diameter.

9-14.1(2) Topsoil Type B

The last sentence of the second paragraph is deleted.

9-14.2 Seed

This section is revised to read:

INFORMATIONAL COPY ONLY, NOT FOR BIDDING PURPOSES

Seed of the type specified shall be certified in accordance with WAC 16-302. Seed mixes shall be commercially prepared and supplied in sealed containers. The labels shall show:

(1) Common and botanical names of seed

(2) Lot number

(3) Net weight

(4) Pounds of Pure live seed (PLS) in the mix

(5) Origin of seed

All seed vendors must have a business license issued by supplier's state or provincial Department of Licensing with a "seed dealer" endorsement.

9-14.4(3) Bark or Wood Chips

This section's title is revised to read:

Bark or Wood Chip Mulch

The first paragraph is revised to read:

Bark or wood chip mulch shall be derived from fir, pine, or hemlock species. It shall not contain resin, tannin, or other compounds in quantities that would be detrimental to plant life. Sawdust shall not be used as mulch. Mulch produced from finished wood products or construction debris will not be allowed.

9-14.4(6) Gypsum

The first sentence is revised to read:

Gypsum shall consist of Calcium Sulfate ($CaSO_4 \cdot 2H_2O$) in a pelletized or granular form.

9-14.4(7) Tackifier

This section is revised to read:

Tackifiers are used as a tie-down for soil, compost, seed, and/or mulch. Tackifiers shall contain no growth or germination-inhibiting materials and shall not reduce infiltration rates. Tackifiers shall hydrate in water and readily blend with other slurry materials.

The Contractor shall provide test results documenting the tackifier meets the requirements for Acute Toxicity, Solvents, and Heavy Metals as required in Table 1 in Section 9-14.4(2). The tests shall be performed at the manufacturer's recommended application rate.

9-14.4(8) Compost

The second paragraph is revised to read:

Compost production and quality shall comply with WAC 173-350.

9-14.4(8)A Compost Submittal Requirements

Item 2 is revised to read:

INFORMATIONAL COPY ONLY, NOT FOR BIDDING PURPOSES

2. A copy of the Solid Waste Handling Permit issued to the manufacturer by the Jurisdictional Health Department in accordance with WAC 173-350 (Minimum Functional Standards for Solid Waste Handling).

9-14.6(1) Description

Item number 3 in the fourth paragraph is revised to read:

3. Live pole cuttings shall have a diameter between 2 inches and 3.5 inches. Live poles shall have no more than three branches which must be located at the top end of the pole and those branches shall be pruned back to the first bud from the main stem.

9-14.6(2) Quality

The second and third paragraphs in this section are revised to read:

All plant material shall comply with State and Federal laws with respect to inspection for plant diseases and insect infestation. Plants must meet Washington State Department of Agriculture plant quarantines and have a certificate of inspection. Plants originating in Canada must be accompanied by a phytosanitary certificate stating the plants meet USDA health requirements.

All plant material shall be purchased from a nursery licensed to sell plants in their state or province.

Section 9-15, Irrigation System
August 4, 2014

9-15.18 Detectable Marking Tape

In the second paragraph, the table is supplemented with the following new row:

Non-Potable Water	Purple

Section 9-16, Fence and Guardrail
August 4, 2014

9-16.2(1)B Wood Fence Posts and Braces

In the table, the row beginning with "ACA" is deleted.

Section 9-29, Illumination, Signal, Electrical
January 5, 2015

9-29.1 Conduit, Innerduct, and Outerduct

This section is supplemented with the following new subsection:

9-29.1(9) Repair

Manufacturer repair kits shall be used for field repair of existing conduit, innerduct and outerduct. The conduit repair kit shall be manufactured specifically for the repair of existing damaged conduit, inner duct and outer duct. The repair kit shall be prepackaged and include the split conduit and split couplings necessary to restore the damaged conduit to the original inside dimensions including a water and air tight seal.

INFORMATIONAL COPY ONLY, NOT FOR BIDDING PURPOSES

9-29.2(1)B Heavy Duty Junction Boxes

The second paragraph is revised to read:

The Heavy-Duty Junction Box steel frame, lid support and lid fabricated from steel plate and shapes shall be painted with a shop applied, inorganic zinc primer in accordance with Section 6-07.3. Ductile iron and gray iron castings shall not be painted.

The following new paragraph is inserted after the second paragraph:

The concrete used in Heavy-Duty Junction Boxes shall have a minimum compressive strength of 4,000 psi.

In the fourth paragraph (after the preceding Amendment is applied), the table is revised to read:

Materials	Requirement
Concrete	Section 6-02
Reinforcing Steel	Section 9-07
Lid	ASTM A 786 diamond plate steel, rolled from plate complying with ASTM A 572, grade 50 or ASTM A 588, and having a min. CVN toughness of 20 ft-lb at 40 degrees F. Or Ductile iron casting meeting Section 9-05.15
Frame and stiffener plates	ASTM A 572 grade 50 or ASTM A 588, both with min. CVN toughness of 20 ft-lb at 40 degrees F Or Gray iron casting meeting Section 9-05.15
Anchors (studs)	Section 9-06.15
Threaded Anchors for Gray Iron Frame	ASTM F1554 grade 55 Headed Anchor Requirements
Bolts, Studs, Nuts, Washers	ASTM F 593 or A 193, Type 304 or 316, or Stainless steel grade 302, 304, or 316 in accordance with approved shop drawings
Hinges and Locking and Latching Mechanism and associated Hardware and Bolts	In accordance with approved shop drawings
Safety Bars	In accordance with approved shop drawings

The last paragraph is revised to read:

The bearing seat and lid perimeter shall be free from burrs, dirt, and other foreign debris that would prevent solid seating. Bolts and nuts shall be liberally coated with anti-seize compound. Bolts shall be installed snug tight. The bearing seat and lid perimeter shall be machined to allow a minimum of 75 percent of the bearing areas to be seated with a tolerance of 0.0 to 0.005 inches measured with a feeler gage. The bearing area percentage will be measured for each side of the lid as it bears on the frame.

9-29.2(2) Standard Duty and Heavy-Duty Cable Vaults and Pull Boxes

This section's title is revised to read:

INFORMATIONAL COPY ONLY, NOT FOR BIDDING PURPOSES

Small Cable Vaults, Standard Duty Cable Vaults, Heavy-Duty Cable Vaults, Standard Duty Pull Boxes, and Heavy-Duty Pull Boxes

In the first paragraph, the first sentence is revised to read:

> Small, Standard Duty and Heavy-Duty Cable Vaults and Standard Duty and Heavy-Duty Pull Boxes shall be constructed as a concrete box and as a concrete lid.

9-29.2(2)A Standard Duty Cable Vaults and Pull Boxes

This section's title is revised to read:

Small Cable Vaults, Standard Duty Cable Vaults, and Standard Duty Pull Boxes

The first paragraph is revised to read:

> Small and Standard Duty Cable Vaults and Standard Duty Pull boxes shall be concrete and have a minimum load rating of 22,500 pounds and be tested in accordance with Section 9-29.2(1)C for concrete Standard Duty Junction Boxes.

In the second paragraph, the first sentence is revised to read:

> Concrete for Small and Standard Duty Cable Vaults and Standard Duty Pull Boxes shall have a minimum compressive strength of 4,000 psi.

In the third paragraph, the first sentence is revised to read:

> All Small and Standard Duty Cable Vaults and Standard Duty Pull Boxes placed in sidewalks, walkways, and shared-use paths shall have slip-resistant surfaces.

The fourth paragraph (up until the colon) is revised to read:

> Materials for Small and Standard Duty Cable Vaults and Standard Duty Pull Boxes shall conform to the following:

9-29.3 Fiber Optic Cable, Electrical Conductors, and Cable

This section is supplemented with the following new subsection:

9-29.3(3) Wire Marking Sleeves

Wire marking sleeves shall be full-circle in design, non-adhesive, printable using an indelible ink and shall fit snugly on the wire or cable. Marking sleeves shall be made from a PVC or polyolefin, and provide permanent identification for wires and cables.

9-29.3(2)A4 Location Wire

This section is revised to read:

> Location wire shall be steel core copper clad minimum size AWG 14 insulated conductor. The insulation shall be orange High Molecular Weight High Density Polyethylene (HMHDPE).

INFORMATIONAL COPY ONLY, NOT FOR BIDDING PURPOSES

Section 9-31, Elastomeric Bearing Pads
August 4, 2014

This section's title is revised to read:

Elastomeric Pads

9-31.1 Requirements

In the first paragraph, the word "bearing" is deleted from the first sentence.

In the first sentence of the second paragraph, the word "bearing" is deleted and replaced with "elastomeric".

In the last sentence of the second paragraph, the word "Bearing" is deleted and replaced with "Elastomeric".

In the third paragraph, the word "bearing" is deleted and replaced with the word "elastomeric".

Section 9-35, Temporary Traffic Control Materials
August 4, 2014

9-35.0 General Requirements

The following item is deleted from the list of temporary traffic control materials:

Barrier Drums

The last sentence of the second paragraph is revised to read:

Certification for crashworthiness according to NCHRP 350 or the Manual for Assessing Safety Hardware (MASH) will be required as described in Section 1-10.2(3).

9-35.2 Construction Signs

The first sentence is revised to read:

Construction signs shall conform to the requirements of the MUTCD and shall meet the requirements of NCHRP Report 350 for Category 2 devices or MASH.

9-35.7 Traffic Safety Drums

The third paragraph is revised to read:

Drums and light units shall meet the crashworthiness requirements of NCHRP 350 or MASH as described in Section 1-10.2(3).

9-35.8 Barrier Drums

This section including title is deleted in its entirety and replaced with the following:

9-35.8 Vacant

9-35.12 Transportable Attenuator

In the first paragraph, the fourth sentence is revised to read:

INFORMATIONAL COPY ONLY, NOT FOR BIDDING PURPOSES

The Contractor shall provide certification that the transportable attenuator complies with NCHRP 350 Test level 3 or MASH Test Level 3 requirements.

9-35.13 Tall Channelizing Devices

In the sixth paragraph, the last sentence is revised to read:

The method of attachment must ensure that the light does not separate from the device upon impact and light units shall meet the crashworthiness requirements of NCHRP 350 or MASH as described in Section 1-10.2(3).

INFORMATIONAL COPY ONLY, NOT FOR BIDDING PURPOSES

SPECIAL PROVISIONS

The following Special Provisions are made a part of this contract and supersede any conflicting provisions of the 2014 Standard Specifications for Road, Bridge, and Municipal Construction, and the foregoing Amendments to the Standard Specifications.

Several types of Special Provisions are included in this contract; General, Region, Bridges and Structures, and Project Specific. Special Provisions types are differentiated as follows:

(date)	General Special Provision
(******)	Notes a revision to a General Special Provision and also notes a Project Specific Special Provision.
(Regions[1] date)	Region Special Provision
(BSP date)	Bridges and Structures Special Provision

General Special Provisions are similar to Standard Specifications in that they typically apply to many projects, usually in more than one Region. Usually, the only difference from one project to another is the inclusion of variable project data, inserted as a "fill-in".

Region Special Provisions are commonly applicable within the designated Region. Region designations are as follows:

Regions[1]	
ER	Eastern Region
NCR	North Central Region
NWR	Northwest Region
OR	Olympic Region
SCR	South Central Region
SWR	Southwest Region
WSF	Washington State Ferries Division

Bridges and Structures Special Provisions are similar to Standard Specifications in that they typically apply to many projects, usually in more than one Region. Usually, the only difference from one project to another is the inclusion of variable project data, inserted as a "fill-in".

Project Specific Special Provisions normally appear only in the contract for which they were developed.

DIVISION 1 GENERAL REQUIREMENTS

DESCRIPTION OF WORK

(******)

This contract provides for the replacement of an existing bridge on a county road in Grant County, WA, and includes removal of the existing bridge, providing a temporary bridge, roadway excavation, embankment compaction, crushed surfacing base course, top course, concrete class 4000 for abutment footings and walls, superstructure for

INFORMATIONAL COPY ONLY, NOT FOR BIDDING PURPOSES

Bridge #399, beam guardrail, and other work all in accordance with the attached Contract Plans, these Contract Provisions and the Standard Specifications.

DEFINITIONS AND TERMS

1-01.3 Definitions

(March 8, 2013 APWA GSP)

Delete the heading **Completion Dates** and the three paragraphs that follow it, and replace them with the following:

Dates

Bid Opening Date
The date on which the Contracting Agency publicly opens and reads the Bids.

Award Date
The date of the formal decision of the Contracting Agency to accept the lowest responsible and responsive Bidder for the Work.

Contract Execution Date
The date the Contracting Agency officially binds the Agency to the Contract.

Notice to Proceed Date
The date stated in the Notice to Proceed on which the Contract time begins.

Substantial Completion Date
The day the Engineer determines the Contracting Agency has full and unrestricted use and benefit of the facilities, both from the operational and safety standpoint, any remaining traffic disruptions will be rare and brief, and only minor incidental work, replacement of temporary substitute facilities, plant establishment periods, or correction or repair remains for the Physical Completion of the total Contract.

Physical Completion Date
The day all of the Work is physically completed on the project. All documentation required by the Contract and required by law does not necessarily need to be furnished by the Contractor by this date.

Completion Date
The day all the Work specified in the Contract is completed and all the obligations of the Contractor under the contract are fulfilled by the Contractor. All documentation required by the Contract and required by law must be furnished by the Contractor before establishment of this date.

Final Acceptance Date
The date on which the Contracting Agency accepts the Work as complete.

Supplement this Section with the following:

All references in the Standard Specifications, Amendments, or WSDOT General Special Provisions, to the terms "State", "Department of Transportation", "Washington State Transportation Commission", "Commission", "Secretary of Transportation", "Secretary", "Headquarters", and "State Treasurer" shall be revised to read "Contracting Agency".

All references to "State Materials Laboratory" shall be revised to read "Contracting Agency designated location".

INFORMATIONAL COPY ONLY - NOT FOR BIDDING PURPOSES

All references to "final contract voucher certification" shall be interpreted to mean the final payment form established by the Contracting Agency.

The venue of all causes of action arising from the advertisement, award, execution, and performance of the contract shall be in the Superior Court of the County where the Contracting Agency's headquarters are located.

Additive
A supplemental unit of work or group of bid items, identified separately in the Bid Proposal, which may, at the discretion of the Contracting Agency, be awarded in addition to the base bid.

Alternate
One of two or more units of work or groups of bid items, identified separately in the Bid Proposal, from which the Contracting Agency may make a choice between different methods or material of construction for performing the same work.

Business Day
A business day is any day from Monday through Friday except holidays as listed in Section 1-08.5.

Contract Bond
The definition in the Standard Specifications for "Contract Bond" applies to whatever bond form(s) are required by the Contract Documents, which may be a combination of a Payment Bond and a Performance Bond.

Contract Documents
See definition for "Contract".

Contract Time
The period of time established by the terms and conditions of the Contract within which the Work must be physically completed.

Notice of Award
The written notice from the Contracting Agency to the successful Bidder signifying the Contracting Agency's acceptance of the Bid Proposal.

Notice to Proceed
The written notice from the Contracting Agency or Engineer to the Contractor authorizing and directing the Contractor to proceed with the Work and establishing the date on which the Contract time begins.

Traffic
Both vehicular and non-vehicular traffic, such as pedestrians, bicyclists, wheelchairs, and equestrian traffic.

BID PROCEDURES AND CONDITIONS

1-02.1 Prequalification of Bidders

Delete this Section and replace it with the following:

INFORMATIONAL COPY ONLY, NOT FOR BIDDING PURPOSES

1-02.1 Qualifications of Bidder

(******)
Bidders must meet the minimum qualifications of RCW 39.04.350(1), as amended:

Before award of a public works contract, a bidder must meet the following responsibility criteria to be considered a responsible bidder and qualified to be awarded a public works project. The bidder must:

(a) At the time of bid submittal, have a certificate of registration in compliance with chapter 18.27 RCW;
(b) Have a current state unified business identifier number;
(c) If applicable, have industrial insurance coverage for the bidder's employees working in Washington as required in Title 51 RCW; an employment security department number as required in Title 50 RCW; and a state excise tax registration number as required in Title 82 RCW; and
(d) Not be disqualified from bidding on any public works contract under RCW 39.06.010 or 39.12.065(3).
(e) Bidders shall be qualified by experience, financing, equipment, and organization to do the work called for in the Contract Documents. The Contracting Agency reserves the right to take whatever action it deems necessary to ascertain the ability of the bidder to perform the work satisfactorily. The Contracting Agency's actions may include a pre-qualification procedure prior to the bidder being furnished a proposal form on any contract, or a pre-award survey of the bidder's qualifications prior to award.

This Contract requires Work inside the Burlington Northern Santa Fe Railroad. Strict requirements, notification, and timelines associated with Work on Railroad Right of Way as outlined in these special provisions and the appendices shall be adhered to.

1-02.2 Plans and Specifications

(June 27, 2011 APWA GSP)

Delete this section and replace it with the following:

Information as to where Bid Documents can be obtained or reviewed can be found in the Call for Bids (Advertisement for Bids) for the work.

After award of the contract, plans and specifications will be issued to the Contractor at no cost as detailed below:

To Prime Contractor	No. of Sets	Basis of Distribution
Reduced plans (11" x 17")	4	Furnished automatically upon award.

INFORMATIONAL COPY ONLY, NOT FOR BIDDING PURPOSES

Contract Provisions	4	Furnished automatically upon award.
Large plans (e.g., 22" x 34")	0	Furnished only upon request.

Additional plans and Contract Provisions may be obtained by the Contractor from the source stated in the Call for Bids, at the Contractor's own expense.

1-02.4 Examination of Plans, Specifications, and Site of Work

Subsurface Information

Section 1-02.4(2) is supplemented with the following:

(******)

The soils information used for study and design of this project is made part of these provisions as Appendix A.

The Soils information includes the following:

Geotechnical report, including test hole information and depth to bedrock in locations around existing Bridge #399.

1-02.5 Proposal Forms

(June 27, 2011 APWA GSP)

Delete this section and replace it with the following:

The Proposal Form will identify the project and its location and describe the work. It will also list estimated quantities, units of measurement, the items of work, and the materials to be furnished at the unit bid prices. The bidder shall complete spaces on the proposal form that call for, but are not limited to, unit prices; extensions; summations; the total bid amount; signatures; date; and, where applicable, retail sales taxes and acknowledgment of addenda; the bidder's name, address, telephone number, and signature; the bidder's D/M/WBE commitment, if applicable; a State of Washington Contractor's Registration Number; and a Business License Number, if applicable. Bids shall be completed by typing or shall be printed in ink by hand, preferably in black ink. The required certifications are included as part of the Proposal Form.

The Contracting Agency reserves the right to arrange the proposal forms with alternates and additives, if such be to the advantage of the Contracting Agency. The bidder shall bid on all alternates and additives set forth in the Proposal Form unless otherwise specified.

1-02.6 Preparation of Proposal

(June 27, 2011 APWA GSP)

Supplement the second paragraph with the following:

INFORMATIONAL COPY ONLY, NOT FOR BIDDING PURPOSES

4. If a minimum bid amount has been established for any item, the unit or lump sum price must equal or exceed the minimum amount stated.

5. Any correction to a bid made by interlineation, alteration, or erasure, shall be initialed by the signer of the bid.

Delete the last paragraph, and replace it with the following:

The Bidder shall make no stipulation on the Bid Form, nor qualify the bid in any manner.

A bid by a corporation shall be executed in the corporate name, by the president or a vice president (or other corporate officer accompanied by evidence of authority to sign).

A bid by a partnership shall be executed in the partnership name, and signed by a partner. A copy of the partnership agreement shall be submitted with the Bid Form if any D/M/WBE requirements are to be satisfied through such an agreement.
A bid by a joint venture shall be executed in the joint venture name and signed by a member of the joint venture. A copy of the joint venture agreement shall be submitted with the Bid Form if any D/W/MBE requirements are to be satisfied through such an agreement.

(August 2, 2004)
The fifth and sixth paragraphs of Section 1-02.6 are deleted.

1-02.7 Bid Deposit

(March 8, 2013 APWA GSP)

Supplement this section with the following:

Bid bonds shall contain the following:

1. Contracting Agency-assigned number for the project;
2. Name of the project;
3. The Contracting Agency named as obligee;
4. The amount of the bid bond stated either as a dollar figure or as a percentage which represents five percent of the maximum bid amount that could be awarded;
5. Signature of the bidder's officer empowered to sign official statements. The signature of the person authorized to submit the bid should agree with the signature on the bond, and the title of the person must accompany the said signature;
6. The signature of the surety's officer empowered to sign the bond and the power of attorney.

If so stated in the Contract Provisions, bidder must use the bond form included in the Contract Provisions.

If so stated in the Contract Provisions, cash will not be accepted for a bid deposit.

1-02.9 Delivery of Proposal

(August 15, 2012 APWA GSP, Option A)

Delete this section and replace it with the following:

INFORMATIONAL COPY ONLY, NOT FOR BIDDING PURPOSES

Each proposal shall be submitted in a sealed envelope, with the Project Name and Project Number as stated in the Call for Bids clearly marked on the outside of the envelope, or as otherwise required in the Bid Documents, to ensure proper handling and delivery.

If the project has FHWA funding and requires DBE Written Confirmation Documents or Good Faith Effort Documentation, then to be considered responsive, the Bidder shall submit with their Bid Proposal, written Confirmation Documentation from each DBE firm listed on the Bidder's completed DBE Utilization Certification, form 272-056A EF, as required by Section 1-02.6.

The Contracting Agency will not open or consider any Bid Proposal that is received after the time specified in the Call for Bids for receipt of Bid Proposals, or received in a location other than that specified in the Call for Bids.

Public Opening Of Proposals

Section 1-02.12 is supplemented with the following:

(******)

Date Of Opening Bids

Sealed bids are to be received at the following location prior to the time specified:

The Office of the Board of County Commissioners, Grant County Courthouse, Room 207, 35 C St. NW, P.O. Box 37, Ephrata, WA 98823

The bid opening date for this project is **April 14, 2015**. Bids received will be publicly opened and read after **1:30 P.M.** Pacific Time on this date.

1-02.13 Irregular Proposals

(March 13, 2012 APWA GSP)

Revise item 1 to read:

1. A proposal will be considered irregular and will be rejected if:
   a. The Bidder is not prequalified when so required;
   b. The authorized proposal form furnished by the Contracting Agency is not used or is altered;
   c. The completed proposal form contains any unauthorized additions, deletions, alternate Bids, or conditions;
   d. The Bidder adds provisions reserving the right to reject or accept the award, or enter into the Contract;
   e. A price per unit cannot be determined from the Bid Proposal;
   f. The Proposal form is not properly executed;
   g. The Bidder fails to submit or properly complete a Subcontractor list, if applicable, as required in Section 1-02.6;
   h. The Bidder fails to submit or properly complete a Disadvantaged Business Enterprise Certification, if applicable, as required in Section 1-02.6;
   i. The Bidder fails to submit written confirmation from each DBE firm listed on the Bidder's completed DBE Utilization Certification that they are in agreement with the bidders DBE participation commitment, if applicable, as required in Section 1-02.6, or if the written confirmation that is submitted fails to meet the requirements of the Special Provisions;

INFORMATIONAL COPY ONLY, NOT FOR BIDDING PURPOSES

j The Bidder fails to submit DBE Good Faith Effort documentation, if applicable, as required in Section 1-02.6, or if the documentation that is submitted fails to demonstrate that a Good Faith Effort to meet the Condition of Award was made;

k. The Bid Proposal does not constitute a definite and unqualified offer to meet the material terms of the Bid invitation; or

l. More than one proposal is submitted for the same project from a Bidder under the same or different names.

AWARD AND EXECUTION OF CONTRACT

1-03.3 Execution of Contract

(October 1, 2005 APWA GSP)

Revise this section to read:

Copies of the Contract Provisions, including the unsigned Form of Contract, will be available for signature by the successful bidder on the first business day following award. The number of copies to be executed by the Contractor will be determined by the Contracting Agency.

Within **10 (ten) calendar days** after the award date, the successful bidder shall return the signed Contracting Agency-prepared contract, an insurance certification as required by Section 1-07.18, and a satisfactory bond as required by law and Section 1-03.4. Before execution of the contract by the Contracting Agency, the successful bidder shall provide any pre-award information the Contracting Agency may require under Section 1-02.15.

Until the Contracting Agency executes a contract, no proposal shall bind the Contracting Agency nor shall any work begin within the project limits or within Contracting Agency-furnished sites. The Contractor shall bear all risks for any work begun outside such areas and for any materials ordered before the contract is executed by the Contracting Agency.

If the bidder experiences circumstances beyond their control that prevents return of the contract documents within the calendar days after the award date stated above, the Contracting Agency may grant up to a maximum of 5 (five) additional calendar days for return of the documents, provided the Contracting Agency deems the circumstances warrant it.

1-03.4 Contract Bond

(October 1, 2005 APWA GSP)

Revise the first paragraph to read:

The successful bidder shall provide an executed contract bond for the full contract amount. This contract bond shall:

1. Be on a Contracting Agency-furnished form;
2. Be signed by an approved surety (or sureties) that:
   a. Is registered with the Washington State Insurance Commissioner, and
   b. Appears on the current Authorized Insurance List in the State of Washington published by the Office of the Insurance Commissioner,
3. Be conditioned upon the faithful performance of the contract by the Contractor within the prescribed time;

INFORMATIONAL COPY ONLY, NOT FOR BIDDING PURPOSES

4. Guarantee that the surety shall indemnify, defend, and protect the Contracting Agency against any claim of direct or indirect loss resulting from the failure:
   a. Of the Contractor (or any of the employees, subcontractors, or lower tier subcontractors of the Contractor) to faithfully perform the contract, or
   b. Of the Contractor (or the subcontractors or lower tier subcontractors of the Contractor) to pay all laborers, mechanics, subcontractors, lower tier subcontractors, materialperson, or any other person who provides supplies or provisions for carrying out the work;
5. Be accompanied by a power of attorney for the Surety's officer empowered to sign the bond; and
6. Be signed by an officer of the Contractor empowered to sign official statements (sole proprietor or partner). If the Contractor is a corporation, the bond must be signed by the president or vice-president, unless accompanied by written proof of the authority of the individual signing the bond to bind the corporation (i.e., corporate resolution, power of attorney or a letter to such effect by the president or vice-president).

SCOPE OF THE WORK

1-04.2 Coordination of Contract Documents, Plans, Special Provisions, Specifications, and Addenda

(March 13, 2012 APWA GSP)

Revise the second paragraph to read:

Any inconsistency in the parts of the contract shall be resolved by following this order of precedence (e.g., 1 presiding over 2, 2 over 3, 3 over 4, and so forth):

1. Addenda,
2. Proposal Form,
3. Special Provisions (Including Appendices),
4. Contract Plans,
5. Amendments to the Standard Specifications,
6. Standard Specifications,
7. Contracting Agency's Standard Plans or Details (if any), and
8. WSDOT Standard Plans for Road, Bridge, and Municipal Construction.

CONTROL OF WORK

1-05.3 Plans and Working Drawings

Section 1-05.3 is supplemented with the following:

(August 2, 2004)
When submittals require review by the railroad, the Engineer will require up to 60 calendar days from the date the submittals are received until they are returned to the Contractor. If a submittal is returned unapproved and then resubmitted, then an additional review time of up to 60 calendar days will be required.

If more than 60 calendar days are required for the Engineer's review of any individual submittal or resubmittal, an extension of time will be considered in accordance with Section 1-08.8.

INFORMATIONAL COPY ONLY, NOT FOR BIDDING PURPOSES

1-05.7 Removal of Defective and Unauthorized Work

(October 1, 2005 APWA GSP)

Supplement this section with the following:

If the Contractor fails to remedy defective or unauthorized work within the time specified in a written notice from the Engineer, or fails to perform any part of the work required by the Contract Documents, the Engineer may correct and remedy such work as may be identified in the written notice, with Contracting Agency forces or by such other means as the Contracting Agency may deem necessary.

If the Contractor fails to comply with a written order to remedy what the Engineer determines to be an emergency situation, the Engineer may have the defective and unauthorized work corrected immediately, have the rejected work removed and replaced, or have work the Contractor refuses to perform completed by using Contracting Agency or other forces. An emergency situation is any situation when, in the opinion of the Engineer, a delay in its remedy could be potentially unsafe, or might cause serious risk of loss or damage to the public.

Direct or indirect costs incurred by the Contracting Agency attributable to correcting and remedying defective or unauthorized work, or work the Contractor failed or refused to perform, shall be paid by the Contractor. Payment will be deducted by the Engineer from monies due, or to become due, the Contractor. Such direct and indirect costs shall include in particular, but without limitation, compensation for additional professional services required, and costs for repair and replacement of work of others destroyed or damaged by correction, removal, or replacement of the Contractor's unauthorized work.

No adjustment in contract time or compensation will be allowed because of the delay in the performance of the work attributable to the exercise of the Contracting Agency's rights provided by this Section.

The rights exercised under the provisions of this section shall not diminish the Contracting Agency's right to pursue any other avenue for additional remedy or damages with respect to the Contractor's failure to perform the work as required.

1-05.11 Final Inspection

Delete this section and replace it with the following:

1-05.11 Final Inspections and Operational Testing

(October 1, 2005 APWA GSP)

1-05.11(1) Substantial Completion Date

When the Contractor considers the work to be substantially complete, the Contractor shall so notify the Engineer and request the Engineer establish the Substantial Completion Date. The Contractor's request shall list the specific items of work that remain to be completed in order to reach physical completion. The Engineer will schedule an inspection of the work with the Contractor to determine the status of completion. The Engineer may also establish the Substantial Completion Date unilaterally.

If, after this inspection, the Engineer concurs with the Contractor that the work is substantially complete and ready for its intended use, the Engineer, by written notice to the Contractor, will set the Substantial Completion Date. If, after this inspection the Engineer

INFORMATIONAL COPY ONLY, NOT FOR BIDDING PURPOSES

does not consider the work substantially complete and ready for its intended use, the Engineer will, by written notice, so notify the Contractor giving the reasons therefor.

Upon receipt of written notice concurring in or denying substantial completion, whichever is applicable, the Contractor shall pursue vigorously, diligently and without unauthorized interruption, the work necessary to reach Substantial and Physical Completion. The Contractor shall provide the Engineer with a revised schedule indicating when the Contractor expects to reach substantial and physical completion of the work.

The above process shall be repeated until the Engineer establishes the Substantial Completion Date and the Contractor considers the work physically complete and ready for final inspection.

1-05.11(2) Final Inspection and Physical Completion Date

When the Contractor considers the work physically complete and ready for final inspection, the Contractor by written notice, shall request the Engineer to schedule a final inspection. The Engineer will set a date for final inspection. The Engineer and the Contractor will then make a final inspection and the Engineer will notify the Contractor in writing of all particulars in which the final inspection reveals the work incomplete or unacceptable. The Contractor shall immediately take such corrective measures as are necessary to remedy the listed deficiencies. Corrective work shall be pursued vigorously, diligently, and without interruption until physical completion of the listed deficiencies. This process will continue until the Engineer is satisfied the listed deficiencies have been corrected.

If action to correct the listed deficiencies is not initiated within 7 days after receipt of the written notice listing the deficiencies, the Engineer may, upon written notice to the Contractor, take whatever steps are necessary to correct those deficiencies pursuant to Section 1-05.7.
The Contractor will not be allowed an extension of contract time because of a delay in the performance of the work attributable to the exercise of the Engineer's right hereunder.

Upon correction of all deficiencies, the Engineer will notify the Contractor and the Contracting Agency, in writing, of the date upon which the work was considered physically complete. That date shall constitute the Physical Completion Date of the contract, but shall not imply acceptance of the work or that all the obligations of the Contractor under the contract have been fulfilled.

1-05.11(3) Operational Testing

It is the intent of the Contracting Agency to have at the Physical Completion Date a complete and operable system. Therefore when the work involves the installation of machinery or other mechanical equipment; street lighting, electrical distribution or signal systems; irrigation systems; buildings; or other similar work it may be desirable for the Engineer to have the Contractor operate and test the work for a period of time after final inspection but prior to the physical completion date. Whenever items of work are listed in the Contract Provisions for operational testing they shall be fully tested under operating conditions for the time period specified to ensure their acceptability prior to the Physical Completion Date. During and following the test period, the Contractor shall correct any items of workmanship, materials, or equipment which prove faulty, or that are not in first class operating condition. Equipment, electrical controls, meters, or other devices and equipment to be tested during this period shall be tested under the observation of the Engineer, so that the Engineer may determine their suitability for the purpose for which they were installed.

INFORMATIONAL COPY ONLY, NOT FOR BIDDING PURPOSES

The Physical Completion Date cannot be established until testing and corrections have been completed to the satisfaction of the Engineer.

The costs for power, gas, labor, material, supplies, and everything else needed to successfully complete operational testing, shall be included in the unit contract prices related to the system being tested, unless specifically set forth otherwise in the proposal.

Operational and test periods, when required by the Engineer, shall not affect a manufacturer's guaranties or warranties furnished under the terms of the contract.

Superintendents, Labor and Equipment of Contractor

Revise the seventh paragraph of Section 1-05.13 to read:

(******)
Whenever the Contracting Agency evaluates the Contractor's qualifications pursuant to Section 1-02.1 and 1-02.14, it will take these performance reports into account.

Cooperation With Other Contractors

Section 1-05.14 is supplemented with the following:

(March 13, 1995)
Other Contracts Or Other Work
It is anticipated that the following work adjacent to or within the limits of this project will be performed by others during the course of this project and will require coordination of the work:

1. Utility relocations and/or normal maintenance work by telephone and power companies.
2. Normal maintenance work by Grant County Road crews.

1-05.15 Method of Serving Notices

(March 25, 2009 APWA GSP)

Revise the second paragraph to read:

All correspondence from the Contractor shall be directed to the Project Engineer. All correspondence from the Contractor constituting any notification, notice of protest, notice of dispute, or other correspondence constituting notification required to be furnished under the Contract, must be in paper format, hand delivered or sent via mail delivery service to the Project Engineer's office. Electronic copies such as e-mails or electronically delivered copies of correspondence will not constitute such notice and will not comply with the requirements of the Contract.

Add the following new section:

1-05.16 Water and Power

(October 1, 2005 APWA GSP)

The Contractor shall make necessary arrangements, and shall bear the costs for power and water necessary for the performance of the work, unless the contract includes power and water as a pay item.

INFORMATIONAL COPY ONLY, NOT FOR BIDDING PURPOSES

1-05.17 Oral Agreements

(October 1, 2005 AWPA GSP)

No oral agreement or conversation with any officer, agent, or employee of the Contracting Agency, either before or after execution of the contract, shall affect or modify any of the terms or obligations contained in any of the documents comprising the contract. Such oral agreement or conversation shall be considered as unofficial information and in no way binding upon the Contracting Agency, unless subsequently put in writing and signed by the Contracting Agency.

CONTROL OF MATERIAL

Section 1-06 is supplemented with the following:

Buy America

(August 6, 2012)

In accordance with Buy America requirements contained in 23 CFR 635.410, the major quantities of steel and iron construction material that is permanently incorporated into the project shall consist of American-made materials only. Buy America does not apply to temporary steel items, e.g., temporary sheet piling, temporary bridges, steel scaffolding and falsework.

Minor amounts of foreign steel and iron may be utilized in this project provided the cost of the foreign material used does not exceed one-tenth of one percent of the total contract cost or $2,500.00, whichever is greater.

American-made material is defined as material having all manufacturing processes occurring domestically. To further define the coverage, a domestic product is a manufactured steel material that was produced in one of the 50 States, the District of Columbia, Puerto Rico, or in the territories and possessions of the United States.

If domestically produced steel billets or iron ingots are exported outside of the area of coverage, as defined above, for any manufacturing process then the resulting product does not conform to the Buy America requirements. Additionally, products manufactured domestically from foreign source steel billets or iron ingots do not conform to the Buy America requirements because the initial melting and mixing of alloys to create the material occurred in a foreign country.

Manufacturing begins with the initial melting and mixing, and continues through the coating stage. Any process which modifies the chemical content, the physical size or shape, or the final finish is considered a manufacturing process. The processes include rolling, extruding, machining, bending, grinding, drilling, welding, and coating. The action of applying a coating to steel or iron is deemed a manufacturing process. Coating includes epoxy coating, galvanizing, aluminizing, painting, and any other coating that protects or enhances the value of steel or iron. Any process from the original reduction from ore to the finished product constitutes a manufacturing process for iron.

Due to a nationwide waiver, Buy America does not apply to raw materials (iron ore and alloys), scrap (recycled steel or iron), and pig iron or processed, pelletized, and reduced iron ore.

The following are considered to be steel manufacturing processes:

INFORMATIONAL COPY ONLY NOT FOR BIDDING PURPOSES

1. Production of steel by any of the following processes:

    a. Open hearth furnace.

    b. Basic oxygen.

    c. Electric furnace.

    d. Direct reduction.

2. Rolling, heat treating, and any other similar processing.

3. Fabrication of the products.06051.GR1 2

    a. Spinning wire into cable or strand.

    b. Corrugating and rolling into culverts.

    c. Shop fabrication.

A certification of materials origin will be required for any items comprised of, or containing, steel or iron construction materials prior to such items being incorporated into the permanent work. The certification shall be on DOT Form 350-109EF provided by the Engineer, or such other form the Contractor chooses, provided it contains the same information as DOT Form 350-109EF.

LEGAL RELATIONS AND RESPONSIBILITIES TO THE PUBLIC

1-07.1 Laws to be Observed

(October 1, 2005 APWA GSP)

Supplement this section with the following:

In cases of conflict between different safety regulations, the more stringent regulation shall apply.

The Washington State Department of Labor and Industries shall be the sole and paramount administrative agency responsible for the administration of the provisions of the Washington Industrial Safety and Health Act of 1973 (WISHA).

The Contractor shall maintain at the project site office, or other well known place at the project site, all articles necessary for providing first aid to the injured. The Contractor shall establish, publish, and make known to all employees, procedures for ensuring immediate removal to a hospital, or doctor's care, persons, including employees, who may have been injured on the project site. Employees should not be permitted to work on the project site before the Contractor has established and made known procedures for removal of injured persons to a hospital or a doctor's care.

The Contractor shall have sole responsibility for the safety, efficiency, and adequacy of the Contractor's plant, appliances, and methods, and for any damage or injury resulting from their failure, or improper maintenance, use, or operation. The Contractor shall be solely and completely responsible for the conditions of the project site, including safety for all persons and property in the performance of the work. This requirement shall apply continuously, and

INFORMATIONAL COPY ONLY, NOT FOR BIDDING PURPOSES

not be limited to normal working hours. The required or implied duty of the Engineer to conduct construction review of the Contractor's performance does not, and shall not, be intended to include review and adequacy of the Contractor's safety measures in, on, or near the project site.

1-07.2 State Taxes

Delete this section, including its sub-sections, in its entirety and replace it with the following:

1-07.2 State Sales Tax
(June 27, 2011 APWA GSP)

The Washington State Department of Revenue has issued special rules on the State sales tax. Sections 1-07.2(1) through 1-07.2(3) are meant to clarify those rules. The Contractor should contact the Washington State Department of Revenue for answers to questions in this area. The Contracting Agency will not adjust its payment if the Contractor bases a bid on a misunderstood tax liability.

The Contractor shall include all Contractor-paid taxes in the unit bid prices or other contract amounts. In some cases, however, state retail sales tax will not be included. Section 1-07.2(2) describes this exception.

The Contracting Agency will pay the retained percentage (or release the Contract Bond if a FHWA-funded Project) only if the Contractor has obtained from the Washington State Department of Revenue a certificate showing that all contract-related taxes have been paid (RCW 60.28.051). The Contracting Agency may deduct from its payments to the Contractor any amount the Contractor may owe the Washington State Department of Revenue, whether the amount owed relates to this contract or not. Any amount so deducted will be paid into the proper State fund.

1-07.2(1) State Sales Tax — Rule 171

WAC 458-20-171, and its related rules, apply to building, repairing, or improving streets, roads, etc., which are owned by a municipal corporation, or political subdivision of the state, or by the United States, and which are used primarily for foot or vehicular traffic. This includes storm or combined sewer systems within and included as a part of the street or road drainage system and power lines when such are part of the roadway lighting system. For work performed in such cases, the Contractor shall include Washington State Retail Sales Taxes in the various unit bid item prices, or other contract amounts, including those that the Contractor pays on the purchase of the materials, equipment, or supplies used or consumed in doing the work.

1-07.2(2) State Sales Tax — Rule 170

WAC 458-20-170, and its related rules, apply to the constructing and repairing of new or existing buildings, or other structures, upon real property. This includes, but is not limited to, the construction of streets, roads, highways, etc., owned by the state of Washington; water mains and their appurtenances; sanitary sewers and sewage disposal systems unless such sewers and disposal systems are within, and a part of, a street or road drainage system; telephone, telegraph, electrical power distribution lines, or other conduits or lines in or above streets or roads, unless such power lines become a part of a street or road lighting system; and installing or attaching of any article of tangible personal property in or to real property, whether or not such personal property becomes a part of the realty by virtue of installation.

INFORMATIONAL COPY ONLY / NOT FOR BIDDING PURPOSES

For work performed in such cases, the Contractor shall collect from the Contracting Agency, retail sales tax on the full contract price. The Contracting Agency will automatically add this sales tax to each payment to the Contractor. For this reason, the Contractor shall not include the retail sales tax in the unit bid item prices, or in any other contract amount subject to Rule 170, with the following exception.

Exception: The Contracting Agency will not add in sales tax for a payment the Contractor or a subcontractor makes on the purchase or rental of tools, machinery, equipment, or consumable supplies not integrated into the project. Such sales taxes shall be included in the unit bid item prices or in any other contract amount.

1-07.2(3) Services

The Contractor shall not collect retail sales tax from the Contracting Agency on any contract wholly for professional or other services (as defined in Washington State Department of Revenue Rules 138 and 244).

1-07.7 Load Limits

Section 1-07.7 is supplemented with the following:

(March 13, 1995)
Whenever the Contractor obtains materials from a source other than that provided by the Contracting Agency, or provides a source for materials not designated to come from a source provided by the State and the location of the source necessitates hauling on other than State Highways, the Contractor shall, at the Contractor's expense, make all arrangements for the use of the haul routes.

1-07.9 Wages

General
Section 1-07.9(1) is supplemented with the following:

(January 3, 2014)
The Federal wage rates incorporated in this contract have been established by the Secretary of Labor under United States Department of Labor General Decision No. WA140001.

The State rates incorporated in this contract are applicable to all construction activities associated with this contract.

Requirements for Nondiscrimination

Section 1-07.11 is supplemented with the following:

(August 5, 2013)
Requirement for Affirmative Action to Ensure Equal Employment Opportunity (Executive Order 11246)

INFORMATIONAL COPY ONLY - NOT FOR BIDDING PURPOSES

1. The Contractor's attention is called to the Equal Opportunity Clause and the Standard Federal Equal Employment Opportunity Construction Contract Specifications set forth herein.

2. The goals and timetables for minority and female participation set by the Office of Federal Contract Compliance Programs, expressed in percentage terms for the Contractor's aggregate work force in each construction craft and in each trade on all construction work in the covered area, are as follows:

Women - Statewide

Timetable	Goal
Until further notice	6.9%

Minorities - by Standard Metropolitan Statistical Area (SMSA)

Spokane, WA:
SMSA Counties:
Spokane, WA 2.8
WA Spokane.
Non-SMSA Counties 3.0
WA Adams; WA Asotin; WA Columbia; WA Ferry; WA Garfield; WA Lincoln, WA Pend Oreille; WA Stevens; WA Whitman.

Richland, WA
SMSA Counties:
Richland Kennewick, WA 5.4
WA Benton; WA Franklin.
Non-SMSA Counties 3.6
WA Walla Walla.

Yakima, WA:
SMSA Counties:
Yakima, WA 9.7
WA Yakima.
Non-SMSA Counties 7.2
WA Chelan; WA Douglas; WA Grant; WA Kittitas; WA Okanogan.

Seattle, WA:
SMSA Counties:
Seattle Everett, WA 7.2
WA King; WA Snohomish.
Tacoma, WA 6.2
WA Pierce.
Non-SMSA Counties 6.1
WA Clallam; WA Grays Harbor; WA Island; WA Jefferson; WA Kitsap; WA Lewis; WA Mason; WA Pacific; WA San Juan; WA Skagit; WA Thurston; WA Whatcom.

INFORMATIONAL COPY ONLY, NOT FOR BIDDING PURPOSES

Portland, OR:
SMSA Counties:
Portland, OR-WA 4.5
WA Clark.
Non-SMSA Counties 3.8
WA Cowlitz; WA Klickitat; WA Skamania; WA Wahkiakum.

These goals are applicable to each nonexempt Contractor's total on-site construction workforce, regardless of whether or not part of that workforce is performing work on a Federal, or federally assisted project, contract, or subcontract until further notice. Compliance with these goals and time tables is enforced by the Office of Federal Contract compliance Programs.

The Contractor's compliance with the Executive Order and the regulations in 41 CFR Part 60-4 shall be based on its implementation of the Equal Opportunity Clause, specific affirmative action obligations required by the specifications set forth in 41 CFR 60-4.3(a), and its efforts to meet the goals. The hours of minority and female employment and training must be substantially uniform throughout the length of the contract, in each construction craft and in each trade, and the Contractor shall make a good faith effort to employ minorities and women evenly on each of its projects. The transfer of minority or female employees or trainees from Contractor to Contractor or from project to project for the sole purpose of meeting the Contractor's goal shall be a violation of the contract, the Executive Order and the regulations in 41 CFR Part 60-4. Compliance with the goals will be measured against the total work hours performed.

3. The Contractor shall provide written notification to the Office of Federal Contract Compliance Programs (OFCCP) within 10 working days of award of any construction subcontract in excess of $10,000 or more that are Federally funded, at any tier for construction work under the contract resulting from this solicitation. The notification shall list the name, address and telephone number of the Subcontractor; employer identification number of the Subcontractor; estimated dollar amount of the subcontract; estimated starting and completion dates of the subcontract; and the geographical area in which the contract is to be performed. The notification shall be sent to:

U.S. Department of Labor
Office of Federal Contract Compliance Programs Pacific Region
Attn: Regional Director
San Francisco Federal Building
90 – 7th Street, Suite 18-300
San Francisco, CA 94103(415) 625-7800 Phone
(415) 625-7799 Fax

Additional information may be found at the U.S. Department of Labor website: http://www.dol.gov/ofccp/TAguides/ctaguide.htm

4. As used in this Notice, and in the contract resulting from this solicitation, the Covered Area is as designated herein.

Standard Federal Equal Employment Opportunity Construction Contract Specifications (Executive Order 11246)

1. As used in these specifications:

INFORMATIONAL COPY ONLY NOT FOR BIDDING PURPOSES

a. Covered Area means the geographical area described in the solicitation from which this contract resulted;

b. Director means Director, Office of Federal Contract Compliance Programs, United States Department of Labor, or any person to whom the Director delegates authority;

c. Employer Identification Number means the Federal Social Security number used on the Employer's Quarterly Federal Tax Return, U. S. Treasury Department Form 941;

d. Minority includes:

(1) Black, a person having origins in any of the Black Racial Groups of Africa.

(2) Hispanic, a fluent Spanish speaking, Spanish surnamed person of Mexican, Puerto Rican, Cuban, Central American, South American, or other Spanish origin.

(3) Asian or Pacific Islander, a person having origins in any of the original peoples of the Pacific rim or the Pacific Islands, the Hawaiian Islands and Samoa.

(4) American Indian or Alaskan Native, a person having origins in any of the original peoples of North America, and who maintain cultural identification through tribal affiliation or community recognition.

2. Whenever the Contractor, or any Subcontractor at any tier, subcontracts a portion of the work involving any construction trade, it shall physically include in each subcontract in excess of $10,000 the provisions of these specifications and the Notice which contains the applicable goals for minority and female participation and which is set forth in the solicitations from which this contract resulted.

3. If the Contractor is participating (pursuant to 41 CFR 60-4.5) in a Hometown Plan approved by the U.S. Department of Labor in the covered area either individually or through an association, its affirmative action obligations on all work in the Plan area (including goals and timetables) shall be in accordance with that Plan for those trades which have unions participating in the Plan. Contractors must be able to demonstrate their participation in and compliance with the provisions of any such Hometown Plan. Each Contractor or Subcontractor participating in an approved Plan is individually required to comply with its obligations under the EEO clause, and to make a good faith effort to achieve each goal under the Plan in each trade in which it has employees. The overall good faith performance by other Contractors or Subcontractors toward a goal in an approved Plan does not excuse any covered Contractor's or Subcontractor's failure to take good faith effort to achieve the Plan goals and timetables.

4. The Contractor shall implement the specific affirmative action standards provided in paragraphs 7a through 7p of this Special Provision. The goals set forth in the solicitation from which this contract resulted are expressed as percentages of the total hours of employment and training of minority and female utilization the Contractor should reasonably be able to achieve in each construction trade in which it has employees in the covered area. Covered construction contractors performing construction work in geographical areas where they do not have a Federal or federally

INFORMATIONAL COPY ONLY NOT FOR BIDDING PURPOSES

assisted construction contract shall apply the minority and female goals established for the geographical area where the work is being performed. The Contractor is expected to make substantially uniform progress in meeting its goals in each craft during the period specified.

5. Neither the provisions of any collective bargaining agreement, nor the failure by a union with whom the Contractor has a collective bargaining agreement, to refer either minorities or women shall excuse the Contractor's obligations under these specifications, Executive Order 11246, or the regulations promulgated pursuant thereto.

6. In order for the nonworking training hours of apprentices and trainees to be counted in meeting the goals, such apprentices and trainees must be employed by the Contractor during the training period, and the Contractor must have made a commitment to employ the apprentices and trainees at the completion of their training, subject to the availability of employment opportunities. Trainees must be trained pursuant to training programs approved by the U.S. Department of Labor.

7. The Contractor shall take specific affirmative actions to ensure equal employment opportunity. The evaluation of the Contractor's compliance with these specifications shall be based upon its effort to achieve maximum results from its action. The Contractor shall document these efforts fully, and shall implement affirmative action steps at least as extensive as the following:

    a. Ensure and maintain a working environment free of harassment, intimidation, and coercion at all sites, and in all facilities at which the Contractor's employees are assigned to work. The Contractor, where possible, will assign two or more women to each construction project. The Contractor shall specifically ensure that all foremen, superintendents, and other on-site supervisory personnel are aware of and carry out the Contractor's obligation to maintain such a working environment, with specific attention to minority or female individuals working at such sites or in such facilities.

    b. Establish and maintain a current list of minority and female recruitment sources, provide written notification to minority and female recruitment sources and to community organizations when the Contractor or its unions have employment opportunities available, and maintain a record of the organizations' responses.

    c. Maintain a current file of the names, addresses and telephone numbers of each minority and female off-the-street applicant and minority or female referral from a union, a recruitment source or community organization and of what action was taken with respect to each such individual. If such individual was sent to the union hiring hall for referral and was not referred back to the Contractor by the union or, if referred, not employed by the Contractor, this shall be documented in the file with the reason therefor, along with whatever additional actions the Contractor may have taken.

    d. Provide immediate written notification to the Director when the union or unions with which the Contractor has a collective bargaining agreement has not referred to the Contractor a minority person or woman sent by the Contractor, or when the Contractor has other information that the union referral process has impeded the Contractor's efforts to meet its obligations.

INFORMATIONAL COPY ONLY, NOT FOR BIDDING PURPOSES

e. Develop on-the-job training opportunity and/or participate in training programs for the area which expressly include minorities and women, including upgrading programs and apprenticeship and trainee programs relevant to the Contractor's employment needs, especially those programs funded or approved by the U.S. Department of Labor. The Contractor shall provide notice of these programs to the sources compiled under 7b above.

f. Disseminate the Contractor's EEO policy by providing notice of the policy to unions and training programs and requesting their cooperation in assisting the Contractor in meeting its EEO obligations; by including it in any policy manual and collective bargaining agreement; by publicizing it in the company newspaper, annual report, etc.; by specific review of the policy with all management personnel and with all minority and female employees at least once a year; and by posting the company EEO policy on bulletin boards accessible to all employees at each location where construction work is performed.

g. Review, at least annually, the company's EEO policy and affirmative action obligations under these specifications with all employees having any responsibility for hiring, assignment, layoff, termination or other employment decisions including specific review of these items with on-site supervisory personnel such as Superintendents, General Foremen, etc., prior to the initiation of construction work at any job site. A written record shall be made and maintained identifying the time and place of these meetings, persons attending, subject matter discussed, and disposition of the subject matter.

h. Disseminate the Contractor's EEO policy externally by including it in any advertising in the news media, specifically including minority and female news media, and providing written notification to and discussing the Contractor's EEO policy with other Contractors and Subcontractors with whom the Contractor does or anticipates doing business.

i. Direct its recruitment efforts, both oral and written to minority, female and community organizations, to schools with minority and female students and to minority and female recruitment and training organizations serving the Contractor's recruitment area and employment needs. Not later than one month prior to the date for the acceptance of applications for apprenticeship or other training by any recruitment source, the Contractor shall send written notification to organizations such as the above, describing the openings, screening procedures, and tests to be used in the selection process.

j. Encourage present minority and female employees to recruit other minority persons and women and where reasonable, provide after school, summer and vacation employment to minority and female youth both on the site and in other areas of a Contractor's work force.

k. Validate all tests and other selection requirements where there is an obligation to do so under 41 CFR Part 60-3.

l. Conduct, at least annually, an inventory and evaluation of all minority and female personnel for promotional opportunities and encourage these employees to seek or to prepare for, through appropriate training, etc., such opportunities.

INFORMATIONAL COPY ONLY NOT FOR BIDDING PURPOSES

m. Ensure that seniority practices, job classifications, work assignments and other personnel practices, do not have a discriminatory effect by continually monitoring all personnel and employment related activities to ensure that the EEO policy and the Contractor's obligations under these specifications are being carried out.

n. Ensure that all facilities and company activities are nonsegregated except that separate or single-user toilet and necessary changing facilities shall be provided to assure privacy between the sexes.

o. Document and maintain a record of all solicitations of offers for subcontracts from minority and female construction contractors and suppliers, including circulation of solicitations to minority and female contractor associations and other business associations.

p. Conduct a review, at least annually, of all supervisors' adherence to and performance under the Contractor's EEO policies and affirmative action obligations.

8. Contractors are encouraged to participate in voluntary associations which assist in fulfilling one or more of their affirmative action obligations (7a through 7p). The efforts of a contractor association, joint contractor-union, contractor-community, or other similar group of which the Contractor is a member and participant, may be asserted as fulfilling any one or more of the obligations under 7a through 7p of this Special Provision provided that the Contractor actively participates in the group, makes every effort to assure that the group has a positive impact on the employment of minorities and women in the industry, ensure that the concrete benefits of the program are reflected in the Contractor's minority and female work-force participation, makes a good faith effort to meet its individual goals and timetables, and can provide access to documentation which demonstrate the effectiveness of actions taken on behalf of the Contractor. The obligation to comply, however, is the Contractor's and failure of such a group to fulfill an obligation shall not be a defense for the Contractor's noncompliance.

9. A single goal for minorities and a separate single goal for women have been established. The Contractor, however, is required to provide equal employment opportunity and to take affirmative action for all minority groups, both male and female, and all women, both minority and non-minority. Consequently, the Contractor may be in violation of the Executive Order if a particular group is employed in substantially disparate manner (for example, even though the Contractor has achieved its goals for women generally, the Contractor may be in violation of the Executive Order if a specific minority group of women is underutilized).

10. The Contractor shall not use the goals and timetables or affirmative action standards to discriminate against any person because of race, color, religion, sex, or national origin.

11. The Contractor shall not enter into any subcontract with any person or firm debarred from Government contracts pursuant to Executive Order 11246.

12. The Contractor shall carry out such sanctions and penalties for violation of these specifications and of the Equal Opportunity Clause, including suspensions, terminations and cancellations of existing subcontracts as may be imposed or ordered pursuant to Executive Order 11246, as amended, and its implementing regulations by the Office of Federal Contract Compliance Programs. Any Contractor who fails to

INFORMATIONAL COPY ONLY - NOT FOR BIDDING PURPOSES

carry out such sanctions and penalties shall be in violation of these specifications and Executive Order 11246, as amended.

13. The Contractor, in fulfilling its obligations under these specifications, shall implement specific affirmative action steps, at least as extensive as those standards prescribed in paragraph 7 of this Special Provision, so as to achieve maximum results from its efforts to ensure equal employment opportunity. If the Contractor fails to comply with the requirements of the Executive Order, the implementing regulations, or these specifications, the Director shall proceed in accordance with 41 CFR 60-4.8.

14. The Contractor shall designate a responsible official to monitor all employment related activity to ensure that the company EEO policy is being carried out, to submit reports relating to the provisions hereof as may be required by the government and to keep records. Records shall at least include, for each employee, their name, address, telephone numbers, construction trade, union affiliation if any, employee identification number when assigned, social security number, race, sex, status (e.g., mechanic, apprentice, trainee, helper, or laborer), dates of changes in status, hours worked per week in the indicated trade, rate of pay, and locations at which the work was performed. Records shall be maintained in an easily understandable and retrievable form; however, to the degree that existing records satisfy this requirement, the Contractors will not be required to maintain separate records.

15. Nothing herein provided shall be construed as a limitation upon the application of other laws which establish different standards of compliance or upon the application of requirements for the hiring of local or other area residents (e.g., those under the Public Works Employment Act of 1977 and the Community Development Block Grant Program).

16. Additional assistance for Federal Construction Contractors on contracts administered by Washington State Department of Transportation or by Local Agencies may be found at:

    Washington State Dept. of Transportation
    Office of Equal Opportunity
    PO Box 47314
    310 Maple Park Ave. SE
    Olympia WA
    98504-7314
    Ph: 360-705-7090
    Fax: 360-705-6801
    http://www.wsdot.wa.gov/equalopportunity/default.htm

(May 7, 2012)

Disadvantaged Business Enterprise Participation

The Disadvantaged Business Enterprise (DBE) requirements of 49 CFR Part 26 apply to this Contract. As such, the requirements of this Contract are to make affirmative efforts to solicit DBEs, provide information on who submitted a Bid or quote and to report DBE participation quarterly as described elsewhere in these Contract Provisions. No preference will be included in the evaluation of Bids/Proposals, no minimum level of DBE participation shall be required as a Condition of Award and Bids/Proposals may not be rejected or considered non-responsive on that basis.

INFORMATIONAL COPY ONLY, NOT FOR BIDDING PURPOSES

DBE Goals
No DBE goals have been assigned as part of this Contract.

Affirmative Efforts to Solicit DBE Participation
DBE firms shall have an equal opportunity to compete for subcontracts in which the Contractor enters into pursuant to this Contract.

Contractors are encouraged to:

1. Advertise opportunities for Subcontractors or suppliers in a timely and reasonably designed manner to provide notice of the opportunity to DBEs capable of performing the Work. All advertisements should include a Contract Provision encouraging participation by DBE firms. This may be accomplished through general advertisements (e.g. newspapers, journals, etc.) or by soliciting Bids/Proposals directly from DBEs.

   Note: A Directory of Certified DBE Firms denoting the Description of Work the DBE Contractors are certified to perform is available at:

   www.omwbe.wa.gov/certification/index.shtml.

   The directory provides a plain language on the Description of Work that the listed DBE's have been certified by the Office of Minority and Women's Business Enterprises (OMWBE) to perform.

2. Establish delivery schedules that encourage participation by DBEs and other small businesses.

3. Participate with a DBE as a joint venture.

DBE Eligibility/Selection of DBEs for Reporting Purposes Only
Contractors may take credit for DBEs utilized on this Contract only if the firm is certified for the Work being performed.

Absent a mandatory goal, all DBE participation that is attained on this project will be considered as "race neutral" participation and shall be reported as such.

Crediting DBE Participation for Reporting Purposes

Joint Venture
When a DBE performs as a participant in a joint venture, only that portion of the total dollar value of the Contract equal to the distinct, clearly defined portion of the Work that the DBE performs with its own forces shall be credited.

DBE Prime Contractor
A DBE Prime Contractor may only take credit for that portion of the total dollar value of the Contract equal to the distinct, clearly defined portion of the Work that the DBE Prime Contractor performs with its own forces.

INFORMATIONAL COPY ONLY NOT FOR BIDDING PURPOSES

DBE Subcontractor

When a DBE firm participates as a Subcontractor, only that portion of the total dollar value of the Contract equal to the distinct, clearly defined portion of the Work that the DBE performs with its own forces shall be credited.

- Include the cost of supplies and materials obtained by the DBE for the Work in the Contract including supplies purchased or equipment leased by the DBE. However, you may not take credit supplies, materials, and equipment the DBE Subcontractor purchases or leases from the Prime Contractor or its affiliate. In addition, Work performed by a DBE, utilizing resources of the Prime Contractor or its affiliates shall not be credited.

- In very rare situations, a DBE firm may utilize equipment and/or personnel from a non-DBE firm other than the Prime Contractor or its affiliates. Should this situation arise the arrangement must be short-term and have prior written approval from the Office of Equal Opportunity (OEO). The arrangement must not impact a DBE firm's ability to perform a Commercially Useful Function (CUF).

- Count the entire value of fees or commissions charged by a DBE firm for providing a bona fide service, such as professional, technical, consultant, managerial services, or for providing bonds or insurance.

- When a DBE subcontracts to another firm, the value of the subcontracted Work may be counted as participation only if the DBE's lower tier Subcontractor is also a DBE.

- When non-DBE Subcontractor further subcontracts to a lower-tier Subcontractor or supplier who is a certified DBE, then that portion of the Work further subcontracted may be credited as DBE participation, so long as it is a distinct clearly defined portion of the Work that the DBE is performing with its own forces.
- If a firm is not certified as a DBE at the time of the execution of the contract, their participation cannot be counted toward any DBE goals.

Trucking

Use the following factors in determining DBE credit and whether a DBE trucking company is performing a Commercially Useful Function (CUF):

1. The DBE must be responsible for the management and supervision of the entire trucking operation for which credit is being claimed.

2. The DBE must itself own and, with its own workforce, operate at least one fully licensed, insured, and operational truck used on the Contract.

3. The DBE receives credit only for the value of the transportation services it provides on the Contract using trucks it owns or leases, licenses, insures, and operates with drivers it employs. For purposes of this requirement a lease must indicate that the DBE has exclusive use of and control over the truck. This does not preclude the leased truck from working for others provided it is with the consent of the DBE and the

INFORMATIONAL COPY ONLY NOT FOR BIDDING PURPOSES

lease provides the DBE first priority for use of the leased truck. Leased trucks must display the name and identification number of the DBE.

4. The DBE may lease trucks from another DBE firm including an owner-operator provided they are certified as a DBE for trucking. The DBE who leases trucks from another DBE may claim participation for the total value of the transportation services the lessee DBE provides on the Contract.

5. The DBE may also lease trucks from a non-DBE firm and may enter into an agreement with an owner-operator who is a non-DBE. The DBE shall only receive credit for the number of additional non-DBE trucks equal or less than the number of DBE trucks the firms owns or has leased/subcontracted through another DBE trucking company. The DBE must control the work of the non-DBE trucks. If the non-DBE is performing the Work without supervision of that Work by the DBE, the DBE is not performing a Commercially Useful Function (CUF).

6. In any lease or owner-operator situation, as described in requirement #4 and #5 above, the following rules shall apply:

    a. A written lease/rental agreement is required for all trucks leased or rented; documenting the ownership and the terms of the agreement. The agreements must be submitted and approved by the Contracting Agency prior to the beginning of the Work. The agreement must show the leaser's name, truck description and agreed upon amount and method of payment (hour, ton, or per load). All lease agreements shall be for a long-term relationship, rather than for the individual project. (This requirement does not apply to owner-operator arrangements.)

    b. Only the vehicle, (not the operator) may be leased or rented. (This requirement does not apply to owner-operator arrangements.)

7. Credit may only be claimed for DBE trucking firms operating under a subcontract or a written agreement approved by the Contracting Agency prior to performing Work.

Expenditures paid to other DBEs

Expenditures paid to other DBEs for materials or supplies may be counted toward DBE goals as provided in the following:

Manufacturer

You may claim DBE credit for 100 percent of value of the materials or supplies obtained from a DBE manufacturer.

A manufacturer is a firm that operates or maintains a factory or establishment that produces, on the premises, the materials, supplies, articles, or equipment required under the contract. A manufacturer shall include firms that produce finished goods or products from raw or unfinished material or that purchases

INFORMATIONAL COPY ONLY NOT FOR BIDDING PURPOSES

and substantially alters goods and materials to make them suitable for construction use before reselling them.

In order to receive credit as a DBE Manufacturer, the firm must be certified by OMWBE as a manufacturer in a NAICS code that falls within the 31XXXX to 33XXXX classification.

Regular Dealer

You may claim credit for 60 percent of the value of the materials or supplies purchased from a DBE regular dealer. Rules applicable to regular dealer status are contained in 49 CFR Part 26.55.e.2.

To be considered a regular dealer you must meet the following criteria:

1. WSDOT considers and recognizes a regular dealer, as a firm that owns, operates, or maintains a store, warehouse, or other establishment in which the materials or supplies required for the performance of the Contract and described by the specifications of the Contract are bought, kept in stock and regularly sold or leased to the public in the usual course of business.

2. Sixty percent (60%) of the cost of materials or supplies purchased from an approved regular dealer may be credited as DBE participation.

Regular dealer status is granted on a contract-by-contract basis. A firm wishing to be approved as a regular dealer for WSDOT contracted projects or Highways & Local Program administered projects must submit a request in writing to the OEO no later than seven days prior to bid opening.
Once the OEO has received the request, an onsite review will be set up with the firm and a review conducted to determine the firm's qualifications. If it is determined that the firm qualifies as a regular dealer the OEO will list the firm on an approved regular dealers List. The list may be accessed through the OEO Home website is at:

www.wsdot.wa.gov/equalopportunity

Note: Requests to be listed as a regular dealer will only be processed if the requesting firm is certified by the Office of Minority and Women's Business Enterprises in a NAICS code that fall within the 42XXXX NAICS Wholesale code section.

Materials or Supplies Purchased from a DBE

With regard to materials or supplies purchased from a DBE who is neither a manufacturer nor a regular dealer you may claim credit for the following:

1. Fees or commissions charged for assistance in the procurement of the materials and supplies.

INFORMATIONAL COPY ONLY NOT FOR BIDDING PURPOSES

2. Fees or transportation charges for the delivery of materials or supplies.

In either case, you may not take credit for any part of the cost of the materials and supplies.

Joint Checking Allowance

Prime Contractors and DBEs must receive pre-approval by the OEO before using a joint check. Joint check requests shall be submitted, by the Prime Contractor to the Contracting Agency for approval.

When requesting approval for use of a joint checking allowance, the Contractor must distribute a written joint check agreement among the parties (including the suppliers involved) providing full and prompt disclosure of the expected use of the joint checks. The agreement shall contain all the information concerning the parties' obligations and consequences or remedies if the agreement is not fulfilled or a breach occurs. The joint check request shall be submitted to the Contracting Agency for approval prior to signing the Contract agreement.

The following are some general conditions that must be met by all parties regarding joint check use:

a. It is understood the Prime Contractor acts as the guarantor of a joint check.

b. The DBE's own funds are used to pay supplier of materials. The Prime Contractor does not make direct payment to supplier. In order to be performing a Commercially Useful Function (CUF), the DBE must release the check to the supplier (paying for the materials it-self and not be an extra participant in a transaction).

c. If the Prime Contractor makes joint checks available to one DBE Subcontractor, the service must be made available to all Subcontractors (DBE and non-DBE).

d. The relationship between the DBE and its suppliers should be established independently of and without interference by the Prime Contractor. The DBE has final decision-making responsibility concerning the procurement of materials and supplies, including which supplier to use.

e. The Prime Contractor and DBE shall be able to provide receipts, invoices, cancelled checks and/or certification statements of payment if requested by the Contracting Agency.

f. The DBE remains responsible for all other elements of 49 CFR 26.55(c)(1).

INFORMATIONAL COPY ONLY, NOT FOR BIDDING PURPOSES

Failure by the Prime Contractor to request and to receive prior approval of a joint check arrangement will result in the joint check amount not counting towards the Prime Contractor's DBE goal.

Commercially Useful Function (CUF)
In any case, you may only take credit when the associated DBE that is determined to be performing a Commercially Useful Function (CUF).

- A DBE performs a CUF when it is responsible for execution of a distinct element of Work and is carrying out its responsibilities by performing, managing and supervising the Work involved. The DBE must also be responsible with respect to materials and supplies used on the Contract. For example; negotiating price, determining quality, determining quantities, ordering, installing (if applicable) and paying for the material itself.

- A DBE does not perform a CUF if its role is limited to that of an extra participant in a transaction, Contract, or project through which funds are passed.

Procedures Between Award and Execution
After award and prior to Execution of the Contract, the successful Bidder shall provide additional information as described below. Failure to comply may result in the forfeiture of the Bidder's Proposal bond or deposit.

A list of all firms who submitted a Bid or quote in an attempt to participate in this project whether they were successful or not.

Include the correct business name, federal employer identification number (optional) and a mailing address.

The firms identified by the Prime Contractor may be contacted by Contracting Agency to solicit general information as follows:

1. Age of the firm.

2. Average of its gross annual receipts over the past three years.

Procedures after Execution
Reporting
Quarterly Report of Amounts Credited as DBE Participation
Form #422-102
The Prime Contractor shall submit a Quarterly Report of Amounts Credited as DBE Participation form (422-102 EF) on a quarterly basis for any calendar quarter in which DBE Work is accomplished or upon completion of the project, as appropriate. This is a record of payments to the DBE that the Prime Contractor is taking credit for as DBE participation. The dollars reported as specified in Crediting DBE Participation for Reporting Purposes section of this contract provision.

INFORMATIONAL COPY ONLY NOT FOR BIDDING PURPOSES

In the event that the payments to a DBE have been made by an entity other than the Prime Contractor (as in the case of a lower-tier Subcontractor or supplier), then the Prime Contractor shall obtain the quarterly report, including the signed affidavit, from the paying entity and submit the report to the Contracting Agency.

Payment

Compensation for all costs associated with complying with the conditions of this specification shall be included in payment for the associated Contract items of Work.

Prompt Payment

Prompt payment to all Subcontractors shall be in accordance with Section 1-08.1(1) of the Contract Provisions.

Damages for Noncompliance

The Prime Contractor shall not discriminate on the basis of race, color, national origin, or sex in the performance of this Contract. The Prime Contractor shall carry out applicable requirements of 49 CFR Part 26 in the award and administration of Contracts, which contain funding assistance from the United States Department of Transportation. Failure by the Prime Contractor to carry out these requirements is a material breach of this Contract, which may result in the termination of this Contract or such other remedy as the Contracting Agency deems appropriate.

(July 1, 2013)

Small Business Enterprise Participation

The Small Business Enterprise (SBE) Program is an element of the Disadvantaged Business Enterprise (DBE) Program in accordance with the requirements of 49 CFR Part 26.39. As such, the requirements of this contract establish affirmative efforts to utilize SBE certified firms on construction projects. No preference will be included in the evaluation of Bids/Proposals. No minimum level of SBE participation shall be required as a Condition of Award and Bids/Proposals may not be rejected or considered non-responsive on that basis.

Voluntary SBE Goals

A voluntary goal amount of ten percent of the Contract bid amount is established.

The goal is voluntary, but achievement of the goal is encouraged. No preference will be included in the evaluation of bids/proposals. Bidders may contact the Washington State Office of Minority and Women's Business Enterprises (OMWBE) at 360-664-9750 or visit www.omwbe.wa.gov to obtain information on certified SBE firms.

Required SBE Participation Plan

The Contractor shall submit a SBE Participation Plan prior to commencing contract work. Although the goal is voluntary, the outreach efforts to provide SBE maximum practicable opportunities are not.

For SBE Participation Plan Drafting Guidelines, please visit:

www.wsdot.wa.gov/equalopportunity.

INFORMATIONAL COPY ONLY, NOT FOR BIDDING PURPOSES

Definitions
Regardless of race or gender, a SBE is one certified by OMWBE as such, where the firm's:

- Three year averaged gross receipts are less than $22.41 million dollars, with smaller industry standards applicable
- Is at least 51% owned and controlled by an individual or individuals with a personal net worth less than $1.32 million dollars
- A Micro Small Business Enterprise is a firm certified as an SBE with average gross receipts for three years less than one million dollars

Federal Agency Inspection

Section 1-07.12 is supplemented with the following:

(July 30, 2012)
Required Federal Aid Provisions
The Required Contract Provisions Federal Aid Construction Contracts (FHWA 1273) Revised May 1, 2012 supersede any conflicting provisions of the Standard Specifications and are made a part of this Contract; provided, however, that if any of the provisions of FHWA 1273 are less restrictive than Washington State Law, then the Washington State Law shall prevail.

The provisions of FHWA 1273 included in this Contract require that the Contractor Insert the FHWA 1273 in each Subcontract, together with the wage rates which are part of the FHWA 1273. Also, a clause shall be included in each Subcontract requiring the Subcontractors to insert the FHWA 1273 thereto in any lower tier Subcontracts, together with the wage rates. The Contractor shall also ensure that this section, REQUIRED FEDERAL AID PROVISIONS, is inserted in each Subcontract for Subcontractors and lower tier Subcontractors. For this purpose, upon request to the Project Engineer, the Contractor will be provided with extra copies of the FHWA 1273, the applicable wage rates, and this Special Provision.

1-07.13 Contractor's Responsibility for Work

General

Section 1-07.13(1) is supplemented with the following:

(******)

Staging Area

The Contractor shall not be allowed to use BNSF Right of Way as a staging area without written approval from BNSF Railway.

Repair of Damage

INFORMATIONAL COPY ONLY, NOT FOR BIDDING PURPOSES

Section 1-07.13(4) is revised to read:

(August 6, 2001)
The Contractor shall promptly repair all damage to either temporary or permanent work as directed by the Engineer. For damage qualifying for relief under Sections 1-07.13(1), 1-07.13(2), or 1-07.13(3), payment will be made in accordance with Section 1-04.4. Payment will be limited to repair of damaged work only. No payment will be made for delay or disruption of work.

1-07.16 Protection and Restoration of Property

Section 1-07.16 is supplemented with the following:

(******)
Notification

The Contractor shall distribute a special notice to each project resident before beginning work. Project resident means any person, company, or public agency having a driveway inside the project limits, within one mile of the project limits, or having a driveway or access on a dead-end road within the project limits. The special notice shall contain the following information and statements:

- Date of the notice.
- Project name, termini, and a description of the major phases of the work.
- Name of Contractor, Contractor's representative and 24 hour phone number.
- Scheduled project start and completion dates.
- Available detour routes.
- One-way traffic will be maintained during each working day.
- Two-way traffic will be restored at the end of each working day.
- All plants, trees, shrubs, gardens, sprinklers or structures within the limits of construction will be removed. Residents are to be advised to remove such property before work begins.
- Driveways will be restored to useable conditions at the end of each working day, without exception.
- Mail service interruptions or relocations. Statement that the Contractor will remove, temporarily relocate, and eventually reinstall mail receptacles. Statement that mailboxes, posts, etc., damaged by the Contractor will be replaced and installed at no charge to the resident.
- Possible problems with power, telephone, potable water, sewer, irrigation supply relocations and/or interruptions, if any.
- Temporary fencing requirements for livestock, if any.
- Residents are responsible for driveway culvert maintenance.
- Request to irrigators to eliminate water on the roadway and in the borrow ditches per Grant County Ordinance.

The Contractor must notify all affected Grant County agencies of the date and anticipated length of all road closures, including school districts, fire districts, Multi-Agency Communications Center (509) 762-1901, Sheriff's Dept. (509) 754-2011, Emergency Management (509) 762-1462, and U.S. Postal Service offices.

The Contractor must place a "Notice of Road Construction" in the legal newspaper of Grant County (Columbia Basin Herald). All notices must be provided a minimum of

INFORMATIONAL COPY ONLY, NOT FOR BIDDING PURPOSES

three (3) working days prior to beginning work. The County will not allow any work to be performed until the required notices are made by the Contractor.

(******)

Payment

The lump sum contract price for "Notification" shall be full compensation for all labor, equipment, materials, and tools necessary to perform the work outlined in this supplemental section.

1-07.17 Utilities And Similar Facilities

Section 1-07.17 is supplemented with the following:

(******)

Locations and dimensions shown in the Plans for existing facilities are in accordance with available information obtained without uncovering, measuring, or other verification.

Public and private utilities, or their Contractors, will furnish all work necessary to adjust, relocate, replace, or construct their facilities unless otherwise provided for in the Plans or these Special Provisions. Such adjustment, relocation, replacement, or construction will be done during the prosecution of the work for this project.

The Contractor shall call the Utility Location Request Center (One Call Center), for field location, not less than two nor more than ten business days before the scheduled date for commencement of excavation which may affect underground utility facilities, unless otherwise agreed upon by the parties involved. A business day is defined as any day other than Saturday, Sunday, or a legal local, State, or Federal holiday. The telephone number for the One Call Center for this project is 1-800-424-5555. If no one-number locator service is available, notice shall be provided individually to those owners known to or suspected of having underground facilities within the area of proposed excavation.

The Contractor is alerted to the existence of Chapter 19.122 RCW, a law relating to underground utilities. Any cost to the Contractor incurred as a result of this law shall be at the Contractor's expense.

No excavation shall begin until all known facilities, in the vicinity of the excavation area, have been located and marked.

The Contractor can go to the following web site to find any changes to the Washington dig law that took effect in 2013.
http://www.utc.wa.gov/publicSafety/pipelineSafety/Pages/CallBeforeYouDig-DigLaw.aspx

The Contractor shall attend a mandatory utility preconstruction meeting with the Engineer, all affected Subcontractors, and all utility owners and their Contractors prior to beginning onsite work.

The following addresses and telephone numbers of utility companies and other agencies known or suspected of having facilities within the project limits are supplied for the Contractor's convenience:

- Grant County PUD, Tom Schwiesow

INFORMATIONAL COPY ONLY. NOT FOR BIDDING PURPOSES

30 C Street SW,
Ephrata, WA 98823, (509) 754-3451 Ext. 2440

- Frontier Communication, Zeke Johnson
  320 East Penny Road
  Wenatchee, WA 98801, (509) 662-9262
  Zeke.c.johnstone@ftr.com
  Alternate Contact: Dave Holland, Construction Supervisor
  (509) 679-7958

1-07.18 Public Liability and Property Damage Insurance

Delete this section in its entirety, and replace it with the following:

1-07.18 Insurance

(January 24, 2011 APWA GSP)

1-07.18(1) General Requirements

A. The Contractor shall obtain the insurance described in this section from insurers approved by the State Insurance Commissioner pursuant to RCW Title 48. The insurance must be provided by an insurer with a rating of A-: VII or higher in the A.M. Best's Key Rating Guide, which is licensed to do business in the state of Washington (or issued as a surplus line by a Washington Surplus lines broker). The Contracting Agency reserves the right to approve or reject the insurance provided, based on the insurer (including financial condition), terms and coverage, the Certificate of Insurance, and/or endorsements.

B. The Contractor shall keep this insurance in force during the term of the Contract and for thirty (30) days after the Physical Completion date, unless otherwise indicated (see C. below).

C. If any insurance policy is written on a claims made form, its retroactive date, and that of all subsequent renewals, shall be no later than the effective date of this Contract. The policy shall state that coverage is claims made, and state the retroactive date. Claims-made form coverage shall be maintained by the Contractor for a minimum of 36 months following the Final Completion or earlier termination of this Contract, and the Contractor shall annually provide the Contracting Agency with proof of renewal. If renewal of the claims made form of coverage becomes unavailable, or economically prohibitive, the Contractor shall purchase an extended reporting period ("tail") or execute another form of guarantee acceptable to the Contracting Agency to assure financial responsibility for liability for services performed.

D. The insurance policies shall contain a "cross liability" provision.

E. The Contractor's and all subContractors' insurance coverage shall be primary and non-contributory insurance as respects the Contracting Agency's insurance, self-insurance, or insurance pool coverage.

F. The Contractor shall provide the Contracting Agency and all Additional Insureds with written notice of any policy cancellation, within two business days of their receipt of such notice.

G. Upon request, the Contractor shall forward to the Contracting Agency a full and certified copy of the insurance policy(s).

INFORMATIONAL COPY ONLY, NOT FOR BIDDING PURPOSES

H. The Contractor shall not begin work under the Contract until the required insurance has been obtained and approved by the Contracting Agency.

I. Failure on the part of the Contractor to maintain the insurance as required shall constitute a material breach of contract, upon which the Contracting Agency may, after giving five business days notice to the Contractor to correct the breach, immediately terminate the Contract or, at its discretion, procure or renew such insurance and pay any and all premiums in connection therewith, with any sums so expended to be repaid to the Contracting Agency on demand, or at the sole discretion of the Contracting Agency, offset against funds due the Contractor from the Contracting Agency.

J. All costs for insurance shall be incidental to and included in the unit or lump sum prices of the contract and no additional payment will be made.

See Exhibit C-1, *Agreement Between BNSF Railway Company and the Contractor* for specific Insurance requirements from the Railroad, which may differ from those described in this Special Provision. If any differences in coverage requirements exist, the Contractor shall be responsible for the greater coverage amount or specific item of coverage. Any requests for changes to these coverage amount(s) and/or condition(s) will be subject to approval of the Contracting Agency AND the Railroad.

1-07.18(2) Additional Insured

All insurance policies, with the exception of Professional Liability and Workers Compensation, shall name the following listed entities as additional insured(s):

- The Contracting Agency and its officers, elected officials, employees, agents, and volunteers.

The above-listed entities shall be additional insured(s) for the full available limits of liability maintained by the Contractor, whether primary, excess, contingent or otherwise, irrespective of whether such limits maintained by the Contractor are greater than those required by this Contract, and irrespective of whether the Certificate of Insurance provided by the Contractor pursuant to 1-07.18(3) describes limits lower than those maintained by the Contractor.

1-07.18(3) Subcontractors

Contractor shall ensure that each subcontractor of every tier obtains and maintains at a minimum the insurance coverages listed in 1-07.18(5)A and 1-07.18(5)B. Upon request of the Contracting Agency, the Contractor shall provide evidence of such insurance.

1-07.18(4) Evidence of Insurance

The Contractor shall deliver to the Contracting Agency a Certificate(s) of Insurance and endorsements for each policy of insurance meeting the requirements set forth herein when the Contractor delivers the signed Contract for the work. The certificate and endorsements must conform to the following requirements:

1. An ACORD certificate or a form determined by the Contracting Agency to be equivalent.
2. Copies of all endorsements naming Contracting Agency and all other entities listed in 1-07.18(2) as Additional Insured(s), showing the policy number. The Contractor may submit a copy of any blanket additional insured clause from its policies instead of a separate endorsement. A statement of additional insured status on an ACORD Certificate of Insurance shall not satisfy this requirement.

INFORMATIONAL COPY ONLY, NOT FOR BIDDING PURPOSES

3. Any other amendatory endorsements to show the coverage required herein.

1-07.18(5) Coverages and Limits

The insurance shall provide the minimum coverages and limits set forth below. Providing coverage in these stated minimum limits shall not be construed to relieve the Contractor from liability in excess of such limits. All deductibles and self-insured retentions must be disclosed and are subject to approval by the Contracting Agency. The cost of any claim payments falling within the deductible shall be the responsibility of the Contractor.

1-07.18(5)A Commercial General Liability

A policy of Commercial General Liability Insurance, including:

Per project aggregate
Premises/Operations Liability
Products/Completed Operations – for a period of one year following final acceptance of the work.
Personal/Advertising Injury
Contractual Liability
Independent Contractors Liability
Stop Gap / Employers' Liability
Explosion, Collapse, or Underground Property Damage (XCU)
Blasting (only required when the Contractor's work under this Contract includes exposures to which this specified coverage responds)

Such policy must provide the following minimum limits:

$1,000,000 Each Occurrence
$2,000,000 General Aggregate
$1,000,000 Products & Completed Operations Aggregate
$1,000,000 Personal & Advertising Injury, each offence

Stop Gap / Employers' Liability

$1,000,000 Each Accident
$1,000,000 Disease - Policy Limit
$1,000,000 Disease - Each Employee

1-07.18(5)B Automobile Liability

Automobile Liability for owned, non-owned, hired, and leased vehicles, with an MCS 90 endorsement and a CA 9948 endorsement attached if "pollutants" are to be transported. Such policy(ies) must provide the following minimum limit:

$1,000,000 combined single limit

1-07.18(5)C Workers' Compensation

The Contractor shall comply with Workers' Compensation coverage as required by the Industrial Insurance laws of the state of Washington.

Section 1-07.18 is supplemented with the following:

INFORMATIONAL COPY ONLY, NOT FOR BIDDING PURPOSES

(April 1, 2013)

Relations With Railroad

Railroad Company, as used in the following specifications, shall be the railroad company or companies, or railway company or companies specified in these Special Provisions. The following provisions, though referring to a single Railroad Company, shall be applicable to each of the following railroad companies or railway companies:

*** Burlington Northern Santa Fe Railroad (BNSF Railway) ***

Protection of Railroad Property

The Contractor shall exercise care in all operations and shall, at the Contractor's expense, protect the property of the Railroad Company and the Company's appurtenances, property in its custody, or persons lawfully upon its right of way, from damage, destruction, interference or injury caused by the Contractor's operations. The Contractor shall prosecute the work to not interfere with the Railroad Company or its appurtenances, or any of the Railroad Company's trains or facilities, and shall complete the work to a condition that shall not interfere with or menace the integrity or safe and successful operations of the Railroad Company or its appurtenances, or any of the Railroad Company's trains or facilities.

The Contractor shall not transport equipment, machinery, or materials across the Railroad Company's tracks, except at a public crossing, without the written consent of the Railroad Company.

The Contractor shall keep the right of way and ditches of the Railroad Company open and clean from any deposits or debris resulting from its operations. The Contractor shall be responsible for the cost to clean and restore ballast of the Railroad Company which is disturbed or becomes fouled with dirt or materials when such deposits or damage result from the Contractor's operations, except as provided elsewhere.

The Contractor's work shall be conducted in such a manner that there will be a minimum of interference with the operation of railroad traffic. The Railroad Company will specify what periods will be allowed the Contractor for executing any part of the work in which the Railroad Company's tracks will be obstructed or made unsafe for operation of railroad traffic.

In the event that an emergency occurs in connection with the work specified, the Railroad Company reserves the right to do any and all work that may be necessary to maintain railroad traffic. If the emergency is caused by the Contractor, the Contractor shall pay the Railroad Company for the cost of such emergency work.

Protective services to protect the Railroad Company's facilities, property, and movement of its trains or engines, including railroad flagging and other devices, may be required by the Railroad Company as a result of the Contractor's operations.

The nature and extent of protective services, personnel and other measures required will in all cases be determined by the Railroad Company. Nothing in these specifications will limit the Railroad Company's right to determine and assign the number of personnel, the classes of personnel for protective services, nor other protective measures it deems necessary.

When, in the opinion of the Railroad Company, the services of flaggers or inspectors are necessary for the protection of the Railroad Company's facilities by reason of the Contractor's operations, the Railroad Company will furnish such flaggers or inspectors as may be required. The Contractor shall notify the Railroad Company a minimum of

INFORMATIONAL COPY ONLY, NOT FOR BIDDING PURPOSES

*** 7 Calendar Days *** in advance of whenever the Contractor is about to perform work within Railroad Company property or within 25 feet of the tracks to enable the Railroad Company to provide flagging or other protective services.

The Railroad Company's contact is:

*** Richard Wagner, Manager of Public Projects
BNSF Railway, NW Division
Richard.Wagner@BNSF.com ***

No act of the Railroad Company in supervising or approving any work shall reduce or in any way affect the liability of the Contractor for damages, expense, or cost which may result to the Railroad Company from the construction of this Contract.

Unless otherwise provided, all personnel assigned by the Railroad Company, other than those engaged in performing work by the Railroad Company as listed under Construction Work by Railroad Company, will be considered protective personnel.

In general, the Railroad Company will furnish protective services whenever any of the Contractor's operations take place within or near railroad right of way and, in the opinion of the Railroad Company's representative, could endanger railroad facilities or create a hazard to railroad operations.

The Railroad Company's policy for assignment of railroad flaggers requires that the flagging position is established for fixed work days and times. Any railroad flagging performed outside of these parameters may be subject to overtime costs. The Contractor shall verify with the Railroad Company what categories of railroad flagging constitute overtime work, and obtain prior authorization from the Project Engineer before coordinating with the Railroad Company for flagging requiring overtime payments.

The Contractor shall submit to the Railroad Company and the Project Engineer, in writing, an itinerary of work within the Railroad Company's right of way or otherwise requiring a Railroad Company flagger for the following week. If such work spans multiple weeks, the itinerary shall be provided in advance of each work week.

There will be no cost to the Contractor for the railroad protective services, unless:

- Such services result from the Contractor's failure to comply with the terms and conditions of its contract with the Contracting Agency or with its Contractor's Right of Entry Agreements with the Railroad Company.

- The Contractor fails to obtain authorization from the Project Engineer prior to coordinating with the Railroad Company for any flagging requiring overtime payments.

- The Contractor arranges for assignment of a railroad flagger and alters Project work so that a flagger is no longer needed, and adequate advance notice is not provided to the Railroad Company of such change in the need for a flagger (*i.e.* causing the Railroad Company to dispatch a flagger billable to the Project when one is not required).

INFORMATIONAL COPY ONLY, NOT FOR BIDDING PURPOSES

Construction Work by Railroad Company

The work by the Railroad Company as described below will be performed by the Railroad Company with its own forces at no cost to the Contractor:

*** BNSF Railroad Flagging, Inspection of work on RR Right of Way ***

All work which is performed by the Railroad Company at the Contractor's request and which is for the Contractor's benefit or convenience shall be at the Contractor's expense and the Contractor shall reimburse the Railroad Company for all costs for such work.

The Contractor shall cooperate with the Railroad Company and so conduct operations that the necessary reconstruction of its facilities and the removal of existing facilities can be accomplished without interruption of service.

Contractor's Right of Entry Agreement

No work shall be commenced within the Railroad Company's Property until the Contractor has executed, delivered, and received in return the fully executed Contractor's Right-of-Entry Agreement from the Railroad Company, and has obtained all of the insurance required by the Railroad Company as specified therein. All work within the Railroad Company's right of way or within 25 feet of a public railroad grade crossing shall be in accordance with Railroad's Contractor Requirements and the Contractor's Right of Entry Agreement (See ***Exhibit C-1***).

The Contractor, it subcontractors or agents, shall at its own expense, obtain and maintain in force all insurance required by Railroad until the completion date of the contract as described in Section 1-08.5 except as stated herein.

When all the work involving construction activities within or immediately adjacent to the railroad right of way is completed, the Contractor may make a written request to the Engineer to be relieved of the responsibility to continue all or part of the insurance specified above. If the Engineer deems the portion of the work in that area is complete, the Engineer may approve the Contractor's request. However, if for any reason the Contractor resumes or starts any new work in that area (including being ordered to do so by the Engineer), the insurance shall be reinstated by the Contractor before the work is started. If the insurance must be reinstated because of the Contractor's operations or failure of the Contractor to perform all the contract requirements, the costs shall be the responsibility of the Contractor. If the insurance must be reinstated because of changes to the contract, the costs will be considered in accordance with Section 1-04.4.

(August 7, 2006)

Contractor's Right of Entry and Insurance Requirements - BNSF

No work shall commence within BNSF Railway Company (BNSF) right of way until the Contractor has executed, delivered, and received in return the fully executed Contractor's Right-of-Entry Agreement from BNSF, and has obtained all of the insurance required by the Railroad. All work within BNSF's right of way shall be in accordance with BNSF's Contractor Requirements and the Contractor's Right of Entry Agreement (See Appendices and Exhibits, which are made part of this contract).

The Contractor, its Subcontractors or agents, shall at its own expense, obtain and maintain in force all insurance required by BNSF until the completion date of the contract as described in Section 1-08.5 except as stated herein.

INFORMATIONAL COPY ONLY, NOT FOR BIDDING PURPOSES

When all the work involving construction activities within or immediately adjacent to the Railroad right of way is completed, the Contractor may make a written request to the Engineer to be relieved of the responsibility to continue the insurance required by BNSF. If the Engineer deems the portion of the work in that area is complete, the Engineer may approve the Contractor's request. However, if for any reason the Contractor resumes or starts any new work in that area (including being ordered to do so by the Engineer), the insurance shall be reinstated by the Contractor before the work is started. If the insurance must be reinstated because of the Contractor's activities or failure of the Contractor to perform all the contract requirements, the costs shall be the responsibility of the Contractor. If the insurance must be reinstated because of changes to the contract, the costs will be considered in accordance with Section 1-04.4.

1-07.23 Public Convenience and Safety

Construction Under Traffic

Section 1-07.23(1) is supplemented with the following:

(January 2, 2012)
Work Zone Clear Zone

The Work Zone Clear Zone (WZCZ) applies during working and nonworking hours. The WZCZ applies only to temporary roadside objects introduced by the Contractor's operations and does not apply to preexisting conditions or permanent Work. Those work operations that are actively in progress shall be in accordance with adopted and approved Traffic Control Plans, and other contract requirements.

During nonworking hours equipment or materials shall not be within the WZCZ unless they are protected by permanent guardrail or temporary concrete barrier. The use of temporary concrete barrier shall be permitted only if the Engineer approves the installation and location.

During actual hours of work, unless protected as described above, only materials absolutely necessary to construction shall be within the WZCZ and only construction vehicles absolutely necessary to construction shall be allowed within the WZCZ or allowed to stop or park on the shoulder of the roadway.

The Contractor's nonessential vehicles and employees private vehicles shall not be permitted to park within the WZCZ at any time unless protected as described above.

Deviation from the above requirements shall not occur unless the Contractor has requested the deviation in writing and the Engineer has provided written approval.

Minimum WZCZ distances are measured from the edge of traveled way and will be determined as follows:

Regulatory Posted Speed	Distance from Traveled Way (Feet)
35 mph or less	10 *
40 mph	15
45 to 55 mph	20
60 mph or greater	30

INFORMATIONAL COPY ONLY, NOT FOR BIDDING PURPOSES

* or 2-feet beyond the outside edge of sidewalk

Minimum Work Zone Clear Zone Distance

(******)

Payment

No additional compensation will be paid to the Contractor for any cost or expense incurred as a result of the requirements of this provision and all costs shall be considered incidental to and included in other applicable contract items.

PROSECUTION AND PROGRESS

Add the following new section:

1-08.0 Preliminary Matters

(May 25, 2006 APWA GSP)

Add the following new section:

1-08.0(1) Preconstruction Conference

(October 10, 2008 APWA GSP)

Prior to the Contractor beginning the work, a preconstruction conference will be held between the Contractor, the Engineer and such other interested parties as may be invited. The purpose of the preconstruction conference will be:

1. To review the initial progress schedule;
2. To establish a working understanding among the various parties associated or affected by the work;
3. To establish and review procedures for progress payment, notifications, approvals, submittals, etc.;
4. To establish normal working hours for the work;
5. To review safety standards and traffic control; and
6. To discuss such other related items as may be pertinent to the work.

The Contractor shall prepare and submit at the preconstruction conference the following:

1. A breakdown of all lump sum items;
2. A preliminary schedule of working drawing submittals; and
3. A list of material sources for approval if applicable.

Add the following new section:

1-08.0(2) Hours of Work

(******)

Except in the case of emergency or unless otherwise approved by the Contracting Agency, the normal straight time working hours for the Contract shall be any consecutive 8-hour period between 7:00 a.m. and 6:00 p.m. of a working day with a maximum 1-hour lunch break and a 5-day work week. The normal straight time 8-hour working period for the

INFORMATIONAL COPY ONLY, NOT FOR BIDDING PURPOSES

Contract shall be established at the preconstruction conference or prior to the Contractor commencing the work.

Written permission from the Engineer is required, if a Contractor desires to perform work on holidays, Saturdays, or Sundays; before 7:00 a.m. or after 6:00 p.m. on any day; or longer than an 8-hour period on any day. The Contractor shall apply in writing to the Engineer for such permission, no later than noon on the working day prior to the day for which the Contractor is requesting permission to work.

For Railroad Flagging purposes, the Contractor shall outline their work hours within BNSF Right of Way a **minimum of 28 Calendar Days** prior to the commencement of that work. For Example: Monday through Friday, 7:00 a.m. to 4:30 p.m., or Tuesday through Friday, 6:30 a.m. to 5:00 p.m., etc. The Contractor shall be prepared to diligently pursue work in those hours or be prepared to reimburse the Contracting Agency for Railroad Flagging time that wasn't necessary. Reimbursement will be made to the County by way of a reduction on the next Contract Pay Estimate to the Contractor. The flagging rate will be $80.00 per hour for unnecessary flagging, such as when work is not performed on a certain day within the schedule, or work is called off early for the day and the railroad flagger was scheduled to be there. Exceptions will be made for inclement weather, or at the discretion of the Engineer. For railroad flagging time beyond the previously accepted work schedule, such as extra day or weekend work, after hours work, etc. it will also be the responsibility of the Contractor to reimburse the Contracting Agency as stated above. If the Contractor wishes to modify their work schedule, they shall submit the new schedule a **minimum of two (2) calendar weeks** before the change will go into effect. If the Contractor wishes to work any part of the modified work schedule prior to the completion of the 2 calendar weeks, they will be responsible for reimbursement of flagging costs for the hours outside of the previously approved schedule.

Permission to work between the hours of 10:00 p.m. and 7:00 a.m. during weekdays and between the hours of 10:00 p.m. and 9:00 a.m. on weekends or holidays may also be subject to noise control requirements. Approval to continue work during these hours may be revoked at any time the Contractor exceeds the Contracting Agency's noise control regulations or complaints are received from the public or adjoining property owners regarding the noise from the Contractor's operations. The Contractor shall have no claim for damages or delays should such permission be revoked for these reasons.

Permission to work Saturdays, Sundays, holidays, or other than the agreed upon normal straight time working hours Monday through Friday may be given subject to certain other conditions set forth by the Contracting Agency or Engineer. These conditions may include but are not limited to:

- The Engineer may require designated representatives to be present during the work. Representatives who may be deemed necessary by the Engineer include, but are not limited to: survey crews; personnel from the Contracting Agency's material testing lab; inspectors; and other Contracting Agency employees when in the opinion of the Engineer, such work necessitates their presence.
- On non-Federal aid projects, requiring the Contractor to reimburse the Contracting Agency for the costs in excess of straight-time costs for Contracting Agency representatives who worked during such times.
- Considering the work performed on Saturdays, Sundays, and holidays as working days with regard to the contract time.
- Considering multiple work shifts as multiple working days with respect to contract time, even though the multiple shifts occur in a single 24-hour period.

INFORMATIONAL COPY ONLY NOT FOR BIDDING PURPOSES

1-08.1 Subcontracting

Section 1-08.1 is supplemented with the following:

(October 12, 1998)
Prior to any subcontractor or agent beginning work, the Contractor shall submit to the Engineer a certification (WSDOT Form 420-004) that a written agreement between the Contractor and the subcontractor or between the subcontractor and any lower tier subcontractor has been executed. This certification shall also guarantee that these subcontract agreements include all the documents required by the Special Provision Federal Agency Inspection.

A subcontractor or lower tier subcontractor will not be permitted to perform any work under the contract until the following documents have been completed and submitted to the Engineer:

1. Request to Sublet Work (Form 421-012), and
2. Contractor and Subcontractor or Lower Tier Subcontractor Certification for Federal-aid Projects (Form 420-004).

The Contractor's records pertaining to the requirements of this Special Provision shall be open to inspection or audit by representatives of the Contracting Agency during the life of the contract and for a period of not less than three years after the date of acceptance of the contract. The Contractor shall retain these records for that period. The Contractor shall also guarantee that these records of all subcontractors and lower tier subcontractors shall be available and open to similar inspection or audit for the same time period.

Subcontract Completion and Return of Retainage Withheld

Section 1-08.1(1) is revised to read:

(August 4, 2014)
The following procedures shall apply to all subcontracts entered into as a part of this Contract:

Requirements

1. The Prime Contractor or Subcontractor shall make payment to the Subcontractor not later than ten days after receipt of payment from the Contracting Agency for work satisfactorily completed by the Subcontractor, to the extent of each Subcontractor's interest therein.

2. Prompt and full payment of retainage from the Prime Contractor to the Subcontractor shall be made within 30 days after Subcontractor's Work is satisfactorily completed.

3. For purposes of this Section, a Subcontractor's work is satisfactorily completed when all task and requirements of the Subcontract have been accomplished and including any required documentation and material testing.

4. Failure by a Prime Contractor or Subcontractor to comply with these requirements may result in one or more of the following:

   a. Withholding of payments until the Prime Contractor or Subcontractor complies

INFORMATIONAL COPY ONLY, NOT FOR BIDDING PURPOSES

b. Failure to comply shall be reflected in the Prime Contractor's Performance Evaluation

c. Cancellation, Termination, or Suspension of the Contract, in whole or in part

d. Other sanctions as provided by the subcontract or by law under applicable prompt pay statutes.

Conditions
This clause does not create a contractual relationship between the Contracting Agency and any Subcontractor as stated in Section 1-08.1. Also, it is not intended to bestow upon any Subcontractor, the status of a third-party beneficiary to the Contract between the Contracting Agency and the Contractor.

Payment
The Contractor will be solely responsible for any additional costs involved in paying retainage to the Subcontractors. Those costs shall be incidental to the respective Bid Items.

1-08.4 Prosecution Of Work

The first sentence of Section 1-08.4 is revised to read:

(******)
The Contractor shall begin work on **May 11, 2015**, unless otherwise approved by the Engineer.

1-08.5 Time For Completion

The third paragraph of Section 1-08.5 is revised to read:

(******)
Contract time shall begin on the first working day. The first working day shall be May 11, 2015, unless otherwise approved by the Engineer.

Contract time will be suspended upon receiving Temporary Bridge Plans and Bridge Demolition Plans for review in accordance with these Special Provisions and appendices, including but not limited to the Exhibit C-1 (Agreement Between BNSF Railway Company and the Contractor) in the Construction and Maintenance Agreement. These completed documents shall be submitted to the Contracting Agency within 10 calendar days of Contract Award so that they may be reviewed and forwarded to BNSF for their review.

Suspension of Work will continue until approval has been given by BNSF Railroad through the Contracting Agency for work to proceed. Anticipated review time will be a minimum of 4 calendar weeks.

All work within BNSF right of way (as shown in the Plans) shall be physically completed by **September 30, 2015**. BNSF prohibits work within their Right of Way between October 1 and December 31 of any given year.

Section 1-08.5 is supplemented with the following:

(March 13, 1995)

INFORMATIONAL COPY ONLY, NOT FOR BIDDING PURPOSES

This project shall be physically completed within **90 working days**.

1-08.6 Suspension of Work

Section 1-08.6 is supplemented with the following:

(******)
Contract time may be suspended for procurement of critical materials (Procurement Suspension). In order to receive a Procurement Suspension, the Contractor shall within 10 calendar days after execution by the Contracting Agency place purchase orders for all materials deemed critical by the Contracting Agency for physical completion of the contract. The Contractor shall provide copies of purchase orders for the critical materials. Such purchase orders shall disclose the purchase order date and estimated delivery dates for such critical material.

The Contractor shall show procurement of the materials listed below as activities in the Progress Schedule. If the approved Progress Schedule indicates that the materials procurement are critical activities, and if the Contractor has provided documentation that purchase orders are placed for the critical materials within the prescribed 10 calendar days, then the contract time shall be suspended upon physical completion of all critical work except that work dependent upon the below listed critical materials:

Items within Lump Sum Item:
"Superstructure Bridge #399, W-NW"
"W35DG Prestressed Conc. Girder"
"Elastomeric Bearing Pad"
"Embedded Plate"
"Pavement Armor"

Charging of Contract time will resume upon the delivery of the critical materials to the Contractor, notification that the critical materials are ready for delivery to the Contractor from the Contracting Agency's Material Laboratory, or ***70*** calendar Days after execution by the Contracting agency, whichever occurs first.

1-08.9 Liquidated Damages

(August 14, 2013 APWA GSP)

Revise the fourth paragraph to read:

When the Contract Work has progressed to Substantial Completion as defined in the Contract, the Engineer may determine that the work is Substantially Complete. The Engineer will notify the Contractor in writing of the Substantial Completion Date. For overruns in Contract time occurring after the date so established, the formula for liquidated damages shown above will not apply. For overruns in Contract time occurring after the Substantial Completion Date, liquidated damages shall be assessed on the basis of direct engineering and related costs assignable to the project until the actual Physical Completion Date of all the Contract Work. The Contractor shall complete the remaining Work as promptly as possible. Upon request by the Project Engineer, the Contractor shall furnish a written schedule for completing the physical Work on the Contract.

INFORMATIONAL COPY ONLY, NOT FOR BIDDING PURPOSES

Measurement and Payment

Payments

Section 1-09.9 is supplemented with the following:

(March 13, 1995)
The quantity of the following items to be paid for on this project shall be the quantity shown in the Proposal, unless changes are made in accordance with Section 1-04.4 which affect this quantity. The quantity shown in the Proposal will be adjusted by the amount of the change and will be paid for as specified in Section 1-04.4.

*** "Roadway Excavation Incl. Haul", "Embankment Compaction" ***

The quantities in the Proposal are listed only for the convenience of the Contractor in determining the volume of work involved and are not guaranteed to be accurate. The prospective bidders shall verify these quantities before submitting a bid. No adjustments other than for approved changes will be made in the quantity even though the actual quantities required may deviate from those listed.

The unit contract price for these items shall be full pay to construct and complete this portion of the work.

Retainage

Section 1-09.9(1) content and title is deleted and replaced with the following:

(June 27, 2011)
Vacant

1-09.13 Claims Resolution

1-09.13(3) Claims $250,000 or Less

(October 1, 2005 APWA GSP)

Delete this Section and replace it with the following:

The Contractor and the Contracting Agency mutually agree that those claims that total $250,000 or less, submitted in accordance with Section 1-09.11 and not resolved by nonbinding ADR processes, shall be resolved through litigation unless the parties mutually agree in writing to resolve the claim through binding arbitration.

1-09.13(3)A Administration of Arbitration

(October 1, 2005 APWA GSP)

Revise the third paragraph to read:

The Contracting Agency and the Contractor mutually agree to be bound by the decision of the arbitrator, and judgment upon the award rendered by the arbitrator may be entered in

INFORMATIONAL COPY ONLY, NOT FOR BIDDING PURPOSES

the Superior Court of the county in which the Contracting Agency's headquarters are located. The decision of the arbitrator and the specific basis for the decision shall be in writing. The arbitrator shall use the contract as a basis for decisions.

TEMPORARY TRAFFIC CONTROL

General

Section 1-10.1 is supplemented with the following:

(April 1, 2013)
The Contracting Agency will provide the following labor, equipment and/or materials resources to the Contractor for use on the project.

*** Class A Traffic Signs as outlined in the included Construction Sign Plan and Sign Table ***

The Contractor shall notify the Engineer when each resource is to be utilized and shall provide a minimum of *** 5 (five) *** working days advance notice to allow any necessary arrangements to be made.

1-10.2 Traffic Control Management

General

Section 1-10.2(1) is supplemented with the following:

(December 1, 2008)
Only training with WSDOT TCS card and WSDOT training curriculum is recognized in the State of Washington. The Traffic Control Supervisor shall be certified by one of the following:

The Northwest Laborers-Employers Training Trust
27055 Ohio Ave.
Kingston, WA 98346
(360) 297-3035

Evergreen Safety Council
401 Pontius Ave. N.
Seattle, WA 98109
1-800-521-0778 or (206) 382-4090

The American Traffic Safety Services Association
15 Riverside Parkway, Suite 100
Fredericksburg, Virginia 22406-1022
Training Dept. Toll Free (877) 642-4637
Phone: (540) 368-1701

1-10.2(2) Traffic Control Plans

Section 1-10.2(2) is supplemented with the following:

INFORMATIONAL COPY ONLY, NOT FOR BIDDING PURPOSES

(******)
The County has provided the Traffic Sign Plan for this project and said plan(s) are included in these specifications and is made part of this contract.

The work contemplated in this contract will require the Contractor to take special precautions in implementing safe traffic control procedures in accordance with the MUTCD. The Contractor's attention is directed to WAC 296-155-305 as it relates to signing, signaling and flaggers. All questions concerning new standards should be directed to the Wash. State Dept. of Labor and Industries.

The Contractor will not be permitted to close W-NW.

1-10.3 Traffic Control Labor, Procedures and Devices

1-10.3(3) Traffic Control Devices

Construction Signs

Section 1-10.3(3)A is supplemented with the following:

(******)
The required signs will be available to the Contractor at the Grant County Sign Shop, 124 Enterprise St. SE, Ephrata, WA, (509) 754-6085, on normal work days. The Contractor shall make arrangements with the Engineer at least five working days prior to picking up the signs. The Contractor shall sign an itemized receipt at the time of acquisition.

Signs shall be returned to Grant County Sign Shop by the Contractor when their need has ceased as determined by the Engineer. The value of signs furnished by the Contracting Agency to the Contractor is fixed at $10.00 per square foot. The value of such signs which are damaged or not returned as provided in Sections 1-10.1 and 1-10.3(3)A will be deducted from payment due or to become due the Contractor.

Wood Sign Posts
Use the charts below to determine post size for Class A construction signs.

One Post Installation

Post Size	Min. Sign Sq. Ft.	Max Sign Sq. Ft.
4x4	-	16.0
4x6	17.0	20.0
6x6	21.0	25.0
6x8	26.0	31.0

Two Post Installation
(For signs 5 feet or greater in width)

Post Size	Min. Sign Sq. Ft.	Max Sign Sq. Ft.
4x4	-	16.0
4x6	17.0	36.0
6x6	37.0	46.0
6x8	47.0	75.0 *

INFORMATIONAL COPY ONLY NOT FOR BIDDING PURPOSES

* The Engineer will determine the post size for signs greater than 75 square feet.

Barricades

Section 1-10.3(3)D is supplemented with the following:

(******)
The barricades, provided by the contractor, shall be Type III and constructed in accordance with the details shown in the MUTCD and the Standard Plans. The barricade width shall be eight (8) feet.

As may be indicated in the Signing Plan, Traffic Control Plans, or the Contract Provisions, the Contractor may be required to install signs, warning lights, or both, on barricades.

1-10.4 Measurement

Lump Sum Bid for Project (No Unit Items)

Section 1-10.4(1) is supplemented with the following:

(August 2, 2004)
The proposal contains the item "Project Temporary Traffic Control", lump sum. The provisions of Section 1-10.4(1) shall apply.

1-10.5 Payment

Section 1-10.5(1) is supplemented with the following:

(******)
The lump sum contract price for "Project Temporary Traffic Control" shall include all costs incurred by the Contractor in placing and maintaining Class A traffic control signs furnished by the County and in furnishing, placing, and maintaining traffic control devices including Class B signs, traffic control vehicles, traffic control supervisor, traffic control labor including flaggers, two-way radios, eight (8) foot wide Type III barricades, flashers, posts for signs and other equipment and materials in accordance with the Construction Sign Plan, Traffic Control Plan(s) and Section 1-10 of the Standard Specifications. Progress payment for the lump sum item "Project Temporary Traffic Control" will be made as follows:

1. When the initial temporary traffic control devices (Class A signs) are set up, fifty (50) percent of the amount bid for the item will be paid.

2. Payment for the remaining fifty (50) percent of the amount bid for the item will be paid on a prorated basis in accordance with the total job progress as determined by progress payments.

DIVISION 2 EARTHWORK

CLEARING, GRUBBING, AND ROADSIDE CLEANUP

INFORMATIONAL COPY ONLY, NOT FOR BIDDING PURPOSES

2-01.1 Description

Section 2-01.1 is supplemented with the following:

(March 13,1995)
Clearing and grubbing on this project shall be performed within the following limits:

Station 6+75 to 13+50

REMOVAL OF STRUCTURES AND OBSTRUCTIONS

2-02.3 Construction Requirements

Section 2-02.3 is supplemented with the following:

Removal of Bridges, Box Culverts, and Other Drainage Structures

Section 2-02.3(2) is supplemented with the following:

(******)
The Contractor shall remove existing Bridge #399 – W-NW Road, located in Section 5, T20N, R23E WM, as shown on the plans, after routing traffic onto the temporary bridge.

Section 2-02.3(2)A1 is supplemented with the following:

(******)
Demolition plan will be reviewed by Burlington Northern Santa Fe Structures Office, prior to any approval for removal. Review is anticipated to take 4 calendar weeks. Demolition plan should be submitted with the Temporary Bridge submittal as covered in these Special Provisions in *Time For Completion*, Section 1-08.5.

(June 26, 2000)
Use of Explosives
Explosives shall not be used in the demolition,

(******)
Requirements for Closing Bridge to Traffic Prior to Beginning Removal

The Contractor shall not close the existing bridge to traffic and shall not begin bridge removal operations until the following conditions are met:

1. The Contractor has received the Engineer's approval of the bridge demolition plan.
2. The Contractor has sufficient material on hand to complete bridge removal and bridge construction operations in the least possible time.
3. The Contractor shall furnish a report on the status of material delivery to the Engineer. The report shall specify the materials already available at the site, the materials yet to arrive at the site, and the scheduled delivery dates of the materials yet to arrive at the site.

INFORMATIONAL COPY ONLY, NOT FOR BIDDING PURPOSES

4. The Engineer has received the list of residents notified about the project and road closure.
5. The Contractor has received the Engineer's approval to proceed.

Payment

Section 2-02.5 is supplemented with the following:

(******)
"Removal of Existing Bridge", lump sum.

ROADWAY EXCAVATION AND EMBANKMENT

Construction Requirements

Disposal Of Surplus Material

Section 2-03.3(7)A is supplemented with the following:

(******)
A waste site has not been provided by the County for the disposal of excess material and debris.

STRUCTURE EXCAVATION

Construction Requirements

Preparation for Placing Foundations

Section 2-09.3(3)C is supplemented with the following:

(******)
The Contractor is advised that the excavation for the bridge footings will be partly in solid basalt rock. Information is outlined in the Geotechnical Report in Appendix A. The Contractor shall excavate for the foundations using mechanical methods of removal that allows NO loss of material onto BNSF Railroad Tracks and ensures containment of all material. **The Contractor shall submit "Method of Excavation Plan" to the Engineer for approval a minimum of 2 calendar weeks prior to Structure Excavation.** This plan shall explain the excavation process and include measures to ensure no material falls onto the track area and that train traffic will not be impacted in any way by the excavation operations.

Shoring And Cofferdams

Section 2-09.3(3)D is supplemented with the following:

(August 2, 2010)
The Contractor shall protect the existing track and facilities of the Railroad Company from damage due to the Contractor's operations, and shall shore all excavation adjacent to the existing railroad track. Shoring shall be steel sheet piling designed for a Cooper E-80 loading according to the American Railway Engineering and Maintenance Association (AREMA) Manual For Railway Engineering. Damage to the railroad track or railroad facilities, due to the

INFORMATIONAL COPY ONLY, NOT FOR BIDDING PURPOSES

Contractor's operations, will be repaired by the Railroad at the Contractor's expense.

(March 13, 1995)
Because of the nearness of the work to existing ***BNSF RR track,*** the Contractor shall protect the ***BNSF RR track*** during the ***Removal of Existing Bridge***.

CONSTRUCTION GEOSYNTHETIC

2-12.3 Construction requirements

Section 2-12.3 is supplemented with the following

(******)
The Contractor shall perform structure excavation to the limits shown on the plans on the Bridge approaches. Construction Geotextile for Separation shall be placed in sections between each surfacing layer and be approved by the Engineer prior to placement of the next layer. Overlaps shall be 2' minimum for all joints.

2-12.4 Measurement

Section 2-12.4 is supplemented with the following

(******)
Construction Geotextile for Separation will be measured by the square yard for the perimeter of ground surface actually covered.

DIVISION 3 PRODUCTION FROM QUARRY AND PIT SITES AND STOCKPILING

PRODUCTION FROM QUARRY AND PIT SITES

State Furnished Material Sources

Section 3-01.3 is supplemented with the following:

(******)
The following source(s) of stockpiled materials are made available to the Contractor at the unit prices shown under the section entitled Stockpiling Aggregates:

Stockpile Site *** #580 – Monument Hill Pit *** source for *** crushed surfacing base course, maintenance rock and gravel backfill for wall *** is located in Section 28, Township 21 North, Range 24 East W.M., as shown in the Plans.

STOCKPILING AGGREGATES

General Requirements

INFORMATIONAL COPY ONLY; NOT FOR BIDDING PURPOSES

Removing Aggregates From Stockpiles

Section 3-02.2(7) is supplemented with the following:

(******)
Crushed Surfacing Base Course, Maintenance Rock and Gravel Backfill for Wall aggregates for use in this project are existing in stockpile at the location and for the unit prices listed below and in the amounts shown in the Plans.

Location	Material	Price
Index #580	Crushed Surfacing Base Course	$4.10/C.Y.
Monument Hill Pit	Maintenance Rock	$4.25/C.Y.
Sec. 28, T21N, R24E WM	Gravel Backfill for Wall	$4.25/C.Y.

The Contractor may obtain material from other sources provided they are approved by the Engineer and provided the Contractor makes all arrangements and pays all expenses required for the acquisition of the materials.

Payment

Section 3-02.5 is supplemented with the following:

(******)
The unit contract price shall be full payment for the purchase, loading, hauling, placing and compacting of materials provided in stockpile or, if so chosen by the Contractor, for the furnishing, hauling, placing and compacting of materials obtained by the Contractor from an approved source of the Contractor's own choice and acquisition.

If the Contractor chooses to use the materials existing in stockpile, the County shall deduct the costs of such aggregates from monthly progress estimates in accordance with the rates specified above and based on the quantity of materials allowed by the Engineer on the monthly progress payments and final estimate.

SITE RECLAMATION

Contracting-Agency Provided Sites

Section 3-03.2(1) is supplemented with the following:

(March 13, 1995)
Site reclamation will be performed by the Contracting Agency on all sites furnished by the Contracting Agency.

DIVISION 4 BASES

BALLAST AND CRUSHED SURFACING

Construction Requirements

Equipment

INFORMATIONAL COPY ONLY - NOT FOR BIDDING PURPOSES

The first sentence of Section 4-04.3(1) is revised to read:

(******)
All equipment necessary for the satisfactory performance of this construction shall be on the project and approved by the Engineer prior to beginning work. The Contractor shall demonstrate that equipment of sufficient size, number, and reliability has been provided to meet the project schedule submitted by the Contractor, if requested by the Engineer.

Placing and Spreading

The third paragraph of Section 4-04.3(4) is supplemented with the following:

(******)
The Contractor shall fill each hauling vehicle with the same quantity of crushed aggregate. This is necessary in order to provide consistent spreads within the limits of the specific section determined by the Engineer.

The Contractor shall place the material in such a way as to minimize the impact of the hauling vehicles. Hauling over any of the surfacing materials prior to processing shall not be permitted.

Miscellaneous Requirement

The second sentence of the first paragraph of Section 4-04.3(7) is revised to read:

(******)
Each course of surfacing material shall be placed in its entirety before placing the succeeding course unless otherwise authorized by the Engineer. The Contractor shall repair any segregated areas by reprocessing the effected section of each course before placing any additional material.

Payment

Section 4-04.5 is supplemented with the following:

(******)
"Crushed Surfacing Maintenance Rock", per cubic yard.

DIVISION 5 SURFACE TREATMENTS AND PAVEMENTS

HOT MIX ASPHALT

5-04.3(3)A Material Transfer Device / Vehicle

(January 16, 2014 APWA GSP)

The first paragraph of this section is revised to read:

Additionally, a material transfer device or vehicle (MTD/V) is not required at the following locations: ***Anywhere on project site, W-NW Road***.

INFORMATIONAL COPY ONLY, NOT FOR BIDDING PURPOSES

5-04.3(7)A2 Statistical or Nonstatistical Evaluation

Delete this section and replace it with the following:

5-04.3(7)A2 Nonstatistical Evaluation

(January 16, 2014 APWA GSP)

Mix designs for HMA accepted by Nonstatistical evaluation shall;

- Be submitted to the Project Engineer on WSDOT Form 350-042
- Have the aggregate structure and asphalt binder content determined in accordance with WSDOT Standard Operating Procedure 732 and meet the requirements of Sections 9-03.8(2) and 9-03.8(6).
- Have anti-strip requirements, if any, for the proposed mix design determined in accordance with WSDOT Test Method T 718 or based on historic anti-strip and aggregate source compatibility from WSDOT lab testing. Anti-strip evaluation of HMA mix designs utilized that include RAP will be completed without the inclusion of the RAP.

At or prior to the preconstruction meeting, the contractor shall provide one of the following mix design verification certifications for Contracting Agency review;

- The proposed mix design indicated on a WSDOT mix design/anti-strip report that is within one year of the approval date
- The proposed HMA mix design submittal (Form 350-042) with the seal and certification (stamp & signature) of a valid licensed Washington State Professional Engineer.
- The proposed mix design by a qualified City or County laboratory mix design report that is within one year of the approval date.

The mix design will be performed by a lab accredited by a national authority such as Laboratory Accreditation Bureau, L-A-B for Construction Materials Testing, The Construction Materials Engineering Council (CMEC's) ISO 17025 or AASHTO Accreditation Program (AAP) and shall supply evidence of participation in the AASHTO Material Reference Laboratory (AMRL) program.

At the discretion of the Engineer, agencies may accept mix designs verified beyond the one year verification period with a certification from the Contractor that the materials and sources are the same as those shown on the original mix design.

5-04.3(8)A1 General

(January 16, 2014 APWA GSP)

Delete this section and replace it with the following:

Acceptance of HMA shall be as defined under nonstatistical or commercial evaluation.

Nonstatistical evaluation will be used for all HMA not designated as Commercial HMA in the contract documents.

INFORMATIONAL COPY ONLY, NOT FOR BIDDING PURPOSES

The mix design will be the initial JMF for the class of HMA. The Contractor may request a change in the JMF. Any adjustments to the JMF will require the approval of the Project Engineer and must be made in accordance with Section 9-03.8(7).

Commercial evaluation may be used for Commercial HMA and for other classes of HMA in the following applications: sidewalks, road approaches, ditches, slopes, paths, trails, gores, prelevel, and pavement repair. Other nonstructural applications of HMA accepted by commercial evaluation shall be as approved by the Project Engineer. Sampling and testing of HMA accepted by commercial evaluation will be at the option of the Project Engineer. Commercial HMA can be accepted by a contractor certificate of compliance letter stating the material meets the HMA requirements defined in the contract.

5-04.3(8)A4 Definition of Sampling Lot and Sublot

(January 16, 2014 APWA GSP)

Section 5-04.3(8)A4 is supplemented with the following:

For HMA in a structural application, sampling and testing for total project quantities less than 400 tons is at the discretion of the engineer. For HMA used in a structural application and with a total project quantity less than 800 tons but more than 400 tons, a minimum of one acceptance test shall be performed:

i. If test results are found to be within specification requirements, additional testing will be at the engineers discretion.
ii. If test results are found, not to be within specification requirements, additional testing as needed to determine a CPF shall be performed.

5-04.3(8)A5 Test Results

(January 16, 2014 APWA GSP)

The first paragraph of this section is deleted.

5-04.3(8)A6 Test Methods

(January 16, 2014 APWA GSP)

Delete this section and replace it with the following:

Testing of HMA for compliance of Va will be at the option of the Contracting Agency. If tested, compliance of Va will be use WSDOT Standard Operating Procedure SOP 731. Testing for compliance of asphalt binder content will be by WSDOT FOP for AASHTO T 308. Testing for compliance of gradation will be by WAQTC FOP for AASHTO T 27/T 11.

5-04.5(1)B Price Adjustments for Quality of HMA Compaction

(January 16, 2014 APWA GSP)

Delete this section and replace it with the following:

INFORMATIONAL COPY ONLY, NOT FOR BIDDING PURPOSES

The maximum CPF of a compaction lot is 1.00.

For each compaction lot of HMA when the CPF is less than 1.00, a Nonconforming Compaction Factor (NCCF) will be determined. THE NCCF equals the algebraic difference of CPF minus 1.00 multiplied by 40 percent. The Compaction Price Adjustment will be calculated as the product of the NCCF, the quantity of HMA in the lot in tons and the unit contract price per ton of the mix.

DIVISION 6 STRUCTURES

GENERAL REQUIREMENTS FOR STRUCTURES

Work Access and Temporary Structures

Section 6-01.5 is re-titled and revised to read:

(******)

Temporary Bridge

The Contractor shall design, furnish, erect, maintain, and remove a temporary bridge, including substructure, and approaches, in accordance with this Special Provision and the details shown in the Plans.

Geometric and Design Requirements

The temporary bridge shall conform to the following geometric requirements:

1. The temporary bridge shall be an overall minimum length of *** 65 feet ***.

2. The minimum useable roadway width on the temporary bridge between barriers or railings shall be *** 12 feet 0 inches ***.

3. Unless otherwise approved by the Engineer, the profile of the roadway deck shall be as specified in the Plans.

4. The temporary bridge superstructure shall provide a minimum vertical clearance of *** 21 feet *** to *** unlimited distance above the top of the existing BNSF rails ***.

The temporary bridge shall conform to the following design requirements:

1. The temporary bridge, including the barriers or railings, shall be designed in accordance with the latest edition of the AASHTO LRFD Bridge Design Specifications.

2. The vehicular live load used for design shall be 75 percent of HL-93, minimum. The Contractor shall provide and install two (2) allowable load signs, one to be placed at each end of the temporary bridge (MUTCD Sign R12-5). These signs shall label the allowable load capacity of the bridge, in TONS. Object Marker signs shall also be attached to each corner of the temporary bridge. Signs shall be 12" X 36" in dimension.

INFORMATIONAL COPY ONLY, NOT FOR BIDDING PURPOSES

3. The driving surface of the temporary bridge shall be durable, skid resistant deck, with an initial skid number of at least 35 and maintaining a skid number of 26 minimum, in accordance with AASHTO T 242.

4. Notwithstanding the requirements of Section 1-06.1, the materials used by the Contractor to compose the temporary bridge may be used (second hand), provided that the use of such used materials shall be subject to visual inspection and approval by the Engineer. For used (second hand) steel materials where the grade of steel cannot be positively identified, the design stresses for the steel shall conform to Section 6-02.3(17)B.

5. The temporary bridge substructure shall be designed in accordance with the WSDOT *Geotechnical Design Manual* (M46-03).

The approaches to the temporary bridge shall conform to the geometric requirements shown in the Plans. The approaches to the temporary bridge, including but not limited to, slopes, reinforced slopes, and retaining walls, shall be designed in accordance with the WSDOT *Geotechnical Design Manual* (M46-03):

Submittals

The Contractor shall submit six copies of working drawings and two copies of supporting design calculations of the temporary bridge to the Engineer for approval in accordance with Section 6-01.9. The submittal shall include an erection plan and procedure in accordance with Section 6-03.3(7)A.

When retaining walls are shown in the Plans, or are utilized by the Contractor, for construction of the approaches, the Contractor shall submit details of the retaining wall design to the Engineer for approval in accordance with the submittal requirements in this Special Provision, and the specific submittal requirements in the Standard Specifications for the specific type of retaining wall selected.

> Temporary Structures drawings, plans, and calculations will be reviewed by Burlington Northern Santa Fe Structures Office, prior to any approval for removal. Review is anticipated to take **4 calendar weeks**. Temporary Bridge submittal should be submitted with the Demolition plan as covered in these Special Provisions in *Time For Completion*, Section 1-08.5.

Construction and Removal

The Contractor shall construct the approaches to the temporary bridge in accordance with the details shown in the Plans. The Contractor shall construct retaining walls associated with the approaches in accordance with the details shown in the Plans and the Contractor's retaining wall design submittal as approved by the Engineer.

The Contractor shall construct the temporary bridge in accordance with the working drawings and erection plan as approved by the Engineer, environmental permit conditions specified in Section 1-07.5 as supplemented in these Special Provisions and as shown in the Plans, and in accordance with the details shown in the Plans. The Contractor shall maintain the temporary bridge, including the driving surface, for the life of the temporary bridge in this project.

All welding, repair welding, and welding inspection, of steel components of the temporary bridge shall conform to the Section 6-03.3(25) and 6-03.3(25)A requirements specified for steel bridges.

INFORMATIONAL COPY ONLY - NOT FOR BIDDING PURPOSES

After the temporary bridge is no longer needed, or upon request of the Engineer, the Contractor shall remove the temporary bridge and approaches, and shall restore the site to its original natural landscape to the satisfaction of the Engineer. Upon removal, the temporary bridge shall become the property of the Contractor.

Payment

Payment will be made in accordance with Section 1-04.1 for the following bid item:

"Temporary Bridge___", lump sum.

The lump sum contract price for "Temporary Bridge___" shall be full pay for performing the work as specified, including designing, constructing, maintaining and removing the temporary bridge substructure and superstructure and associated paving surface, barriers, railing, allowable load limit signs, and object marker signs.

All costs in connection with constructing approaches to the temporary bridge as shown in the Plans and as specified, including design and construction of retaining walls and reinforced slopes, excavation, hauling, placing and compacting embankment, base course, and pavement materials, furnishing and installing geosynthetic materials, and removing the approaches and restoring the site to its original natural landscape, shall be included in the unit and lump sum contract prices for the bid items associated with construction and removal of the approaches.

Utilities Supported by or Attached to Bridges

Section 6-01.10 is supplemented with the following:

(******)

Relocation of existing utilities outside of the bridge structure shall be the responsibility of the utility company. The Contractor shall notify the utility company at least two (2) weeks in advance of beginning any work.

The Contractor shall cooperate fully with the utility company in order to expedite all relocations and new installations.

Concrete Structures

Materials

Section 6-02.2 is supplemented with the following:

(April 7, 2008)

Fractured Fin Finish

The fractured fin finish shall be accomplished by the use of either a form liner selected from the approved products listed in the WSDOT Qualified Products List (QPL), latest edition, or a form liner approved by the Engineer as an equal product. For approval of form liners not listed in the current WSDOT QPL, the Contractor shall submit four copies of the request, along with catalogue cuts and other descriptive supporting information, as follows:

Two sets to the Project Engineer, accompanied by a 2 foot square physical sample of the form liner.

INFORMATIONAL COPY ONLY, NOT FOR BIDDING PURPOSES

The height of the form liner shall be equal to or greater than the height of the formed surface. Only elastomeric form liners are allowed to have horizontal splices.

(August 6, 2007)
The color shall match the color chip Washington Gray. Pigmented sealer color chips are available from the State Bridge and Structures Architect, WSDOT Bridge and Structures Office, P. O. Box 47340, Olympia, WA 98504-7340.

Construction Requirements

Section 6-02.3 is supplemented with the following:

Bridge Supported Utilities

(June 26, 2000)
The Contractor shall furnish and install the bridge utility supports, and the utility pipe or conduit pipe, as shown in the Plans.

Finishing Concrete Surfaces

Section 6-02.3(14) is supplemented with the following:

(August 1, 2005)
Pigmented Sealer

The Contractor shall submit a one-quart wet sample, a draw down color sample and spectrophotometer or colorimeter readings, taken in accordance with either ASTM D 2244 or Color Matching Conference (CMC) standards, for each batch. The calculated Delta E (DIELAB or CMC) shall not exceed 1.0 deviation from the color chip specified and available from the Contracting Agency. The Contractor shall label each wet sample and draw down color sample with the batch number. The Contractor shall not begin applying pigmented sealer until receiving the Engineer's written approval of the pigmented sealer color samples.

All surfaces to be sealed shall receive a Class 2 finish, (except that concrete barrier surfaces shall be finished in accordance with Section 6-02.3(11)A) and shall receive a light brush sandblasting in order that complete neutralization of the surface and subsequent penetration of the pigmented sealer is achieved. All curing agents and form release agents shall be removed. The surface shall be dry, clean and prepared in accordance with manufacturer's written instructions. The Contractor shall submit four copies of the manufacturer's written instructions.

The pigmented sealer shall be spray applied in accordance with the manufacturer's written instructions for application, qualification of applicator, rate of application, and number of coats to apply. Sealer shall be applied only when the air temperature is at or above 50F. Sealer shall not be applied until the concrete has cured for at least 28 days. It shall not be applied upon damp surfaces, nor shall it be applied when the air is misty, or otherwise unsatisfactory for the work, in the opinion of the manufacturer or the Engineer. The final appearance shall have an even and uniform color acceptable to the Engineer.

INFORMATIONAL COPY ONLY, NOT FOR BIDDING PURPOSES

For concrete surfaces such as columns, retaining walls and abutments, the pigmented sealer shall extend to 1 foot below the finish ground line, unless otherwise shown in the Plans.

(******)
Nonshrink Grout

The Contractor shall furnish and place the nonshrink grout specified herein at the following locations shown in the plans.

The grout shall be prepackaged nonshrink grout, mixed, placed and cured as recommended by the manufacturer.

The nonshrink grout shall meet the following requirements:

REQUIREMENT	TEST METHOD	VALUES
Early Volume Change	ASTM C 827	0% Shrinkage, 2.5% Expansion
Hardened Volume Change	CRD C 621	0% Shrinkage, 2.5% Expansion
Setting Time at Ambient	AASHTO T 131	30 minutes minimum
Conditions	AASHTO T 154	45 minutes minimum
Min Compressive Strength	AASHTO T 106	6,000 psi @ 3 days

The grout shall be a workable mix with flowability suitable for the intended application.

The Contractor shall submit a request for approval of material sources for the prepackaged nonshrink grout to the Engineer for approval along with test data from an independent testing laboratory confirming that the proposed grout will meet the specified nonshrink requirements. A sample of the prepackaged grout of the production lot to be used shall be submitted to the Engineer for approval. The Contractor shall receive approval from the Engineer before using the grout.

Before placing grout the concrete on which it is to be placed shall be thoroughly cleaned, roughened, and wetted with water to ensure proper bonding. The grout shall be kept continuously wet with water until a strength of 3,000 psi is attained.

Finishing Concrete Surfaces

Section 6-02.3(14) is supplemented with the following:

(June 26, 2000)
General Requirements for Concrete Surface Finishes Produced by Form Liners
Horizontal and vertical joints shall be spliced in accordance with the manufacturer's printed instructions. A copy of these printed instructions shall be submitted to the Engineer prior to placement of the form liners. The Contractor shall not place concrete against the form liners until receiving the Engineer's approval of the forms and splices.

Horizontal splicing of ABS and plastic form liners to achieve the required height is not permitted and there shall be no horizontal joints. The concrete formed with ABS and plastic form liners shall be given a light sandblast to remove the glossy finish.

INFORMATIONAL COPY ONLY NOT FOR BIDDING PURPOSES

Side forms, traffic barrier forms, and pedestrian barrier forms using these form liners may be removed after 24 hours provided a water reducing admixture approved by the Engineer is used in the concrete, and the concrete reaches 1,400 psi minimum compressive strength before form removal. Concrete in load supporting forms utilizing these form liners shall be cured in accordance with Section 6-02.3(17)N. Once the forms are removed, the Contractor shall treat the joint areas by patching or light sandblasting as required by the Engineer to ensure that the joints are not visible.

Form liners shall be cleaned, reconditioned, and repaired before each use. Form liners with repairs, patches, or defects which, in the opinion of the Engineer, would result in adverse effects to the concrete finish shall not be used.

Care shall be taken to ensure uniformity of color throughout the textured surface. A change in form release agent will not be allowed.

All surfaces formed by the form liner shall also receive a Class 2 surface finish. Form ties shall be a type that leaves a clean hole when removed. All spalls and form tie holes shall be filled as specified for a Class 2 surface finish.

(June 26, 2000)
Fractured Fin Finish
Form liners shall be placed with fins and joints normal to grade for barrier applications and vertical (or as shown in the Plans) for other applications. Horizontal joints in the elastomeric form liners are permitted on surfaces greater than 8 feet in height provided that the minimum form liner panel dimension is 8 feet.

Formwork Accessories

Section 6-02.3(17)H is supplemented with the following:

(******)
The Contractor shall install two (2) Hoist Rings in each abutment as detailed in the plans. The Hoist Ring inserts shall be installed near the curtain wall connection of each abutment, as staked by the Engineer, prior to form placement for inspection purposes. After curing and form removal, the Contractor shall install hoist rings and one wire rope on each abutment. The wire rope shall be between ¼" – 3/8" Diameter, steel core. Wire Rope shall be installed with approximately 1' of sag at the center of each abutment prior to wire rope clip attachment. Wire Rope will be used by the Contracting Agency for bridge inspection purposes in the future.

Bridge Year shall be placed on back of Curtain Wall per WSDOT Standard Plan E-1. Bridge year will not be required on the face of Traffic Barrier.

Grout for Anchor Bolts and Bridge Bearings

Section 6-02.3(20) is supplemented with the following:

(June 26, 2000)
Grout placed at the following locations shall conform to the requirements of this section.

*** Elastomeric bearing pad grout pad ***

INFORMATIONAL COPY ONLY, NOT FOR BIDDING PURPOSES

Measurement

Section 6-02.4 is supplemented with the following:

(August 10, 2010)

"Superstructure – Bridge #399, W-NW Road" contains the following approximate quantities of materials and work:

*** Epoxy-Coated St. Reinf. Bar	500	LB.
St. Reinf. Bar	458	LB
Conc. Class 4000D	19.2	C.Y.
W35DG Prestressed Conc. Girder	321	L.F.
Chain Link Fence Type 6'-6" Height	134	L.F.
Pavement Armor	56	L.F.
Elastomeric Bearing Pad	10	EACH
Elastomeric Girder Stop Pad	20	EACH
Beveled Sole Plate	10	EACH
Embedded Steel Plate	10	EACH
Traffic Barrier – 42" F-Shape	136	L.F.
Conduit Pipe 2 In. Diam.	136	L.F.
Butyl Rubber Mat	240	S.F.***

The quantities are listed only for the convenience of the Contractor in determining the volume of work involved and are not guaranteed to be accurate. The prospective bidders shall verify these quantities before submitting a bid. No adjustments other than for approved changes will be made in the lump sum contract price for *** Superstructure – Bridge #399, W-NW Road *** even though the actual quantities required may deviate from those listed.

(******)

"Conc. Class _____" shall also include materials and work to install the following:

Hoist Rings and Inserts	4	EACH
Wire Rope	65	L.F.
Gravel Backfill for Drains	18	C.Y.
Underdrain Pipe – 6 In. Diam.	80	L.F.
Weep Holes and Cover Fabric	6	EACH

The quantities are listed only for the convenience of the Contractor in determining the volume of work involved and are not guaranteed to be accurate. The prospective bidders shall verify these quantities before submitting a bid.

Payment

The first bid item under Section 6-02.5 is supplemented with the following:

(******)

All costs in connection with producing 'Fractured Fin' finish on concrete surfaces, Hoist Rings, wire rope, gravel backfill for drains, underdrain pipe, weep holes, and cover fabric as specified shall be included in the unit contract price per cubic yard for "Conc. Class 4000 for Abutment Footing and Walls". If the concrete is to be paid for other than by class of concrete then the costs shall be included in the applicable adjacent item of work.

INFORMATIONAL COPY ONLY, NOT FOR BIDDING PURPOSES

The third bid item under Section 6-02.5 is supplemented with the following:

(June 26, 2000)
All costs in connection with *** W35DG Prestressed Conc. Girder, Conc. Class 4000D, elastomeric bearing pads, elastomeric girder stop pads, Embedded plates, Pavement Armor, beveled sole plate, reinforcing bar, chain link fence Type 6'-6" Height, Traffic Barrier – 42" F-Shape, Conduit Pipe 2 In. Diam., and Fractured Finish *** shall be included in the lump sum contract price for *** "Superstructure – Bridge #399, W-NW Road" ***.

(June 26, 2000)
Bridge and Structure Minor Items

For the purpose of payment, such bridge and structure items as *** grout, nosing angles, weld ties, dowels, butyl rubber sheeting, polystyrene, galvanizing, adhesives, sand, wire clips, saddles, nuts and bolts ***, etc., for which there is no pay item included in the proposal, are considered as bridge and structures minor items. All costs in connection with furnishing and installing these bridge and structures minor items as shown and noted in the Plans and as outlined in these specifications and in the Standard Specifications shall be included in the lump sum contract price for *** "Superstructure – Bridge #399, W-NW Road" ***.

(June 26, 2000)
No additional compensation will be made by reason of any delay or other expense to the Contractor caused by coordination with the utility company or by installing utility company furnished items. However, any unavoidable delays to the Contractor caused by coordination with the utility company or resulting from installing utility company furnished items will be adjusted in accordance with Section 1-08.8.

BRIDGE RAILINGS

Materials

Section 6-06.2 is supplemented with the following:

(March 6, 2000)
Epoxy resin shall conform to Section 9-26.1.

Construction Requirements

Metal Railings

Section 6-06.3(2) is supplemented with the following:

(March 6, 2000)
Bridge Railing Type Chain Link Fence
The post blockouts shall be formed with a steel sleeve of the diameter and thickness specified in the Plans. The steel sleeve shall be galvanized after fabrication in accordance with AASHTO M 111. The Contractor shall fill the bottom portion of the railing post with expanded polystyrene as shown in the Plans.

INFORMATIONAL COPY ONLY, NOT FOR BIDDING PURPOSES

The Contractor shall install the steel posts in the post blockouts as shown in the Plans. The posts shall be installed vertically, set in position with epoxy resin, and braced to maintain the vertical position until the epoxy resin hardens.

Longitudinal members shall be connected to the steel posts as shown in the Plans.

The Contractor shall install the chain link fence fabric in accordance with Section 8-12.3(1)D, except as otherwise noted. The chain link fence fabric shall be fastened to the posts and longitudinal members at a maximum spacing of 14 inches.

Payment

Section 6-06.5 is supplemented with the following:

(March 6, 2000)
All costs in connection with constructing Bridge Railing Type *** 6' 6" Height *** shall be included in the *** lump sum contract price for "Superstructure – Bridge #399, W-NW Road" ***.

(August 4, 2014)
Standard Plans

The State of Washington Standard Plans for Road, Bridge and Municipal Construction M21-01 transmitted under Publications Transmittal No. PT 14-046, effective August 4, 2014 is made a part of this contract.

INFORMATIONAL COPY ONLY, NOT FOR BIDDING PURPOSES

1
2
3
4
5
6
7

INFORMATIONAL COPY ONLY, NOT FOR BIDDING PURPOSES

PROPOSAL

To: Board of County Commissioners
Grant County, Washington

Date:_____, 2015

This certifies that the undersigned has examined the location of **BRIDGE #399, W-NW BRIDGE REPLACEMENT PROJECT, CRP 13-02, in Grant County, Washington,** and that the plans, specifications and contract governing the work embraced in the improvement and the method by which payment will be made for said work is understood. The undersigned hereby proposes to undertake and complete the work embraced in this improvement, or as much thereof as can be completed with the money available in accordance with said plans, specifications and contract and at the following schedule of rates and prices.

BRIDGE #399, W-NW BRIDGE REPLACEMENT PROJECT

Note: Unit prices for all items, all extensions, and total amount must be shown. Please type or use ink. Please initial all changes.

Item No.	Plan Quantity	Item Description	Price per Unit* Dollars . Cents	Total Amount Dollars . Cents
PREPARATION				
1	1 Lump Sum	Mobilization	At ////////./////. Per Lump Sum	.
2	1 Lump Sum	Notification	At ////////./////. Per Lump Sum	.
3	1 Lump Sum	Clearing and Grubbing	At ////////./////. Per Lump Sum	.
4	1 Lump Sum	Removal of Existing Bridge	At ////////./////. Per Lump Sum	.
GRADING				
5	191 C.Y.	Roadway Excavation	At . Per Cubic Yard	.
6	4,314 C.Y.	Embankment Compaction	At . Per Cubic Yard	.
7	6,000 C.Y.	Borrow Excavation Inc. Haul	At . Per Cubic Yard	.

INFORMATIONAL COPY ONLY, NOT FOR BIDDING PURPOSES

Item No.	Plan Quantity	Item Description	Price per Unit* Dollars . Cents	Total Amount Dollars . Cents
8	189 S.Y.	Construction Geotextile For Separation	At . Per Square Yard	.
SURFACING				
9	600 C.Y.	Crushed Surfacing Base Course	At . Per Cubic Yard	.
10	400 C.Y.	Crushed Surfacing Maintenance Rock	At . Per Cubic Yard	.
11	35 Ton	Commercial HMA Class ½" Incl. PG64-28 Paving Asphalt	At . Per Ton	.
STRUCTURE				
12	96 C.Y.	Structure Excavation Class "A" Inc. Haul	At . Per Cubic Yard	.
13	582 S. F.	Shoring or Extra Excavation Class "A"	At ////////./////. Per Square Foot	.
14	192 C.Y.	Gravel Backfill for Wall	At . Per Cubic Yard	.
15	9,838 Pounds	St. Reinf. Bar	At . Per Pound	.
16	51 C.Y.	Concrete Class 4000 for Abutment Footing and Walls	At . Per Cubic Yard	.
17	1 Lump Sum	Superstructure – Bridge #399, W-NW Road	At ////////./////. Per Lump Sum	.
18	1 Lump Sum	Temporary Bridge	At ////////./////. Per Lump Sum	.

INFORMATIONAL COPY ONLY, NOT FOR BIDDING PURPOSES

Item No.	Plan Quantity	Item Description	Price per Unit* Dollars . Cents	Total Amount Dollars . Cents
TRAFFIC				
19	2 Each	Beam Guardrail Transition Section Type 10	At . Per Each	.
20	2 Each	Beam Guardrail Transition Section Type 11	At . Per Each	.
21	4 Each	Beam Guardrail SRT Flared Terminal	At . Per Each	.
22	1 Lump Sum	Permanent Signing	At ////////./////. Per Lump Sum	.
23	1 Lump Sum	Project Temporary Traffic Control	At ////////./////. Per Lump Sum	.
OTHER ITEMS				
24	100 Lin. Ft.	Extruded Curb Type 2	At ////////./////. Per Linear Foot	.
25	1 Lump Sum	Spill Prevention, Control, and Countermeasure (SPCC) Plan	At ////////./////. Per Lump Sum	.
26	1 Lump Sum	Trimming and Cleanup	At ////////./////. Per Lump Sum	.
27	0.50 Acre	Seeding, Fertilizing and Mulching, With Dry Land Mix	At ////////./////. Acre	.
28	-$1.00 Est.	Minor Change	At ////////./////. Est.	-$1.00

PROJECT Total	.

INFORMATIONAL COPY ONLY, NOT FOR BIDDING PURPOSES

Failure to return this Declaration as part of the bid proposal package will make the bid nonresponsive and ineligible for award.

NON-COLLUSION DECLARATION

I, by signing the proposal, hereby declare, under penalty of perjury under the laws of the United States that the following statements are true and correct:

1. That the undersigned person(s), firm, association, or corporation has (have) not, either directly or indirectly, entered into any agreement, participated in any collusion, or otherwise taken any action in restraint of free competitive bidding in connection with the project for which this proposal is submitted.

2. **That by signing the signature page of this proposal, I am deemed to have signed and have agreed to the provisions of this declaration.**

NOTICE TO ALL BIDDERS

To report bid rigging activities call:

1-800-424-9071

The U.S. Department of Transportation (USDOT) operates the above toll-free "hotline" Monday through Friday, 8:00 a.m. to 5:00 p.m., Eastern Time. Anyone with knowledge of possible bid rigging, bidder collusion, or other fraudulent activities should use the "hotline" to report such activities.

The "hotline" is part of USDOT's continuing effort to identify and investigate highway construction contract fraud and abuse and is operated under the direction of the USDOT Inspector General. All information will be treated confidentially and caller anonymity will be respected.

Revised 6/14

From DOT Form 272-036I EF
07/2011

INFORMATIONAL COPY ONLY, NOT FOR BIDDING PURPOSES

Proposal – Signature Page

The bidder is hereby advised that by signature of this proposal he/she is deemed to have acknowledged all requirements and signed all certificates contained herein.

A proposal guaranty in an amount of five percent (5%) of the total bid, based upon the approximate estimate of quantities at the above prices and in the form as indicated below, is attached hereto:

Cash	☐	In the Amount of _____
Cashier's Check	☐	_____ Dollars
Certified Check	☐	($_____) Payable to the Grant County Treasurer
Proposal Bond	☐	In the Amount of 5% of the Bid

Receipt is hereby acknowledged of addendum(s) No.(s) ____, ____ & ____.

Signature of Authorized Official(s)

Proposal Must Be Signed →

_____

_____

Please Print Name of Authorized Official

Firm Name _____

Address _____

_____

_____

State of Washington Contractor's License No. _____

Federal ID No. _____

Note:

(1) This proposal form is not transferable and any alteration entered hereon without prior permission from the County Engineer will be cause for considering the proposal irregular and subsequent rejection of bid.

(2) Please refer to section 1-02.6 of the standard specifications, re:"Preparation of Proposal" or "Article 4" of the instructions to bidders for building construction jobs.

(3) Should it be necessary to modify this proposal either in writing or by electronic means, please make reference to the following proposal number in your communication: _____

Revised 8/95

INFORMATIONAL COPY ONLY, NOT FOR BIDDING PURPOSES

Statement of Contractor Qualifications

To: Board of County Commissioners
Grant County, Washington

Date: _____, 2015

RE: **BRIDGE #399, W-NW BRIDGE REPLACEMENT PROJECT, CRP 13-02**

I hereby maintain that I am a responsible bidder as contemplated by the policies of the State of Washington and Chapter 36.77 of the Revised Code of Washington.

1. My permanent business name and address is _____ which I have maintained for ____ years. My phone is (____)_____ Fax (____)_____
2. I have adequate plant equipment to expeditiously and properly perform the work contemplated for Grant County, Washington. **Description of work:** This contract provides for the replacement of an existing bridge on a county road in Grant County, WA, and includes removal of the existing bridge, providing a temporary bridge, roadway excavation, embankment compaction, crushed surfacing base course, top course, concrete class 4000 for abutment footings and walls, superstructure for Bridge #399, beam guardrail, and other work all in accordance with the attached Contract Plans, these Contract Provisions and the Standard Specifications. (Please list equipment to be used on this project. Attach list if necessary.)
   _____
   _____
3. I have adequate funds to promptly meet obligations incident to this work. (Provide bank, contact & phone.) a) _____
   b) _____ c) _____
4. I have adequate experience in this class of work and I am thoroughly familiar with the specifications used in this project. I have constructed the following similar improvements: (Provide project name, contact & phone.)
   a) _____
   b) _____
5. I have submitted and maintain annually a "Standard Questionnaire and Financial Statement" to the Washington State Department of Transportation (WSDOT): Yes ☐ No ☐ Region: _____
   WSDOT has determined: a) I am prequalified to _____
   _____ in the amount of _____.__
   b) I have failed to be prequalified for the following reasons: ___
   _____.

   The Contracting Agency may determine a prospective Bidder who is not prequalified to perform certain types of work within the financial and experience constraints determined by WSDOT to be not responsible and refuse to award a contract.

   The Board of County Commissioners shall proceed to award the contract to the lowest and best bidder but may reject any or all bids if in its opinion good cause exists therefor. (RCW 36.77.040)

I hereby certify that the above statements are true and accurate.

Very truly yours,

By: _____
(Print Name) _____
Company Name: _____
Address: _____
City, State, Zip: _____
Washington State Contractor's License No.: _____

Revised 4/02

INFORMATIONAL COPY ONLY, NOT FOR BIDDING PURPOSES

Bid Bond

KNOW ALL MEN BY THESE PRESENTS:

That we, _____, as Principal, and _____, as Surety, are held and firmly bound unto Grant County, Washington, as Obligee, in the penal sum of _____ Dollars ($_____) for the payment of which the Principal and Surety bind themselves, their heirs, executors, administrators, successors and assigns, jointly and severally, by these presents.

The condition of the obligation is such that if the Obligee shall make any award to the Principal for **BRIDGE #399, W-NW BRIDGE REPLACEMENT PROJECT, CRP 13-02,** located in Grant County, Washington, according to the terms of the proposal or bid made by the Principal therefor, and the Principal shall duly make and enter into a contract with the Obligee in accordance with the terms of said proposal or bid and award and shall give bond for the faithful performance thereof, with the Surety or Sureties approved by the Obligee; or if the principal shall, in case of failure so to do, pay and forfeit to the Obligee the penal amount of the deposit specified in the call for bids, then this obligation shall be null and void; otherwise it shall be and remain in full force and effect and the Surety shall forthwith pay and forfeit to the Obligee, as penalty and liquidated damages, the amount of this bond.

SIGNED, SEALED AND DATED THIS ____ DAY OF _____ , 2015

Principal _____

Surety _____

Attorney-in-Fact _____

INFORMATIONAL COPY ONLY, NOT FOR BIDDING PURPOSES

Grant County Public Works
124 Enterprise St. SE
Ephrata, WA. 98823

Local Agency Subcontractor List

Prepared in compliance with RCW 39.30.060 as amended

To Be Submitted with the Bid Proposal

Project Name: **BRIDGE #399, W-NW BRIDGE REPLACEMENT PROJECT**

Failure to list subcontractors who are proposed to perform the work of HVAC (heating, ventilation and air conditioning), plumbing, as described in Chapter 18.106 RCW, and electrical as described in Chapter 19.28 RCW, or naming more than one subcontractor to perform the same work will result in your bid being non-responsive and therefore void.

Subcontractor(s) that are proposed to perform the work of heating, ventilation and air conditioning, plumbing, as described in Chapter 18.106 RCW, and electrical as described in Chapter 19.28 RCW must be listed below. The work to be performed is to be listed below the subcontractor(s) name. The requirement to name the prime contract bidder's proposed HVAC, plumbing and electrical subcontractors applies only to proposed HVAC, plumbing, and electrical subcontractors who will contract directly with the prime contract bidder submitting the bid to the public entity.

If no subcontractor is listed below, the bidder acknowledges that it does not intend to use any subcontractor to perform those items of work.

Subcontractor Name _____
Work to be Performed _____
_____
_____
_____

Subcontractor Name _____
Work to be Performed _____
_____
_____
_____

Subcontractor Name _____
Work to be Performed _____
_____
_____
_____

Subcontractor Name _____
Work to be Performed _____
_____
_____
_____

Subcontractor Name _____
Work to be Performed _____
_____
_____
_____

Bidder's are notified that the opinion of the enforcement agency PVC or metal conduit, junction boxes, etc, are considered electrical equipment and must be installed by a licensed electrical contractor, even if the installation is for future use and no wiring or electric current is connected during the project.
A licensed electrical contractor must be listed to perform the work.

INFORMATIONAL COPY ONLY, NOT FOR BIDDING PURPOSES

CONTRACT

THIS AGREEMENT, between the Board of County Commissioners of Grant County, State of Washington, acting under and by virtue of Chapter 36.77 of the Revised Code of Washington, as amended, hereinafter called the County, and _____, for itself, its heirs, executors, administrators, successors and assigns, hereinafter called the Contractor.

WITNESSETH:

That in consideration of the payments, covenants, and agreements, hereinafter mentioned, and attached and made a part of this agreement, to be made and performed by the parties hereto, and the parties hereto covenant and agree as follows:

DESCRIPTION OF WORK:

1. The Contractor shall do all work and furnish all tools, materials, and equipment necessary to improve and complete **BRIDGE #399, W-NW BRIDGE REPLACEMENT PROJECT, CRP 13-02,** located in Grant County, Washington, as proposed in a bid opened **1:30 P.M., Tuesday, April 14, 2015** in accordance with and as described in the herein attached plans and standard specifications, and in full compliance with the terms, conditions, and stipulations herein set forth and attached, now referred to any by such reference incorporated herein and made part hereof as fully for all purposes as if here set forth at length, and shall perform any alterations in or additions to the work covered by this contract and every part thereof and any force account work may be ordered as provided in this contract and every part thereof.

2. The Contractor shall provide and be at the expense of all materials, labor, carriage, tools, implements and conveniences and things of every description that may be requisite for the transfer of materials and for constructing and completing the work provided for in this contract and every part thereof.

3. The County hereby promises and agrees with the Contractor to employ, and does employ the Contractor to provide the materials and to do and cause to be done the above described work and to complete and finish the same according to the attached plans and specifications and the terms and conditions herein contained, and hereby contracts to pay for the same according to the attached specifications and the schedule of unit or itemized prices hereto attached, at the time and in the manner and upon the conditions provided for in this contract and every part thereof. The County further agrees to employ the Contractor to perform any alterations in or additions to the work covered by this contract and every part thereof and any force account work that may be ordered and pay for same under the terms of this contract and the attached plans and specifications.

4. The Contractor for himself, and for his heirs, executors, administrators and assigns, and successors and assigns, does hereby agree to the full performance of all the covenants herein contained upon the part of the Contractor.

5. It is further provided that no liability shall attach to the County by reason of entering into this contract, except as expressly provided herein.

INFORMATIONAL COPY ONLY, NOT FOR BIDDING PURPOSES

IN WITNESS WHEREOF, the said Contractor has executed this instrument, and the said Board of County Commissioners of Grant County has caused this instrument to be executed by and in the name of said Board by its Members, duly attested by its Clerk, the day and year below written, and the seal of said Board to be hereunto affixed on said date.

____day of _____, 2015

_____
Signature

_____
Print Name

_____
Firm Name

_____
Address

_____
City State Zip

(____)_____
Phone

ATTEST:

_____
Clerk of the Board

APPROVED AS TO FORM:

____day of _____,2015

_____
Deputy Prosecuting Attorney

BOARD OF COUNTY COMMISSIONERS
OF GRANT COUNTY, WASHINGTON

Done this ____ day of _____, 2015

_____
Chair

_____
Member

_____
Member

INFORMATIONAL COPY ONLY, NOT FOR BIDDING PURPOSES

CONTRACT BOND

KNOW ALL MEN BY THESE PRESENTS:

That we, the undersigned, _____, as principal, and _____, a corporation organized and existing under the laws of the State of _____, as surety corporation, and qualified under the laws of the State of Washington to become surety upon bonds of contractors with municipal corporations, as surety, are jointly and severally held and firmly bound to Grant County, Washington, in the penal sum of _____ ($_____) for the payment of which sum on demand we bind ourselves and our successors, heirs, administrators or personal representatives, as the case may be.

This obligation is entered into in pursuance of the statutes of the State of Washington, the Ordinances of Grant County, Washington.

Dated at _____, Washington, this ____ day of _____, 2015.

The conditions of the above obligation are such that:

WHEREAS, on **April 14, 2015**, the Board of County Commissioners of said Grant County has let or is about to let to the Principal, a certain contract, the said contract providing for the improvement of **BRIDGE #399, W-NW BRIDGE REPLACEMENT PROJECT, CRP 13-02,** located in Grant County, Washington, (which contract is referred to herein and is made a part hereof as though attached hereto), and

WHEREAS, the said Principal has accepted, or is about to accept, the said contract, and undertake to perform the work therein provided for in the manner and within the time set forth;

NOW, THEREFORE, if the said Principal shall faithfully perform all of the provisions of said contract in the manner and within the time therein set forth or within such extensions of time as may be granted under said contract, and shall pay all laborers, mechanics, subcontractors and material men, and all persons who shall supply said Principal or subcontractors with provisions and supplies for the carrying on of said work, and shall hold said Grant County harmless from any loss or damage occasioned to any person or property by reason of any carelessness or negligence on the part of said Principal, or any subcontractor in the performance of said work and shall indemnify and hold Grant County harmless from any damage or expense by reason of failure of performance as specified in said contract or from defects appearing or developing in the material or workmanship provided or performed under said contract, and until the same is accepted, then and in that event this obligation shall be void but otherwise it shall be and remain in full force and effect.

Countersigned:

_____ _____

Licensed Agent/Surety Co. Principal

_____ _____

Attorney-in-Fact, Surety

_____ Approved as to form:

(_____)_____ _____, 2015

Firm, Street Address (No P.O. Box), Phone of Local Office of Agent Deputy Prosecuting Attorney

_____

Deputy Prosecuting Attorney

INFORMATIONAL COPY ONLY, NOT FOR BIDDING PURPOSES

INFORMATIONAL COPY ONLY, NOT FOR BIDDING PURPOSES

REQUIRED CONTRACT PROVISIONS FEDERAL-AID CONSTRUCTION CONTRACTS
FHWA-1273 -- Revised May 1, 2012

I. General
II. Nondiscrimination
III. Nonsegregated Facilities
IV. Davis-Bacon and Related Act Provisions
V. Contract Work Hours and Safety Standards Act Provisions
VI. Subletting or Assigning the Contract
VII. Safety: Accident Prevention
VIII. False Statements Concerning Highway Projects
IX. Implementation of Clean Air Act and Federal Water Pollution Control Act
X. Compliance with Governmentwide Suspension and Debarment Requirements
XI. Certification Regarding Use of Contract Funds for Lobbying

ATTACHMENTS

A. Employment and Materials Preference for Appalachian Development Highway System or Appalachian Local Access Road Contracts (included in Appalachian contracts only)

I. GENERAL

1. Form FHWA-1273 must be physically incorporated in each construction contract funded under Title 23 (excluding emergency contracts solely intended for debris removal). The contractor (or subcontractor) must insert this form in each subcontract and further require its inclusion in all lower tier subcontracts (excluding purchase orders, rental agreements and other agreements for supplies or services).

The applicable requirements of Form FHWA-1273 are incorporated by reference for work done under any purchase order, rental agreement or agreement for other services. The prime contractor shall be responsible for compliance by any subcontractor, lower-tier subcontractor or service provider.

Form FHWA-1273 must be included in all Federal-aid design-build contracts, in all subcontracts and in lower tier subcontracts (excluding subcontracts for design services, purchase orders, rental agreements and other agreements for supplies or services). The design-builder shall be responsible for compliance by any subcontractor, lower-tier subcontractor or service provider.

Contracting agencies may reference Form FHWA-1273 in bid proposal or request for proposal documents, however, the Form FHWA-1273 must be physically incorporated (not referenced) in all contracts, subcontracts and lower-tier subcontracts (excluding purchase orders, rental agreements and other agreements for supplies or services related to a construction contract).

2. Subject to the applicability criteria noted in the following sections, these contract provisions shall apply to all work performed on the contract by the contractor's own organization and with

INFORMATIONAL COPY ONLY, NOT FOR BIDDING PURPOSES

the assistance of workers under the contractor's immediate superintendence and to all work performed on the contract by piecework, station work, or by subcontract.

3. A breach of any of the stipulations contained in these Required Contract Provisions may be sufficient grounds for withholding of progress payments, withholding of final payment, termination of the contract, suspension / debarment or any other action determined to be appropriate by the contracting agency and FHWA.

4. Selection of Labor: During the performance of this contract, the contractor shall not use convict labor for any purpose within the limits of a construction project on a Federal-aid highway unless it is labor performed by convicts who are on parole, supervised release, or probation. The term Federal-aid highway does not include roadways functionally classified as local roads or rural minor collectors.

II. NONDISCRIMINATION

The provisions of this section related to 23 CFR Part 230 are applicable to all Federal-aid construction contracts and to all related construction subcontracts of $10,000 or more. The provisions of 23 CFR Part 230 are not applicable to material supply, engineering, or architectural service contracts.

In addition, the contractor and all subcontractors must comply with the following policies: Executive Order 11246, 41 CFR 60, 29 CFR 1625-1627, Title 23 USC Section 140, the Rehabilitation Act of 1973, as amended (29 USC 794), Title VI of the Civil Rights Act of 1964, as amended, and related regulations including 49 CFR Parts 21, 26 and 27; and 23 CFR Parts 200, 230, and 633.

The contractor and all subcontractors must comply with: the requirements of the Equal Opportunity Clause in 41 CFR 60-1.4(b) and, for all construction contracts exceeding $10,000, the Standard Federal Equal Employment Opportunity Construction Contract Specifications in 41 CFR 60-4.3.

Note: The U.S. Department of Labor has exclusive authority to determine compliance with Executive Order 11246 and the policies of the Secretary of Labor including 41 CFR 60, and 29 CFR 1625-1627. The contracting agency and the FHWA have the authority and the responsibility to ensure compliance with Title 23 USC Section 140, the Rehabilitation Act of 1973, as amended (29 USC 794), and Title VI of the Civil Rights Act of 1964, as amended, and related regulations including 49 CFR Parts 21, 26 and 27; and 23 CFR Parts 200, 230, and 633.

The following provision is adopted from 23 CFR 230, Appendix A, with appropriate revisions to conform to the U.S. Department of Labor (US DOL) and FHWA requirements.

1. **Equal Employment Opportunity:** Equal employment opportunity (EEO) requirements not to discriminate and to take affirmative action to assure equal opportunity as set forth under laws, executive orders, rules, regulations (28 CFR 35, 29 CFR 1630, 29 CFR 1625-1627, 41 CFR 60 and 49 CFR 27) and orders of the Secretary of Labor as modified by the provisions prescribed herein, and imposed pursuant to 23 U.S.C. 140 shall constitute the EEO and specific affirmative action standards for the contractor's project activities under this contract. The provisions of the Americans with Disabilities Act of 1990 (42 U.S.C. 12101 et seq.) set forth under 28 CFR 35 and 29 CFR 1630 are incorporated by reference in this contract. In the execution of this

INFORMATIONAL COPY ONLY, NOT FOR BIDDING PURPOSES

contract, the contractor agrees to comply with the following minimum specific requirement activities of EEO:

a. The contractor will work with the contracting agency and the Federal Government to ensure that it has made every good faith effort to provide equal opportunity with respect to all of its terms and conditions of employment and in their review of activities under the contract.

b. The contractor will accept as its operating policy the following statement:

"It is the policy of this Company to assure that applicants are employed, and that employees are treated during employment, without regard to their race, religion, sex, color, national origin, age or disability. Such action shall include: employment, upgrading, demotion, or transfer; recruitment or recruitment advertising; layoff or termination; rates of pay or other forms of compensation; and selection for training, including apprenticeship, pre-apprenticeship, and/or on-the-job training."

2. EEO Officer: The contractor will designate and make known to the contracting officers an EEO Officer who will have the responsibility for and must be capable of effectively administering and promoting an active EEO program and who must be assigned adequate authority and responsibility to do so.

3. Dissemination of Policy: All members of the contractor's staff who are authorized to hire, supervise, promote, and discharge employees, or who recommend such action, or who are substantially involved in such action, will be made fully cognizant of, and will implement, the contractor's EEO policy and contractual responsibilities to provide EEO in each grade and classification of employment. To ensure that the above agreement will be met, the following actions will be taken as a minimum:

a. Periodic meetings of supervisory and personnel office employees will be conducted before the start of work and then not less often than once every six months, at which time the contractor's EEO policy and its implementation will be reviewed and explained. The meetings will be conducted by the EEO Officer.

b. All new supervisory or personnel office employees will be given a thorough indoctrination by the EEO Officer, covering all major aspects of the contractor's EEO obligations within thirty days following their reporting for duty with the contractor.

c. All personnel who are engaged in direct recruitment for the project will be instructed by the EEO Officer in the contractor's procedures for locating and hiring minorities and women.

d. Notices and posters setting forth the contractor's EEO policy will be placed in areas readily accessible to employees, applicants for employment and potential employees.

e. The contractor's EEO policy and the procedures to implement such policy will be brought to the attention of employees by means of meetings, employee handbooks, or other appropriate means.

4. Recruitment: When advertising for employees, the contractor will include in all advertisements for employees the notation: "An Equal Opportunity Employer." All such advertisements will be placed in publications having a large circulation among minorities and women in the area from which the project work force would normally be derived.

INFORMATIONAL COPY ONLY, NOT FOR BIDDING PURPOSES

a. The contractor will, unless precluded by a valid bargaining agreement, conduct systematic and direct recruitment through public and private employee referral sources likely to yield qualified minorities and women. To meet this requirement, the contractor will identify sources of potential minority group employees, and establish with such identified sources procedures whereby minority and women applicants may be referred to the contractor for employment consideration.

b. In the event the contractor has a valid bargaining agreement providing for exclusive hiring hall referrals, the contractor is expected to observe the provisions of that agreement to the extent that the system meets the contractor's compliance with EEO contract provisions. Where implementation of such an agreement has the effect of discriminating against minorities or women, or obligates the contractor to do the same, such implementation violates Federal nondiscrimination provisions.

c. The contractor will encourage its present employees to refer minorities and women as applicants for employment. Information and procedures with regard to referring such applicants will be discussed with employees.

5. Personnel Actions: Wages, working conditions, and employee benefits shall be established and administered, and personnel actions of every type, including hiring, upgrading, promotion, transfer, demotion, layoff, and termination, shall be taken without regard to race, color, religion, sex, national origin, age or disability. The following procedures shall be followed:

a. The contractor will conduct periodic inspections of project sites to insure that working conditions and employee facilities do not indicate discriminatory treatment of project site personnel.

b. The contractor will periodically evaluate the spread of wages paid within each classification to determine any evidence of discriminatory wage practices.

c. The contractor will periodically review selected personnel actions in depth to determine whether there is evidence of discrimination. Where evidence is found, the contractor will promptly take corrective action. If the review indicates that the discrimination may extend beyond the actions reviewed, such corrective action shall include all affected persons.

d. The contractor will promptly investigate all complaints of alleged discrimination made to the contractor in connection with its obligations under this contract, will attempt to resolve such complaints, and will take appropriate corrective action within a reasonable time. If the investigation indicates that the discrimination may affect persons other than the complainant, such corrective action shall include such other persons. Upon completion of each investigation, the contractor will inform every complainant of all of their avenues of appeal.

6. Training and Promotion:

a. The contractor will assist in locating, qualifying, and increasing the skills of minorities and women who are applicants for employment or current employees. Such efforts should be aimed at developing full journey level status employees in the type of trade or job classification involved.

INFORMATIONAL COPY ONLY, NOT FOR BIDDING PURPOSES

b. Consistent with the contractor's work force requirements and as permissible under Federal and State regulations, the contractor shall make full use of training programs, i.e., apprenticeship, and on-the-job training programs for the geographical area of contract performance. In the event a special provision for training is provided under this contract, this subparagraph will be superseded as indicated in the special provision. The contracting agency may reserve training positions for persons who receive welfare assistance in accordance with 23 U.S.C. 140(a).

c. The contractor will advise employees and applicants for employment of available training programs and entrance requirements for each.

d. The contractor will periodically review the training and promotion potential of employees who are minorities and women and will encourage eligible employees to apply for such training and promotion.

7. Unions: If the contractor relies in whole or in part upon unions as a source of employees, the contractor will use good faith efforts to obtain the cooperation of such unions to increase opportunities for minorities and women. Actions by the contractor, either directly or through a contractor's association acting as agent, will include the procedures set forth below:

a. The contractor will use good faith efforts to develop, in cooperation with the unions, joint training programs aimed toward qualifying more minorities and women for membership in the unions and increasing the skills of minorities and women so that they may qualify for higher paying employment.

b. The contractor will use good faith efforts to incorporate an EEO clause into each union agreement to the end that such union will be contractually bound to refer applicants without regard to their race, color, religion, sex, national origin, age or disability.

c. The contractor is to obtain information as to the referral practices and policies of the labor union except that to the extent such information is within the exclusive possession of the labor union and such labor union refuses to furnish such information to the contractor, the contractor shall so certify to the contracting agency and shall set forth what efforts have been made to obtain such information.

d. In the event the union is unable to provide the contractor with a reasonable flow of referrals within the time limit set forth in the collective bargaining agreement, the contractor will, through independent recruitment efforts, fill the employment vacancies without regard to race, color, religion, sex, national origin, age or disability; making full efforts to obtain qualified and/or qualifiable minorities and women. The failure of a union to provide sufficient referrals (even though it is obligated to provide exclusive referrals under the terms of a collective bargaining agreement) does not relieve the contractor from the requirements of this paragraph. In the event the union referral practice prevents the contractor from meeting the obligations pursuant to Executive Order 11246, as amended, and these special provisions, such contractor shall immediately notify the contracting agency.

8. Reasonable Accommodation for Applicants / Employees with Disabilities: The contractor must be familiar with the requirements for and comply with the Americans with Disabilities Act and all rules and regulations established there under. Employers must provide reasonable accommodation in all employment activities unless to do so would cause an undue hardship.

INFORMATIONAL COPY ONLY; NOT FOR BIDDING PURPOSES

9. Selection of Subcontractors, Procurement of Materials and Leasing of Equipment: The contractor shall not discriminate on the grounds of race, color, religion, sex, national origin, age or disability in the selection and retention of subcontractors, including procurement of materials and leases of equipment. The contractor shall take all necessary and reasonable steps to ensure nondiscrimination in the administration of this contract.

a. The contractor shall notify all potential subcontractors and suppliers and lessors of their EEO obligations under this contract.

b. The contractor will use good faith efforts to ensure subcontractor compliance with their EEO obligations.

10. Assurance Required by 49 CFR 26.13(b):

a. The requirements of 49 CFR Part 26 and the State DOT's U.S. DOT-approved DBE program are incorporated by reference.

b. The contractor or subcontractor shall not discriminate on the basis of race, color, national origin, or sex in the performance of this contract. The contractor shall carry out applicable requirements of 49 CFR Part 26 in the award and administration of DOT-assisted contracts. Failure by the contractor to carry out these requirements is a material breach of this contract, which may result in the termination of this contract or such other remedy as the contracting agency deems appropriate.

11. Records and Reports: The contractor shall keep such records as necessary to document compliance with the EEO requirements. Such records shall be retained for a period of three years following the date of the final payment to the contractor for all contract work and shall be available at reasonable times and places for inspection by authorized representatives of the contracting agency and the FHWA.

a. The records kept by the contractor shall document the following:

(1) The number and work hours of minority and non-minority group members and women employed in each work classification on the project;

(2) The progress and efforts being made in cooperation with unions, when applicable, to increase employment opportunities for minorities and women; and

(3) The progress and efforts being made in locating, hiring, training, qualifying, and upgrading minorities and women;

b. The contractors and subcontractors will submit an annual report to the contracting agency each July for the duration of the project, indicating the number of minority, women, and non-minority group employees currently engaged in each work classification required by the contract work. This information is to be reported on Form FHWA-1391. The staffing data should represent the project work force on board in all or any part of the last payroll period preceding the end of July. If on-the-job training is being required by special provision, the contractor will be required to collect and report training data. The employment data should reflect the work force on board during all or any part of the last payroll period preceding the end of July.

INFORMATIONAL COPY ONLY, NOT FOR BIDDING PURPOSES

III. NONSEGREGATED FACILITIES

This provision is applicable to all Federal-aid construction contracts and to all related construction subcontracts of $10,000 or more.

The contractor must ensure that facilities provided for employees are provided in such a manner that segregation on the basis of race, color, religion, sex, or national origin cannot result. The contractor may neither require such segregated use by written or oral policies nor tolerate such use by employee custom. The contractor's obligation extends further to ensure that its employees are not assigned to perform their services at any location, under the contractor's control, where the facilities are segregated. The term "facilities" includes waiting rooms, work areas, restaurants and other eating areas, time clocks, restrooms, washrooms, locker rooms, and other storage or dressing areas, parking lots, drinking fountains, recreation or entertainment areas, transportation, and housing provided for employees. The contractor shall provide separate or single-user restrooms and necessary dressing or sleeping areas to assure privacy between sexes.

IV. DAVIS-BACON AND RELATED ACT PROVISIONS

This section is applicable to all Federal-aid construction projects exceeding $2,000 and to all related subcontracts and lower-tier subcontracts (regardless of subcontract size). The requirements apply to all projects located within the right-of-way of a roadway that is functionally classified as Federal-aid highway. This excludes roadways functionally classified as local roads or rural minor collectors, which are exempt. Contracting agencies may elect to apply these requirements to other projects.

The following provisions are from the U.S. Department of Labor regulations in 29 CFR 5.5 "Contract provisions and related matters" with minor revisions to conform to the FHWA-1273 format and FHWA program requirements.

1. Minimum wages

a. All laborers and mechanics employed or working upon the site of the work, will be paid unconditionally and not less often than once a week, and without subsequent deduction or rebate on any account (except such payroll deductions as are permitted by regulations issued by the Secretary of Labor under the Copeland Act (29 CFR part 3)), the full amount of wages and bona fide fringe benefits (or cash equivalents thereof) due at time of payment computed at rates not less than those contained in the wage determination of the Secretary of Labor which is attached hereto and made a part hereof, regardless of any contractual relationship which may be alleged to exist between the contractor and such laborers and mechanics.

Contributions made or costs reasonably anticipated for bona fide fringe benefits under section 1(b)(2) of the Davis-Bacon Act on behalf of laborers or mechanics are considered wages paid to such laborers or mechanics, subject to the provisions of paragraph 1.d. of this section; also, regular contributions made or costs incurred for more than a weekly period (but not less often than quarterly) under plans, funds, or programs which cover the particular weekly period, are deemed to be constructively made or incurred during such weekly period. Such laborers and

INFORMATIONAL COPY ONLY, NOT FOR BIDDING PURPOSES

mechanics shall be paid the appropriate wage rate and fringe benefits on the wage determination for the classification of work actually performed, without regard to skill, except as provided in 29 CFR 5.5(a)(4). Laborers or mechanics performing work in more than one classification may be compensated at the rate specified for each classification for the time actually worked therein: Provided, That the employer's payroll records accurately set forth the time spent in each classification in which work is performed. The wage determination (including any additional classification and wage rates conformed under paragraph 1.b. of this section) and the Davis-Bacon poster (WH–1321) shall be posted at all times by the contractor and its subcontractors at the site of the work in a prominent and accessible place where it can be easily seen by the workers.

b. (1) The contracting officer shall require that any class of laborers or mechanics, including helpers, which is not listed in the wage determination and which is to be employed under the contract shall be classified in conformance with the wage determination. The contracting officer shall approve an additional classification and wage rate and fringe benefits therefore only when the following criteria have been met:

(i) The work to be performed by the classification requested is not performed by a classification in the wage determination; and

(ii) The classification is utilized in the area by the construction industry; and

(iii) The proposed wage rate, including any bona fide fringe benefits, bears a reasonable relationship to the wage rates contained in the wage determination.

(2) If the contractor and the laborers and mechanics to be employed in the classification (if known), or their representatives, and the contracting officer agree on the classification and wage rate (including the amount designated for fringe benefits where appropriate), a report of the action taken shall be sent by the contracting officer to the Administrator of the Wage and Hour Division, Employment Standards Administration, U.S. Department of Labor, Washington, DC 20210. The Administrator, or an authorized representative, will approve, modify, or disapprove every additional classification action within 30 days of receipt and so advise the contracting officer or will notify the contracting officer within the 30-day period that additional time is necessary.

(3) In the event the contractor, the laborers or mechanics to be employed in the classification or their representatives, and the contracting officer do not agree on the proposed classification and wage rate (including the amount designated for fringe benefits, where appropriate), the contracting officer shall refer the questions, including the views of all interested parties and the recommendation of the contracting officer, to the Wage and Hour Administrator for determination. The Wage and Hour Administrator, or an authorized representative, will issue a determination within 30 days of receipt and so advise the contracting officer or will notify the contracting officer within the 30-day period that additional time is necessary.

(4) The wage rate (including fringe benefits where appropriate) determined pursuant to paragraphs 1.b.(2) or 1.b.(3) of this section, shall be paid to all workers performing work in the classification under this contract from the first day on which work is performed in the classification.

INFORMATIONAL COPY ONLY NOT FOR BIDDING PURPOSES

c. Whenever the minimum wage rate prescribed in the contract for a class of laborers or mechanics includes a fringe benefit which is not expressed as an hourly rate, the contractor shall either pay the benefit as stated in the wage determination or shall pay another bona fide fringe benefit or an hourly cash equivalent thereof.

d. If the contractor does not make payments to a trustee or other third person, the contractor may consider as part of the wages of any laborer or mechanic the amount of any costs reasonably anticipated in providing bona fide fringe benefits under a plan or program, Provided, That the Secretary of Labor has found, upon the written request of the contractor, that the applicable standards of the Davis-Bacon Act have been met. The Secretary of Labor may require the contractor to set aside in a separate account assets for the meeting of obligations under the plan or program.

2. Withholding

The contracting agency shall upon its own action or upon written request of an authorized representative of the Department of Labor, withhold or cause to be withheld from the contractor under this contract, or any other Federal contract with the same prime contractor, or any other federally-assisted contract subject to Davis-Bacon prevailing wage requirements, which is held by the same prime contractor, so much of the accrued payments or advances as may be considered necessary to pay laborers and mechanics, including apprentices, trainees, and helpers, employed by the contractor or any subcontractor the full amount of wages required by the contract. In the event of failure to pay any laborer or mechanic, including any apprentice, trainee, or helper, employed or working on the site of the work, all or part of the wages required by the contract, the contracting agency may, after written notice to the contractor, take such action as may be necessary to cause the suspension of any further payment, advance, or guarantee of funds until such violations have ceased.

3. Payrolls and basic records

a. Payrolls and basic records relating thereto shall be maintained by the contractor during the course of the work and preserved for a period of three years thereafter for all laborers and mechanics working at the site of the work. Such records shall contain the name, address, and social security number of each such worker, his or her correct classification, hourly rates of wages paid (including rates of contributions or costs anticipated for bona fide fringe benefits or cash equivalents thereof of the types described in section 1(b)(2)(B) of the Davis-Bacon Act), daily and weekly number of hours worked, deductions made and actual wages paid. Whenever the Secretary of Labor has found under 29 CFR 5.5(a)(1)(iv) that the wages of any laborer or mechanic include the amount of any costs reasonably anticipated in providing benefits under a plan or program described in section 1(b)(2)(B) of the Davis-Bacon Act, the contractor shall maintain records which show that the commitment to provide such benefits is enforceable, that the plan or program is financially responsible, and that the plan or program has been communicated in writing to the laborers or mechanics affected, and records which show the costs anticipated or the actual cost incurred in providing such benefits. Contractors employing apprentices or trainees under approved programs shall maintain written evidence of the registration of apprenticeship programs and certification of trainee programs, the registration of the apprentices and trainees, and the ratios and wage rates prescribed in the applicable programs.

INFORMATIONAL COPY ONLY, NOT FOR BIDDING PURPOSES

b. (1) The contractor shall submit weekly for each week in which any contract work is performed a copy of all payrolls to the contracting agency. The payrolls submitted shall set out accurately and completely all of the information required to be maintained under 29 CFR 5.5(a)(3)(i), except that full social security numbers and home addresses shall not be included on weekly transmittals. Instead the payrolls shall only need to include an individually identifying number for each employee (e.g. , the last four digits of the employee's social security number). The required weekly payroll information may be submitted in any form desired. Optional Form WH–347 is available for this purpose from the Wage and Hour Division Web site at http://www.dol.gov/esa/whd/forms/wh347instr.htm or its successor site. The prime contractor is responsible for the submission of copies of payrolls by all subcontractors. Contractors and subcontractors shall maintain the full social security number and current address of each covered worker, and shall provide them upon request to the contracting agency for transmission to the State DOT, the FHWA or the Wage and Hour Division of the Department of Labor for purposes of an investigation or audit of compliance with prevailing wage requirements. It is not a violation of this section for a prime contractor to require a subcontractor to provide addresses and social security numbers to the prime contractor for its own records, without weekly submission to the contracting agency..

(2) Each payroll submitted shall be accompanied by a "Statement of Compliance," signed by the contractor or subcontractor or his or her agent who pays or supervises the payment of the persons employed under the contract and shall certify the following:

(i) That the payroll for the payroll period contains the information required to be provided under §5.5 (a)(3)(ii) of Regulations, 29 CFR part 5, the appropriate information is being maintained under §5.5 (a)(3)(i) of Regulations, 29 CFR part 5, and that such information is correct and complete;

(ii) That each laborer or mechanic (including each helper, apprentice, and trainee) employed on the contract during the payroll period has been paid the full weekly wages earned, without rebate, either directly or indirectly, and that no deductions have been made either directly or indirectly from the full wages earned, other than permissible deductions as set forth in Regulations, 29 CFR part 3;

(iii) That each laborer or mechanic has been paid not less than the applicable wage rates and fringe benefits or cash equivalents for the classification of work performed, as specified in the applicable wage determination incorporated into the contract.

(3) The weekly submission of a properly executed certification set forth on the reverse side of Optional Form WH–347 shall satisfy the requirement for submission of the "Statement of Compliance" required by paragraph 3.b.(2) of this section.

(4) The falsification of any of the above certifications may subject the contractor or subcontractor to civil or criminal prosecution under section 1001 of title 18 and section 231 of title 31 of the United States Code.

c. The contractor or subcontractor shall make the records required under paragraph 3.a. of this section available for inspection, copying, or transcription by authorized representatives of the contracting agency, the State DOT, the FHWA, or the Department of Labor, and shall permit such representatives to interview employees during working hours on the job. If the contractor or subcontractor fails to submit the required records or to make them available, the FHWA may,

INFORMATIONAL COPY ONLY, NOT FOR BIDDING PURPOSES

after written notice to the contractor, the contracting agency or the State DOT, take such action as may be necessary to cause the suspension of any further payment, advance, or guarantee of funds. Furthermore, failure to submit the required records upon request or to make such records available may be grounds for debarment action pursuant to 29 CFR 5.12.

4. Apprentices and trainees

a. Apprentices (programs of the USDOL).

Apprentices will be permitted to work at less than the predetermined rate for the work they performed when they are employed pursuant to and individually registered in a bona fide apprenticeship program registered with the U.S. Department of Labor, Employment and Training Administration, Office of Apprenticeship Training, Employer and Labor Services, or with a State Apprenticeship Agency recognized by the Office, or if a person is employed in his or her first 90 days of probationary employment as an apprentice in such an apprenticeship program, who is not individually registered in the program, but who has been certified by the Office of Apprenticeship Training, Employer and Labor Services or a State Apprenticeship Agency (where appropriate) to be eligible for probationary employment as an apprentice.

The allowable ratio of apprentices to journeymen on the job site in any craft classification shall not be greater than the ratio permitted to the contractor as to the entire work force under the registered program. Any worker listed on a payroll at an apprentice wage rate, who is not registered or otherwise employed as stated above, shall be paid not less than the applicable wage rate on the wage determination for the classification of work actually performed. In addition, any apprentice performing work on the job site in excess of the ratio permitted under the registered program shall be paid not less than the applicable wage rate on the wage determination for the work actually performed. Where a contractor is performing construction on a project in a locality other than that in which its program is registered, the ratios and wage rates (expressed in percentages of the journeyman's hourly rate) specified in the contractor's or subcontractor's registered program shall be observed.

Every apprentice must be paid at not less than the rate specified in the registered program for the apprentice's level of progress, expressed as a percentage of the journeymen hourly rate specified in the applicable wage determination. Apprentices shall be paid fringe benefits in accordance with the provisions of the apprenticeship program. If the apprenticeship program does not specify fringe benefits, apprentices must be paid the full amount of fringe benefits listed on the wage determination for the applicable classification. If the Administrator determines that a different practice prevails for the applicable apprentice classification, fringes shall be paid in accordance with that determination.

In the event the Office of Apprenticeship Training, Employer and Labor Services, or a State Apprenticeship Agency recognized by the Office, withdraws approval of an apprenticeship program, the contractor will no longer be permitted to utilize apprentices at less than the applicable predetermined rate for the work performed until an acceptable program is approved.

b. Trainees (programs of the USDOL).

Except as provided in 29 CFR 5.16, trainees will not be permitted to work at less than the predetermined rate for the work performed unless they are employed pursuant to and

INFORMATIONAL COPY ONLY, NOT FOR BIDDING PURPOSES

individually registered in a program which has received prior approval, evidenced by formal certification by the U.S. Department of Labor, Employment and Training Administration.

The ratio of trainees to journeymen on the job site shall not be greater than permitted under the plan approved by the Employment and Training Administration.

Every trainee must be paid at not less than the rate specified in the approved program for the trainee's level of progress, expressed as a percentage of the journeyman hourly rate specified in the applicable wage determination. Trainees shall be paid fringe benefits in accordance with the provisions of the trainee program. If the trainee program does not mention fringe benefits, trainees shall be paid the full amount of fringe benefits listed on the wage determination unless the Administrator of the Wage and Hour Division determines that there is an apprenticeship program associated with the corresponding journeyman wage rate on the wage determination which provides for less than full fringe benefits for apprentices. Any employee listed on the payroll at a trainee rate who is not registered and participating in a training plan approved by the Employment and Training Administration shall be paid not less than the applicable wage rate on the wage determination for the classification of work actually performed. In addition, any trainee performing work on the job site in excess of the ratio permitted under the registered program shall be paid not less than the applicable wage rate on the wage determination for the work actually performed.

In the event the Employment and Training Administration withdraws approval of a training program, the contractor will no longer be permitted to utilize trainees at less than the applicable predetermined rate for the work performed until an acceptable program is approved.

c. Equal employment opportunity. The utilization of apprentices, trainees and journeymen under this part shall be in conformity with the equal employment opportunity requirements of Executive Order 11246, as amended, and 29 CFR part 30.

d. Apprentices and Trainees (programs of the U.S. DOT).

Apprentices and trainees working under apprenticeship and skill training programs which have been certified by the Secretary of Transportation as promoting EEO in connection with Federal-aid highway construction programs are not subject to the requirements of paragraph 4 of this Section IV. The straight time hourly wage rates for apprentices and trainees under such programs will be established by the particular programs. The ratio of apprentices and trainees to journeymen shall not be greater than permitted by the terms of the particular program.

5. Compliance with Copeland Act requirements. The contractor shall comply with the requirements of 29 CFR part 3, which are incorporated by reference in this contract.

6. Subcontracts. The contractor or subcontractor shall insert Form FHWA-1273 in any subcontracts and also require the subcontractors to include Form FHWA-1273 in any lower tier subcontracts. The prime contractor shall be responsible for the compliance by any subcontractor or lower tier subcontractor with all the contract clauses in 29 CFR 5.5.

7. Contract termination: debarment. A breach of the contract clauses in 29 CFR 5.5 may be grounds for termination of the contract, and for debarment as a contractor and a subcontractor as provided in 29 CFR 5.12.

INFORMATIONAL COPY ONLY NOT FOR BIDDING PURPOSES

8. Compliance with Davis-Bacon and Related Act requirements. All rulings and interpretations of the Davis-Bacon and Related Acts contained in 29 CFR parts 1, 3, and 5 are herein incorporated by reference in this contract.

9. Disputes concerning labor standards. Disputes arising out of the labor standards provisions of this contract shall not be subject to the general disputes clause of this contract. Such disputes shall be resolved in accordance with the procedures of the Department of Labor set forth in 29 CFR parts 5, 6, and 7. Disputes within the meaning of this clause include disputes between the contractor (or any of its subcontractors) and the contracting agency, the U.S. Department of Labor, or the employees or their representatives.

10. Certification of eligibility.

a. By entering into this contract, the contractor certifies that neither it (nor he or she) nor any person or firm who has an interest in the contractor's firm is a person or firm ineligible to be awarded Government contracts by virtue of section 3(a) of the Davis-Bacon Act or 29 CFR 5.12(a)(1).

b. No part of this contract shall be subcontracted to any person or firm ineligible for award of a Government contract by virtue of section 3(a) of the Davis-Bacon Act or 29 CFR 5.12(a)(1).

c. The penalty for making false statements is prescribed in the U.S. Criminal Code, 18 U.S.C. 1001.

V. CONTRACT WORK HOURS AND SAFETY STANDARDS ACT

The following clauses apply to any Federal-aid construction contract in an amount in excess of $100,000 and subject to the overtime provisions of the Contract Work Hours and Safety Standards Act. These clauses shall be inserted in addition to the clauses required by 29 CFR 5.5(a) or 29 CFR 4.6. As used in this paragraph, the terms laborers and mechanics include watchmen and guards.

1. Overtime requirements. No contractor or subcontractor contracting for any part of the contract work which may require or involve the employment of laborers or mechanics shall require or permit any such laborer or mechanic in any workweek in which he or she is employed on such work to work in excess of forty hours in such workweek unless such laborer or mechanic receives compensation at a rate not less than one and one-half times the basic rate of pay for all hours worked in excess of forty hours in such workweek.

2. Violation; liability for unpaid wages; liquidated damages. In the event of any violation of the clause set forth in paragraph (1.) of this section, the contractor and any subcontractor responsible therefor shall be liable for the unpaid wages. In addition, such contractor and subcontractor shall be liable to the United States (in the case of work done under contract for the District of Columbia or a territory, to such District or to such territory), for liquidated damages. Such liquidated damages shall be computed with respect to each individual laborer or mechanic, including watchmen and guards, employed in violation of the clause set forth in paragraph (1.) of this section, in the sum of $10 for each calendar day on which such individual

INFORMATIONAL COPY ONLY NOT FOR BIDDING PURPOSES

was required or permitted to work in excess of the standard workweek of forty hours without payment of the overtime wages required by the clause set forth in paragraph (1.) of this section.

3. Withholding for unpaid wages and liquidated damages. The FHWA or the contacting agency shall upon its own action or upon written request of an authorized representative of the Department of Labor withhold or cause to be withheld, from any moneys payable on account of work performed by the contractor or subcontractor under any such contract or any other Federal contract with the same prime contractor, or any other federally-assisted contract subject to the Contract Work Hours and Safety Standards Act, which is held by the same prime contractor, such sums as may be determined to be necessary to satisfy any liabilities of such contractor or subcontractor for unpaid wages and liquidated damages as provided in the clause set forth in paragraph (2.) of this section.

4. Subcontracts. The contractor or subcontractor shall insert in any subcontracts the clauses set forth in paragraph (1.) through (4.) of this section and also a clause requiring the subcontractors to include these clauses in any lower tier subcontracts. The prime contractor shall be responsible for compliance by any subcontractor or lower tier subcontractor with the clauses set forth in paragraphs (1.) through (4.) of this section.

VI. SUBLETTING OR ASSIGNING THE CONTRACT

This provision is applicable to all Federal-aid construction contracts on the National Highway System.

1. The contractor shall perform with its own organization contract work amounting to not less than 30 percent (or a greater percentage if specified elsewhere in the contract) of the total original contract price, excluding any specialty items designated by the contracting agency. Specialty items may be performed by subcontract and the amount of any such specialty items performed may be deducted from the total original contract price before computing the amount of work required to be performed by the contractor's own organization (23 CFR 635.116).

a. The term "perform work with its own organization" refers to workers employed or leased by the prime contractor, and equipment owned or rented by the prime contractor, with or without operators. Such term does not include employees or equipment of a subcontractor or lower tier subcontractor, agents of the prime contractor, or any other assignees. The term may include payments for the costs of hiring leased employees from an employee leasing firm meeting all relevant Federal and State regulatory requirements. Leased employees may only be included in this term if the prime contractor meets all of the following conditions:

(1) the prime contractor maintains control over the supervision of the day-to-day activities of the leased employees;

(2) the prime contractor remains responsible for the quality of the work of the leased employees;

(3) the prime contractor retains all power to accept or exclude individual employees from work on the project; and

INFORMATIONAL COPY ONLY, NOT FOR BIDDING PURPOSES

(4) the prime contractor remains ultimately responsible for the payment of predetermined minimum wages, the submission of payrolls, statements of compliance and all other Federal regulatory requirements.

b. "Specialty Items" shall be construed to be limited to work that requires highly specialized knowledge, abilities, or equipment not ordinarily available in the type of contracting organizations qualified and expected to bid or propose on the contract as a whole and in general are to be limited to minor components of the overall contract.

2. The contract amount upon which the requirements set forth in paragraph (1) of Section VI is computed includes the cost of material and manufactured products which are to be purchased or produced by the contractor under the contract provisions.

3. The contractor shall furnish (a) a competent superintendent or supervisor who is employed by the firm, has full authority to direct performance of the work in accordance with the contract requirements, and is in charge of all construction operations (regardless of who performs the work) and (b) such other of its own organizational resources (supervision, management, and engineering services) as the contracting officer determines is necessary to assure the performance of the contract.

4. No portion of the contract shall be sublet, assigned or otherwise disposed of except with the written consent of the contracting officer, or authorized representative, and such consent when given shall not be construed to relieve the contractor of any responsibility for the fulfillment of the contract. Written consent will be given only after the contracting agency has assured that each subcontract is evidenced in writing and that it contains all pertinent provisions and requirements of the prime contract.

5. The 30% self-performance requirement of paragraph (1) is not applicable to design-build contracts; however, contracting agencies may establish their own self-performance requirements.

VII. SAFETY: ACCIDENT PREVENTION

This provision is applicable to all Federal-aid construction contracts and to all related subcontracts.

1. In the performance of this contract the contractor shall comply with all applicable Federal, State, and local laws governing safety, health, and sanitation (23 CFR 635). The contractor shall provide all safeguards, safety devices and protective equipment and take any other needed actions as it determines, or as the contracting officer may determine, to be reasonably necessary to protect the life and health of employees on the job and the safety of the public and to protect property in connection with the performance of the work covered by the contract.

2. It is a condition of this contract, and shall be made a condition of each subcontract, which the contractor enters into pursuant to this contract, that the contractor and any subcontractor shall not permit any employee, in performance of the contract, to work in surroundings or under conditions which are unsanitary, hazardous or dangerous to his/her health or safety, as determined under construction safety and health standards (29 CFR 1926) promulgated by the Secretary of Labor, in accordance with Section 107 of the Contract Work Hours and Safety Standards Act (40 U.S.C. 3704).

INFORMATIONAL COPY ONLY, NOT FOR BIDDING PURPOSES

3. Pursuant to 29 CFR 1926.3, it is a condition of this contract that the Secretary of Labor or authorized representative thereof, shall have right of entry to any site of contract performance to inspect or investigate the matter of compliance with the construction safety and health standards and to carry out the duties of the Secretary under Section 107 of the Contract Work Hours and Safety Standards Act (40 U.S.C.3704).

VIII. FALSE STATEMENTS CONCERNING HIGHWAY PROJECTS

This provision is applicable to all Federal-aid construction contracts and to all related subcontracts.

In order to assure high quality and durable construction in conformity with approved plans and specifications and a high degree of reliability on statements and representations made by engineers, contractors, suppliers, and workers on Federal-aid highway projects, it is essential that all persons concerned with the project perform their functions as carefully, thoroughly, and honestly as possible. Willful falsification, distortion, or misrepresentation with respect to any facts related to the project is a violation of Federal law. To prevent any misunderstanding regarding the seriousness of these and similar acts, Form FHWA-1022 shall be posted on each Federal-aid highway project (23 CFR 635) in one or more places where it is readily available to all persons concerned with the project:

18 U.S.C. 1020 reads as follows:

"Whoever, being an officer, agent, or employee of the United States, or of any State or Territory, or whoever, whether a person, association, firm, or corporation, knowingly makes any false statement, false representation, or false report as to the character, quality, quantity, or cost of the material used or to be used, or the quantity or quality of the work performed or to be performed, or the cost thereof in connection with the submission of plans, maps, specifications, contracts, or costs of construction on any highway or related project submitted for approval to the Secretary of Transportation; or

Whoever knowingly makes any false statement, false representation, false report or false claim with respect to the character, quality, quantity, or cost of any work performed or to be performed, or materials furnished or to be furnished, in connection with the construction of any highway or related project approved by the Secretary of Transportation; or

Whoever knowingly makes any false statement or false representation as to material fact in any statement, certificate, or report submitted pursuant to provisions of the Federal-aid Roads Act approved July 1, 1916, (39 Stat. 355), as amended and supplemented;

Shall be fined under this title or imprisoned not more than 5 years or both."

IX. IMPLEMENTATION OF CLEAN AIR ACT AND FEDERAL WATER POLLUTION CONTROL ACT

This provision is applicable to all Federal-aid construction contracts and to all related subcontracts.

INFORMATIONAL COPY ONLY, NOT FOR BIDDING PURPOSES

By submission of this bid/proposal or the execution of this contract, or subcontract, as appropriate, the bidder, proposer, Federal-aid construction contractor, or subcontractor, as appropriate, will be deemed to have stipulated as follows:

1. That any person who is or will be utilized in the performance of this contract is not prohibited from receiving an award due to a violation of Section 508 of the Clean Water Act or Section 306 of the Clean Air Act.
2. That the contractor agrees to include or cause to be included the requirements of paragraph (1) of this Section X in every subcontract, and further agrees to take such action as the contracting agency may direct as a means of enforcing such requirements.

X. CERTIFICATION REGARDING DEBARMENT, SUSPENSION, INELIGIBILITY AND VOLUNTARY EXCLUSION

This provision is applicable to all Federal-aid construction contracts, design-build contracts, subcontracts, lower-tier subcontracts, purchase orders, lease agreements, consultant contracts or any other covered transaction requiring FHWA approval or that is estimated to cost $25,000 or more – as defined in 2 CFR Parts 180 and 1200.

1. Instructions for Certification – First Tier Participants:

a. By signing and submitting this proposal, the prospective first tier participant is providing the certification set out below.

b. The inability of a person to provide the certification set out below will not necessarily result in denial of participation in this covered transaction. The prospective first tier participant shall submit an explanation of why it cannot provide the certification set out below. The certification or explanation will be considered in connection with the department or agency's determination whether to enter into this transaction. However, failure of the prospective first tier participant to furnish a certification or an explanation shall disqualify such a person from participation in this transaction.

c. The certification in this clause is a material representation of fact upon which reliance was placed when the contracting agency determined to enter into this transaction. If it is later determined that the prospective participant knowingly rendered an erroneous certification, in addition to other remedies available to the Federal Government, the contracting agency may terminate this transaction for cause of default.

d. The prospective first tier participant shall provide immediate written notice to the contracting agency to whom this proposal is submitted if any time the prospective first tier participant learns that its certification was erroneous when submitted or has become erroneous by reason of changed circumstances.

e. The terms "covered transaction," "debarred," "suspended," "ineligible," "participant," "person," "principal," and "voluntarily excluded," as used in this clause, are defined in 2 CFR Parts 180 and 1200. "First Tier Covered Transactions" refers to any covered transaction between a grantee or subgrantee of Federal funds and a participant (such as the prime or

INFORMATIONAL COPY ONLY, NOT FOR BIDDING PURPOSES

general contract). "Lower Tier Covered Transactions" refers to any covered transaction under a First Tier Covered Transaction (such as subcontracts). "First Tier Participant" refers to the participant who has entered into a covered transaction with a grantee or subgrantee of Federal funds (such as the prime or general contractor). "Lower Tier Participant" refers any participant who has entered into a covered transaction with a First Tier Participant or other Lower Tier Participants (such as subcontractors and suppliers).

f. The prospective first tier participant agrees by submitting this proposal that, should the proposed covered transaction be entered into, it shall not knowingly enter into any lower tier covered transaction with a person who is debarred, suspended, declared ineligible, or voluntarily excluded from participation in this covered transaction, unless authorized by the department or agency entering into this transaction.

g. The prospective first tier participant further agrees by submitting this proposal that it will include the clause titled "Certification Regarding Debarment, Suspension, Ineligibility and Voluntary Exclusion-Lower Tier Covered Transactions," provided by the department or contracting agency, entering into this covered transaction, without modification, in all lower tier covered transactions and in all solicitations for lower tier covered transactions exceeding the $25,000 threshold.

h. A participant in a covered transaction may rely upon a certification of a prospective participant in a lower tier covered transaction that is not debarred, suspended, ineligible, or voluntarily excluded from the covered transaction, unless it knows that the certification is erroneous. A participant is responsible for ensuring that its principals are not suspended, debarred, or otherwise ineligible to participate in covered transactions. To verify the eligibility of its principals, as well as the eligibility of any lower tier prospective participants, each participant may, but is not required to, check the Excluded Parties List System website (https://www.epls.gov/), which is compiled by the General Services Administration.

i. Nothing contained in the foregoing shall be construed to require the establishment of a system of records in order to render in good faith the certification required by this clause. The knowledge and information of the prospective participant is not required to exceed that which is normally possessed by a prudent person in the ordinary course of business dealings.

j. Except for transactions authorized under paragraph (f) of these instructions, if a participant in a covered transaction knowingly enters into a lower tier covered transaction with a person who is suspended, debarred, ineligible, or voluntarily excluded from participation in this transaction, in addition to other remedies available to the Federal Government, the department or agency may terminate this transaction for cause or default.

* * * * *

2. Certification Regarding Debarment, Suspension, Ineligibility and Voluntary Exclusion – First Tier Participants:

a. The prospective first tier participant certifies to the best of its knowledge and belief, that it and its principals:

(1) Are not presently debarred, suspended, proposed for debarment, declared ineligible, or voluntarily excluded from participating in covered transactions by any Federal department or agency;

INFORMATIONAL COPY ONLY, NOT FOR BIDDING PURPOSES

(2) Have not within a three-year period preceding this proposal been convicted of or had a civil judgment rendered against them for commission of fraud or a criminal offense in connection with obtaining, attempting to obtain, or performing a public (Federal, State or local) transaction or contract under a public transaction; violation of Federal or State antitrust statutes or commission of embezzlement, theft, forgery, bribery, falsification or destruction of records, making false statements, or receiving stolen property;

(3) Are not presently indicted for or otherwise criminally or civilly charged by a governmental entity (Federal, State or local) with commission of any of the offenses enumerated in paragraph (a)(2) of this certification; and

(4) Have not within a three-year period preceding this application/proposal had one or more public transactions (Federal, State or local) terminated for cause or default.

b. Where the prospective participant is unable to certify to any of the statements in this certification, such prospective participant shall attach an explanation to this proposal.

2. **Instructions for Certification - Lower Tier Participants:**

(Applicable to all subcontracts, purchase orders and other lower tier transactions requiring prior FHWA approval or estimated to cost $25,000 or more - 2 CFR Parts 180 and 1200)

a. By signing and submitting this proposal, the prospective lower tier is providing the certification set out below.

b. The certification in this clause is a material representation of fact upon which reliance was placed when this transaction was entered into. If it is later determined that the prospective lower tier participant knowingly rendered an erroneous certification, in addition to other remedies available to the Federal Government, the department, or agency with which this transaction originated may pursue available remedies, including suspension and/or debarment.

c. The prospective lower tier participant shall provide immediate written notice to the person to which this proposal is submitted if at any time the prospective lower tier participant learns that its certification was erroneous by reason of changed circumstances.

d. The terms "covered transaction," "debarred," "suspended," "ineligible," "participant," "person," "principal," and "voluntarily excluded," as used in this clause, are defined in 2 CFR Parts 180 and 1200. You may contact the person to which this proposal is submitted for assistance in obtaining a copy of those regulations. "First Tier Covered Transactions" refers to any covered transaction between a grantee or subgrantee of Federal funds and a participant (such as the prime or general contract). "Lower Tier Covered Transactions" refers to any covered transaction under a First Tier Covered Transaction (such as subcontracts). "First Tier Participant" refers to the participant who has entered into a covered transaction with a grantee or subgrantee of Federal funds (such as the prime or general contractor). "Lower Tier Participant" refers any participant who has entered into a covered transaction with a First Tier Participant or other Lower Tier Participants (such as subcontractors and suppliers).

e. The prospective lower tier participant agrees by submitting this proposal that, should the proposed covered transaction be entered into, it shall not knowingly enter into any lower tier covered transaction with a person who is debarred, suspended, declared ineligible, or

INFORMATIONAL COPY ONLY, NOT FOR BIDDING PURPOSES

voluntarily excluded from participation in this covered transaction, unless authorized by the department or agency with which this transaction originated.

f. The prospective lower tier participant further agrees by submitting this proposal that it will include this clause titled "Certification Regarding Debarment, Suspension, Ineligibility and Voluntary Exclusion-Lower Tier Covered Transaction," without modification, in all lower tier covered transactions and in all solicitations for lower tier covered transactions exceeding the $25,000 threshold.

g. A participant in a covered transaction may rely upon a certification of a prospective participant in a lower tier covered transaction that is not debarred, suspended, ineligible, or voluntarily excluded from the covered transaction, unless it knows that the certification is erroneous. A participant is responsible for ensuring that its principals are not suspended, debarred, or otherwise ineligible to participate in covered transactions. To verify the eligibility of its principals, as well as the eligibility of any lower tier prospective participants, each participant may, but is not required to, check the Excluded Parties List System website (https://www.epls.gov/), which is compiled by the General Services Administration.

h. Nothing contained in the foregoing shall be construed to require establishment of a system of records in order to render in good faith the certification required by this clause. The knowledge and information of participant is not required to exceed that which is normally possessed by a prudent person in the ordinary course of business dealings.

i. Except for transactions authorized under paragraph e of these instructions, if a participant in a covered transaction knowingly enters into a lower tier covered transaction with a person who is suspended, debarred, ineligible, or voluntarily excluded from participation in this transaction, in addition to other remedies available to the Federal Government, the department or agency with which this transaction originated may pursue available remedies, including suspension and/or debarment.

* * * * *

Certification Regarding Debarment, Suspension, Ineligibility and Voluntary Exclusion--Lower Tier Participants:

1. The prospective lower tier participant certifies, by submission of this proposal, that neither it nor its principals is presently debarred, suspended, proposed for debarment, declared ineligible, or voluntarily excluded from participating in covered transactions by any Federal department or agency.

2. Where the prospective lower tier participant is unable to certify to any of the statements in this certification, such prospective participant shall attach an explanation to this proposal.

* * * * *

INFORMATIONAL COPY ONLY, NOT FOR BIDDING PURPOSES

XI. CERTIFICATION REGARDING USE OF CONTRACT FUNDS FOR LOBBYING

This provision is applicable to all Federal-aid construction contracts and to all related subcontracts which exceed $100,000 (49 CFR 20).

1. The prospective participant certifies, by signing and submitting this bid or proposal, to the best of his or her knowledge and belief, that:

a. No Federal appropriated funds have been paid or will be paid, by or on behalf of the undersigned, to any person for influencing or attempting to influence an officer or employee of any Federal agency, a Member of Congress, an officer or employee of Congress, or an employee of a Member of Congress in connection with the awarding of any Federal contract, the making of any Federal grant, the making of any Federal loan, the entering into of any cooperative agreement, and the extension, continuation, renewal, amendment, or modification of any Federal contract, grant, loan, or cooperative agreement.

b. If any funds other than Federal appropriated funds have been paid or will be paid to any person for influencing or attempting to influence an officer or employee of any Federal agency, a Member of Congress, an officer or employee of Congress, or an employee of a Member of Congress in connection with this Federal contract, grant, loan, or cooperative agreement, the undersigned shall complete and submit Standard Form-LLL, "Disclosure Form to Report Lobbying," in accordance with its instructions.

2. This certification is a material representation of fact upon which reliance was placed when this transaction was made or entered into. Submission of this certification is a prerequisite for making or entering into this transaction imposed by 31 U.S.C. 1352. Any person who fails to file the required certification shall be subject to a civil penalty of not less than $10,000 and not more than $100,000 for each such failure.

3. The prospective participant also agrees by submitting its bid or proposal that the participant shall require that the language of this certification be included in all lower tier subcontracts, which exceed $100,000 and that all such recipients shall certify and disclose accordingly.

INFORMATIONAL COPY ONLY, NOT FOR BIDDING PURPOSES

ATTACHMENT A - EMPLOYMENT AND MATERIALS PREFERENCE FOR APPALACHIAN DEVELOPMENT HIGHWAY SYSTEM OR APPALACHIAN LOCAL ACCESS ROAD CONTRACTS

This provision is applicable to all Federal-aid projects funded under the Appalachian Regional Development Act of 1965.

1. During the performance of this contract, the contractor undertaking to do work which is, or reasonably may be, done as on-site work, shall give preference to qualified persons who regularly reside in the labor area as designated by the DOL wherein the contract work is situated, or the subregion, or the Appalachian counties of the State wherein the contract work is situated, except:

a. To the extent that qualified persons regularly residing in the area are not available.

b. For the reasonable needs of the contractor to employ supervisory or specially experienced personnel necessary to assure an efficient execution of the contract work.

c. For the obligation of the contractor to offer employment to present or former employees as the result of a lawful collective bargaining contract, provided that the number of nonresident persons employed under this subparagraph (1c) shall not exceed 20 percent of the total number of employees employed by the contractor on the contract work, except as provided in subparagraph (4) below.

2. The contractor shall place a job order with the State Employment Service indicating (a) the classifications of the laborers, mechanics and other employees required to perform the contract work, (b) the number of employees required in each classification, (c) the date on which the participant estimates such employees will be required, and (d) any other pertinent information required by the State Employment Service to complete the job order form. The job order may be placed with the State Employment Service in writing or by telephone. If during the course of the contract work, the information submitted by the contractor in the original job order is substantially modified, the participant shall promptly notify the State Employment Service.

3. The contractor shall give full consideration to all qualified job applicants referred to him by the State Employment Service. The contractor is not required to grant employment to any job applicants who, in his opinion, are not qualified to perform the classification of work required.

4. If, within one week following the placing of a job order by the contractor with the State Employment Service, the State Employment Service is unable to refer any qualified job applicants to the contractor, or less than the number requested, the State Employment Service will forward a certificate to the contractor indicating the unavailability of applicants. Such certificate shall be made a part of the contractor's permanent project records. Upon receipt of this certificate, the contractor may employ persons who do not normally reside in the labor area to fill positions covered by the certificate, notwithstanding the provisions of subparagraph (1c) above.

5.The provisions of 23 CFR 633.207(e) allow the contracting agency to provide a contractual preference for the use of mineral resource materials native to the Appalachian region.

6. The contractor shall include the provisions of Sections 1 through 4 of this Attachment A in every subcontract for work which is, or reasonably may be, done as on-site work.

INFORMATIONAL COPY ONLY, NOT FOR BIDDING PURPOSES

General Decision Number: WA150001 02/27/2015 WA1

Superseded General Decision Number: WA20140001

State: Washington

Construction Type: Highway

Counties: Washington Statewide.

HIGHWAY (Excludes D.O.E. Hanford Site in Benton and Franklin Counties)

Note: Executive Order (EO) 13658 establishes an hourly minimum wage of $10.10 for 2015 that applies to all contracts subject to the Davis-Bacon Act for which the solicitation is issued on or after January 1, 2015. If this contract is covered by the EO, the contractor must pay all workers in any classification listed on this wage determination at least $10.10 (or the applicable wage rate listed on this wage determination, if it is higher) for all hours spent performing on the contract. The EO minimum wage rate will be adjusted annually. Additional information on contractor requirements and worker protections under the EO is available at www.dol.gov/whd/govcontracts.

Modification Number	Publication Date
0	01/02/2015
1	01/09/2015
2	01/23/2015
3	02/27/2015

CARP0001-008 06/01/2013

	Rates	Fringes
CARPENTER		
COLUMBIA RIVER AREA - ADAMS, BENTON, COLUMBIA, DOUGLAS (EAST OF THE 120TH MERIDIAN), FERRY, FRANKLIN, GRANT, OKANOGAN (EAST OF THE 120TH MERIDIAN) AND WALLA WALLA COUNTIES		
GROUP 1:	$ 30.66	12.87
GROUP 2:	$ 31.56	12.87
GROUP 3:	$ 31.64	12.87
GROUP 4:	$ 31.64	12.87
GROUP 5:	$ 62.58	12.87
GROUP 6	$ 30.29	12.87
GROUP 7	$ 31.29	12.87
GROUP 8	$ 28.54	12.87
GROUP 9	$ 30.29	12.87

INFORMATIONAL COPY ONLY, NOT FOR BIDDING PURPOSES

SPOKANE AREA: ASOTIN, GARFIELD, LINCOLN, PEND OREILLE, SPOKANE, STEVENS AND WHITMAN COUNTIES

GROUP 1:	$ 30.66	12.87
GROUP 2:	$ 31.56	12.87
GROUP 3:	$ 31.64	12.87
GROUP 4:	$ 31.64	12.87
GROUP 5:	$ 70.78	12.87
GROUP 6:	$ 32.64	12.87
GROUP 7	$ 35.39	12.87
GROUP 8	$ 34.39	12.87
GROUP 9	$ 34.39	12.87

CARPENTER & DIVER CLASSIFICATIONS:

GROUP 1: Carpenter
GROUP 2: Millwright, machine erector
GROUP 3: Piledriver - includes driving, pulling, cutting, placing collars, setting, welding, or creosote treated material, on all piling
GROUP 4: Bridge carpenters
GROUP 5: Diver Wet
GROUP 6: Diver Tender, Manifold Operator, ROV Operator
GROUP 7: Diver Standby, Bell/Vehicle or Submersible operator Not Under Pressure
GROUP 8: Assistant Tender, ROV Tender/Technician
GROUP 9: Manifold Operator-Mixed Gas

ZONE PAY:

ZONE 1	0-40 MILES	FREE
ZONE 2	41-65 MILES	$2.25/PER HOUR
ZONE 3	66-100 MILES	$3.25/PER HOUR
ZONE 4	OVER 100 MILES	$4.75/PER HOUR

DISPATCH POINTS:

CARPENTERS/MILLWRIGHTS: PASCO (515 N Neel Street) or Main Post Office of established residence of employee (Whichever is closest to the worksite).

CARPENTERS/PILEDRIVER: SPOKANE (127 E. AUGUSTA AVE.) or Main Post Office of established residence of employee (Whichever is closest to the worksite).

CARPENTERS: WENATCHEE (27 N. CHELAN) or Main Post Office of established residence of employee (Whichever is closest to the worksite).

CARPENTERS: COEUR D' ALENE (1839 N. GOVERNMENT WAY) or Main Post Office of established residence of employee (Whichever is closest to the worksite).

CARPENTERS: MOSCOW (302 N. JACKSON) or Main Post Office of established residence of employee (Whichever is closest to the worksite).

INFORMATIONAL COPY ONLY NOT FOR BIDDING PURPOSES

DEPTH PAY FOR DIVERS BELOW WATER SURFACE:
50-100 feet $2.00 per foot
101-150 feet $3.00 per foot
151-220 feet $4.00 per foot
221 feet and deeper $5.00 per foot

PREMIUM PAY FOR DIVING IN ENCLOSURES WITH NO VERTICAL ASCENT:
0-25 feet Free
26-300 feet $1.00 per Foot

SATURATION DIVING:
The standby rate applies until saturation starts. The saturation diving rate applies when divers are under pressure continuously until work task and decompression are complete. the diver rate shall be paid for all saturation hours.

WORK IN COMBINATION OF CLASSIFICATIONS:
Employees working in any combination of classifications within the diving crew (except dive supervisor) in a shift are paid in the classification with the highest rate for that shift.

HAZMAT PROJECTS:

Anyone working on a HAZMAT job (task), where HAZMAT certification is required, shall be compensated at a premium, in addition to the classification working in as follows:

LEVEL D + $.25 per hour - This is the lowest level of protection. No respirator is used and skin protection is minimal.

LEVEL C + $.50 per hour - This level uses an air purifying respirator or additional protective clothing.

LEVEL B + $.75 per hour - Uses same respirator protection as Level A. Supplied air line is provided in conjunction with a chemical "splash suit".

LEVEL A +$1.00 per hour - This level utilizes a fully encapsulated suit with a self-contained breathing apparatus or a supplied air line.

INFORMATIONAL COPY ONLY, NOT FOR BIDDING PURPOSES

CARP0003-006 10/01/2011

SOUTHWEST WASHINGTON: CLARK, COWLITZ, KLICKITAT, LEWIS(Piledriver only), PACIFIC (South of a straight line made by extending the north boundary line of Wahkiakum County west to Willapa Bay to the Pacific Ocean), SKAMANIA AND WAHKIAKUM COUNTIES and INCLUDES THE ENTIRE PENINSULA WEST OF WILLAPA BAY

SEE ZONE DESCRIPTION FOR CITIES BASE POINTS

ZONE 1:

	Rates	Fringes
Carpenters:		
CARPENTERS	$ 32.04	14.18
DIVERS TENDERS	$ 36.34	14.18
DIVERS	$ 77.08	14.18
DRYWALL	$ 27.56	14.18
MILLWRIGHTS	$ 32.19	14.18
PILEDRIVERS	$ 33.04	14.18

DEPTH PAY:
50 TO 100 FEET $1.00 PER FOOT OVER 50 FEET
101 TO 150 FEET $1.50 PER FOOT OVER 101 FEET
151 TO 200 FEET $2.00 PER FOOT OVER 151 FEET

Zone Differential (Add up Zone 1 rates):
Zone 2 - $0.85
Zone 3 - 1.25
Zone 4 - 1.70
Zone 5 - 2.00
Zone 6 - 3.00

BASEPOINTS: ASTORIA, LONGVIEW, PORTLAND, THE DALLES, AND VANCOUVER, (NOTE: All dispatches for Washington State Counties: Cowlitz, Wahkiakum and Pacific shall be from Longview Local #1707 and mileage shall be computed from that point.)

ZONE 1: Projects located within 30 miles of the respective city hall of the above mentioned cities
ZONE 2: Projects located more than 30 miles and less than 40 miles of the respective city of the above mentioned cities
ZONE 3: Projects located more than 40 miles and less than 50 miles of the respective city of the above mentioned cities
ZONE 4: Projects located more than 50 miles and less than 60 miles of the respective city of the above mentioned cities.
ZONE 5: Projects located more than 60 miles and less than 70 miles of the respective city of the above mentioned cities
ZONE 6: Projects located more than 70 miles of the respected city of the above mentioned cities

---

INFORMATIONAL COPY ONLY, NOT FOR BIDDING PURPOSES

CARP0770-003 07/01/2014

	Rates	Fringes
CARPENTER		
CENTRAL WASHINGTON: CHELAN, DOUGLAS (WEST OF THE 120TH MERIDIAN), KITTITAS, OKANOGAN (WEST OF THE 120TH MERIDIAN) AND YAKIMA COUNTIES		
CARPENTERS ON CREOSOTE MATERIAL	$ 38.78	13.64
CARPENTERS	$ 38.68	13.64
DIVERS TENDER	$ 39.15	13.64
DIVERS	$ 87.20	13.64
MILLWRIGHT AND MACHINE ERECTORS	$ 39.78	13.64
PILEDRIVER, DRIVING, PULLING, CUTTING, PLACING COLLARS, SETTING, WELDING OR CRESOTE TREATED MATERIAL, ALL PILING	$ 38.93	13.64

(HOURLY ZONE PAY: WESTERN AND CENTRAL WASHINGTON - ALL CLASSIFICATIONS EXCEPT MILLWRIGHTS AND PILEDRIVERS

Hourly Zone Pay shall be paid on jobs located outside of the free zone computed from the city center of the following listed cities:

Seattle	Olympia	Bellingham
Auburn	Bremerton	Anacortes
Renton	Shelton	Yakima
Aberdeen-Hoquiam	Tacoma	Wenatchee
Ellensburg	Everett	Port Angeles
Centralia	Mount Vernon	Sunnyside
Chelan	Pt. Townsend	

Zone Pay:

0 -25 radius miles	Free
26-35 radius miles	$1.00/hour
36-45 radius miles	$1.15/hour
46-55 radius miles	$1.35/hour
Over 55 radius miles	$1.55/hour

(HOURLY ZONE PAY: WESTERN AND CENTRAL WASHINGTON - MILLWRIGHT AND PILEDRIVER ONLY)

Hourly Zone Pay shall be computed from Seattle Union Hall, Tacoma City center, and Everett City center

Zone Pay:

0 -25 radius miles	Free
26-45 radius miles	$ .70/hour
Over 45 radius miles	$1.50/hour

INFORMATIONAL COPY ONLY, NOT FOR BIDDING PURPOSES

CARP0770-006 06/01/2014

	Rates	Fringes
CARPENTER		
WESTERN WASHINGTON: CLALLAM, GRAYS HARBOR, ISLAND, JEFFERSON, KING, KITSAP, LEWIS (excludes piledrivers only), MASON, PACIFIC (North of a straight line made by extending the north boundary line of Wahkiakum County west to the Pacific Ocean), PIERCE, SAN JUAN, SKAGIT, SNOHOMISH, THURSTON AND WHATCOM COUNTIES		
BRIDGE CARPENTERS	$ 38.68	13.64
CARPENTERS ON CREOSOTE MATERIAL	$ 38.78	13.64
CARPENTERS	$ 38.68	13.64
DIVERS TENDER	$ 39.15	13.64
DIVERS	$ 87.20	13.64
MILLWRIGHT AND MACHINE ERECTORS	$ 39.78	13.64
PILEDRIVER, DRIVING, PULLING, CUTTING, PLACING COLLARS, SETTING, WELDING OR CRESOTE TREATED MATERIAL, ALL PILING	$ 38.93	13.64

(HOURLY ZONE PAY: WESTERN AND CENTRAL WASHINGTON - ALL CLASSIFICATIONS EXCEPT MILLWRIGHTS AND PILEDRIVERS

Hourly Zone Pay shall be paid on jobs located outside of the free zone computed from the city center of the following listed cities:

Seattle	Olympia	Bellingham
Auburn	Bremerton	Anacortes
Renton	Shelton	Yakima
Aberdeen-Hoquiam	Tacoma	Wenatchee
Ellensburg	Everett	Port Angeles
Centralia	Mount Vernon	Sunnyside
Chelan	Pt. Townsend	

Zone Pay:	
0 -25 radius miles	Free
26-35 radius miles	$1.00/hour
36-45 radius miles	$1.15/hour
46-55 radius miles	$1.35/hour
Over 55 radius miles	$1.55/hour

(HOURLY ZONE PAY: WESTERN AND CENTRAL WASHINGTON - MILLWRIGHT AND PILEDRIVER ONLY)

Hourly Zone Pay shall be computed from Seattle Union Hall, Tacoma City center, and Everett City center

Zone Pay:	
0 -25 radius miles	Free
26-45 radius miles	$ .70/hour
Over 45 radius miles	$1.50/hour

INFORMATIONAL COPY ONLY - NOT FOR BIDDING PURPOSES

ELEC0046-001 02/04/2013

CALLAM, JEFFERSON, KING AND KITSAP COUNTIES

	Rates	Fringes
CABLE SPLICER	$ 46.87	3%+15.96
ELECTRICIAN	$ 42.61	3%+15.96

ELEC0048-003 01/01/2015

CLARK, KLICKITAT AND SKAMANIA COUNTIES

	Rates	Fringes
CABLE SPLICER	$ 44.22	21.50
ELECTRICIAN	$ 40.20	21.50

HOURLY ZONE PAY:

Hourly Zone Pay shall be paid on jobs located outside of the free zone computed from the city center of the following listed cities:

Portland, The Dalles, Hood River, Tillamook, Seaside and Astoria

Zone Pay:
Zone 1: 31-50 miles $1.50/hour
Zone 2: 51-70 miles $3.50/hour
Zone 3: 71-90 miles $5.50/hour
Zone 4: Beyond 90 miles $9.00/hour

*These are not miles driven. Zones are based on Delorrne Street Atlas USA 2006 plus.

ELEC0048-029 01/01/2015

COWLITZ AND WAHKIAKUM COUNTY

	Rates	Fringes
CABLE SPLICER	$ 44.22	21.50
ELECTRICIAN	$ 40.20	21.50

ELEC0073-001 08/02/2014

ADAMS, FERRY, LINCOLN, PEND OREILLE, SPOKANE, STEVENS, WHITMAN COUNTIES

	Rates	Fringes
CABLE SPLICER	$ 33.00	16.25
ELECTRICIAN	$ 30.00	16.25

INFORMATIONAL COPY ONLY, NOT FOR BIDDING PURPOSES

ELEC0076-002 09/01/2014

GRAYS HARBOR, LEWIS, MASON, PACIFIC, PIERCE, AND THURSTON COUNTIES

	Rates	Fringes
CABLE SPLICER	$ 37.94	23.36
ELECTRICIAN	$ 34.49	23.36

ELEC0112-005 06/01/2014

ASOTIN, BENTON, COLUMBIA, FRANKLIN, GARFIELD, KITTITAS, WALLA WALLA, YAKIMA COUNTIES

	Rates	Fringes
CABLE SPLICER	$ 39.95	17.88
ELECTRICIAN	$ 38.05	17.82

ELEC0191-003 06/01/2014

ISLAND, SAN JUAN, SNOHOMISH, SKAGIT AND WHATCOM COUNTIES

	Rates	Fringes
CABLE SPLICER	$ 44.23	17.73
ELECTRICIAN	$ 40.21	17.73

ELEC0191-004 06/01/2014

CHELAN, DOUGLAS, GRANT AND OKANOGAN COUNTIES

	Rates	Fringes
CABLE SPLICER	$ 40.82	17.63
ELECTRICIAN	$ 37.11	17.63

INFORMATIONAL COPY ONLY, NOT FOR BIDDING PURPOSES

ENGI0302-003 06/01/2014

CHELAN (WEST OF THE 120TH MERIDIAN), CLALLAM, DOUGLAS (WEST OF THE 120TH MERIDIAN), GRAYS HARBOR, ISLAND, JEFFERSON, KING, KITSAP, KITTITAS, MASON, OKANOGAN (WEST OF THE 120TH MERIDIAN), SAN JUNA, SKAGIT, SNOHOMISH, WHATCOM AND YAKIMA (WEST OF THE 120TH MERIDIAN) COUNTIES

PROJECTS: CATEGORY A PROJECTS (EXCLUDES CATEGORY B PROJECTS, AS SHOWN BELOW)

Zone 1 (0-25 radius miles):

	Rates	Fringes
Power equipment operators:		
Group 1A	$ 38.39	17.39
Group 1AA	$ 38.96	17.39
Group 1AAA	$ 39.52	17.39
Group 1	$ 37.84	17.39
Group 2	$ 37.35	17.39
Group 3	$ 36.93	17.39
Group 4	$ 34.57	17.39

Zone Differential (Add to Zone 1 rates):
Zone 2 (26-45 radius miles) - $1.00
Zone 3 (Over 45 radius miles) - $1.30

BASEPOINTS: Aberdeen, Bellingham, Bremerton, Everett, Kent, Mount Vernon, Port Angeles, Port Townsend, Seattle, Shelton, Wenatchee, Yakima

POWER EQUIPMENT OPERATORS CLASSIFICATIONS

GROUP 1AAA - Cranes-over 300 tons, or 300 ft of boom (including jib with attachments)

GROUP 1AA - Cranes 200 to 300 tons, or 250 ft of boom (including jib with attachments); Tower crane over 175 ft in height, base to boom

GROUP 1A - Cranes, 100 tons thru 199 tons, or 150 ft of boom (including jib with attachments); Crane-overhead, bridge type, 100 tons and over; Tower crane up to 175 ft in height base to boom; Loaders-overhead, 8 yards and over; Shovels, excavator, backhoes-6 yards and over with attachments

GROUP 1 - Cableway; Cranes 45 tons thru 99 tons, under 150 ft of boom (including jib with attachments); Crane-overhead, bridge type, 45 tons thru 99 tons; Derricks on building work; Excavator, shovel, backhoes over 3 yards and under 6 yards; Hard tail end dump articulating off-road equipment 45 yards and over; Loader- overhead 6 yards to, but not including 8 yards; Mucking machine, mole, tunnel, drill and/or shield; Quad 9, HD 41, D-10; Remote control operator on rubber tired earth moving equipment; Rollagon; Scrapers-self propelled 45 yards and over; Slipform pavers; Transporters, all truck or track type

INFORMATIONAL COPY ONLY, NOT FOR BIDDING PURPOSES

GROUP 2 - Barrier machine (zipper); Batch Plant Operaor-Concrete; Bump Cutter; Cranes, 20 tons thru 44 tons with attachments; Crane-overhead, bridge type-20 tons through 44 tons; Chipper; Concrete Pump-truck mount with boom attachment; Crusher; Deck Engineer/Deck Winches (power); Drilling machine; Excavator, shovel, backhoe-3yards and under; Finishing Machine, Bidwell, Gamaco and similar equipment; Guardrail punch; Horizontal/directional drill operator; Loaders-overhead under 6 yards; Loaders-plant feed; Locomotives-all; Mechanics-all; Mixers-asphalt plant; Motor patrol graders-finishing; Piledriver (other than crane mount); Roto-mill,roto-grinder; Screedman, spreader, topside operator-Blaw Knox, Cedar Rapids, Jaeger, Caterpillar, Barbar Green; Scraper-self propelled, hard tail end dump, articulating off-road equipment-under 45 yards; Subgrade trimmer; Tractors, backhoes-over 75 hp; Transfer material service machine-shuttle buggy, blaw knox-roadtec; Truck crane oiler/driver-100 tons and over; Truck Mount portable conveyor; Yo Yo Pay dozer

GROUP 3 - Conveyors; Cranes-thru 19 tons with attachments; A-frame crane over 10 tons; Drill oilers-auger type, truck or crane mount; Dozers-D-9 and under; Forklift-3000 lbs. and over with attachments; Horizontal/directional drill locator; Outside hoists-(elevators and manlifts), air tuggers, strato tower bucket elevators; Hydralifts/boom trucks over 10 tons; Loader-elevating type, belt; Motor patrol grader-nonfinishing; Plant oiler-asphalt, crusher; Pumps-concrete; Roller, plant mix or multi-lift materials; Saws-concrete; Scrpers-concrete and carry-all; Service engineer-equipment; Trenching machines; Truck Crane Oiler/Driver under 100 tons; Tractors, backhoe 75 hp and under

GROUP 4 - Assistant Engineer; Bobcat; Brooms; Compressor; Concrete finish mahine-laser screed; Cranes-A frame-10 tons and under; Elevator and Manlift-permanent or shaft type; Gradechecker, Stakehop; Forklifts under 3000 lbs. with attachments; Hydralifts/boom trucks, 10 tons and under; Oil distributors, blower distribution and mulch seeding operator; Pavement breaker; Posthole digger, mechanical; Power plant; Pumps, water; Rigger and Bellman; Roller-other than plant mix; Wheel Tractors, farmall type; Shotcrete/gunite equipment operator

INFORMATIONAL COPY ONLY, NOT FOR BIDDING PURPOSES

Category B Projects: 95% of the basic hourly reate for each group plus full fringe benefits applicable to category A projects shall apply to the following projects. A Reduced rates may be paid on the following:

1. Projects involving work on structures such as buildings and bridges whose total value is less than $1.5 million excluding mechanical, electrical, and utility portions of the contract.

2. Projects of less than $1 million where no building is involved. Surfacing and paving included, but utilities excluded.

3. Marine projects (docks, wharfs, etc.) less than $150,000.

HANDLING OF HAZARDOUS WASTE MATERIALS:

Personnel in all craft classifications subject to working inside a federally designated hazardous perimeter shall be elgible for compensation in accordance with the following group schedule relative to the level of hazardous waste as outlined in the specific hazardous waste project site safety plan.

H-1 Base wage rate when on a hazardous waste site when not outfitted with protective clothing

H-2 Class "C" Suit - Base wage rate plus $ .25 per hour.

H-3 Class "B" Suit - Base wage rate plus $ .50 per hour.

H-4 Class "A" Suit - Base wage rate plus $ .75 per hour.

Zone Differential (Add to Zone 1 rates):
Zone 2 (26-45 radius miles) - $ .70
Zone 3 (Over 45 radius miles) - $1.00

BASEPOINTS: Aberdeen, Bellingham, Bremerton, Everett, Kent, Mount Vernon, Port Angeles, Port Townsend, Seattle, Shelton, Wenatchee, Yakima

INFORMATIONAL COPY ONLY, NOT FOR BIDDING PURPOSES

POWER EQUIPMENT OPERATORS CLASSIFICATIONS

GROUP 1AAA - Cranes-over 300 tons, or 300 ft of boom (including jib with attachments)

GROUP 1AA - Cranes 200 to 300 tons, or 250 ft of boom (including jib with attachments); Tower crane over 175 ft in height, base to boom

GROUP 1A - Cranes, 100 tons thru 199 tons, or 150 ft of boom (including jib with attachments); Crane-overhead, bridge type, 100 tons and over; Tower crane up to 175 ft in height base to boom; Loaders-overhead, 8 yards and over; Shovels, excavator, backhoes-6 yards and over with attachments

GROUP 1 - Cableway; Cranes 45 tons thru 99 tons, under 150 ft of boom (including jib with attachments); Crane-overhead, bridge type, 45 tons thru 99 tons; Derricks on building work; Excavator, shovel, backhoes over 3 yards and under 6 yards; Hard tail end dump articulating off-road equipment 45 yards and over; Loader- overhead 6 yards to, but not including 8 yards; Mucking machine, mole, tunnel, drill and/or shield; Quad 9, HD 41, D-10; Remote control operator on rubber tired earth moving equipment; Rollagon; Scrapers-self propelled 45 yards and over; Slipform pavers; Transporters, all truck or track type

GROUP 2 - Barrier machine (zipper); Batch Plant Operaor-Concrete; Bump Cutter; Cranes, 20 tons thru 44 tons with attachments; Crane-overhead, bridge type-20 tons through 44 tons; Chipper; Concrete Pump-truck mount with boom attachment; Crusher; Deck Engineer/Deck Winches (power); Drilling machine; Excavator, shovel, backhoe-3 yards and under; Finishing Machine, Bidwell, Gamaco and similar equipment; Guardrail punch; Horizontal/directional drill operator; Loaders-overhead under 6 yards; Loaders-plant feed; Locomotives-all; Mechanics-all; Mixers-asphalt plant; Motor patrol graders-finishing; Piledriver (other than crane mount); Roto-mill,roto-grinder; Screedman, spreader, topside operator-Blaw Knox, Cedar Rapids, Jaeger, Caterpillar, Barbar Green; Scraper-self propelled, hard tail end dump, articulating off-road equipment-under 45 yards; Subgrade trimmer; Tractors, backhoes-over 75 hp; Transfer material service machine-shuttle buggy, blaw knox-roadtec; Truck crane oiler/driver-100 tons and over; Truck Mount portable conveyor; Yo Yo Pay dozer

INFORMATIONAL COPY ONLY, NOT FOR BIDDING PURPOSES

GROUP 3 - Conveyors; Cranes-thru 19 tons with attachments; A-frame crane over 10 tons; Drill oilers-auger type, truck or crane mount; Dozers-D-9 and under; Forklift-3000 lbs. and over with attachments; Horizontal/directional drill locator; Outside hoists-(elevators and manlifts), air tuggers, strato tower bucket elevators; Hydralifts/boom trucks over 10 tons; Loader-elevating type, belt; Motor patrol grader-nonfinishing; Plant oiler- asphalt, crusher; Pumps-concrete; Roller, plant mix or multi-lift materials; Saws-concrete; Scrpers-concrete and carry-all; Service engineer-equipment; Trenching machines; Truck Crane Oiler/Driver under 100 tons; Tractors, backhoe 75 hp and under

GROUP 4 - Assistant Engineer; Bobcat; Brooms; Compressor; Concrete finish mahine-laser screed; Cranes-A frame-10 tons and under; Elevator and Manlift-permanent or shaft type; Gradechecker, Stakehop; Forklifts under 3000 lbs. with attachments; Hydralifts/boom trucks, 10 tons and under; Oil distributors, blower distribution and mulch seeding operator; Pavement breaker; Posthole digger, mechanical; Power plant; Pumps, water; Rigger and Bellman; Roller-other than plant mix; Wheel Tractors, farmall type; Shotcrete/gunite equipment operator

CATEGORY B PROJECTS: 95% OF THE BASIC HOURLY RATE FOR EACH GROUP PLUS FULL FRINGE BENEFITS APPLICABLE TO CATEGORY A PROJECTS SHALL APPLY TO THE FOLLOWING PROJECTS. REDUCED RATES MAY BE PAID ON THE FOLLOWING:

1. Projects involving work on structures such as buildings and bridges whose total value is less than $1.5 million excluding mechanical, electrical, and utility portions of the contract.
2. Projects of less than $1 million where no building is involved. Surfacing and paving including, but utilities excluded.
3. Marine projects (docks, wharfs, ect.) less than $150,000.

HANDLING OF HAZARDOUS WASTE MATERIALS: Personnel in all craft classifications subject to working inside a federally designed hazardous perimeter shall be elgible for compensation in accordance with the following group schedule relative to the level of hazardous waste as outlined in the specific hazardous waste project site safety plan.

H-1 Base wage rate when on a hazardous waste site when not outfitted with protective clothing.
H-2 Class "C" Suit - Base wage rate plus $.25 per hour.
H-3 Class "B" Suit - Base wage rate plus $.50 per hour.
H-4 Class "A" Suit - Base wage rate plus $.75 per hour.

INFORMATIONAL COPY ONLY, NOT FOR BIDDING PURPOSES

* ENGI0370-002 06/01/2014

ADAMS, ASOTIN, BENTON, CHELAN (EAST OF THE 120TH MERIDIAN), COLUMBIA, DOUGLAS (EAST OF THE 120TH MERIDIAN), FERRY, FRANKLIN, GARFIELD, GRANT, LINCOLN, OKANOGAN (EAST OF THE 120TH MERIDIAN), PEND OREILLE, SPOKANE, STEVENS, WALLA WALLA, WHITMAN AND YAKIMA (EAST OF THE 120TH MERIDIAN) COUNTIES

ZONE 1:

	Rates	Fringes
POWER EQUIPMENT OPERATOR		
GROUP 1	$ 25.86	13.15
GROUP 2	$ 26.18	13.15
GROUP 3	$ 26.79	13.15
GROUP 4	$ 26.95	13.15
GROUP 5	$ 27.11	13.15
GROUP 6	$ 27.39	13.15
GROUP 7	$ 27.66	13.15
GROUP 8	$ 28.76	13.15

ZONE DIFFERENTIAL (Add to Zone 1 rate): Zone 2 - $2.00

Zone 1: Within 45 mile radius of Spokane, Pasco, Washington; Lewiston, Idaho

Zone 2: Outside 45 mile radius of Spokane, Pasco, Washington; Lewiston, Idaho

POWER EQUIPMENT OPERATORS CLASSIFICATIONS

GROUP 1: Bit Grinders; Bolt Threading Machine; Compressors (under 2000 CFM, gas, diesel, or electric power); Deck Hand; Fireman & Heater Tender; Hydro-seeder, Mulcher, Nozzleman; Oiler Driver, & Cable Tender, Mucking Machine; Pumpman; Rollers, all types on subgrade, including seal and chip coatings (farm type, Case, John Deere & similar, or Compacting Vibrator), except when pulled by Dozer with operable blade; Welding Machine; Crane Oiler-Driver (CLD required) & Cable Tender, Mucking Machine

INFORMATIONAL COPY ONLY, NOT FOR BIDDING PURPOSES

GROUP 2: A-frame Truck (single drum); Assistant Refrigeration Plant (under 1000 ton); Assistant Plant Operator, Fireman or Pugmixer (asphalt); Bagley or Stationary Scraper; Belt Finishing Machine; Blower Operator (cement); Cement Hog; Compressor (2000 CFM or over, 2 or more, gas diesel or electric power); Concrete Saw (multiple cut); Distributor Leverman; Ditch Witch or similar; Elevator Hoisting Materials; Dope Pots (power agitated); Fork Lift or Lumber Stacker, hydra-lift & similar; Gin Trucks (pipeline); Hoist, single drum; Loaders (bucket elevators and conveyors); Longitudinal Float; Mixer (portable-concrete); Pavement Breaker, Hydra-Hammer & similar; Power Broom; Railroad Ballast Regulation Operator (self-propelled); Railroad Power Tamper Operator (self-propelled); Railroad Tamper Jack Operator (self-propelled; Spray Curing Machine (concrete); Spreader Box (self-propelled); Straddle Buggy (Ross & similar on construction job only); Tractor (Farm type R/T with attachment, except Backhoe); Tugger Operator

GROUP 3: A-frame Truck (2 or more drums); Assistant Refrigeration Plant & Chiller Operator (over 1000 ton); Backfillers (Cleveland & similar); Batch Plant & Wet Mix Operator, single unit (concrete); Belt-Crete Conveyors with power pack or similar; Belt Loader (Kocal or similar); Bending Machine; Bob Cat (Skid Steer); Boring Machine (earth); Boring Machine (rock under 8 inch bit) (Quarry Master, Joy or similar); Bump Cutter (Wayne, Saginau or similar); Canal Lining Machine (concrete); Chipper (without crane); Cleaning & Doping Machine (pipeline); Deck Engineer; Elevating Belt-type Loader (Euclid, Barber Green & similar); Elevating Grader-type Loader (Dumor, Adams or similar); Generator Plant Engineers (diesel or electric); Gunnite Combination Mixer & Compressor; Locomotive Engineer; Mixermobile; Mucking Machine; Posthole Auger or Punch; Pump (grout or jet); Soil Stabilizer (P & H or similar); Spreader Machine; Dozer/Tractor (up to D-6 or equivalent) and Traxcavator; Traverse Finish Machine; Turnhead Operator

GROUP 4: Concrete Pumps (squeeze-crete, flow-crete, pump-crete, Whitman & similar); Curb Extruder (asphalt or concrete); Drills (churn, core, calyx or diamond); Equipment Serviceman; Greaser & Oiler; Hoist (2 or more drums or Tower Hoist); Loaders (overhead & front-end, under 4 yds. R/T); Refrigeration Plant Engineer (under 1000 ton); Rubber-tired Skidders (R/T with or without attachments); Surface Heater & Plant Machine; Trenching Machines (under 7 ft. depth capacity); Turnhead (with re-screening); Vacuum Drill (reverse circulation drill under 8 inch bit)

INFORMATIONAL COPY ONLY, NOT FOR BIDDING PURPOSES

GROUP 5: Backhoe (under 45,000 gw); Backhoe & Hoe Ram (under 3/4 yd.); Carrydeck & Boom Truck (under 25 tons); Cranes (25 tons & under), all attachments including clamshell, dragline; Derricks & Stifflegs (under 65 tons); Drilling Equipment(8 inch bit & over) (Robbins, reverse circulation & similar); Hoe Ram; Piledriving Engineers; Paving (dual drum); Railroad Track Liner Operaotr (self-propelled); Refrigeration Plant Engineer (1000 tons & over); Signalman (Whirleys, Highline Hammerheads or similar); Grade Checker

GROUP 6: Asphalt Plant Operator; Automatic Subgrader (Ditches & Trimmers)(Autograde, ABC, R.A. Hansen & similar on grade wire); Backhoe (45,000 gw and over to 110,000 gw); Backhoes & Hoe Ram (3/4 yd. to 3 yd.); Batch Plant (over 4 units); Batch & Wet Mix Operator (multiple units, 2 & incl. 4); Blade Operator (motor patrol & attachments); Cable Controller (dispatcher); Compactor (self-propelled with blade); Concrete Pump Boom Truck; Concrete Slip Form Paver; Cranes (over 25 tons, to and including 45 tons), all attachments including clamshell, dragline; Crusher, Grizzle & Screening Plant Operator; Dozer, 834 R/T & similar; Drill Doctor; Loader Operator (front-end & overhead, 4 yds. incl. 8 yds.); Multiple Dozer Units with single blade; Paving Machine (asphalt and concrete); Quad-Track or similar equipment; Rollerman (finishing asphalt pavement); Roto Mill (pavement grinder); Scrapers, all, rubber-tired; Screed Operator; Shovel(under 3 yds.); Trenching Machines (7 ft. depth & over); Tug Boat Operator Vactor guzzler, super sucker; Lime Batch Tank Operator (REcycle Train); Lime Brain Operator (Recycle Train); Mobile Crusher Operator (Recycle Train)

GROUP 7: Backhoe (over 110,000 gw); Backhoes & Hoe Ram (3 yds & over); Blade (finish & bluetop) Automatic, CMI, ABC, Finish Athey & Huber & similar when used as automatic; Cableway Operators; Concrete Cleaning/Decontamination machine operator; Cranes (over 45 tons to but not including 85 tons), all attachments including clamshell and dragine; Derricks & Stiffleys (65 tons & over); Elevating Belt (Holland type); Heavy equipment robotics operator; Loader (360 degrees revolving Koehring Scooper or similar); Loaders (overhead & front-end, over 8 yds. to 10 yds.); Rubber-tired Scrapers (multiple engine with three or more scrapers); Shovels (3 yds. & over); Whirleys & Hammerheads, ALL; H.D. Mechanic; H.D. Welder; Hydraulic Platform Trailers (Goldhofer, Shaurerly andSimilar); Ultra High Pressure Wateriet Cutting Tool System Operator (30,000 psi); Vacuum Blasting Machine Operator

INFORMATIONAL COPY ONLY - NOT FOR BIDDING PURPOSES

GROUP 8: Cranes (85 tons and over, and all climbing, overhead,rail and tower), all attachments including clamshell, dragline; Loaders (overhead and front-end, 10 yards and over); Helicopter Pilot

BOOM PAY: (All Cranes, Including Tower)
180 ft to 250 ft $ .50 over scale
Over 250 ft $ .80 over scale

NOTE:
In computing the length of the boom on Tower Cranes, they shall be measured from the base of the Tower to the point of the boom.

HAZMAT:
Anyone working on HAZMAT jobs, working with supplied air shall receive $1.00 an hour above classification.

ENGI0612-012 06/01/2014

LEWIS,PIERCE, PACIFIC (portion lying north of a parallel line extending west from the northern boundary of Wahkaikum County to the sea) AND THURSTON COUNTIES

ON PROJECTS DESCRIBED IN FOOTNOTE A BELOW, THE RATE FOR EACH GROUP SHALL BE 90% OF THE BASE RATE PLUS FULL FRINGE BENEFITS. ON ALL OTHER WORK, THE FOLLOWING RATES APPLY.

Zone 1 (0-25 radius miles):

	Rates	Fringes
POWER EQUIPMENT OPERATOR		
GROUP 1A	$ 38.39	17.40
GROUP 1AA	$ 38.96	17.40
GROUP 1AAA	$ 39.52	17.40
GROUP 1	$ 37.84	17.40
GROUP 2	$ 37.35	17.40
GROUP 3	$ 36.93	17.40
GROUP 4	$ 34.57	17.40

Zone Differential (Add to Zone 1 rates):
Zone 2 (26-45 radius miles) = $1.00
Zone 3 (Over 45 radius miles) - $1.30

BASEPOINTS: CENTRALIA, OLYMPIA, TACOMA

INFORMATIONAL COPY ONLY, NOT FOR BIDDING PURPOSES

POWER EQUIPMENT OPERATORS CLASSIFICATIONS

GROUP 1 AAA - Cranes-over 300 tons or 300 ft of boom (including jib with attachments)

GROUP 1AA - Cranes- 200 tonsto 300 tons, or 250 ft of boom (including jib with attachments; Tower crane over 175 ft in height, bas to boom

GROUP 1A - Cranes, 100 tons thru 199 tons, or 150 ft of boom (including jib with attachments); Crane-overhead, bridge type, 100 tons and over; Tower crane up to 175 ft in height base to boom; Loaders-overhead, 8 yards and over; Shovels, excavator, backhoes-6 yards and over with attachments

GROUP 1 - Cableway; Cranes 45 tons thru 99 tons under 150 ft of boom (including jib with attachments); Crane-overhead, bridge type, 45 tons thru 99 tons; Derricks on building work; Excavator, shovel, backhoes over 3 yards and under 6 yards; Hard tail end dump articulating off-road equipment 45 yards and over; Loader- overhead, 6 yards to, but not including, 8 yards; Mucking machine, mole, tunnel, drill and/or shield; Quad 9 HD 41, D-10; Remote control operator on rubber tired earth moving equipment; Rollagon; Scrapers-self-propelled 45 yards and over; Slipform pavers; Transporters, all track or truck type

GROUP 2 - Barrier machine (zipper); Batch Plant Operator-concrete; Bump Cutter; Cranes, 20 tons thru 44 tons with attachments; Crane-Overhead, bridge type, 20 tons through 44 tons; Chipper; Concrete pump-truck mount with boom attachment; Crusher; Deck engineer/deck winches (power); Drilling machine; Excavator, shovel, backhoe-3 yards and under; Finishing machine, Bidwell, Gamaco and similar equipment; Guardrail punch; Loaders, overhead under 6 yards; Loaders-plant feed; Locomotives-all; Mechanics- all; Mixers, asphalt plant; Motor patrol graders, finishing; Piledriver (other than crane mount); Roto-mill, roto-grinder; Screedman, spreader, topside operator-Blaw Knox, Cedar Rapids, Jaeger, Caterpillar, Barbar Green; Scraper-self- propelled, hard tail end dump, articulating off-road equipment- under 45 yards; Subgrader trimmer; Tractors, backhoe over 75 hp; Transfer material service machine-shuttle buggy, Blaw Knox- Roadtec; Truck Crane oiler/driver-100 tons and over; Truck Mount Portable Conveyor; Yo Yo pay

INFORMATIONAL COPY ONLY, NOT FOR BIDDING PURPOSES

GROUP 3 - Conveyors; Cranes through 19 tons with attachments; Crane-A-frame over 10 tons; Drill oilers-auger type, truck or crane mount; Dozer-D-9 and under; Forklift-3000 lbs. and over with attachments; Horizontal/directional drill locator; Outside Hoists-(elevators and manlifts), air tuggers, strato tower bucket elevators; Hydralifts/boom trucks over 10 tons; Loaders-elevating type, belt; Motor patrol grader-nonfinishing; Plant oiler- asphalt, crusher; Pump-Concrete; Roller, plant mix or multi-lfit materials; Saws-concrete; Scrapers, concrete and carry all; Service engineers-equipment; Trenching machines; Truck crane oiler/driver under 100 tons; Tractors, backhoe under 75 hp

GROUP 4 - Assistant Engineer; Bobcat; Brooms; Compressor; Concrete Finish Machine-laser screed; Cranes A-frame 10 tons and under; Elevator and manlift (permanent and shaft type); Forklifts-under 3000 lbs. with attachments; Gradechecker, stakehop; Hydralifts/boom trucks, 10 tons and under; Oil distributors, blower distribution and mulch seeding operator; Pavement breaker; Posthole digger-mechanical; Power plant; Pumps-water; Rigger and Bellman; Roller-other than plant mix; Wheel Tractors, farmall type; Shotcrete/gunite equipment operator

FOOTNOTE A- Reduced rates may be paid on the following:

1. Projects involving work on structures such as buildings and bridges whose total value is less than $1.5 million excluding mechanical, electrical, and utility portions of the contract.

2. Projects of less than $1 million where no building is involved. Surfacing and paving included, but utilities excluded.

3. Marine projects (docks, wharfs, etc.) less than $150,000.

HANDLING OF HAZARDOUS WASTE MATERIALS: Personnel in all craft classifications subject to working inside a federally designated hazardous perimeter shall be elgible for compensation in accordance with the following group schedule relative to the level of hazardous waste as outlined in the specific hazardous waste project site safety plan.

H-1 Base wage rate when on a hazardous waste site when not outfitted with protective clothing, Class "D" Suit - Base wage rate plus $ .50 per hour.
H-2 Class "C" Suit - Base wage rate plus $1.00 per hour.
H-3 Class "B" Suit - Base wage rate plus $1.50 per hour.
H-4 Class "A" Suit - Base wage rate plus $2.00 per hour.

INFORMATIONAL COPY ONLY, NOT FOR BIDDING PURPOSES

ENGI0701-002 01/01/2014

CLARK, COWLITZ, KLICKKITAT, PACIFIC (SOUTH), SKAMANIA, AND WAHKIAKUM COUNTIES

POWER RQUIPMENT OPERATORS: ZONE 1

	Rates	Fringes
Power equipment operators: (See Footnote A)		
GROUP 1	$ 38.25	13.70
GROUP 1A	$ 40.16	13.70
GROUP 1B	$ 42.08	13.70
GROUP 2	$ 36.56	13.70
GROUP 3	$ 35.54	13.70
GROUP 4	$ 34.56	13.70
GROUP 5	$ 33.43	13.70
GROUP 6	$ 30.34	13.70

Zone Differential (add to Zone 1 rates):
Zone 2 - $3.00
Zone 3 - $6.00

INFORMATIONAL COPY ONLY, NOT FOR BIDDING PURPOSES

For the following metropolitan counties: MULTNOMAH; CLACKAMAS; MARION; WASHINGTON; YAMHILL; AND COLUMBIA; CLARK; AND COWLITZ COUNTY, WASHINGTON WITH MODIFICATIONS AS INDICATED:

All jobs or projects located in Multnomah, Clackamas and Marion Counties, West of the western boundary of Mt. Hood National Forest and West of Mile Post 30 on Interstate 84 and West of Mile Post 30 on State Highway 26 and West of Mile Post 30 on Highway 22 and all jobs or projects located in Yamhill County, Washington County and Columbia County and all jobs or porjects located in Clark & Cowlitz County, Washington except that portion of Cowlitz County in the Mt. St. Helens "Blast Zone" shall receive Zone I pay for all classifications.

All jobs or projects located in the area outside the identified boundary above, but less than 50 miles from the Portland City Hall shall receive Zone II pay for all classifications.

All jobs or projects located more than 50 miles from the Portland City Hall, but outside the identified border above, shall receive Zone III pay for all classifications.

For the following cities: ALBANY; BEND; COOS BAY; EUGENE; GRANTS PASS; KLAMATH FALLS; MEDFORD; ROSEBURG

All jobs or projects located within 30 miles of the respective city hall of the above mentioned cities shall receive Zone I pay for all classifications.

All jobs or projects located more than 30 miles and less than 50 miles from the respective city hall of the above mentioned cities shall receive Zone II pay for all classifications.

All jobs or projects located more than 50 miles from the respective city hall of the above mentioned cities shall receive Zone III pay for all classifications.

INFORMATIONAL COPY ONLY, NOT FOR BIDDING PURPOSES

POWER EQUIPMENT OPERATORS CLASSIFICATIONS

GROUP 1: CONCRETE: Batch Plant and/or Wet Mix Operator, three units or more; CRANE: Helicopter Operator, when used in erecting work; Whirley Operator, 90 ton and over; LATTICE BOOM CRANE: Operator 200 tons through 299 tons, and/or over 200 feet boom; HYDRAULIC CRANE: Hydraulic Crane Operator 90 tons through 199 tons with luffing or tower attachments; FLOATING EQUIPMENT: Floating Crane, 150 ton but less than 250 ton

GROUP 1A: HYDRAULIC CRANE: Hydraulic Operator, 200 tons and over (with luffing or tower attachment); LATTICE BOOM CRANE: Operator, 200 tons through 299 tons, with over 200 feet boom; FLOATING EQUIPMENT: Floating Crane 250 ton and over

GROUP 1B: LATTICE BOOM CRANE: Operator, 300 tons through 399 tons with over 200 feet boom; Operator 400 tons and over; FLOATING EQUIPMENT: Floating Crane 350 ton and over

GROUP 2: ASPHALT: Asphalt Plant Operator (any type); Roto Mill, pavement profiler, operator, 6 foot lateral cut and over; BLADE: Auto Grader or "Trimmer" (Grade Checker required); Blade Operator, Robotic; BULLDOZERS: Bulldozer operator over 120,000 lbs and above; Bulldozer operator, twin engine; Bulldozer Operator,tandem, quadnine, D10, D11, and similar type; Bulldozere Robotic Equipment (any type; CONCRETE: Batch Plant and/or Wet Mix Operator, one and two drum; Automatic Concrete Slip Form Paver Operator; Concrete Canal Line Operator; Concrete Profiler, Diamond Head; CRANE: Cableway Operator, 25 tons and over; HYDRAULIC CRANE: Hydraulic crane operator 90 tons through 199 tons (without luffing or tower attachment); TOWER/WHIRLEY OPERATOR: Tower Crane Operator; Whirley Operator, under 90 tons; LATTICE BOOM CRANE: 90 through 199 tons and/or 150 to 200 feet boom; CRUSHER: Crusher Plant Operator; FLOATING EQUIPMENT: Floating Clamshell, etc.operator, 3 cu. yds. and over; Floating Crane (derrick barge) Operator, 30 tons but less than 150 tons; LOADERS: Loader operator, 120,000 lbs. and above; REMOTE CONTROL: Remote controlled earth-moving equipment; RUBBER-TIRED SCRAPERS: Rubber-tired scraper operator, with tandem scrapers, multi-engine; SHOVEL, DRAGLINE, CLAMSHELL, SKOOPER OPERATOR: Shovel, Dragline, Clamshell, operator 5 cu. yds and over; TRENCHING MACHINE: Wheel Excavator, under 750 cu. yds. per hour (Grade Oiler required); Canal Trimmer (Grade Oiler required); Wheel Excavator, over 750 cu. yds. per hour; Band Wagon (in conjunction with wheel excavator); UNDERWATER EQUIPMENT: Underwater Equipment Operator, remote or otherwise; HYDRAULIC HOES-EXCAVATOR: Excavator over 130,000 lbs.; HYDRAULIC CRANE: Hydraulic crane operator, 50 tons through 89 tons (with luffing or tower attachment);

INFORMATIONAL COPY ONLY, NOT FOR BIDDING PURPOSES

GROUP 3: BULLDOZERS: Bulldozer operator, over 70,000 lbs. up to and including 120,000 lbs.; HYDRAULIC CRANE: Hydraulic crane operator, 50 tons through 89 tons (without luffing or tower attachment); LATTICE BOOM CRANES: Lattice Boom Crane-50 through 89 tons (and less than 150 feet boom); FORKLIFT: Rock Hound Operator; HYDRAULIC HOES-EXCAVATOR: excavator over 80,000 lbs. through 130,000 lbs.; LOADERS: Loader operator 60,000 and less than 120,000; RUBBER-TIRED SCRAPERS: Scraper Operator, with tandem scrapers; Self-loading, paddle wheel, auger type, finish and/or 2 or more units; SHOVEL, DRAGLINE, CLAMSHELL,SKOOPER OPERATOR: Shovel, Dragline, Clamshell operators 3 cu. yds. but less than 5 cu yds.

GROUP 4: ASPHALT: Screed Operator; Asphalt Paver operator (screeman required); BLADE: Blade operator; Blade operator, finish; Blade operator, externally controlled by electronic, mechanical hydraulic means; Blade operator, multi-engine; BULLDOZERS: Bulldozer Operator over 20,000 lbs and more than 100 horse up to 70,000 lbs; Drill Cat Operator; Side-boom Operator; Cable-Plow Operator (any type); CLEARING: Log Skidders; Chippers; Incinerator; Stump Splitter (loader mounted or similar type); Stump Grinder (loader mounted or similar type; Tub Grinder; Land Clearing Machine (Track mounted forestry mowing & grinding machine); Hydro Axe (loader mounted or similar type); COMPACTORS SELF-PROPELLED: Compactor Operator, with blade; Compactor Operator, multi-engine; Compactor Operator, robotic; CONCRETE: Mixer Mobile Operator; Screed Operator; Concrete Cooling Machine Operator; Concrete Paving Road Mixer; Concrete Breaker; Reinforced Tank Banding Machine (K-17 or similar types); Laser Screed; CRANE: Chicago boom and similar types; Lift Slab Machine Operator; Boom type lifting device, 5 ton capacity or less; Hoist Operator, two (2) drum; Hoist Operator, three (3) or more drums; Derrick Operator, under 100 ton; Hoist Operator, stiff leg, guy derrick or similar type, 50 ton and over; Cableway Operator up to twenty (25) ton; Bridge Crane Operator, Locomotive, Gantry, Overhead; Cherry Picker or similar type crane; Carry Deck Operator; Hydraulic Crane Operator, under 50 tons; LATTICE BOOM CRANE OPERATOR: Lattice Boom Crane Operator, under 50 tons; CRUSHER: Generator Operator; Diesel-Electric Engineer; Grizzley Operator; Drill Doctor; Boring Machine Operator; Driller-Percussion, Diamond, Core, Cable, Rotary and similar type; Cat Drill (John Henry); Directional Drill Operator over 20,000 lbs pullback; FLOATING EQUIPMENT: Diesel-electric Engineer; Jack Operator, elevating barges, Barge Operator, self-unloading; Piledriver Operator (not crane type) (Deckhand required); Floating Clamshelll, etc. Operator, under 3 cu. yds. (Fireman or Diesel-Electric Engineer required); Floating Crane (derrick barge) Operator, less than 30 tons; GENERATORS: Generator Operator; Diesel-electric Engineer; GUARDRAIL EQUIPMENT: Guardrail Punch Operator (all types); Guardrail Auger Operator (all types); Combination Guardrail machines, i.e., punch auger, etc.; HEATING PLANT: Surface

INFORMATIONAL COPY ONLY, NOT FOR BIDDING PURPOSES

Heater and Planer Operator; HYDRAULIC HOES EXCAVATOR: Robotic Hydraulic backhoe operator, track and wheel type up to and including 20,0000 lbs. with any or all attachments; Excavator Operator over 20,000 lbs through 80,000 lbs.; LOADERS: Belt Loaders, Kolman and Ko Cal types; Loaders Operator, front end and overhead, 25,000 lbs and less than 60,000 lbs; Elevating Grader Operator by Tractor operator, Sierra, Euclid or similar types; PILEDRIVERS: Hammer Operator; Piledriver Operator (not crane type); PIPELINE, SEWER WATER: Pipe Cleaning Machine Operator; Pipe Doping Machine Operator; Pipe Bending Machine Operator; Pipe Wrapping Machine Operator; Boring Machine Operator; Back Filling Machine Operator; REMOTE CONTROL: Concrete Cleaning Decontamination Machine Operator; Ultra High Pressure Water Jet Cutting Tool System Operator/Mechanic; Vacuum Blasting Machine Operator/mechanic; REPAIRMEN, HEAVY DUTY: Diesel Electric Engineer (Plant or Floating; Bolt Threading Machine operator; Drill Doctor (Bit Grinder); H.D. Mechanic; Machine Tool Operator; RUBBER-TIRED SCRAPERS: Rubber-tired Scraper Operator,single engine, single scraper; Self-loading, paddle wheel, auger type under 15 cu. yds.; Rubber-tired Scraper Operator, twin engine; Rubber-tired Scraper Operator, with push- ull attachments; Self Loading, paddle wheel, auger type 15 cu. yds. and over, single engine; Water pulls, water wagons; SHOVEL, DRAGLINE, CLAMSHELL, SKOOPER OPERATOR: Diesel Electric Engineer; Stationay Drag Scraper Operator; Shovel, Dragline, Clamshell, Operator under 3 cy yds.; Grade-all Operator; SURFACE (BASE) MATERIAL: Blade mounted spreaders, Ulrich and similar types; TRACTOR-RUBBERED TIRED: Tractor operator, rubber-tired, over 50 hp flywheel; Tractor operator, with boom attachment; Rubber-tired dozers and pushers (Michigan, Cat, Hough type); Skip Loader, Drag Box; TRENCHING MACHINE: Trenching Machine operator, digging capacity over 3 ft depth; Back filling machine operator; TUNNEL: Mucking machine operator

INFORMATIONAL COPY ONLY, NOT FOR BIDDING PURPOSES

GROUP 5: ASPHALT: Extrusion Machine Operator; Roller Operator (any asphalt mix); Asphalt Burner and Reconditioner Operator (any type); Roto-Mill, pavement profiler, ground man; BULLDOZERS: Bulldozer operator, 20,000 lbs. or less or 100 horse or less; COMPRESSORS: Compressor Operator (any power), over 1,250 cu. ft. total capacity; COMPACTORS: Compactor Operator, including vibratory; Wagner Pactor Operator or similar type (without blade); CONCRETE: Combination mixer and Compressor Operator, gunite work; Concrete Batch Plant Quality Control Operator; Beltcrete Operator; Pumpcrete Operator (any type); Pavement Grinder and/or Grooving Machine Operator (riding type); Cement Pump Operator, Fuller-Kenyon and similar; Concrete Pump Operator; Grouting Machine Operator; Concrete mixer operator, single drum, under (5) bag capacity; Cast in place pipe laying machine; maginnis Internal Full slab vibrator operator; Concrete finishing mahine operator, Clary, Johnson, Bidwell, Burgess Bridge deck or similar type; Curb Machine Operator, mechanical Berm, Curb and/or Curb and Gutter; Concrete Joint Machine Operator; Concrete Planer Operator; Tower Mobile Operator; Power Jumbo Operator setting slip forms in tunnels; Slip Form Pumps, power driven hydraulic lifting device for concrete forms; Concrete Paving Machine Operator; Concrete Finishing Machine Operator; Concrete Spreader Operator; CRANE: Helicopter Hoist Operator; Hoist Operator, single drum; Elevator Operator; A-frame Truck Operator, Double drum; Boom Truck Operator; HYDRAULIC CRANE OPERATOR: Hydraulic Boom Truck, Pittman; DRILLING: Churm Drill and Earth Boring Machine Operator; Vacuum Truck; Directional Drill Operator over 20,000 lbs pullback; FLOATING EQUIPMENT: Fireman; FORKLIFT: Fork Lift, over 10 ton and/or robotic; HYDRAULIC HOES EXCAVATORS: Hydraulic Backhoe Operator, wheel type (Ford, John Deere, Case type); Hydraulic Backhoe Operator track type up to and including 20,000 lbs.; LOADERS: Loaders, rubber- tired type, less than 25,000 lbs; Elevating Grader Operator, Tractor Towed requiring Operator or Grader; Elevating loader operator, Athey and similar types; OILERS: Service oiler (Greaser); PIPELINE-SEWER WATER: Hydra hammer or simialr types; Pavement Breaker Operator; PUMPS: Pump Operator, more than 5 (any size); Pot Rammer Operator; RAILROAD EQUIPMENT: Locomotive Operator, under 40 tons; Ballast Regulator Operator; Ballast Tamper Multi-Purpose Operator; Track Liner Operator; Tie Spacer Operator; Shuttle Car Operator; Locomotive Operator, 40 tons and over; MATERIAL HAULRS: Cat wagon DJBs Volvo similar types; Conveyored material hauler; SURFACING (BASE) MATERIAL: Rock Spreaders, self-propelled; Pulva-mixer or similar types; Chiip Spreading machine operator; Lime spreading operator, construction job siter; SWEEPERS: Sweeper operator (Wayne type) self-propelled construction job site; TRACTOR-RUBBER TIRED: Tractor operator, rubber-tired, 50 hp flywheel and under; Trenching machine operator, maximum digging capacity 3 ft depth; TUNNEL: Dinkey

INFORMATIONAL COPY ONLY, NOT FOR BIDDING PURPOSES

GROUP 6: ASPHALT: Plant Oiler; Plant Fireman; Pugmill Operator (any type); Truck mounted asphalt spreader, with screed; COMPRESSORS: Compressor Operator (any power), under 1,250 cu. ft. total capacity; CONCRETE: Plant Oiler, Assistant Conveyor Operator; Conveyor Operator; Mixer Box Operator (C.T.B., dry batch, etc.); Cement Hog Operator; Concrete Saw Operator; Concrete Curing Machine Operator (riding type); Wire Mat or Brooming Machine Operator; CRANE: Oiler; Fireman, all equipment; Truck Crane Oiler Driver; A-frame Truck Operator, single drum; Tugger or Coffin Type Hoist Operator; CRUSHER: Crusher Oiler; Crusher Feederman; CRUSHER: Crusher oiler; Crusher feederman; DRILLING: Drill Tender; Auger Oiler; FLOATING EQUIPMENT: Deckhand; Boatman; FORKLIFT: Self-propelled Scaffolding Operator, construction job site (exclduing working platform); Fork Lift or Lumber Stacker Operator, construction job site; Ross Carrier Operator, construction job site; Lull Hi-Lift Operator or Similar Type; GUARDRAIL EQUIPMENT: Oiler; Auger Oiler; Oiler, combination guardrail machines; Guardrail Punch Oiler; HEATING PLANT: Temporary Heating Plant Operator; LOADERS: Bobcat, skid steer (less than 1 cu yd.); Bucket Elevator Loader Operator, BarberGreene and similar types; OILERS: Oiler; Guardrail Punch Oiler; Truck Crane Oiler-Driver; Auger Oiler; Grade Oiler, required to check grade; Grade Checker; Rigger; PIPELINE-SEWER WATER: Tar Pot Fireman; Tar Pot Fireman (power agitated); PUMPS: Pump Operator (any power); Hydrostatic Pump Operator; RAILROAD EQUIPMENT: Brakeman; Oiler; Switchman; Motorman; Ballast Jack Tamper Operator; SHOVEL, DRAGLINE, CLAMSHELL, SKOOPER, ETC. OPERATOR: Oiler, Grade Oiler (required to check grade); Grade Checker; Fireman; SWEEPER: Broom operator, self propelled, construction job site; SURFACING (BASE) MATERIAL: Roller Operator, grading of base rock (not asphalt); Tamping Machine operartor, mechanical, self-propelled; Hydrographic Seeder Machine Operator; TRENCHING MACHINE: Oiler; Grade Oiler; TUNNEL: Conveyor operator; Air filtration equipment operator

---

INFORMATIONAL COPY ONLY, NOT FOR BIDDING PURPOSES

IRON0014-005 07/01/2013

ADAMS, ASOTIN, BENTON, COLUMBIA, DOUGLAS, FERRY, FRANKLIN, GARFIELD, GRANT, LINCOLN, OKANOGAN, PEND ORIELLE, SPOKANE, STEVENS, WALLA WALLA AND WHITMAN COUNTIES

	Rates	Fringes
IRONWORKER	$ 31.60	21.35

IRON0029-002 07/01/2013

CLARK, COWLITZ, KLICKITAT, PACIFIC, SKAMANIA, AND WAHKAIKUM COUNTIES

	Rates	Fringes
IRONWORKER	$ 34.12	21.35

IRON0086-002 07/01/2013

YAKIMA, KITTITAS AND CHELAN COUNTIES

	Rates	Fringes
IRONWORKER	$ 31.60	21.35

IRON0086-004 07/01/2013

CLALLAM, GRAYS HARBOR, ISLAND, JEFFERSON, KING, KITSAP, LEWIS, MASON, PIERCE, SKAGIT, SNOHOMISH, THURSTON, AND WHATCOM COUNTIES

	Rates	Fringes
IRONWORKER	$ 38.14	21.35

INFORMATIONAL COPY ONLY, NOT FOR BIDDING PURPOSES

LABO0001-002 06/01/2014

ZONE 1:

	Rates	Fringes
Laborers:		
CALLAM, GRAYS HARBOR, ISLAND, JEFFERSON, KING, KITSAP, LEWIS, MASON, PACIFIC (NORTH OF STRAIGHT LINE MADE BY EXTENDING THE NORTH BOUNDARY WAHKIAKUM COUNTY WEST TO THE PACIFIC OCEAN), PIERCE, SAN JUAN,SKAGIT, SNOHOMISH,THURSTON AND WHATCOM COUNTIES		
GROUP 1	$ 22.49	10.30
GROUP 2	$ 25.79	10.30
GROUP 3	$ 32.29	10.30
GROUP 4	$ 33.08	10.30
GROUP 5	$ 33.62	10.30
CHELAN, DOUGLAS (WEST OF THE 120TH MERIDIAN), KITTITAS AND YAKIMA COUNTIES		
GROUP 1	$ 18.95	10.30
GROUP 2	$ 21.76	10.30
GROUP 3	$ 23.85	10.30
GROUP 4	$ 24.43	10.30
GROUP 5	$ 24.85	10.30

BASE POINTS: BELLINGHAM, MT. VERNON, EVERETT, SEATTLE, KENT, TACOMA, OLYMPIA, CENTRALIA, ABERDEEN, SHELTON, PT. TOWNSEND, PT. ANGELES, AND BREMERTON

ZONE 1 - Projects within 25 radius miles of the respective city hall
ZONE 2 - More than 25 but less than 45 radius miles from the respective city hall
ZONE 3 - More than 45 radius miles from the respective city hall

ZONE DIFFERENTIAL (ADD TO ZONE 1 RATES):
ZONE 2 - $1.00
ZONE 3 - $1.30

BASE POINTS: CHELAN, SUNNYSIDE, WENATCHEE, AND YAKIMA

ZONE 1 - Projects within 25 radius miles of the respective city hall
ZONE 2 - More than 25 radius miles from the respective city hall

ZONE DIFFERENTIAL (ADD TO ZONE 1 RATES):
ZONE 2 - $2.25

INFORMATIONAL COPY ONLY, NOT FOR BIDDING PURPOSES

LABORERS CLASSIFICATIONS

GROUP 1: Landscaping and Planting; Watchman; Window Washer/Cleaner (detail clean-up, such as but not limited to cleaning floors, ceilings, walls, windows, etc., prior to final acceptance by the owner)

GROUP 2: Batch Weighman; Crusher Feeder; Fence Laborer; Flagman; Pilot Car

GROUP 3: General Laborer; Air, Gas, or Electric Vibrating Screed; Asbestos Abatement Laborer; Ballast Regulator Machine; Brush Cutter; Brush Hog Feeder; Burner; Carpenter Tender; Cement Finisher Tender; Change House or Dry Shack; Chipping Gun (under 30 lbs.); Choker Setter; Chuck Tender; Clean-up Laborer; Concrete Form Stripper; Curing Laborer; Demolition (wrecking and moving including charred material); Ditch Digger; Dump Person; Fine Graders; Firewatch; Form Setter; Gabian Basket Builders; Grout Machine Tender; Grinders; Guardrail Erector; Hazardous Waste Worker (Level C: uses a chemical "splash suit" and air purifying respirator); Maintenance Person; Material Yard Person; Pot Tender; Rip Rap Person; Riggers; Scale Person; Sloper Sprayer; Signal Person; Stock Piler; Stake Hopper; Toolroom Man (at job site); Topper-Tailer; Track Laborer; Truck Spotter; Vinyl Seamer

GROUP 4: Cement Dumper-Paving; Chipping Gun (over 30 lbs.); Clary Power Spreader; Concrete Dumper/Chute Operator; Concrete Saw Operator; Drill Operator (hydraulic, diamond, aiartrac); Faller and Bucker Chain Saw; Grade Checker and Transit Person; Groutmen (pressure) including post tension beams; Hazardous Waste Worker (Level B: uses same respirator protection as Level A. A supplied air line is provided in conjunction with a chemical "splash suit"); High Scaler; Jackhammer; Laserbeam Operator; Manhole Builder-Mudman; Nozzleman (concrete pump, green cutter when using combination of high pressure air and water on concrete and rock, sandblast, gunite, shotcrete, water blaster, vacuum blaster); Pavement Breaker; Pipe Layer and Caulker; Pipe Pot Tender; Pipe Reliner (not insert type); Pipe Wrapper; Power Jacks; Railroad Spike Puller-Power; Raker-Asphalt; Rivet Buster; Rodder; Sloper (over 20 ft); Spreader (concrete); Tamper and Similar electric, air and glas operated tool; Timber Person-sewer (lagger shorer and cribber); Track Liner Power; Tugger Operator; Vibrator; Well Point Laborer

GROUP 5: Caisson Worker; Miner; Mortarman and Hodcarrier; Powderman; Re-Timberman; Hazardous Waste Worker (Level A: utilizes a fully encapsulated suit with a self-contained breathing apparatus or a supplied air line).

INFORMATIONAL COPY ONLY, NOT FOR BIDDING PURPOSES

LABO0238-004 06/01/2014

PASCO AREA: ADAMS, BENTON, COLUMBIA,DOUGLAS (East of 120th Meridian), FERRY, FRANKLIN, GRANT, OKANOGAN, WALLA WALLA

SPOKANE AREA: ASOTIN, GARFIELD, LINCOLN, PEND OREILLE, SPOKANE, STEVENS & WHITMAN COUNTIES

	Rates	Fringes
LABORER (PASCO)		
GROUP 1	$ 22.25	10.95
GROUP 2	$ 24.35	10.95
GROUP 3	$ 24.62	10.95
GROUP 4	$ 24.89	10.95
GROUP 5	$ 25.17	10.95
LABORER (SPOKANE)		
GROUP 1	$ 21.95	10.95
GROUP 2	$ 24.05	10.95
GROUP 3	$ 24.32	10.95
GROUP 4	$ 24.59	10.95
GROUP 5	$ 24.87	10.95

Zone Differential (Add to Zone 1 rate): $2.00

BASE POINTS: Spokane, Pasco, Lewiston

Zone 1: 0-45 radius miles from the main post office.
Zone 2: 45 radius miles and over from the main post office.

INFORMATIONAL COPY ONLY, NOT FOR BIDDING PURPOSES

LABORERS CLASSIFICATIONS

GROUP 1: Flagman; Landscape Laborer; Scaleman; Traffic Control Maintenance Laborer (to include erection and maintenance of barricades, signs and relief of flagperson); Window Washer/Cleaner (detail cleanup, such as, but not limited to cleaning floors, ceilings, walls, windows, etc. prior to final acceptance by the owner)

GROUP 2: Asbestos Abatement Worker; Brush Hog Feeder; Carpenter Tender; Cement Handler; Clean-up Laborer; Concrete Crewman (to include stripping of forms, hand operating jacks on slip form construction, application of concrete curing compounds, pumpcrete machine, signaling, handling the nozzle of squeezcrete or similar machine,6 inches and smaller); Confined Space Attendant; Concrete Signalman; Crusher Feeder; Demolition (to include clean-up, burning, loading, wrecking and salvage of all material); Dumpman; Fence Erector; Firewatch; Form Cleaning Machine Feeder, Stacker; General Laborer; Grout Machine Header Tender; Guard Rail (to include guard rails, guide and reference posts, sign posts, and right-of-way markers); Hazardous Waste Worker, Level D (no respirator is used and skin protection is minimal); Miner, Class "A" (to include all bull gang, concrete crewman, dumpman and pumpcrete crewman, including distributing pipe, assembly & dismantle, and nipper); Nipper; Riprap Man; Sandblast Tailhoseman; Scaffold Erector (wood or steel); Stake Jumper; Structural Mover (to include separating foundation, preparation, cribbing, shoring, jacking and unloading of structures); Tailhoseman (water nozzle); Timber Bucker and Faller (by hand); Track Laborer (RR); Truck Loader; Well-Point Man; All Other Work Classifications Not Specially Listed Shall Be Classified As General Laborer

GROUP 3: Asphalt Roller, walking; Cement Finisher Tender; Concrete Saw, walking; Demolition Torch; Dope Pot Firemen, non-mechanical; Driller Tender (when required to move and position machine); Form Setter, Paving; Grade Checker using level; Hazardous Waste Worker, Level C (uses a chemical "splash suit" and air purifying respirator); Jackhammer Operator; Miner, Class "B" (to include brakeman, finisher, vibrator, form setter); Nozzleman (to include squeeze and flo-crete nozzle); Nozzleman, water, air or steam; Pavement Breaker (under 90 lbs.); Pipelayer, corrugated metal culvert; Pipelayer, multi- plate; Pot Tender; Power Buggy Operator; Power Tool Operator, gas, electric, pneumatic; Railroad Equipment, power driven, except dual mobile power spiker or puller; Railroad Power Spiker or Puller, dual mobile; Rodder and Spreader; Tamper (to include operation of Barco, Essex and similar tampers); Trencher, Shawnee; Tugger Operator; Wagon Drills; Water Pipe Liner; Wheelbarrow (power driven)

INFORMATIONAL COPY ONLY, NOT FOR BIDDING PURPOSES

GROUP 4: Air and Hydraulic Track Drill; Aspahlt Raker;Brush Machine (to include horizontal construction joint cleanup brush machine, power propelled); Caisson Worker, free air; Chain Saw Operator and Faller; Concrete Stack (to include laborers when laborers working on free standing concrete stacks for smoke or fume control above 40 feet high); Gunite (to include operation of machine and nozzle); Hazardous Waste Worker, Level B (uses same respirator protection as Level A. A supplied air line is provided in conjunction with a chemical "splash suit"); High Scaler; Laser Beam Operator (to include grade checker and elevation control); Miner, Class C (to include miner, nozzleman for concrete, laser beam operator and rigger on tunnels); Monitor Operator (air track or similar mounting); Mortar Mixer; Nozzleman (to include jet blasting nozzleman, over 1,200 lbs., jet blast machine power propelled, sandblast nozzle); Pavement Breaker (90 lbs. and over); Pipelayer (to include working topman, caulker, collarman, jointer, mortarman, rigger, jacker, shorer, valve or meter installer); Pipewrapper; Plasterer Tender; Vibrators (all)

GROUP 5 - Drills with Dual Masts; Hazardous Waste Worker, Level A (utilizes a fully encapsulated suit with a self-contained breathing apparatus or a supplied air line); Miner Class "D", (to include raise and shaft miner, laser beam operator on riases and shafts)

LABO0238-006 06/01/2014

COUNTIES EAST OF THE 120TH MERIDIAN: ADAMS, ASOTIN, BENTON, CHELAN, COLUMBIA, DOUGLAS, FERRY, FRANKLIN, GARFIELD, GRANT, LINCOLN, OKANOGAN, PEND OREILLE, STEVENS, SPOKANE, WALLA WALLA, WHITMAN

	Rates	Fringes
Hod Carrier	$ 24.32	10.95

LABO0335-001 06/01/2013

CLARK, COWLITZ, KLICKITAT, PACIFIC (SOUTH OF A STRAIGHT LINE MADE BY EXTENDING THE NORTH BOUNDARY LINE OF WAHKIAKUM COUNTY WEST TO THE PACIFIC OCEAN), SKAMANIA AND WAHKIAKUM COUNTIES

	Rates	Fringes
Laborers:		
ZONE 1:		
GROUP 1	$ 28.65	10.05
GROUP 2	$ 29.25	10.05
GROUP 3	$ 29.69	10.05
GROUP 4	$ 30.07	10.05
GROUP 5	$ 26.15	10.05
GROUP 6	$ 23.73	10.05
GROUP 7	$ 20.53	10.05

INFORMATIONAL COPY ONLY, NOT FOR BIDDING PURPOSES

Zone Differential (Add to Zone 1 rates):
Zone 2 $ 0.65
Zone 3 - 1.15
Zone 4 - 1.70
Zone 5 - 2.75

BASE POINTS: GOLDENDALE, LONGVIEW, AND VANCOUVER

ZONE 1: Projects within 30 miles of the respective city all.
ZONE 2: More than 30 miles but less than 40 miles from the respective city hall.
ZONE 3: More than 40 miles but less than 50 miles from the respective city hall.
ZONE 4: More than 50 miles but less than 80 miles from the respective city hall.
ZONE 5: More than 80 miles from the respective city hall.

LABORERS CLASSIFICATIONS

GROUP 1: Asphalt Plant Laborers; Asphalt Spreaders; Batch Weighman; Broomers; Brush Burners and Cutters; Car and Truck Loaders; Carpenter Tender; Change-House Man or Dry Shack Man; Choker Setter; Clean-up Laborers; Curing, Concrete; Demolition, Wrecking and Moving Laborers; Dumpers, road oiling crew; Dumpmen (for grading crew); Elevator Feeders; Median Rail Reference Post, Guide Post, Right of Way Marker; Fine Graders; Fire Watch; Form Strippers (not swinging stages); General Laborers; Hazardous Waste Worker; Leverman or Aggregate Spreader (Flaherty and similar types); Loading Spotters; Material Yard Man (including electrical); Pittsburgh Chipper Operator or Similar Types; Railroad Track Laborers; Ribbon Setters (including steel forms); Rip Rap Man (hand placed); Road Pump Tender; Sewer Labor; Signalman; Skipman; Slopers; Spraymen; Stake Chaser; Stockpiler; Tie Back Shoring; Timber Faller and Bucker (hand labor); Toolroom Man (at job site); Tunnel Bullgang (above ground); Weight-Man- Crusher (aggregate when used)

GROUP 2: Applicator (including pot power tender for same), applying protective material by hand or nozzle on utility lines or storage tanks on project; Brush Cutters (power saw); Burners; Choker Splicer; Clary Power Spreader and similar types; Clean- up Nozzleman-Green Cutter (concrete, rock, etc.); Concrete Power Buggyman; Concrete Laborer; Crusher Feeder; Demolition and Wrecking Charred Materials; Gunite Nozzleman Tender; Gunite or Sand Blasting Pot Tender; Handlers or Mixers of all Materials of an irritating nature (including cement and lime); Tool Operators (includes but not limited to: Dry Pack Machine; Jackhammer; Chipping Guns; Paving Breakers); Pipe Doping and Wrapping; Post Hole Digger, air, gas or electric; Vibrating Screed; Tampers; Sand Blasting (Wet); Stake-Setter; Tunnel-Muckers, Brakemen, Concrete Crew, Bullgang (underground)

INFORMATIONAL COPY ONLY, NOT FOR BIDDING PURPOSES

GROUP 3: Asbestos Removal; Bit Grinder; Drill Doctor; Drill Operators, air tracks, cat drills, wagon drills, rubber-mounted drills, and other similar types including at crusher plants; Gunite Nozzleman; High Scalers, Strippers and Drillers (covers work in swinging stages, chairs or belts, under extreme conditions unusual to normal drilling, blasting, barring-down, or sloping and stripping); Manhole Builder; Powdermen; Concrete Saw Operator; Pwdermen; Power Saw Operators (Bucking and Falling); Pumpcrete Nozzlemen; Sand Blasting (Dry); Sewer Timberman; Track Liners, Anchor Machines, Ballast Regulators, Multiple Tampers, Power Jacks, Tugger Operator; Tunnel-Chuck Tenders, Nippers and Timbermen; Vibrator; Water Blaster

GROUP 4: Asphalt Raker; Concrete Saw Operator (walls); Concrete Nozzelman; Grade Checker; Pipelayer; Laser Beam (pipelaying)-applicable when employee assigned to move, set up, align; Laser Beam; Tunnel Miners; Motorman-Dinky Locomotive-Tunnel; Powderman-Tunnel; Shield Operator-Tunnel

GROUP 5: Traffic Flaggers

GROUP 6: Fence Builders

GROUP 7: Landscaping or Planting Laborers

LABO0335-019 09/01/2013

	Rates	Fringes
Hod Carrier	$ 30.47	10.05

PAIN0005-002 07/01/2014

STATEWIDE EXCEPT CLARK, COWLITZ, KLICKITAT, PACIFIC (SOUTH), SKAMANIA, AND WAHKIAKUM COUNTIES

	Rates	Fringes
Painters:		
STRIPERS	$ 28.50	14.61

PAIN0005-004 03/01/2009

CLALLAM, GRAYS HARBOR, ISLAND, JEFFERSON, KING, KITSAP, LEWIS, MASON, PIERCE, SAN JUAN, SKAGIT, SNOHOMISH, THURSTON AND WHATCOM COUNTIES

	Rates	Fringes
PAINTER	$ 20.82	7.44

INFORMATIONAL COPY ONLY, NOT FOR BIDDING PURPOSES

PAIN0005-006 07/01/2014

ADAMS, ASOTIN; BENTON AND FRANKLIN (EXCEPT HANFORD SITE); CHELAN, COLUMBIA, DOUGLAS, FERRY, GARFIELD, GRANT, KITTITAS, LINCOLN, OKANOGAN, PEND OREILLE, SPOKANE, STEVENS, WALLA WALLA, WHITMAN AND YAKIMA COUNTIES

	Rates	Fringes
PAINTER		
Application of Cold Tar Products, Epoxies, Polyurethanes, Acids, Radiation Resistant Material, Water and Sandblasting	$ 26.65	10.48
Over 30'/Swing Stage Work	$ 22.20	7.98
Brush, Roller, Striping, Steam-cleaning and Spray	$ 21.55	10.48
Lead Abatement, Asbestos Abatement	$ 21.50	7.98

*$.70 shall be paid over and above the basic wage rates listed for work on swing stages and high work of over 30 feet.

PAIN0055-003 10/01/2014

CLARK, COWLITZ, KLICKITAT, PACIFIC, SKAMANIA, AND WAHKIAKUM COUNTIES

	Rates	Fringes
Painters:		
Brush & Roller	$ 20.77	9.70
High work - All work 60 ft. or higher	$ 21.52	9.70
Spray and Sandblasting	$ 20.77	9.70

PAIN0055-006 11/01/2014

CLARK, COWLITZ, KLICKITAT, SKAMANIA and WAHKIAKUM COUNTIES

	Rates	Fringes
Painters:		
HIGHWAY & PARKING LOT STRIPER	$ 33.43	11.08

INFORMATIONAL COPY ONLY, NOT FOR BIDDING PURPOSES

PLAS0072-004 06/01/2014

ADAMS, ASOTIN, BENTON, CHELAN, COLUMBIA, DOUGLAS, FERRY, FRANKLIN, GARFIELD, GRANT, KITTITAS, LINCOLN, OKANOGAN, PEND OREILLE, SPOKANE, STEVENS, WALLA WALLA, WHITMAN, AND YAKIMA COUNTIES

	Rates	Fringes
CEMENT MASON/CONCRETE FINISHER		
ZONE 1	$ 26.41	12.44

Zone Differential (Add to Zone 1 rate): Zone 2 - $2.00

BASE POINTS: Spokane, Pasco, Lewiston; Wenatchee
Zone 1: 0 - 45 radius miles from the main post office
Zone 2: Over 45 radius miles from the main post office

PLAS0528-001 06/01/2014

CLALLAM, COWLITZ, GRAYS HARBOR, ISLAND, JEFFERSON, KING, KITSAP, LEWIS, MASON, PACIFIC, PIERCE, SAN JUAN, SKAGIT, SNOHOMISH, THURSTON, WAHKIAKUM AND WHATCOM COUNTIES

	Rates	Fringes
Cement Masons:		
CEMENT MASON	$ 37.43	14.95
COMPOSITION, TROWEL MACHINE, GRINDER, POWER TOOLS, GUNNITE NOZZLE	$ 37.43	14.95
TROWLING MACHINE OPERATOR ON COMPOSITION	$ 37.93	14.95

PLAS0555-002 06/01/2014

CLARK, KLICKITAT AND SKAMANIA COUNTIES

ZONE 1:

	Rates	Fringes
Cement Masons:		
CEMENT MASONS DOING BOTH COMPOSITION/POWER MACHINERY AND SUSPENDED/HANGING SCAFFOLD	$ 30.58	17.76
CEMENT MASONS ON SUSPENDED, SWINGING AND/OR HANGING SCAFFOLD	$ 30.58	17.76
CEMENT MASONS	$ 29.98	17.76
COMPOSITION WORKERS AND POWER MACHINERY OPERATORS	$ 31.18	17.76

INFORMATIONAL COPY ONLY, NOT FOR BIDDING PURPOSES

Zone Differential (Add To Zone 1 Rates):
Zone 2 - $0.65
Zone 3 - 1.15
Zone 4 - 1.70
Zone 5 - 3.00

BASE POINTS: BEND, CORVALLIS, EUGENE, MEDFORD, PORTLAND, SALEM, THE DALLES, VANCOUVER

ZONE 1: Projects within 30 miles of the respective city hall
ZONE 2: More than 30 miles but less than 40 miles from the respective city hall.
ZONE 3: More than 40 miles but less than 50 miles from the respective city hall.
ZONE 4: More than 50 miles but less than 80 miles from the respective city hall.
ZONE 5: More than 80 miles from the respective city hall

TEAM0037-002 06/01/2014

CLARK, COWLITZ, KLICKITAT, PACIFIC (South of a straight line made by extending the north boundary line of Wahkiakum County west to the Pacific Ocean), SKAMANIA, AND WAHKIAKUM COUNTIES

	Rates	Fringes
Truck drivers:		
ZONE 1		
GROUP 1	$ 26.90	14.37
GROUP 2	$ 27.02	14.37
GROUP 3	$ 27.15	14.37
GROUP 4	$ 27.41	14.37
GROUP 5	$ 27.63	14.37
GROUP 6	$ 27.79	14.37
GROUP 7	$ 27.99	14.37

Zone Differential (Add to Zone 1 Rates):
Zone 2 - $0.65
Zone 3 - 1.15
Zone 4 - 1.70
Zone 5 - 2.75

BASE POINTS: ASTORIA, THE DALLES, LONGVIEW AND VANCOUVER

ZONE 1: Projects within 30 miles of the respective city hall.
ZONE 2: More than 30 miles but less than 40 miles from the respective city hall.
ZONE 3: More than 40 miles but less than 50 miles from the respective city hall.
ZONE 4: More than 50 miles but less than 80 miles from the respective city hall.
ZONE 5: More than 80 miles from the respective city hall.

INFORMATIONAL COPY ONLY, NOT FOR BIDDING PURPOSES

TRUCK DRIVERS CLASSIFICATIONS

GROUP 1: A Frame or Hydra lifrt truck w/load bearing surface; Articulated Dump Truck; Battery Rebuilders; Bus or Manhaul Driver; Concrete Buggies (power operated); Concrete Pump Truck; Dump Trucks, side, end and bottom dumps, including Semi Trucks and Trains or combinations there of: up to and including 10 cu. yds.; Lift Jitneys, Fork Lifts (all sizes in loading, unloading and transporting material on job site); Loader and/or Leverman on Concrete Dry Batch Plant (manually operated); Pilot Car; Pickup Truck; Solo Flat Bed and misc. Body Trucks, 0-10 tons; Truck Tender; Truck Mechanic Tender; Water Wagons (rated capacity) up to 3,000 gallons; Transit Mix and Wet or Dry Mix - 5 cu. yds. and under; Lubrication Man, Fuel Truck Driver, Tireman, Wash Rack, Steam Cleaner or combinations; Team Driver; Slurry Truck Driver or Leverman; Tireman

GROUP 2: Boom Truck/Hydra-lift or Retracting Crane; Challenger; Dumpsters or similar equipment all sizes; Dump Trucks/Articulated Dumps 6 cu to 10 cu.; Flaherty Spreader Driver or Leverman; Lowbed Equipment, Flat Bed Semi-trailer or doubles transporting equipment or wet or dry materials; Lumber Carrier, Driver-Straddle Carrier (used in loading, unloading and transporting of materials on job site); Oil Distributor Driver or Leverman; Transit mix and wet or dry mix trcuks: over 5 cu. yds. and including 7 cu. yds.; Vacuum Trucks; Water truck/Wagons (rated capacity) over 3,000 to 5,000 gallons

GROUP 3: Ammonia Nitrate Distributor Driver; Dump trucks, side, end and bottom dumps, including Semi Trucks and Trains or combinations thereof: over 10 cu. yds. and including 30 cu. yds. includes Articulated Dump Trucks; Self-Propelled Street Sweeper; Transit mix and wet or dry mix truck: over 7 cu yds. and including 11 cu yds.; Truck Mechanic-Welder-Body Repairman; Utility and Clean-up Truck; Water Wagons (rated capacity) over 5,000 to 10,000 gallons

GROUP 4: Asphalt Burner; Dump Trucks, side, end and bottom cumps, including Semi-Trucks and Trains or combinations thereof: over 30 cu. yds. and including 50 cu. yds. includes Articulated Dump Trucks; Fire Guard; Transit Mix and Wet or Dry Mix Trucks, over 11 cu. yds. and including 15 cu. yds.; Water Wagon (rated capacity) over 10,000 gallons to 15,000 gallons

GROUP 5: Composite Crewman; Dump Trucks, side, end and bottom dumps, including Semi Trucks and Trains or combinations thereof: over 50 cu. yds. and including 60 cu. yds. includes Articulated Dump Trucks

GROUP 6: Bulk Cement Spreader w/o Auger; Dry Pre-Batch concrete Mix Trucks; Dump trucks, side, end and bottom dumps, including Semi Trucks and Trains of combinations thereof: over 60 cu. yds. and including 80 cu. yds., and includes Articulated Dump Trucks; Skid Truck

INFORMATIONAL COPY ONLY, NOT FOR BIDDING PURPOSES

GROUP 7: Dump Trucks, side, end and bottom dumps, including Semi Trucks and Trains or combinations thereof: over 80 cu. yds. and including 100 cu. yds., includes Articulated Dump Trucks; Industrial Lift Truck (mechanical tailgate)

---

* TEAM0174-001 01/01/2014

CLALLAM, GRAYS HARBOR, ISLAND, JEFFERSON, KING, KITSAP, LEWIS, MASON, PACIFIC (North of a straight line made by extending the north boundary line of Wahkiakum County west to the Pacific Ocean), PIERCE, SAN JUAN, SKAGIT, SNOHOMISH, THURSTON AND WHATCOM COUNTIES

	Rates	Fringes
Truck drivers:		
ZONE A:		
GROUP 1:	$ 32.18	16.69
GROUP 2:	$ 31.34	16.69
GROUP 3:	$ 28.53	16.69
GROUP 4:	$ 23.56	16.69
GROUP 5:	$ 31.73	16.69

ZONE B (25-45 miles from center of listed cities*): Add $.70 per hour to Zone A rates.
ZONE C (over 45 miles from centr of listed cities*): Add $1.00 per hour to Zone A rates.

*Zone pay will be calculated from the city center of the following listed cities:

BELLINGHAM	CENTRALIA	RAYMOND	OLYMPIA
EVERETT	SHELTON	ANACORTES	BELLEVUE
SEATTLE	PORT ANGELES	MT. VERNON	KENT
TACOMA	PORT TOWNSEND	ABERDEEN	BREMERTON

TRUCK DRIVERS CLASSIFICATIONS

GROUP 1 - "A-frame or Hydralift" trucks and Boom trucks or similar equipment when "A" frame or "Hydralift" and Boom truck or similar equipment is used; Buggymobile; Bulk Cement Tanker; Dumpsters and similar equipment, Tournorockers, Tournowagon, Tournotrailer, Cat DW series, Terra Cobra, Le Tourneau, Westinghouse, Athye Wagon, Euclid Two and Four-Wheeled power tractor with trailer and similar top-loaded equipment transporting material: Dump Trucks, side, end and bottom dump, including semi-trucks and trains or combinations thereof with 16 yards to 30 yards capacity: Over 30 yards $.15 per hour additional for each 10 yard increment; Explosive Truck (field mix) and similar equipment; Hyster Operators (handling bulk loose aggregates); Lowbed and Heavy Duty Trailer; Road Oil Distributor Driver; Spreader, Flaherty Transit mix used exclusively in heavy construction; Water Wagon and Tank Truck-3,000 gallons and over capacity

INFORMATIONAL COPY ONLY, NOT FOR BIDDING PURPOSES

GROUP 2 - Bulllifts, or similar equipment used in loading or unloading trucks, transporting materials on job site; Dumpsters, and similar equipment, Tournorockers, Tournowagon, Turnotrailer, Cat. D.W. Series, Terra Cobra, Le Tourneau, Westinghouse, Athye wagon, Euclid two and four-wheeled power tractor with trailer and similar top-loaded equipment transporting material: Dump trucks, side, end and bottom dump, including semi-trucks and trains or combinations thereof with less than 16 yards capacity; Flatbed (Dual Rear Axle); Grease Truck, Fuel Truck, Greaser, Battery Service Man and/or Tire Service Man; Leverman and loader at bunkers and batch plants; Oil tank transport; Scissor truck; Slurry Truck; Sno-Go and similar equipment; Swampers; Straddler Carrier (Ross, Hyster) and similar equipment; Team Driver; Tractor (small, rubber-tired)(when used within Teamster jurisdiction); Vacuum truck; Water Wagon and Tank trucks-less than 3,000 gallons capacity; Winch Truck; Wrecker, Tow truck and similar equipment

GROUP 3 - Flatbed (single rear axle); Pickup Sweeper; Pickup Truck. (Adjust Group 3 upward by $2.00 per hour for onsite work only)

GROUP 4 - Escort or Pilot Car

GROUP 5 - Mechanic

HAZMAT PROJECTS

Anyone working on a HAZMAT job, where HAZMAT certification is required, shall be compensated as a premium, in addition to the classification working in as follows:
LEVEL C: +$.25 per hour - This level uses an air purifying respirator or additional protective clothing.
LEVEL B: +$.50 per hour - Uses same respirator protection as Level A. Supplied air line is provided in conjunction with a chemical "splash suit."
LEVEL A: +$.75 per hour - This level utilizes a fully-encapsulated suit with a self-contained breathing apparatus or a supplied air line.

INFORMATIONAL COPY ONLY, NOT FOR BIDDING PURPOSES

TEAM0690-004 01/01/2014

ADAMS, ASOTIN, BENTON, CHELAN, COLUMBIA, DOUGLAS, FERRY, FRANKLIN, GARFIELD, GRANT KITTITAS, LINCOLN, OKANOGAN, PEND OREILLE, SPOKANE, STEVENS, WALLA WALLA, WHITMAN AND YAKIMA COUNTIES

	Rates	Fringes
Truck drivers: (AREA 1: SPOKANE ZONE CENTER: Adams,Chelan, Douglas, Ferry, Grant, Kittitas, Lincoln, Okanogan, Pen Oreille, Spokane, Stevens, and Whitman Counties		
AREA 1: LEWISTON ZONE CENTER: Asotin, Columbia, and Garfield Counties		
AREA 2: PASCO ZONE CENTER: Benton, Franklin, Walla Walla and Yakima Counties)		
AREA 1:		
GROUP 1	$ 20.17	15.19
GROUP 2	$ 22.44	15.19
GROUP 3	$ 22.94	15.19
GROUP 4	$ 23.27	15.19
GROUP 5	$ 23.38	15.19
GROUP 6	$ 23.55	15.19
GROUP 7	$ 24.08	15.19
GROUP 8	$ 24.44	15.19
AREA 2		
GROUP 1	$ 21.77	15.19
GROUP 2	$ 24.31	15.19
GROUP 3	$ 24.42	15.19
GROUP 4	$ 24.75	15.19
GROUP 5	$ 24.86	15.19
GROUP 6	$ 25.02	15.19
GROUP 7	$ 25.56	15.19
GROUP 8	$ 25.88	15.19

Zone Differential (Add to Zone 1 rate: Zone 2 + $2.00)

BASE POINTS: Spokane, Pasco, Lewiston
Zone 1: 0-45 radius miles from the main post office.
Zone 2: Outside 45 radius miles from the main post office

TRUCK DRIVERS CLASSIFICATIONS

GROUP 1: Escort Driver or Pilot Car; Employee Haul; Power Boat Hauling Employees or Material

GROUP 2: Fish Truck; Flat Bed Truck; Fork Lift (3000 lbs. and under); Leverperson (loading trucks at bunkers); Trailer Mounted Hydro Seeder and Mulcher; Seeder & Mulcher; Stationary Fuel Operator; Tractor (small, rubber-tired, pulling trailer or similar equipment)

INFORMATIONAL COPY ONLY, NOT FOR BIDDING PURPOSES

GROUP 3: Auto Crane (2000 lbs. capacity); Buggy Mobile & Similar; Bulk Cement Tanks & Spreader; Dumptor (6 yds. & under); Flat Bed Truck with Hydraullic System; Fork Lift (3001-16,000 lbs.); Fuel Truck Driver, Steamcleaner & Washer; Power Operated Sweeper; Rubber-tired Tunnel Jumbo; Scissors Truck; Slurry Truck Driver; Straddle Carrier (Ross, Hyster, & similar); Tireperson; Transit Mixers & Truck Hauling Concrete (3 yd. to & including 6 yds.); Trucks, side, end, bottom & articulated end dump (3 yards to and including 6 yds.); Warehouseperson (to include shipping & receiving); Wrecker & Tow Truck

GROUP 4: A-Frame; Burner, Cutter, & Welder; Service Greaser; Trucks, side, end, bottom & articulated end dump (over 6 yards to and including 12 yds.); Truck Mounted Hydro Seeder; Warehouseperson; Water Tank truck (0-8,000 gallons)

GROUP 5: Dumptor (over 6 yds.); Lowboy (50 tons & under); Self- loading Roll Off; Semi-Truck & Trailer; Tractor with Steer Trailer; Transit Mixers and Trucks Hauling Concrete (over 6 yds. to and including 10 yds.); Trucks, side, end, bottom and end dump (over 12 yds. to & including 20 yds.); Truck-Mounted Crane (with load bearing surface either mounted or pulled, up to 14 ton); Vacuum Truck (super sucker, guzzler, etc.)

GROUP 6: Flaherty Spreader Box Driver; Flowboys; Fork Lift (over 16,000 lbs.); Dumps (Semi-end); Mechanic (Field); Semi- end Dumps; Transfer Truck & Trailer; Transit Mixers & Trucks Hauling Concrete (over 10 yds. to & including 20 yds.); Trucks, side, end, bottom and articulated end dump (over 20 yds. to & including 40 yds.); Truck and Pup; Tournarocker, DWs & similar with 2 or more 4 wheel-power tractor with trailer, gallonage or yardage scale, whichever is greater Water Tank Truck (8,001- 14,000 gallons); Lowboy(over 50 tons)

GROUP 7: Oil Distributor Driver; Stringer Truck (cable oeprated trailer); Transit Mixers & Trucks Hauling Concrete (over 20 yds.); Truck, side, end, bottom end dump (over 40 yds. to & including 100 yds.); Truck Mounted Crane (with load bearing surface either mounted or pulled (16 through 25 tons);

GROUP 8: Prime Movers and Stinger Truck; Trucks, side, end, bottom and articulated end dump (over 100 yds.); Helicopter Pilot Hauling Employees or Materials

Footnote A - Anyone working on a HAZMAT job, where HAZMAT certification is required, shall be compensated as a premium, in additon to the classification working in as follows:

LEVEL C-D: - $.50 PER HOUR (This is the lowest level of protection. This level may use an air purifying respirator or additional protective clothing.

INFORMATIONAL COPY ONLY, NOT FOR BIDDING PURPOSES

LEVEL A-B: - $1.00 PER HOUR (Uses supplied air is conjunction with a chemical spash suit or fully encapsulated suit with a self-contained breathing apparatus.

Employees shall be paid Hazmat pay in increments of four(4) and eight(8) hours.

NOTE:
Trucks Pulling Equipment Trailers: shall receive $.15/hour over applicable truck rate

---

WELDERS - Receive rate prescribed for craft performing operation to which welding is incidental.

==========

Unlisted classifications needed for work not included within the scope of the classifications listed may be added after award only as provided in the labor standards contract clauses (29CFR 5.5 (a) (1) (ii)).

The body of each wage determination lists the classification and wage rates that have been found to be prevailing for the cited type(s) of construction in the area covered by the wage determination. The classifications are listed in alphabetical order of "identifiers" that indicate whether the particular rate is a union rate (current union negotiated rate for local), a survey rate (weighted average rate) or a union average rate (weighted union average rate).

Union Rate Identifiers

A four letter classification abbreviation identifier enclosed in dotted lines beginning with characters other than "SU" or "UAVG" denotes that the union classification and rate were prevailing for that classification in the survey. Example: PLUM0198-005 07/01/2014. PLUM is an abbreviation identifier of the union which prevailed in the survey for this classification, which in this example would be Plumbers. 0198 indicates the local union number or district council number where applicable, i.e., Plumbers Local 0198. The next number, 005 in the example, is an internal number used in processing the wage determination. 07/01/2014 is the effective date of the most current negotiated rate, which in this example is July 1, 2014.

Union prevailing wage rates are updated to reflect all rate changes in the collective bargaining agreement (CBA) governing this classification and rate.

INFORMATIONAL COPY ONLY, NOT FOR BIDDING PURPOSES

Survey Rate Identifiers

Classifications listed under the "SU" identifier indicate that no one rate prevailed for this classification in the survey and the published rate is derived by computing a weighted average rate based on all the rates reported in the survey for that classification. As this weighted average rate includes all rates reported in the survey, it may include both union and non-union rates. Example: SULA2012-007 5/13/2014. SU indicates the rates are survey rates based on a weighted average calculation of rates and are not majority rates. LA indicates the State of Louisiana. 2012 is the year of survey on which these classifications and rates are based. The next number, 007 in the example, is an internal number used in producing the wage determination. 5/13/2014 indicates the survey completion date for the classifications and rates under that identifier.

Survey wage rates are not updated and remain in effect until a new survey is conducted.

Union Average Rate Identifiers

Classification(s) listed under the UAVG identifier indicate that no single majority rate prevailed for those classifications; however, 100% of the data reported for the classifications was union data. EXAMPLE: UAVG-OH-0010 08/29/2014. UAVG indicates that the rate is a weighted union average rate. OH indicates the state. The next number, 0010 in the example, is an internal number used in producing the wage determination. 08/29/2014 indicates the survey completion date for the classifications and rates under that identifier.

A UAVG rate will be updated once a year, usually in January of each year, to reflect a weighted average of the current negotiated/CBA rate of the union locals from which the rate is based.

INFORMATIONAL COPY ONLY, NOT FOR BIDDING PURPOSES

WAGE DETERMINATION APPEALS PROCESS

1.) Has there been an initial decision in the matter? This can be:

* an existing published wage determination
* a survey underlying a wage determination
* a Wage and Hour Division letter setting forth a position on a wage determination matter
* a conformance (additional classification and rate) ruling

On survey related matters, initial contact, including requests for summaries of surveys, should be with the Wage and Hour Regional Office for the area in which the survey was conducted because those Regional Offices have responsibility for the Davis-Bacon survey program. If the response from this initial contact is not satisfactory, then the process described in 2.) and 3.) should be followed.

With regard to any other matter not yet ripe for the formal process described here, initial contact should be with the Branch of Construction Wage Determinations. Write to:

Branch of Construction Wage Determinations
Wage and Hour Division
U.S. Department of Labor
200 Constitution Avenue, N.W.
Washington, DC 20210

2.) If the answer to the question in 1.) is yes, then an interested party (those affected by the action) can request review and reconsideration from the Wage and Hour Administrator (See 29 CFR Part 1.8 and 29 CFR Part 7). Write to:

Wage and Hour Administrator
U.S. Department of Labor
200 Constitution Avenue, N.W.
Washington, DC 20210

INFORMATIONAL COPY ONLY, NOT FOR BIDDING PURPOSES

The request should be accompanied by a full statement of the interested party's position and by any information (wage payment data, project description, area practice material, etc.) that the requestor considers relevant to the issue.

3.) If the decision of the Administrator is not favorable, an interested party may appeal directly to the Administrative Review Board (formerly the Wage Appeals Board). Write to:

Administrative Review Board
U.S. Department of Labor
200 Constitution Avenue, N.W.
Washington, DC 20210

4.) All decisions by the Administrative Review Board are final.

==========

END OF GENERAL DECISION

INFORMATIONAL COPY ONLY, NOT FOR BIDDING PURPOSES

Washington State Department of Labor and Industries
Policy Statement
(Regarding the Production of "Standard" or "Non-standard" Items)

Below is the department's (State L&I's) list of criteria to be used in determining whether a prefabricated item is "standard" or "non-standard". For items not appearing on WSDOT's predetermined list, these criteria shall be used by the Contractor (and the Contractor's subcontractors, agents to subcontractors, suppliers, manufacturers, and fabricators) to determine coverage under RCW 39.12. The production, in the State of Washington, of non-standard items is covered by RCW 39.12, and the production of standard items is not. The production of any item outside the State of Washington is not covered by RCW 39.12.

1. Is the item fabricated for a public works project? If not, it is not subject to RCW 39.12. If it is, go to question 2.

2. Is the item fabricated on the public works jobsite? If it is, the work is covered under RCW 39.12. If not, go to question 3.

3. Is the item fabricated in an assembly/fabrication plant set up for, and dedicated primarily to, the public works project? If it is, the work is covered by RCW 39.12. If not, go to question 4.

4. Does the item require any assembly, cutting, modification or other fabrication by the supplier? If not, the work is not covered by RCW 39.12. If yes, go to question 5.

5. Is the prefabricated item intended for the public works project typically an inventory item which could reasonably be sold on the general market? If not, the work is covered by RCW 39.12. If yes, go to question 6.

6. Does the specific prefabricated item, generally defined as standard, have any unusual characteristics such as shape, type of material, strength requirements, finish, etc? If yes, the work is covered under RCW 39.12.

Any firm with questions regarding the policy, WSDOT's Predetermined List, or for determinations of covered and non-covered workers shall be directed to State L&I at (360) 902-5330.

INFORMATIONAL COPY ONLY NOT FOR BIDDING PURPOSES

WSDOT's
Predetermined List for
Suppliers - Manufactures - Fabricator

Below is a list of potentially prefabricated items, originally furnished by WSDOT to Washington State Department of Labor and Industries, that may be considered non-standard and therefore covered by the prevailing wage law, RCW 39.12. Items marked with an X in the "YES" column should be considered to be non-standard and therefore covered by RCW 39.12. Items marked with an X in the "NO" column should be considered to be standard and therefore not covered. Of course, exceptions to this general list may occur, and in that case shall be evaluated according to the criteria described in State and L&I's policy statement.

	ITEM DESCRIPTION	YES	NO
1.	Metal rectangular frames, solid metal covers, herringbone grates, and bi-directional vaned grates for Catch Basin Types 1, 1L, 1P, and 2 and Concrete Inlets. See Std. Plans		X
2.	Metal circular frames (rings) and covers, circular grates, and prefabricated ladders for Manhole Types 1, 2, and 3, Drywell Types 1, 2, and 3 and Catch Basin Type 2. See Std. Plans		X
3.	Prefabricated steel grate supports and welded grates, metal frames and dual vaned grates, and Type 1, 2, and 3 structural tubing grates for Drop Inlets. See Std. Plans.		X
4.	Concrete Pipe - Plain Concrete pipe and reinforced concrete pipe Class 2 to 5 sizes smaller than 60 inch diameter.		X
5.	Concrete Pipe - Plain Concrete pipe and reinforced concrete pipe Class 2 to 5 sizes larger than 60 inch diameter.		X
6.	Corrugated Steel Pipe - Steel lock seam corrugated pipe for culverts and storm sewers, sizes 30 inch to 120 inches in diameter. May also be treated, 1 thru 5.		X
7.	Corrugated Aluminum Pipe - Aluminum lock seam corrugated pipe for culverts and storm sewers, sizes 30 inch to 120 inches in diameter. May also be treated, #5.		X

INFORMATIONAL COPY ONLY, NOT FOR BIDDING PURPOSES

	ITEM DESCRIPTION	YES	NO
8.	Anchor Bolts & Nuts - Anchor Bolts and Nuts, for mounting sign structures, luminaries and other items, shall be made from commercial bolt stock. See Contract Plans and Std. Plans for size and material type.		X
9.	Aluminum Pedestrian Handrail - Pedestrian handrail conforming to the type and material specifications set forth in the contract plans. Welding of aluminum shall be in accordance with Section 9-28.14(3).	X	
10.	Major Structural Steel Fabrication - Fabrication of major steel items such as trusses, beams, girders, etc., for bridges.	X	
11.	Minor Structural Steel Fabrication - Fabrication of minor steel Items such as special hangers, brackets, access doors for structures, access ladders for irrigation boxes, bridge expansion joint systems, etc., involving welding, cutting, punching and/or boring of holes. See Contact Plans for item description and shop drawings.	X	
12.	Aluminum Bridge Railing Type BP - Metal bridge railing conforming to the type and material specifications set forth in the Contract Plans. Welding of aluminum shall be in accordance with Section 9-28.14(3).		X
13.	Concrete Piling--Precast-Prestressed concrete piling for use as 55 and 70 ton concrete piling. Concrete to conform to Section 9-19.1 of Std. Spec..	X	
14.	Precast Manhole Types 1, 2, and 3 with cones, adjustment sections and flat top slabs. See Std. Plans.		X
15.	Precast Drywell Types 1, 2, and with cones and adjustment Sections. See Std. Plans.		X
16.	Precast Catch Basin - Catch Basin type 1, 1L, 1P, and 2 With adjustment sections. See Std. Plans.		X

INFORMATIONAL COPY ONLY NOT FOR BIDDING PURPOSES

	ITEM DESCRIPTION	YES	NO
17.	Precast Concrete Inlet - with adjustment sections, See Std. Plans		X
18.	Precast Drop Inlet Type 1 and 2 with metal grate supports. See Std. Plans.		X
19.	Precast Grate Inlet Type 2 with extension and top units. See Std. Plans		X
20.	Metal frames, vaned grates, and hoods for Combination Inlets. See Std. Plans		X
21.	Precast Concrete Utility Vaults - Precast Concrete utility vaults of various sizes. Used for in ground storage of utility facilities and controls. See Contract Plans for size and construction requirements. Shop drawings are to be provided for approval prior to casting		X
22.	Vault Risers - For use with Valve Vaults and Utilities Vaults.		X
23.	Valve Vault - For use with underground utilities. See Contract Plans for details.		X
24.	Precast Concrete Barrier - Precast Concrete Barrier for use as new barrier or may also be used as Temporary Concrete Barrier. Only new state approved barrier may be used as permanent barrier.		X
25.	Reinforced Earth Wall Panels – Reinforced Earth Wall Panels in size and shape as shown in the Plans. Fabrication plant has annual approval for methods and materials to be used. See Shop Drawing. Fabrication at other locations may be approved, after facilities inspection, contact HQ. Lab.	X	
26.	Precast Concrete Walls - Precast Concrete Walls - tilt-up wall panel in size and shape as shown in Plans. Fabrication plant has annual approval for methods and materials to be used	X	

INFORMATIONAL COPY ONLY, NOT FOR BIDDING PURPOSES

	ITEM DESCRIPTION	YES	NO
27.	Precast Railroad Crossings - Concrete Crossing Structure Slabs.	X	
28.	12, 18 and 26 inch Standard Precast Prestressed Girder – Standard Precast Prestressed Girder for use in structures. Fabricator plant has annual approval of methods and materials to be used. Shop Drawing to be provided for approval prior to casting girders. See Std. Spec. Section 6-02.3(25)A	X	
29.	Prestressed Concrete Girder Series 4-14 - Prestressed Concrete Girders for use in structures. Fabricator plant has annual approval of methods and materials to be used. Shop Drawing to be provided for approval prior to casting girders. See Std. Spec. Section 6-02.3(25)A .	X	
30.	Prestressed Tri-Beam Girder - Prestressed Tri-Beam Girders for use in structures. Fabricator plant has annual approval of methods and materials to be used. Shop Drawing to be provided for approval prior to casting girders. See Std. Spec. Section 6-02.3(25)A	X	
31.	Prestressed Precast Hollow-Core Slab – Precast Prestressed Hollow-core slab for use in structures. Fabricator plant has annual approval of methods and materials to be used. Shop Drawing to be provided for approval prior to casting girders. See Std. Spec. Section 6-02.3(25)A.	X	
32.	Prestressed-Bulb Tee Girder - Bulb Tee Prestressed Girder for use in structures. Fabricator plant has annual approval of methods and materials to be used. Shop Drawing to be provided for approval prior to casting girders. See Std. Spec. Section 6-02.3(25)A	X	
33.	Monument Case and Cover See Std. Plan.		X

INFORMATIONAL COPY ONLY, NOT FOR BIDDING PURPOSES

	ITEM DESCRIPTION	YES	NO
34.	Cantilever Sign Structure - Cantilever Sign Structure fabricated from steel tubing meeting AASHTO-M-183. See Std. Plans, and Contract Plans for details. The steel structure shall be galvanized after fabrication in accordance with AASHTO-M-111.	X	
35.	Mono-tube Sign Structures - Mono-tube Sign Bridge fabricated to details shown in the Plans. Shop drawings for approval are required prior to fabrication.	X	
36.	Steel Sign Bridges - Steel Sign Bridges fabricated from steel tubing meeting AASHTO-M-138 for Aluminum Alloys. See Std. Plans, and Contract Plans for details. The steel structure shall be galvanized after fabrication in accordance with AASHTO-M-111.	X	
37.	Steel Sign Post - Fabricated Steel Sign Posts as detailed in Std Plans. Shop drawings for approval are to be provided prior to fabrication		X
38.	Light Standard-Prestressed - Spun, prestressed, hollow concrete poles.	X	
39.	Light Standards - Lighting Standards for use on highway illumination systems, poles to be fabricated to conform with methods and materials as specified on Std. Plans. See Specia Provisions for pre-approved drawings.	X	
40.	Traffic Signal Standards - Traffic Signal Standards for use on highway and/or street signal systems. Standards to be fabricated to conform with methods and material as specified on Std. Plans. See Special Provisions for pre-approved drawings	X	
41.	Precast Concrete Sloped Mountable Curb (Single and DualFaced) See Std. Plans.		X

INFORMATIONAL COPY ONLY, NOT FOR BIDDING PURPOSES

	ITEM DESCRIPTION	YES	NO
42.	Traffic Signs - Prior to approval of a Fabricator of Traffic Signs, the sources of the following materials must be submitted and approved for reflective sheeting, legend material, and aluminum sheeting. **NOTE:** *** Fabrication inspection required. Only signs tagged "Fabrication Approved" by WSDOT Sign Fabrication Inspector to be installed	X	X
		Custom Message	Std Signing Message
43.	Cutting & bending reinforcing steel		X
44.	Guardrail components	X	X
		Custom End Sec	Standard Sec
45.	Aggregates/Concrete mixes	Covered by WAC 296-127-018	
46.	Asphalt	Covered by WAC 296-127-018	
47.	Fiber fabrics		X
48.	Electrical wiring/components		X
49.	treated or untreated timber pile		X
50.	Girder pads (elastomeric bearing)	X	
51.	Standard Dimension lumber		X
52.	Irrigation components		X

INFORMATIONAL COPY ONLY, NOT FOR BIDDING PURPOSES

	ITEM DESCRIPTION	YES	NO
53.	Fencing materials		X
54.	Guide Posts		X
55.	Traffic Buttons		X
56.	Epoxy		X
57.	Cribbing		X
58.	Water distribution materials		X
59.	Steel "H" piles		X
60.	Steel pipe for concrete pile casings		X
61.	Steel pile tips, standard		X
62.	Steel pile tips, custom	X	

Prefabricated items specifically produced for public works projects that are prefabricated in a county other than the county wherein the public works project is to be completed, the wage for the offsite prefabrication shall be the applicable prevailing wage for the county in which the actual prefabrication takes place.

It is the manufacturer of the prefabricated product to verify that the correct county wage rates are applied to work they perform.

See RCW 39.12.010
(The definition of "locality" in RCW 39.12.010(2) contains the phrase "wherein the physical work is being performed." The department interprets this phrase to mean the actual work site.

INFORMATIONAL COPY ONLY, NOT FOR BIDDING PURPOSES

WSDOT's List of State Occupations not applicable to Heavy and Highway Construction Projects

This project is subject to the state hourly minimum rates for wages and fringe benefits in the contract provisions, as provided by the state Department of Labor and Industries.
The following list of occupations, is comprised of those occupations that are not normally used in the construction of heavy and highway projects.
When considering job classifications for use and / or payment when bidding on, or building heavy and highway construction projects for, or administered by WSDOT, these Occupations will be excepted from the included "Washington State Prevailing Wage Rates For Public Work Contracts" documents.

- Building Service Employees
- Electrical Fixture Maintenance Workers
- Electricians - Motor Shop
- Heating Equipment Mechanics
- Industrial Engine and Machine Mechanics
- Industrial Power Vacuum Cleaners
- Inspection, Cleaning, Sealing of Water Systems by Remote Control
- Laborers - Underground Sewer & Water
- Machinists (Hydroelectric Site Work)
- Modular Buildings
- Playground & Park Equipment Installers
- Power Equipment Operators - Underground Sewer & Water
- Residential *** ALL ASSOCIATED RATES ***
- Sign Makers and Installers (Non-Electrical)
- Sign Makers and Installers (Electrical)
- Stage Rigging Mechanics (Non Structural)

The following occupations may be used only as outlined in the preceding text concerning "WSDOT's list for Suppliers - Manufacturers - Fabricators"

- Fabricated Precast Concrete Products
- Metal Fabrication (In Shop)

Definitions for the Scope of Work for prevailing wages may be found at the Washington State Department of Labor and Industries web site and in WAC Chapter 296-127.

INFORMATIONAL COPY ONLY, NOT FOR BIDDING PURPOSES

Washington State Department of Labor and Industries
Policy Statements
(Regarding Production and Delivery of Gravel, Concrete, Asphalt, etc.)

WAC 296-127-018 Agency filings affecting this section

Coverage and exemptions of workers involved in the production and delivery of gravel, concrete, asphalt, or similar materials.

(1) The materials covered under this section include but are not limited to: Sand, gravel, crushed rock, concrete, asphalt, or other similar materials.

(2) All workers, regardless of by whom employed, are subject to the provisions of chapter 39.12 RCW when they perform any or all of the following functions:

(a) They deliver or discharge any of the above-listed materials to a public works project site:

(i) At one or more point(s) directly upon the location where the material will be incorporated into the project; or

(ii) At multiple points at the project; or

(iii) Adjacent to the location and coordinated with the incorporation of those materials.

(b) They wait at or near a public works project site to perform any tasks subject to this section of the rule.

(c) They remove any materials from a public works construction site pursuant to contract requirements or specifications (e.g., excavated materials, materials from demolished structures, clean-up materials, etc.).

(d) They work in a materials production facility (e.g., batch plant, borrow pit, rock quarry, etc.,) which is established for a public works project for the specific, but not necessarily exclusive, purpose of supplying materials for the project.

(e) They deliver concrete to a public works site regardless of the method of incorporation.

(f) They assist or participate in the incorporation of any materials into the public works project.

INFORMATIONAL COPY ONLY, NOT FOR BIDDING PURPOSES

(3) All travel time that relates to the work covered under subsection (2) of this section requires the payment of prevailing wages. Travel time includes time spent waiting to load, loading, transporting, waiting to unload, and delivering materials. Travel time would include all time spent in travel in support of a public works project whether the vehicle is empty or full. For example, travel time spent returning to a supply source to obtain another load of material for use on a public works site or returning to the public works site to obtain another load of excavated material is time spent in travel that is subject to prevailing wage. Travel to a supply source, including travel from a public works site, to obtain materials for use on a private project would not be travel subject to the prevailing wage.

(4) Workers are not subject to the provisions of chapter 39.12 RCW when they deliver materials to a stockpile.

(a) A "stockpile" is defined as materials delivered to a pile located away from the site of incorporation such that the stockpiled materials must be physically moved from the stockpile and transported to another location on the project site in order to be incorporated into the project.

(b) A stockpile does not include any of the functions described in subsection (2)(a) through (f) of this section; nor does a stockpile include materials delivered or distributed to multiple locations upon the project site; nor does a stockpile include materials dumped at the place of incorporation, or adjacent to the location and coordinated with the incorporation.

(5) The applicable prevailing wage rate shall be determined by the locality in which the work is performed. Workers subject to subsection (2)(d) of this section, who produce such materials at an off-site facility shall be paid the applicable prevailing wage rates for the county in which the off-site facility is located. Workers subject to subsection (2) of this section, who deliver such materials to a public works project site shall be paid the applicable prevailing wage rates for the county in which the public works project is located.

[Statutory Authority: Chapter 39.12 RCW, RCW 43.22.051 and 43.22.270. 08-24-101, § 296-127-018, filed 12/2/08, effective 1/2/09. Statutory Authority: Chapters 39.04 and 39.12 RCW and RCW 43.22.270. 92-01-104 and 92-08-101, § 296-127-018, filed 12/18/91 and 4/1/92, effective 8/31/92.]

INFORMATIONAL COPY ONLY - NOT FOR BIDDING PURPOSES

INFORMATIONAL COPY ONLY, NOT FOR BIDDING PURPOSES

****

Overtime Codes

Overtime calculations are based on the hourly rate actually paid to the worker. On public works projects, the hourly rate must be not less than the prevailing rate of wage minus the hourly rate of the cost of fringe benefits actually provided for the worker.

1. ALL HOURS WORKED IN EXCESS OF EIGHT (8) HOURS PER DAY OR FORTY (40) HOURS PER WEEK SHALL BE PAID AT ONE AND ONE-HALF TIMES THE HOURLY RATE OF WAGE.

B. All hours worked on Saturdays shall be paid at one and one-half times the hourly rate of wage. All hours worked on Sundays and holidays shall be paid at double the hourly rate of wage.

C. The first two (2) hours after eight (8) regular hours Monday through Friday and the first ten (10) hours on Saturday shall be paid at one and one-half times the hourly rate of wage. All other overtime hours and all hours worked on Sundays and holidays shall be paid at double the hourly rate of wage.

D. The first two (2) hours before or after a five-eight (8) hour workweek day or a four-ten (10) hour workweek day and the first eight (8) hours worked the next day after either workweek shall be paid at one and one-half times the hourly rate of wage. All additional hours worked and all worked on Sundays and holidays shall be paid at double the hourly rate of wage.

E. The first two (2) hours after eight (8) regular hours Monday through Friday and the first eight (8) hours on Saturday shall be paid at one and one-half times the hourly rate of wage. All other hours worked Monday through Saturday, and all hours worked on Sundays and holidays shall be paid at double the hourly rate of wage.

F. The first two (2) hours after eight (8) regular hours Monday through Friday and the first ten (10) hours on Saturday shall be paid at one and one-half times the hourly rate of wage. All other overtime hours worked, except Labor Day, shall be paid at double the hourly rate of wage. All hours worked on Labor Day shall be paid at three times the hourly rate of wage.

G. The first ten (10) hours worked on Saturdays and the first ten (10) hours worked on a fifth calendar weekday in a four-ten hour schedule, shall be paid at one and one-half times the hourly rate of wage. All hours worked in excess of ten (10) hours per day Monday through Saturday and all hours worked on Sundays and holidays shall be paid at double the hourly rate of wage.

H. All hours worked on Saturdays (except makeup days if work is lost due to inclement weather conditions or equipment breakdown) shall be paid at one and one-half times the hourly rate of wage. All hours worked Monday through Saturday over twelve (12) hours and all hours worked on Sundays and holidays shall be paid at double the hourly rate of wage.

I. All hours worked on Sundays and holidays shall also be paid at double the hourly rate of wage.

J. The first two (2) hours after eight (8) regular hours Monday through Friday and the first ten (10) hours on Saturday shall be paid at one and one-half times the hourly rate of wage. All hours worked over ten (10) hours Monday through Saturday, Sundays and holidays shall be paid at double the hourly rate of wage.

K. All hours worked on Saturdays and Sundays shall be paid at one and one-half times the hourly rate of wage. All hours worked on holidays shall be paid at double the hourly rate of wage.

M. All hours worked on Saturdays (except makeup days if work is lost due to inclement weather conditions) shall be paid at one and one-half times the hourly rate of wage. All hours worked on Sundays and holidays shall be paid at double the hourly rate of wage.

INFORMATIONAL COPY ONLY - NOT FOR BIDDING PURPOSES

1. N. All hours worked on Saturdays (except makeup days) shall be paid at one and one-half times the hourly rate of wage. All hours worked on Sundays and holidays shall be paid at double the hourly rate of wage.

O. The first ten (10) hours worked on Saturday shall be paid at one and one-half times the hourly rate of wage. All hours worked on Sundays, holidays and after twelve (12) hours, Monday through Friday and after ten (10) hours on Saturday shall be paid at double the hourly rate of wage.

P. All hours worked on Saturdays (except makeup days if circumstances warrant) and Sundays shall be paid at one and one-half times the hourly rate of wage. All hours worked on holidays shall be paid at double the hourly rate of wage.

Q. The first two (2) hours after eight (8) regular hours Monday through Friday and up to ten (10) hours worked on Saturdays shall be paid at one and one-half times the hourly rate of wage. All hours worked in excess of ten (10) hours per day Monday through Saturday and all hours worked on Sundays and holidays (except Christmas day) shall be paid at double the hourly rate of wage. All hours worked on Christmas day shall be paid at two and one-half times the hourly rate of wage.

R. All hours worked on Sundays and holidays shall be paid at two times the hourly rate of wage.

S. The first two (2) hours after eight (8) regular hours Monday through Friday and the first eight (8) hours on Saturday shall be paid at one and one-half times the hourly rate of wage. All hours worked on holidays and all other overtime hours worked, except Labor Day, shall be paid at double the hourly rate of wage. All hours worked on Labor Day shall be paid at three times the hourly rate of wage.

U. All hours worked on Saturdays shall be paid at one and one-half times the hourly rate of wage. All hours worked on Sundays and holidays (except Labor Day) shall be paid at two times the hourly rate of wage. All hours worked on Labor Day shall be paid at three times the hourly rate of wage.

V. All hours worked on Sundays and holidays (except Thanksgiving Day and Christmas day) shall be paid at one and one-half times the hourly rate of wage. All hours worked on Thanksgiving Day and Christmas day shall be paid at double the hourly rate of wage.

W. All hours worked on Saturdays and Sundays (except make-up days due to conditions beyond the control of the employer)) shall be paid at one and one-half times the hourly rate of wage. All hours worked on holidays shall be paid at double the hourly rate of wage.

X. The first four (4) hours after eight (8) regular hours Monday through Friday and the first twelve (12) hours on Saturday shall be paid at one and one-half times the hourly rate of wage. All hours worked over twelve (12) hours Monday through Saturday, Sundays and holidays shall be paid at double the hourly rate of wage. When holiday falls on Saturday or Sunday, the day before Saturday, Friday, and the day after Sunday, Monday, shall be considered the holiday and all work performed shall be paid at double the hourly rate of wage.

Y. All hours worked outside the hours of 5:00 am and 5:00 pm (or such other hours as may be agreed upon by any employer and the employee) and all hours worked in excess of eight (8) hours per day (10 hours per day for a 4 x 10 workweek) and on Saturdays and holidays (except labor day) shall be paid at one and one-half times the hourly rate of wage. (except for employees who are absent from work without prior approval on a scheduled workday during the workweek shall be paid at the straight-time rate until they have worked 8 hours in a day (10 in a 4 x 10 workweek) or 40 hours during that workweek.) All hours worked Monday through Saturday over twelve (12) hours and all hours worked on Sundays and Labor Day shall be paid at double the hourly rate of wage.

Z. All hours worked on Saturdays and Sundays shall be paid at one and one-half times the hourly rate of wage. All hours worked on holidays shall be paid the straight time rate of pay in addition to holiday pay.

INFORMATIONAL COPY ONLY, NOT FOR BIDDING PURPOSES

2. ALL HOURS WORKED IN EXCESS OF EIGHT (8) HOURS PER DAY OR FORTY (40) HOURS PER WEEK SHALL BE PAID AT ONE AND ONE-HALF TIMES THE HOURLY RATE OF WAGE.

B. All hours worked on holidays shall be paid at one and one-half times the hourly rate of wage.

C. All hours worked on Sundays shall be paid at one and one-half times the hourly rate of wage. All hours worked on holidays shall be paid at two times the hourly rate of wage.

F. The first eight (8) hours worked on holidays shall be paid at the straight hourly rate of wage in addition to the holiday pay. All hours worked in excess of eight (8) hours on holidays shall be paid at double the hourly rate of wage.

G. All hours worked on Sunday shall be paid at two times the hourly rate of wage. All hours worked on paid holidays shall be paid at two and one-half times the hourly rate of wage including holiday pay.

H. All hours worked on Sunday shall be paid at two times the hourly rate of wage. All hours worked on holidays shall be paid at one and one-half times the hourly rate of wage.

O. All hours worked on Sundays and holidays shall be paid at one and one-half times the hourly rate of wage.

R. All hours worked on Sundays and holidays and all hours worked over sixty (60) in one week shall be paid at double the hourly rate of wage.

U. All hours worked on Saturdays shall be paid at one and one-half times the hourly rate of wage. All hours worked over 12 hours in a day or on Sundays and holidays shall be paid at double the hourly rate of wage.

W. The first two (2) hours after eight (8) regular hours Monday through Friday and the first eight (8) hours on Saturday shall be paid at one and one-half times the hourly rate of wage. All other hours worked Monday through Saturday, and all hours worked on Sundays and holidays shall be paid at double the hourly rate of wage. On a four-day, ten-hour weekly schedule, either Monday thru Thursday or Tuesday thru Friday schedule, all hours worked after ten shall be paid at double the hourly rate of wage. The first eight (8) hours worked on the fifth day shall be paid at one and one-half times the hourly rate of wage. All other hours worked on the fifth, sixth, and seventh days and on holidays shall be paid at double the hourly rate of wage.

3. ALL HOURS WORKED IN EXCESS OF EIGHT (8) HOURS PER DAY OR FORTY (40) HOURS PER WEEK SHALL BE PAID AT ONE AND ONE-HALF TIMES THE HOURLY RATE OF WAGE.

A. Work performed in excess of eight (8) hours of straight time per day, or ten (10) hours of straight time per day when four ten (10) hour shifts are established, or forty (40) hours of straight time per week, Monday through Friday, or outside the normal shift, and all work on Saturdays shall be paid at time and one-half the straight time rate. Hours worked over twelve hours (12) in a single shift and all work performed after 6:00 pm Saturday to 6:00 am Monday and holidays shall be paid at double the straight time rate of pay. Any shift starting between the hours of 6:00 pm and midnight shall receive an additional one dollar ($1.00) per hour for all hours worked that shift. The employer shall have the sole discretion to assign overtime work to employees. Primary consideration for overtime work shall be given to employees regularly assigned to the work to be performed on overtime situations. After an employee has worked eight (8) hours at an applicable overtime rate, all additional hours shall be at the applicable overtime rate until such time as the employee has had a break of eight (8) hours or more.

INFORMATIONAL COPY ONLY NOT FOR BIDDING PURPOSES

3. C. Work performed in excess of eight (8) hours of straight time per day, or ten (10) hours of straight time per day when four ten (10) hour shifts are established, or forty (40) hours of straight time per week, Monday through Friday, or outside the normal shift, and all work on Saturdays shall be paid at one and one-half times the hourly rate of wage. All work performed after 6:00 pm Saturday to 5:00 am Monday and Holidays shall be paid at double the hourly rate of wage. After an employee has worked eight (8) hours at an applicable overtime rate, all additional hours shall be at the applicable overtime rate until such time as the employee has had a break of eight (8) hours or more.

D. All hours worked between the hours of 6:00 pm and 6:00 am, Monday through Saturday, shall be paid at a premium rate of 15% over the hourly rate of wage. All other hours worked after 6:00 am on Saturdays, shall be paid at one and one-half times the hourly rate of wage. All hours worked on Sundays and holidays shall be paid at double the hourly rate of wage.

E. All hours worked Sundays and holidays shall be paid at double the hourly rate of wage. Each week, once 40 hours of straight time work is achieved, then any hours worked over 10 hours per day Monday through Saturday shall be paid at double the hourly wage rate.

F. All hours worked on Saturday shall be paid at one and one-half times the hourly rate of wage. All hours worked on Sunday shall be paid at two times the hourly rate of wage. All hours worked on paid holidays shall be paid at two and one-half times the hourly rate of wage including holiday pay.

H. All work performed on Sundays between March 16th and October 14th and all Holidays shall be compensated for at two (2) times the regular rate of pay. Work performed on Sundays between October 15th and March 15th shall be compensated at one and one half (1-1/2) times the regular rate of pay.

I. All hours worked on Saturdays shall be paid at one and one-half times the hourly rate of wage. In the event the job is down due to weather conditions during a five day work week (Monday through Friday,) or a four day-ten hour work week (Tuesday through Friday,) then Saturday may be worked as a voluntary make-up day at the straight time rate. However, Saturday shall not be utilized as a make-up day when a holiday falls on Friday. All hours worked Monday through Saturday over twelve (12) hours and all hours worked on Sundays and holidays shall be paid at double the hourly rate of wage.

4. ALL HOURS WORKED IN EXCESS OF EIGHT (8) HOURS PER DAY OR FORTY (40) HOURS PER WEEK SHALL BE PAID AT ONE AND ONE-HALF TIMES THE HOURLY RATE OF WAGE.

A. All hours worked in excess of eight (8) hours per day or forty (40) hours per week shall be paid at double the hourly rate of wage. All hours worked on Saturdays, Sundays and holidays shall be paid at double the hourly rate of wage.

B. All hours worked over twelve (12) hours per day and all hours worked on holidays shall be paid at double the hourly rate of wage.

C. On Monday through Friday, the first four (4) hours of overtime after eight (8) hours of straight time work shall be paid at one and one half (1-1/2) times the straight time rate of pay, unless a four (4) day ten (10) hour workweek has been established. On a four (4) day ten (10) hour workweek scheduled Monday through Thursday, or Tuesday through Friday, the first two (2) hours of overtime after ten (10) hours of straight time work shall be paid at one and one half (1-1/2) times the straight time rate of pay. On Saturday, the first twelve (12) hours of work shall be paid at one and one half (1-1/2) times the straight time rate of pay, except that if the job is down on Monday through Friday due to weather conditions or other conditions outside the control of the employer, the first ten (10) hours on Saturday may be worked at the straight time rate of pay. All hours worked over twelve (12) hours in a day and all hours worked on Sunday and Holidays shall be paid at two (2) times the straight time rate of pay.

INFORMATIONAL COPY ONLY / NOT FOR BIDDING PURPOSES

4. D. All hours worked in excess of eight (8) hours per day or forty (40) hours per week shall be paid at double the hourly rate of wage. All hours worked on Saturday, Sundays and holidays shall be paid at double the hourly rate of pay. Rates include all members of the assigned crew.

EXCEPTION:
On all multipole structures and steel transmission lines, switching stations, regulating, capacitor stations, generating plants, industrial plants, associated installations and substations, except those substations whose primary function is to feed a distribution system, will be paid overtime under the following rates:

The first two (2) hours after eight (8) regular hours Monday through Friday of overtime on a regular workday, shall be paid at one and one-half times the hourly rate of wage. All hours in excess of ten (10) hours will be at two (2) times the hourly rate of wage. The first eight (8) hours worked on Saturday will be paid at one and one-half (1-1/2) times the hourly rate of wage. All hours worked in excess of eight (8) hours on Saturday, and all hours worked on Sundays and holidays will be at the double the hourly rate of wage.

All overtime eligible hours performed on the above described work that is energized, shall be paid at the double the hourly rate of wage.

E. The first two (2) hours after eight (8) regular hours Monday through Friday and the first eight (8) hours on Saturday shall be paid at one and one-half times the hourly rate of wage. All other hours worked Monday through Saturday, and all hours worked on Sundays and holidays shall be paid at double the hourly rate of wage.

On a four-day, ten-hour weekly schedule, either Monday thru Thursday or Tuesday thru Friday schedule, all hours worked after ten shall be paid at double the hourly rate of wage. The Monday or Friday not utilized in the normal four-day, ten hour work week, and Saturday shall be paid at one and one half (1½) times the regular shift rate for the first eight (8) hours. All other hours worked Monday through Saturday, and all hours worked on Sundays and holidays shall be paid at double the hourly rate of wage.

F. All hours worked between the hours of 6:00 pm and 6:00 am, Monday through Saturday, shall be paid at a premium rate of 20% over the hourly rate of wage. All hours worked on Sundays shall be paid at one and one-half times the hourly rate of wage. All hours worked on holidays shall be paid at double the hourly rate of wage.

Holiday Codes

5. A. Holidays: New Year's Day, Memorial Day, Independence Day, Labor Day, Thanksgiving Day, Friday after Thanksgiving Day, and Christmas Day (7).

B. Holidays: New Year's Day, Memorial Day, Independence Day, Labor Day, Thanksgiving Day, Friday after Thanksgiving Day, the day before Christmas, and Christmas Day (8).

C. Holidays: New Year's Day, Presidents' Day, Memorial Day, Independence Day, Labor Day, Thanksgiving Day, the Friday after Thanksgiving Day, And Christmas Day (8).

D. Holidays: New Year's Day, Memorial Day, Independence Day, Labor Day, Thanksgiving Day, the Friday and Saturday after Thanksgiving Day, And Christmas Day (8).

H. Holidays: New Year's Day, Memorial Day, Independence Day, Thanksgiving Day, the Day after Thanksgiving Day, And Christmas (6).

I. Holidays: New Year's Day, Memorial Day, Independence Day, Labor Day, Thanksgiving Day, and Christmas Day (6).

J. Holidays: New Year's Day, Memorial Day, Independence Day, Thanksgiving Day, Friday after Thanksgiving Day, Christmas Eve Day, And Christmas Day (7).

INFORMATIONAL COPY ONLY, NOT FOR BIDDING PURPOSES

5. K. Holidays: New Year's Day, Presidents' Day, Memorial Day, Independence Day, Labor Day, Thanksgiving Day, Friday After Thanksgiving Day, The Day Before Christmas, And Christmas Day (9).

L. Holidays: New Year's Day, Martin Luther King Jr. Day, Memorial Day, Independence Day, Labor Day, Thanksgiving Day, Friday After Thanksgiving Day, And Christmas Day (8).

N. Holidays: New Year's Day, Presidents' Day, Memorial Day, Independence Day, Labor Day, Veterans' Day, Thanksgiving Day, The Friday After Thanksgiving Day, And Christmas Day (9).

P. Holidays: New Year's Day, Memorial Day, Independence Day, Labor Day, Thanksgiving Day, Friday And Saturday After Thanksgiving Day, The Day Before Christmas, And Christmas Day (9). If A Holiday Falls On Sunday, The Following Monday Shall Be Considered As A Holiday.

Q. Paid Holidays: New Year's Day, Memorial Day, Independence Day, Labor Day, Thanksgiving Day, and Christmas Day (6).

R. Paid Holidays: New Year's Day, Memorial Day, Independence Day, Labor Day, Thanksgiving Day, Day After Thanksgiving Day, One-Half Day Before Christmas Day, And Christmas Day. (7 1/2).

S. Paid Holidays: New Year's Day, Presidents' Day, Memorial Day, Independence Day, Labor Day, Thanksgiving Day, And Christmas Day (7).

T. Paid Holidays: New Year's Day, Washington's Birthday, Memorial Day, Independence Day, Labor Day, Thanksgiving Day, The Friday After Thanksgiving Day, Christmas Day, And The Day Before Or After Christmas (9).

Z. Holidays: New Year's Day, Memorial Day, Independence Day, Labor Day, Veterans Day, Thanksgiving Day, the Friday after Thanksgiving Day, And Christmas Day (8).

Holiday Codes Continued

6. A. Paid Holidays: New Year's Day, Presidents' Day, Memorial Day, Independence Day, Labor Day, Thanksgiving Day, The Friday After Thanksgiving Day, And Christmas Day (8).

E. Paid Holidays: New Year's Day, Day Before Or After New Year's Day, Presidents Day, Memorial Day, Independence Day, Labor Day, Thanksgiving Day, Day After Thanksgiving Day, Christmas Day, And A Half-Day On Christmas Eve Day. (9 1/2).

G. Paid Holidays: New Year's Day, Martin Luther King Jr. Day, Presidents' Day, Memorial Day, Independence Day, Labor Day, Veterans' Day, Thanksgiving Day, The Friday After Thanksgiving Day, Christmas Day, And Christmas Eve Day (11).

H. Paid Holidays: New Year's Day, New Year's Eve Day, Memorial Day, Independence Day, Labor Day, Thanksgiving Day, Friday After Thanksgiving Day, Christmas Day, The Day After Christmas, And A Floating Holiday (10).

I. Paid Holidays: New Year's Day, Memorial Day, Independence Day, Labor Day, Thanksgiving Day, Friday After Thanksgiving Day, And Christmas Day (7).

T. Paid Holidays: New Year's Day, Presidents' Day, Memorial Day, Independence Day, Labor Day, Thanksgiving Day, The Friday After Thanksgiving Day, The Last Working Day Before Christmas Day, And Christmas Day (9).

INFORMATIONAL COPY ONLY NOT FOR BIDDING PURPOSES

6. Z. Holidays: New Year's Day, Memorial Day, Independence Day, Labor Day, Thanksgiving Day, Friday after Thanksgiving Day, And Christmas Day (7). If a holiday falls on Saturday, the preceding Friday shall be considered as the holiday. If a holiday falls on Sunday, the following Monday shall be considered as the holiday.

Holiday Codes Continued

7. A. Holidays: New Year's Day, Memorial Day, Independence Day, Labor Day, Thanksgiving Day, The Friday And Saturday After Thanksgiving Day, And Christmas Day (8). Any Holiday Which Falls On A Sunday Shall Be Observed As A Holiday On The Following Monday. If any of the listed holidays falls on a Saturday, the preceding Friday shall be a regular work day.

B. Holidays: New Year's Day, Memorial Day, Independence Day, Labor Day, Thanksgiving Day, the Friday and Saturday after Thanksgiving Day, And Christmas Day (8). Any holiday which falls on a Sunday shall be observed as a holiday on the following Monday. Any holiday which falls on a Saturday shall be observed as a holiday on the preceding Friday.

C. Holidays: New Year's Day, Martin Luther King Jr. Day, Memorial Day, Independence Day, Labor Day, Thanksgiving Day, The Friday After Thanksgiving Day, And Christmas Day (8). Any holiday which falls on a Sunday shall be observed as a holiday on the following Monday. Any holiday which falls on a Saturday shall be observed as a holiday on the preceding Friday.

D. Paid Holidays: New Year's Day, Memorial Day, Independence Day, Labor Day, Veteran's Day, Thanksgiving Day, the Friday after Thanksgiving Day, And Christmas Day (8). Unpaid Holidays: President's Day. Any paid holiday which falls on a Sunday shall be observed as a holiday on the following Monday. Any paid holiday which falls on a Saturday shall be observed as a holiday on the preceding Friday.

E. Holidays: New Year's Day, Memorial Day, Independence Day, Labor Day, Thanksgiving Day, the Friday after Thanksgiving Day, And Christmas Day (7). Any holiday which falls on a Sunday shall be observed as a holiday on the following Monday. Any holiday which falls on a Saturday shall be observed as a holiday on the preceding Friday.

F. Holidays: New Year's Day, Memorial Day, Independence Day, Labor Day, Thanksgiving Day, the Friday after Thanksgiving Day, the last working day before Christmas day and Christmas day (8). Any holiday which falls on a Sunday shall be observed as a holiday on the following Monday. Any holiday which falls on a Saturday shall be observed as a holiday on the preceding Friday.

G. Holidays: New Year's Day, Memorial Day, Independence Day, Labor Day, Thanksgiving Day, and Christmas Day (6). Any holiday which falls on a Sunday shall be observed as a holiday on the following Monday.

H. Holidays: New Year's Day, Martin Luther King Jr. Day, Independence Day, Memorial Day, Labor Day, Thanksgiving Day, the Friday after Thanksgiving Day, the Last Working Day before Christmas Day and Christmas Day (9). Any holiday which falls on a Sunday shall be observed as a holiday on the following Monday. Any holiday which falls on a Saturday shall be observed as a holiday on the preceding Friday.

I. Holidays: New Year's Day, President's Day, Independence Day, Memorial Day, Labor Day, Thanksgiving Day, The Friday After Thanksgiving Day, The Day Before Christmas Day And Christmas Day (9). Any holiday which falls on a Sunday shall be observed as a holiday on the following Monday. Any holiday which falls on a Saturday shall be observed as a holiday on the preceding Friday.

J. Holidays: New Year's Day, Independence Day, Memorial Day, Labor Day, Thanksgiving Day and Christmas Day (6). Any holiday which falls on a Sunday shall be observed as a holiday on the following Monday. Any holiday which falls on a Saturday shall be observed as a holiday on the preceding Friday.

INFORMATIONAL COPY ONLY, NOT FOR BIDDING PURPOSES

7. K. Holidays: New Year's Day, Memorial Day, Independence Day, Thanksgiving Day, the Friday and Saturday after Thanksgiving Day, And Christmas Day (8). Any holiday which falls on a Sunday shall be observed as a holiday on the following Monday. Any holiday which falls on a Saturday shall be observed as a holiday on the preceding Friday.

L. Holidays: New Year's Day, Memorial Day, Labor Day, Independence Day, Thanksgiving Day, the Last Work Day before Christmas Day, And Christmas Day (7). Any holiday which falls on a Sunday shall be observed as a holiday on the following Monday. Any holiday which falls on a Saturday shall be observed as a holiday on the preceding Friday.

M. Paid Holidays: New Year's Day, The Day after or before New Year's Day, President's Day, Memorial Day, Independence Day, Labor Day, Thanksgiving Day, the Friday after Thanksgiving Day, Christmas Day, And the Day after or before Christmas Day 10). Any holiday which falls on a Sunday shall be observed as a holiday on the following Monday. Any holiday which falls on a Saturday shall be observed as a holiday on the preceding Friday.

N. Holidays: New Year's Day, Memorial Day, Independence Day, Labor Day, Thanksgiving Day, the Friday after Thanksgiving Day, And Christmas Day (7). Any holiday which falls on a Sunday shall be observed as a holiday on the following Monday. When Christmas falls on a Saturday, the preceding Friday shall be observed as a holiday.

P. Holidays: New Year's Day, Memorial Day, Independence Day, Labor Day, Thanksgiving Day, Friday after Thanksgiving Day, And Christmas Day (7). Any holiday which falls on a Sunday shall be observed as a holiday on the following Monday.

Q. Holidays: New Year's Day, Memorial Day, Independence Day, Labor Day, Thanksgiving Day, the Friday after Thanksgiving Day, the Last Working Day before Christmas Day and Christmas Day (8). Any holiday which falls on a Sunday shall be observed as a holiday on the following Monday. If any of the listed holidays falls on a Saturday, the preceding Friday shall be a regular work day.

R. Paid Holidays: New Year's Day, the day after or before New Year's Day, President's Day, Memorial Day, Independence Day, Labor Day, Thanksgiving Day, the Friday after Thanksgiving Day, Christmas Day, and the day after or before Christmas Day (10). If any of the listed holidays fall on Saturday, the preceding Friday shall be observed as the holiday. If any of the listed holidays falls on a Sunday, the day observed by the Nation shall be considered a holiday and compensated accordingly.

S. Paid Holidays: New Year's Day, Memorial Day, Independence Day, Labor Day, Thanksgiving Day, Friday After Thanksgiving Day, Christmas Day, The Day After Christmas, And A Floating Holiday (9). If any of the listed holidays falls on a Sunday, the day observed by the Nation shall be considered a holiday and compensated accordingly.

T. Paid Holidays: New Year's Day, The Day After Or Before New Year's Day, President's Day, Memorial Day, Independence Day, Labor Day, Thanksgiving Day, The Friday After Thanksgiving Day, Christmas Day, and The Day After Or Before Christmas Day. (10). If any of the listed holidays falls on a Sunday, the day observed by the Nation shall be considered a holiday and compensated accordingly. Any holiday which falls on a Saturday shall be observed as a holiday on the preceding Friday.

Note Codes

8. A. In addition to the hourly wage and fringe benefits, the following depth premiums apply to depths of fifty feet or more:
Over 50' To 100' -$2.00 per Foot for Each Foot Over 50 Feet
Over 100' To 150' -$3.00 per Foot for Each Foot Over 100 Feet
Over 150' To 220' -$4.00 per Foot for Each Foot Over 150 Feet
Over 220' -$5.00 per Foot for Each Foot Over 220 Feet

INFORMATIONAL COPY ONLY, NOT FOR BIDDING PURPOSES

8. C. In addition to the hourly wage and fringe benefits, the following depth premiums apply to depths of fifty feet or more:
Over 50' To 100' -$1.00 per Foot for Each Foot Over 50 Feet
Over 100' To 150' -$1.50 per Foot for Each Foot Over 100 Feet
Over 150' To 200' -$2.00 per Foot for Each Foot Over 150 Feet
Over 200' -Divers May Name Their Own Price

D. Workers working with supplied air on hazmat projects receive an additional $1.00 per hour.

L. Workers on hazmat projects receive additional hourly premiums as follows -Level A: $0.75, Level B: $0.50, And Level C: $0.25.

M. Workers on hazmat projects receive additional hourly premiums as follows: Levels A & B: $1.00, Levels C & D: $0.50.

N. Workers on hazmat projects receive additional hourly premiums as follows -Level A: $1.00, Level B: $0.75, Level C: $0.50, And Level D: $0.25.

P. Workers on hazmat projects receive additional hourly premiums as follows -Class A Suit: $2.00, Class B Suit: $1.50, Class C Suit: $1.00, And Class D Suit $0.50.

Q. The highest pressure registered on the gauge for an accumulated time of more than fifteen (15) minutes during the shift shall be used in determining the scale paid.

R. Effective August 31, 2012 – A Traffic Control Supervisor shall be present on the project whenever flagging or spotting or other traffic control labor is being utilized. A Traffic Control Laborer performs the setup, maintenance and removal of all temporary traffic control devices and construction signs necessary to control vehicular, bicycle, and pedestrian traffic during construction operations. Flaggers and Spotters shall be posted where shown on approved Traffic Control Plans or where directed by the Engineer. All flaggers and spotters shall possess a current flagging card issued by the State of Washington, Oregon, Montana, or Idaho. These classifications are only effective on or after August 31, 2012.

S. Effective August 31, 2012 – A Traffic Control Supervisor shall be present on the project whenever flagging or spotting or other traffic control labor is being utilized. Flaggers and Spotters shall be posted where shown on approved Traffic Control Plans or where directed by the Engineer. All flaggers and spotters shall possess a current flagging card issued by the State of Washington, Oregon, Montana, or Idaho. This classification is only effective on or after August 31, 2012.

T. Effective August 31, 2012 – A Traffic Control Laborer performs the setup, maintenance and removal of all temporary traffic control devices and construction signs necessary to control vehicular, bicycle, and pedestrian traffic during construction operations. Flaggers and Spotters shall be posted where shown on approved Traffic Control Plans or where directed by the Engineer. All flaggers and spotters shall possess a current flagging card issued by the State of Washington, Oregon, Montana, or Idaho. This classification is only effective on or after August 31, 2012.

INFORMATIONAL COPY ONLY - NOT FOR BIDDING PURPOSES

INFORMATIONAL COPY ONLY, NOT FOR BIDDING PURPOSES

State of Washington
Department of Labor & Industries

Prevailing Wage Section - Telephone 360-902-5335
PO Box 44540, Olympia, WA 98504-4540

Washington State Prevailing Wage

The PREVAILING WAGES listed here include both the hourly wage rate and the hourly rate of fringe benefits. On public works projects, worker's wage and benefit rates must add to not less than this total. A brief description of overtime calculation requirements are provided on the Benefit Code Key.

Journey Level Prevailing Wage Rates for the Effective Date: 3/19/2015

County	Trade	Job Classification	Wage	Holiday	Overtime	Note
Grant	Carpenters	Carpenters	$40.20	5A	1B	8N
Grant	Cement Masons	Journey Level	$38.85	7B	1N	
Grant	Flaggers	Journey Level	$33.31	7B	1M	
Grant	Laborers	Air And Hydraulic Track Drill	$35.95	7B	1M	
Grant	Laborers	Asphalt Raker	$35.95	7B	1M	
Grant	Laborers	Asphalt Roller, Walking	$35.68	7B	1M	
Grant	Laborers	Brick Pavers	$35.41	7B	1M	
Grant	Laborers	Brush Hog Feeder	$35.41	7B	1M	
Grant	Laborers	Brush Machine	$35.95	7B	1M	
Grant	Laborers	Caisson Worker, Free Air	$35.95	7B	1M	
Grant	Laborers	Carpenter Tender	$35.41	7B	1M	
Grant	Laborers	Cement Finisher Tender	$35.68	7B	1M	
Grant	Laborers	Cement Handler	$35.41	7B	1M	
Grant	Laborers	Chain Saw Operator & Faller	$35.95	7B	1M	
Grant	Laborers	Clean-up Laborer	$35.41	7B	1M	
Grant	Laborers	Compaction Equipment	$35.68	7B	1M	
Grant	Laborers	Concrete Crewman	$35.41	7B	1M	
Grant	Laborers	Concrete Saw, Walking	$35.68	7B	1M	
Grant	Laborers	Concrete Signalman	$35.41	7B	1M	
Grant	Laborers	Concrete Stack	$35.95	7B	1M	
Grant	Laborers	Confined Space Attendant	$35.41	7B	1M	
Grant	Laborers	Crusher Feeder	$35.41	7B	1M	
Grant	Laborers	Demolition	$35.41	7B	1M	
Grant	Laborers	Demolition Torch	$35.68	7B	1M	
Grant	Laborers	Dope Pot Fireman, Non-mechanical	$35.68	7B	1M	
Grant	Laborers	Driller Helper (when Required To Move & Position Machine)	$35.68	7B	1M	
Grant	Laborers	Drills With Dual Masts	$36.23	7B	1M	
Grant	Laborers	Dry Stack Walls	$35.41	7B	1M	

INFORMATIONAL COPY ONLY - NOT FOR BIDDING PURPOSES

Grant	Laborers	Dumpman	$35.41	7B	1M	
Grant	Laborers	Erosion Control Laborer	$35.41	7B	1M	
Grant	Laborers	Final Detail Cleanup (i.e., Dusting, Vacuuming, WINDOW CLEANING; Not Construction Debris Cleanup)	$33.31	7B	1M	
Grant	Laborers	Firewatch	$35.41	7B	1M	
Grant	Laborers	Form Cleaning Machine Feeder, Stacker	$35.41	7B	1M	
Grant	Laborers	Form Setter, Paving	$35.68	7B	1M	
Grant	Laborers	General Laborer	$35.41	7B	1M	
Grant	Laborers	Grade Checker	$37.94	7B	1M	
Grant	Laborers	Grout Machine Header Tender	$35.41	7B	1M	
Grant	Laborers	Guard Rail	$35.41	7B	1M	
Grant	Laborers	Gunite	$35.95	7B	1M	
Grant	Laborers	Hazardous Waste Worker (level A)	$36.23	7B	1M	
Grant	Laborers	Hazardous Waste Worker (level B)	$35.95	7B	1M	
Grant	Laborers	Hazardous Waste Worker (level C)	$35.68	7B	1M	
Grant	Laborers	Hazardous Waste Worker (level D)	$35.41	7B	1M	
Grant	Laborers	Hdpe Or Similar Liner Installer	$35.41	7B	1M	
Grant	Laborers	High Scaler	$35.95	7B	1M	
Grant	Laborers	Jackhammer Operator Miner, Class "b"	$35.68	7B	1M	
Grant	Laborers	Laser Beam Operator	$35.95	7B	1M	
Grant	Laborers	Miner, Class "a"	$35.41	7B	1M	
Grant	Laborers	Miner, Class "c"	$35.95	7B	1M	
Grant	Laborers	Miner, Class "d"	$36.23	7B	1M	
Grant	Laborers	Monitor Operator, Air Track Or Similar Mounting	$35.95	7B	1M	
Grant	Laborers	Mortar Mixer	$35.95	7B	1M	
Grant	Laborers	Nipper	$35.41	7B	1M	
Grant	Laborers	Nozzleman	$35.95	7B	1M	
Grant	Laborers	Nozzleman, Water (to Include Fire Hose), Air Or Steam	$35.68	7B	1M	
Grant	Laborers	Pavement Breaker, 90 Lbs. & Over	$35.95	7B	1M	
Grant	Laborers	Pavement Breaker, Under 90 Lbs.	$35.68	7B	1M	
Grant	Laborers	Pipelayer	$35.95	7B	1M	
Grant	Laborers	Pipelayer, Corrugated Metal Culvert And Multi-plate	$35.68	7B	1M	
Grant	Laborers	Pipewrapper	$35.95	7B	1M	
Grant	Laborers	Plasterer Tenders	$35.95	7B	1M	
Grant	Laborers	Pot Tender	$35.68	7B	1M	

INFORMATIONAL COPY ONLY. NOT FOR BIDDING PURPOSES

Grant	Laborers	Powderman	$37.60	7B	1M	
Grant	Laborers	Powderman Helper	$35.68	7B	1M	
Grant	Laborers	Power Buggy Operator	$35.68	7B	1M	
Grant	Laborers	Power Tool Operator, Gas, Electric, Pneumatic	$35.68	7B	1M	
Grant	Laborers	Railroad Equipment, Power Driven, Except Dual Mobile	$35.68	7B	1M	
Grant	Laborers	Railroad Power Spiker Or Puller, Dual Mobile	$35.68	7B	1M	
Grant	Laborers	Remote Equipment Operator	$36.23	7B	1M	
Grant	Laborers	Remote Equipment Operator (i.e. Compaction And Demolition)	$35.68	7B	1M	
Grant	Laborers	Rigger/signal Person	$35.68	7B	1M	
Grant	Laborers	Riprap Person	$35.41	7B	1M	
Grant	Laborers	Rodder & Spreader	$35.68	7B	1M	
Grant	Laborers	Sandblast Tailhoseman	$35.41	7B	1M	
Grant	Laborers	Scaffold Erector, Wood Or Steel	$35.41	7B	1M	
Grant	Laborers	Stake Jumper	$35.41	7B	1M	
Grant	Laborers	Structural Mover	$35.41	7B	1M	
Grant	Laborers	Tailhoseman (water Nozzle)	$35.41	7B	1M	
Grant	Laborers	Timber Bucker & Faller (by Hand)	$35.41	7B	1M	
Grant	Laborers	Track Laborer (rr)	$35.41	7B	1M	
Grant	Laborers	Traffic Control Laborer	$33.31	7B	1M	8T
Grant	Laborers	Traffic Control Supervisor	$34.31	7B	1M	8S
Grant	Laborers	Trencher, Shawnee	$35.68	7B	1M	
Grant	Laborers	Trenchless Technology Technician	$35.95	7B	1M	
Grant	Laborers	Truck Loader	$35.41	7B	1M	
Grant	Laborers	Tugger Operator	$35.68	7B	1M	
Grant	Laborers	Vibrators, All	$35.95	7B	1M	
Grant	Laborers	Wagon Drills	$35.68	7B	1M	
Grant	Laborers	Water Pipe Liner	$35.68	7B	1M	
Grant	Laborers	Welder, Electric, Manual Or Automatic (hdpe Or Similar Pipe And Liner)	$36.23	7B	1M	
Grant	Laborers	Well-point Person	$35.41	7B	1M	
Grant	Laborers	Wheelbarrow, Power Driven	$35.68	7B	1M	
Grant	Power Equipment Operators	A-frame Truck (2 Or More Drums)	$39.94	7B	1M	8D
Grant	Power Equipment Operators	A-frame Truck (single Drum)	$39.33	7B	1M	8D
Grant	Power Equipment Operators	Asphalt Plant Operator	$40.54	7B	1M	8D
Grant	Power Equipment Operators	Assistant Plant Operator, Fireman Or Pugmixer (asphalt)	$39.33	7B	1M	8D
Grant	Power Equipment Operators		$39.94	7B	1M	8D

INFORMATIONAL COPY ONLY - NOT FOR BIDDING PURPOSES

		Assistant Refrigeration Plant & Chiller Operator (over 1000 Ton)				
Grant	Power Equipment Operators	Assistant Refrigeration Plant (under 1000 Ton)	$39.33	7B	1M	8D
Grant	Power Equipment Operators	Automatic Subgrader (ditches & Trimmers)	$40.54	7B	1M	8D
Grant	Power Equipment Operators	Backfillers (cleveland & Similar)	$39.94	7B	1M	8D
Grant	Power Equipment Operators	Backhoe & Hoe Ram (under 3/4 Yd.)	$40.26	7B	1M	8D
Grant	Power Equipment Operators	Backhoe (45,000 Gw & Under)	$40.26	7B	1M	8D
Grant	Power Equipment Operators	Backhoe (45,000 Gw To 110,000 Gw)	$40.54	7B	1M	8D
Grant	Power Equipment Operators	Backhoe (over 110,000 Gw)	$40.81	7B	1M	8D
Grant	Power Equipment Operators	Backhoes & Hoe Ram (3 Yds & Over)	$40.81	7B	1M	8D
Grant	Power Equipment Operators	Backhoes & Hoe Ram (3/4 Yd. To 3 Yd.)	$40.54	7B	1M	8D
Grant	Power Equipment Operators	Bagley Or Stationary Scraper	$39.33	7B	1M	8D
Grant	Power Equipment Operators	Batch & Wet Mix Operator (multiple Units, 2 & Incl. 4)	$40.54	7B	1M	8D
Grant	Power Equipment Operators	Batch Plant & Wet Mix Operator, Single Unit (concrete)	$39.94	7B	1M	8D
Grant	Power Equipment Operators	Batch Plant (over 4 Units)	$40.54	7B	1M	8D
Grant	Power Equipment Operators	Belt Finishing Machine	$39.33	7B	1M	8D
Grant	Power Equipment Operators	Belt Loader (kocal Or Similar)	$39.94	7B	1M	8D
Grant	Power Equipment Operators	Belt-crete Conveyors With Power Pack Or Similar	$39.94	7B	1M	8D
Grant	Power Equipment Operators	Bending Machine	$39.94	7B	1M	8D
Grant	Power Equipment Operators	Bit Grinders	$39.01	7B	1M	8D
Grant	Power Equipment Operators	Blade (finish & Bluetop), Automatic, Cmi, Abc, Finish Athey & Huber & Similar When Used As Automatic	$40.81	7B	1M	8D
Grant	Power Equipment Operators	Blade Operator (motor Patrol & Attachments)	$40.54	7B	1M	8D
Grant	Power Equipment Operators	Blower Operator (cement)	$39.33	7B	1M	8D
Grant	Power Equipment Operators	Boat Operator	$39.01	7B	1M	8D
Grant	Power Equipment Operators	Bob Cat (skid Steer)	$39.94	7B	1M	8D
Grant	Power Equipment Operators	Bolt Threading Machine	$39.01	7B	1M	8D
Grant	Power Equipment Operators	Boom Cats (side)	$40.54	7B	1M	8D
Grant	Power Equipment Operators	Boring Machine (earth)	$39.94	7B	1M	8D
Grant	Power Equipment Operators	Boring Machine (Rock Under 8" Bit - Quarry Master, Joy Or Similar)	$39.94	7B	1M	8D
Grant	Power Equipment Operators	Bump Cutter (wayne, Saginau Or Similar)	$39.94	7B	1M	8D
Grant	Power Equipment Operators		$40.54	7B	1M	8D

INFORMATIONAL COPY ONLY. NOT FOR BIDDING PURPOSES

		Cableway Controller (dispatcher)				
Grant	Power Equipment Operators	Cableway Operators	$40.81	7B	1M	8D
Grant	Power Equipment Operators	Canal Lining Machine (concrete)	$39.94	7B	1M	8D
Grant	Power Equipment Operators	Carrydeck & Boom Truck (under 25 Tons)	$40.26	7B	1M	8D
Grant	Power Equipment Operators	Cement Hog	$39.33	7B	1M	8D
Grant	Power Equipment Operators	Chipper (without Crane) Cleaning & Doping Machine (pipeline)	$39.94	7B	1M	8D
Grant	Power Equipment Operators	Clamshell, Dragline	$41.91	7B	1M	8D
Grant	Power Equipment Operators	Compactor (self-propelled With Blade)	$40.54	7B	1M	8D
Grant	Power Equipment Operators	Compressor (2000 Cfm Or Over, 2 Or More, Gas Diesel Or Electric Power)	$39.33	7B	1M	8D
Grant	Power Equipment Operators	Compressors (under 2000 Cfm, Gas, Diesel Or Electric Power)	$39.01	7B	1M	8D
Grant	Power Equipment Operators	Concrete Cleaning / Decontamination Machine Operator	$40.81	7B	1M	8D
Grant	Power Equipment Operators	Concrete Pump Boon Truck	$40.54	7B	1M	8D
Grant	Power Equipment Operators	Concrete Pumps (squeeze-crete, Flow-crete, Whitman & Similar)	$40.10	7B	1M	8D
Grant	Power Equipment Operators	Concrete Saw (multiple Cut)	$39.33	7B	1M	8D
Grant	Power Equipment Operators	Concrete Slip Form Paver	$40.54	7B	1M	8D
Grant	Power Equipment Operators	Conveyor Aggregate Delivery Systems (c.a.d.)	$40.54	7B	1M	8D
Grant	Power Equipment Operators	Crane Oiler- Driver (cdl Required) & Cable Tender, Mucking Machine	$39.01	7B	1M	8D
Grant	Power Equipment Operators	Cranes (25 Tons & Under), All Attachments Incl. Clamshell, Dragline	$40.26	7B	1M	8D
Grant	Power Equipment Operators	Cranes (25 Tons To And Including 45 Tons), All Attachments Incl. Clamshell, Dragline	$40.54	7B	1M	8D
Grant	Power Equipment Operators	Cranes (45 Tons To 85 Tons), All Attachments Incl. Clamshell And Dragline	$40.81	7B	1M	8D
Grant	Power Equipment Operators	Cranes (85 Tons & Over) And All Climbing, Overhead, Rail & Tower. All Attachments Incl.	$41.91	7B	1M	8D
Grant	Power Equipment Operators	Crusher Feeder	$39.01	7B	1M	8D
Grant	Power Equipment Operators	Crusher, Grizzle & Screening Plant Operator	$40.54	7B	1M	8D
Grant	Power Equipment Operators	Curb Extruder (asphalt Or Concrete)	$40.10	7B	1M	8D

INFORMATIONAL COPY ONLY, NOT FOR BIDDING PURPOSES

Grant	Power Equipment Operators	Deck Engineer	$39.94	7B	1M	8D
Grant	Power Equipment Operators	Deck Hand	$39.01	7B	1M	8D
Grant	Power Equipment Operators	Derricks & Stifflegs (65 Tons & Over)	$40.81	7B	1M	8D
Grant	Power Equipment Operators	Derricks & Stifflegs (under 65 Tons)	$40.26	7B	1M	8D
Grant	Power Equipment Operators	Distributor Leverman	$39.33	7B	1M	8D
Grant	Power Equipment Operators	Ditch Witch Or Similar	$39.33	7B	1M	8D
Grant	Power Equipment Operators	Dope Pots (power Agitated	$39.33	7B	1M	8D
Grant	Power Equipment Operators	Dozer / Tractor (up To D-6 Or Equivalent) And Traxcavator	$39.94	7B	1M	8D
Grant	Power Equipment Operators	Dozer / Tractors (d-6 & Equivalent & Over)	$40.54	7B	1M	8D
Grant	Power Equipment Operators	Dozer, 834 R/t & Similar	$40.54	7B	1M	8D
Grant	Power Equipment Operators	Drill Doctor	$40.54	7B	1M	8D
Grant	Power Equipment Operators	Driller Licensed	$41.91	7B	1M	8D
Grant	Power Equipment Operators	Drillers Helper	$39.01	7B	1M	8D
Grant	Power Equipment Operators	Drilling Equipment (8" Bit & Over - Robbins, Reverse Circulation & Similar)	$40.26	7B	1M	8D
Grant	Power Equipment Operators	Drills (churn, Core, Calyx Or Diamond)	$40.10	7B	1M	8D
Grant	Power Equipment Operators	Elevating Belt (holland Type)	$40.81	7B	1M	8D
Grant	Power Equipment Operators	Elevating Belt-type Loader (euclid, Barber Green & Similar)	$39.94	7B	1M	8D
Grant	Power Equipment Operators	Elevating Grader-type Loader (dumor, Adams Or Similar)	$39.94	7B	1M	8D
Grant	Power Equipment Operators	Elevator Hoisting Materials	$39.33	7B	1M	8D
Grant	Power Equipment Operators	Equipment Serviceman, Greaser & Oiler	$40.10	7B	1M	8D
Grant	Power Equipment Operators	Fireman & Heater Tender	$39.01	7B	1M	8D
Grant	Power Equipment Operators	Fork Lift Or Lumber Stacker, Hydra-life & Similar	$39.33	7B	1M	8D
Grant	Power Equipment Operators	Generator Plant Engineers (diesel Or Electric)	$39.94	7B	1M	8D
Grant	Power Equipment Operators	Gin Trucks (pipeline)	$39.33	7B	1M	8D
Grant	Power Equipment Operators	Grade Checker	$40.26	7B	1M	8D
Grant	Power Equipment Operators	Gunite Combination Mixer & Compressor	$39.94	7B	1M	8D
Grant	Power Equipment Operators	H.d. Mechanic	$40.81	7B	1M	8D
Grant	Power Equipment Operators	H.d. Welder	$40.81	7B	1M	8D
Grant	Power Equipment Operators	Heavy Equipment Robotics Operator	$40.81	7B	1M	8D
Grant	Power Equipment Operators	Helicopter Pilot	$41.91	7B	1M	8D
Grant	Power Equipment Operators	Helper, Mechanic Or Welder, H.D	$39.01	7B	1M	8D
Grant	Power Equipment Operators	Hoe Ram	$40.26	7B	1M	8D
Grant	Power Equipment Operators		$40.10	7B	1M	8D

INFORMATIONAL COPY ONLY, NOT FOR BIDDING PURPOSES

		Hoist (2 Or More Drums Or Tower Hoist)				
Grant	Power Equipment Operators	Hoist, Single Drum	$39.33	7B	1M	8D
Grant	Power Equipment Operators	Hydraulic Platform Trailers (goldhofer, Shaurerly And Similar)	$40.81	7B	1M	8D
Grant	Power Equipment Operators	Hydro-seeder, Mulcher, Nozzleman	$39.01	7B	1M	8D
Grant	Power Equipment Operators	Lime Batch Tank Operator (recycle Train)	$40.54	7B	1M	8D
Grant	Power Equipment Operators	Lime Brain Operator (recycle Train)	$40.54	7B	1M	8D
Grant	Power Equipment Operators	Loader (360 Degrees Revolving Koehring Scooper Or Similar)	$40.81	7B	1M	8D
Grant	Power Equipment Operators	Loader Operator (front-end & Overhead, 4 Yds. Incl. 8 Yds.)	$40.54	7B	1M	8D
Grant	Power Equipment Operators	Loaders (bucket Elevators And Conveyors)	$39.33	7B	1M	8D
Grant	Power Equipment Operators	Loaders (overhead & Front-end, Over 8 Yds. To 10 Yds.)	$40.81	7B	1M	8D
Grant	Power Equipment Operators	Loaders (overhead & Front-end, Under 4 Yds.. R/t)	$40.10	7B	1M	8D
Grant	Power Equipment Operators	Loaders (overhead And Front-end, 10 Yds. & Over)	$41.91	7B	1M	8D
Grant	Power Equipment Operators	Locomotive Engineer	$39.94	7B	1M	8D
Grant	Power Equipment Operators	Longitudinal Float	$39.33	7B	1M	8D
Grant	Power Equipment Operators	Master Environmental Maintenance Technician	$40.81	7B	1M	8D
Grant	Power Equipment Operators	Mixer (portable - Concrete)	$39.33	7B	1M	8D
Grant	Power Equipment Operators	Mixermobile	$39.94	7B	1M	8D
Grant	Power Equipment Operators	Mobile Crusher Operator (recycle Train)	$40.54	7B	1M	8D
Grant	Power Equipment Operators	Mucking Machine	$39.94	7B	1M	8D
Grant	Power Equipment Operators	Multiple Dozer Units With Single Blade	$40.54	7B	1M	8D
Grant	Power Equipment Operators	Pavement Breaker, Hydra-hammer & Similar	$39.33	7B	1M	8D
Grant	Power Equipment Operators	Paving (dual Drum)	$40.26	7B	1M	8D
Grant	Power Equipment Operators	Paving Machine (asphalt And Concrete)	$40.54	7B	1M	8D
Grant	Power Equipment Operators	Piledriving Engineers	$40.26	7B	1M	8D
Grant	Power Equipment Operators	Plant Oiler	$39.01	7B	1M	8D
Grant	Power Equipment Operators	Posthole Auger Or Punch	$39.94	7B	1M	8D
Grant	Power Equipment Operators	Power Broom	$39.33	7B	1M	8D
Grant	Power Equipment Operators	Pump (grout Or Jet)	$39.94	7B	1M	8D
Grant	Power Equipment Operators	Pumpman	$39.01	7B	1M	8D
Grant	Power Equipment Operators	Quad-track Or Similar Equipment	$40.54	7B	1M	8D
Grant	Power Equipment Operators	Railroad Ballast Regulation Operator (self-propelled)	$39.33	7B	1M	8D

INFORMATIONAL COPY ONLY NOT FOR BIDDING PURPOSES

Grant	Power Equipment Operators	Railroad Power Tamper Operator (self-propelled)	$39.33	7B	1M	8D
Grant	Power Equipment Operators	Railroad Tamper Jack Operator (self-propelled)	$39.33	7B	1M	8D
Grant	Power Equipment Operators	Railroad Track Liner Operator (self-propelled)	$40.26	7B	1M	8D
Grant	Power Equipment Operators	Refrigeration Plant Engineer (1000 Tons & Over)	$40.26	7B	1M	8D
Grant	Power Equipment Operators	Refrigeration Plant Engineer (under 1000 Ton)	$40.10	7B	1M	8D
Grant	Power Equipment Operators	Rollerman (finishing Asphalt Pavement)	$40.54	7B	1M	8D
Grant	Power Equipment Operators	Rollers, All Types On Subgrade, Including Seal And Chip Coating (farm Type, Case, John Deere And Similar,or Compacting Vibrator), Except When Pulled B	$39.01	7B	1M	8D
Grant	Power Equipment Operators	Roto Mill (pavement Grinder)	$40.54	7B	1M	8D
Grant	Power Equipment Operators	Rotomill Groundsman	$40.10	7B	1M	8D
Grant	Power Equipment Operators	Rubber-tired Scrapers (multiple Engine With Three Or More Scrapers)	$40.81	7B	1M	8D
Grant	Power Equipment Operators	Rubber-tired Skidders (r/t With Or Without Attachments)	$40.10	7B	1M	8D
Grant	Power Equipment Operators	Scrapers, All, Rubber-tired	$40.54	7B	1M	8D
Grant	Power Equipment Operators	Screed Operator	$40.54	7B	1M	8D
Grant	Power Equipment Operators	Shovels (3 Yds. & Over)	$40.81	7B	1M	8D
Grant	Power Equipment Operators	Shovels (under 3 Yds.)	$40.54	7B	1M	8D
Grant	Power Equipment Operators	Signalman (whirleys, Highline, Hammerheads Or Similar)	$40.26	7B	1M	8D
Grant	Power Equipment Operators	Soil Stabilizer (p & H Or Similar)	$39.94	7B	1M	8D
Grant	Power Equipment Operators	Spray Curing Machine (concrete)	$39.33	7B	1M	8D
Grant	Power Equipment Operators	Spreader Box (self-propelled)	$39.33	7B	1M	8D
Grant	Power Equipment Operators	Spreader Machine	$39.94	7B	1M	8D
Grant	Power Equipment Operators	Steam Cleaner	$39.01	7B	1M	8D
Grant	Power Equipment Operators	Straddle Buggy (ross & Similar On Construction Job Only)	$39.33	7B	1M	8D
Grant	Power Equipment Operators	Surface Heater & Planer Machine	$40.10	7B	1M	8D
Grant	Power Equipment Operators	Tractor (farm Type R/t With Attachments, Except Backhoe)	$39.33	7B	1M	8D
Grant	Power Equipment Operators	Traverse Finish Machine	$39.94	7B	1M	8D
Grant	Power Equipment Operators	Trenching Machines (7 Ft. Depth & Over)	$40.54	7B	1M	8D
Grant	Power Equipment Operators	Trenching Machines (under 7 Ft. Depth Capacity)	$40.10	7B	1M	8D

INFORMATIONAL COPY ONLY - NOT FOR BIDDING PURPOSES

Grant	Power Equipment Operators	Tug Boat Operator	$40.54	7B	1M	8D
Grant	Power Equipment Operators	Tugger Operator	$39.33	7B	1M	8D
Grant	Power Equipment Operators	Turnhead (with Re-screening)	$40.10	7B	1M	8D
Grant	Power Equipment Operators	Turnhead Operator	$39.94	7B	1M	8D
Grant	Power Equipment Operators	Ultra High Pressure Wateriet Cutting Tool System Operator, (30,000 Psi)	$40.81	7B	1M	8D
Grant	Power Equipment Operators	Vactor Guzzler, Super Sucker	$40.54	7B	1M	8D
Grant	Power Equipment Operators	Vacuum Blasting Machine Operator	$40.81	7B	1M	8D
Grant	Power Equipment Operators	Vacuum Drill (reverse Circulation Drill Under 8" Bit)	$40.10	7B	1M	8D
Grant	Power Equipment Operators	Welding Machine	$39.01	7B	1M	8D
Grant	Power Equipment Operators	Whirleys & Hammerheads, All	$40.81	7B	1M	8D
Grant	Surveyors	All Classifications	$28.57	Null	1	
Grant	Truck Drivers	Dump Truck	$26.09		1	
Grant	Truck Drivers	Dump Truck And Trailer	$26.09		1	
Grant	Truck Drivers	Other Trucks	$27.84		1	
Grant	Truck Drivers	Transit Mixer	$10.00		1	

INFORMATIONAL COPY ONLY, NOT FOR BIDDING PURPOSES

INFORMATIONAL COPY ONLY, NOT FOR BIDDING PURPOSES

Appendix A

Grant County

Public Works Department

REPORT

Geotechnical Engineering Evaluation
Grant County Public Works
Bridge #399

May 1, 2013

INFORMATIONAL COPY ONLY, NOT FOR BIDDING PURPOSES

TABLE OF CONTENTS

	Page
INTRODUCTION	3
PROPOSED CONSTRUCTION	4
EVALUATION PROCEDURES	4
SURFACE CONDITIONS	4
SOIL AND GEOLOGIC CONDITIONS	5
SUBSURFACE CONDITIONS	5
LABORATORY TESTING	6
CONCLUSIONS/RECOMMENDATIONS	6
General	6
Excavation Characteristics	7
Structural Fill	7
Foundation Design	8
Lateral Earth Pressures	8
EVALUATION LIMITATIONS	9

INFORMATIONAL COPY ONLY, NOT FOR BIDDING PURPOSES

REPORT
Geotechnical Engineering Evaluation
Grant County Public Works
Bridge #399

INTRODUCTION

Grant County Public Works has competed the geotechnical engineering evaluation for the proposed Bridge reconstruction of Bridge #399 in Grant County, Washington. The purpose of the evaluation was to assess the soil and geologic conditions within the proposed development area and to provide geotechnical engineering recommendations with respect to reconstruction. To complete the evaluation of the site we performed the following scope of work:

1. Performed literature search of the geologic and soil engineering information for the site and surrounding properties.

2. Performed a field reconnaissance of the geologic and soil conditions for the site and surrounding area.

3. Performed a field evaluation by logging Test Pits. The soils encountered were visually classified at the time of excavation and the subsurface profiles were logged. Selected soil samples were obtained for laboratory testing.

4. Performed laboratory tests to assess some of the soil engineering properties of selected soil samples.

5. Performed engineering analyses and prepared recommendations to assist project planning and design.

6. Prepared this summary report of our findings.

INFORMATIONAL COPY ONLY / NOT FOR BIDDING PURPOSES

PROPOSED CONSTRUCTION

It is our understanding the Bridge reconstruction project will likely include concrete prestress girders, concrete abutments, approach roadway work and guardrail. A detour bridge is also likely for this project.

EVALUATION PROCEDURES

Seven (7) test pits were excavated at the Bridge location, three on the east end and four on the west end of the bridge. The location of the Test Pits is shown on the site plan. The Test Pits were excavated by Grant County Road Department personnel and equipment, and logged by a geotechnical engineer from our office on April 11, 2013.

The Test Pits were excavated by a backhoe with a standard 24-inch bucket equipped with standard soil excavation teeth. The soils encountered were visually classified and the subsurface provides were logged. In-situ density and moisture content of the soils encountered were measured using a nuclear densometer. Selected soil samples were obtained for laboratory testing. The testing Test Pits were backfilled by the backhoe but not compacted

SURFACE CONDITIONS

Existing Bridge #399 is located on Road W-NW in the west ½ of Section 5, Township 20 North, Range 23 East, Willamette Meridian. The Bridge crosses a main line single track of the BNSF Railroad in a cut section through basalt bedrock. The location is on the west side of an erosional valley and is surrounded by Agricultural ground.

INFORMATIONAL COPY ONLY, NOT FOR BIDDING PURPOSES

SOIL AND GEOLOGIC CONDITIONS

The U.S.D.A. Soil Conservation Service (SCS) in the Soil Survey of Grant County has mapped the soil at the Bridge #399 site as the Starbuck-Prosser Complex. These soils typically consist of fine sandy loam. The Starbuck-Prosser soils were formed in Loess over basalt. These soils are reportedly characterized as having moderate permeability (0.6 to 2.0 inches per hour), being well drained, and having moderate runoff. The soil has a low shrink/swell potential. The pH of the soils reportedly ranges from 6.6 to 8.4. The corrosive potential of the soil is considered moderate to high for uncoated steel and low for concrete.

SUBSURFACE CONDITIONS

In general, the soil profile at Bridge #399 consists of a shallow fine sandy silt. These soils extended to depths ranging from 0.7 feet to 3.5 feet below the existing ground surface. These soils were in a moist and medium dense condition. Basalt bedrock was encountered below these soils. The basalt was moderately fractured, hard and resistant to excavation. The east approach roadway to the bridge consists of 0 to 2 feet of granular fill on top of the native soils.

Ground water was not encountered at the Bridge location at the time of the field evaluation. It is unlikely ground water will be an issue at this location due to the shallow basalt bedrock and the railroad cut into the basalt. It should be noted that the elevation of the water table will vary with seasonal changes in precipitation, infiltration, irrigation, and other factors.

The Unified Soil Classification System (USCS) can be used to interpret the terms used throughout this report. Subsurface conditions may vary across the site. Detailed descriptions of the subsurface conditions encountered in the Test Pits, and the USCS are presented in Appendix A.

INFORMATIONAL COPY ONLY, NOT FOR BIDDING PURPOSES

LABORATORY TESTING

Selected soil samples were tested to assess the gradation, maximum density and optimum moisture content. The gradation of the soil is included in Appendix A. The maximum density and optimum moisture content results are included in Appendix A. The information gained from the laboratory testing was utilized in our calculations to support our geotechnical engineering recommendations.

CONCLUSIONS/RECOMMENDATIONS

It is our opinion that the site is suitable for the proposed Bridge reconstruction project with respect to the explored soil and geologic conditions. The following recommendations are presented to assist the planning and design of the project. Our site development recommendations are based on our field and laboratory work and our past experience with similar soil and geologic conditions in the vicinity and our understanding of the proposed construction.

General

The existing Bridge is located over the BNSF main rail line and spans a rock cut in basalt bedrock. Conventional spread footings may be used to support the new bridge and our exploration methods were tailored toward this recommendation.

Existing spread footings supporting the end spans of the existing bridge appear to be performing adequately and are likely founded on the basalt bedrock.

INFORMATIONAL COPY ONLY, NOT FOR BIDDING PURPOSES

Excavation Characteristics

The on-site soils may be excavated with conventional soil excavation equipment. If excavations are greater than four feet deep, such as in the case of footing excavations or utility trenches, we recommend that the temporary excavations be sloped at 1.5:1 (horizontal to vertical) in conjunction with OSHA regulations and local codes. The fine sandy silt soils have a tendency to cave when either very dry or wet to saturated. The basalt bedrock was moderately fractured and resistant to excavation by backhoe. A trackhoe would likely be able to excavate 1 to 2 feet into the basalt surface.

Structural Fill

We separate fill into two categories; structural fill and non-structural fill. Structural fill is defined as fill which underlies, or is situated within five feet of, building or pavement areas. Non-structural fill is fill which is at least five feet outside of building and pavement areas. Structural fill should consist of GW, GP, GM, SW, or SM soil as designated by the Unified Soil Classification System.

Structural fill should be placed in eight-inch-thick, loose lifts at near-optimum moisture content and compacted to a minimum 92% of the maximum dry density as determined by ASTM D-1557 (Modified Proctor). The on-site native soils appear to be suitable for use as a structural fill. It will be necessary to moisture condition these soils to near optimum moisture content before placing and compacting them as structural fill.

INFORMATIONAL COPY ONLY, NOT FOR BIDDING PURPOSES

Foundation Design

We recommend that the proposed Bridge be supported by conventional spread footings bearing on basalt bedrock. The footings should be excavated a minimum of 6 inches into the basalt

All foundation bearing surfaces should be free of loose soil and debris. The footings should bear at least 2 feet below the adjacent ground surface for embedment depth and to protect against frost action.

We recommend that the foundations for the Bridge be designed based on maximum allowable bearing pressure of 5000 pounds per square foot (psf) for the bearing on basalt bedrock. Ultimate bearing capacity is 15,000 psf. The allowable bearing pressures may be increased by up to 30% to account for transient live loads, such as wind or seismic. Based on these recommendations, we are of the opinion that total and differential settlements will be on the order of 2/3 inch and one-half inch over a 100 foot span, respectively.

We recommend using 32 degrees for internal soil friction angle, 112 pounds per cubic foot for soil unit weight, and the resistance factors presented in Table 10.5.5.2.2-1 may be used.

Lateral Earth Pressures

Below-grade walls should be designed to resist lateral earth pressures. We recommend the lateral earth pressures be calculated using an equivalent fluid pressure (efp) of 50 pounds per cubic foot for the at-rest case (no wall movement), 34 pounds per cubic foot for the active case (wall movement away from soil mass). A coefficient of friction between the site soils and concrete of $f_s = 0.4$ should be used for retaining wall design. The above equivalent fluid pressures assume that the wall is drained and that there are no hydrostatic forces acting on the wall.

INFORMATIONAL COPY ONLY, NOT FOR BIDDING PURPOSES

EVALUATION LIMITATIONS

This report has been prepared to assist the planning and design for the reconstruction of Bridge #399. Our recommendations consist of professional opinions and conclusions made in accordance with generally accepted geotechnical engineering principles and practices. This acknowledgment is in lieu of all warranties either expressed or implied.

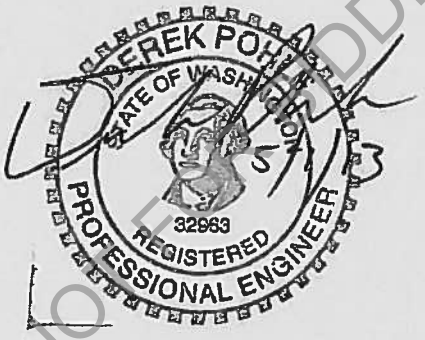

INFORMATIONAL COPY ONLY, NOT FOR BIDDING PURPOSES

APPENDIX A

INFORMATIONAL COPY ONLY, NOT FOR BIDDING PURPOSES

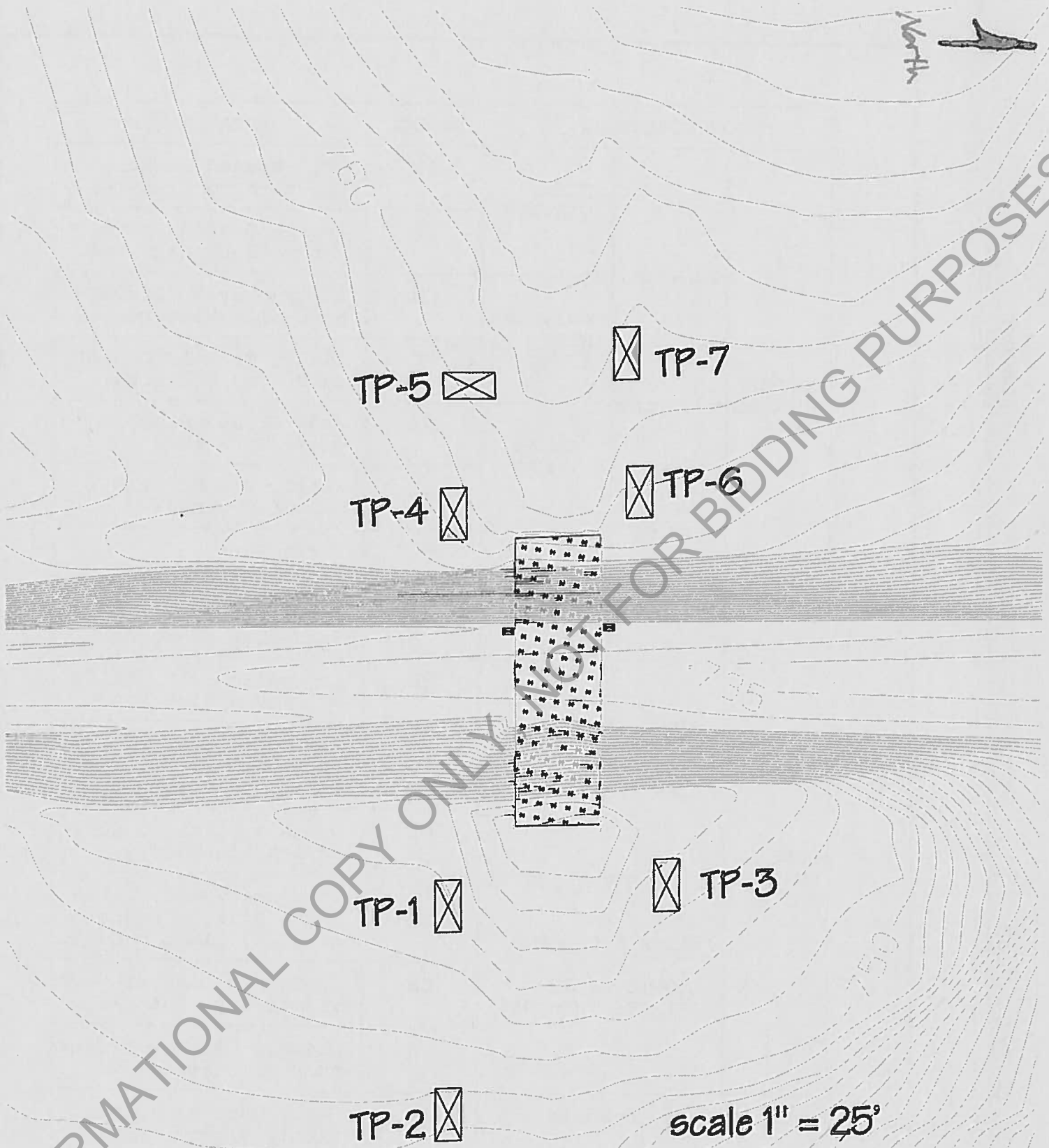

INFORMATIONAL COPY ONLY - NOT FOR BIDDING PURPOSES

REVISIONS BY DATE

BY DATE FILE

CHECKED BY DATE

MAJOR DIVISIONS			SYMBOL	TYPICAL NAMES
COARSE GRAINED SOILS	GRAVELS	CLEAN GRAVELS	GW	Well-Graded Gravel, Gravel-Sand Mixtures.
			GP	Poorly-Graded Gravel, Gravel-Sand Mixtures.
		GRAVELS WITH FINES	GM	Silty Gravel, Gravel-Sand-Silt Mixtures.
			GC	Clayey Gravel, Gravel-Sand-Clay Mixtures.
	SANDS	CLEAN SANDS	SW	Well-Graded Sand, Gravelly Sand.
			SP	Poorly-Graded Sand, Gravelly Sand.
		SANDS WITH FINES	SM	Silty Sand, Sand-Silt Mixtures.
			SC	Clayey Sand, Sand-Clay Mixtures.
FINE GRAINED SOILS	SILTS AND CLAYS LIQUID LIMIT LESS THAN 50%		ML	Inorganic Silt, Silty or Clayey Fine Sand.
			CL	Inorganic Clay of Low to Medium Plasticity, Sandy or Silty Clay.
			OL	Organic Silt and Clay of Low Plasticity.
	SILTS AND CLAYS LIQUID LIMIT GREATER THAN 50%		MH	Inorganic Silt, Micaceous Silt, Fine Sand or Silt, Elastic Silt.
			CH	Inorganic Clay of High Plasticity, Fat Clay.
			OH	Organic Clay of Medium to High Plasticity.
Highly Organic Soils			PT	Peat, Muck and Other Highly Organic Soils.

UNIFIED SOIL CLASSIFICATION SYSTEM

ASTM D-2487, Standard Classification of Soils
For Engineering Purposes

INFORMATIONAL COPY ONLY, NOT FOR BIDDING PURPOSES

PLATE 2

TP-1		
0.0' - 1.0'	**ALLUVIUM -**	Medium brown fine sandy SILT (ML). Medium dense, moist, few cobbles near basalt bedrock surface.
1.0' -1.2'	**BEDROCK -**	BASALT. Grey, hard, moderately fractured.
TP-2		
0.0' - 2.0'	**ALLUVIUM -**	same
2.0' - 2.2'	**BEDROCK -**	same
TP-3		
0.0' - 0.7'	**ALLUVIUM -**	same
0.7' - 1.2'	**BEDROCK -**	same
TP 4		
0.0' - 2.5'	**ALLUVIUM -**	same
2.5' - 2.6'	**BEDROCK -**	same
TP-5		
0.0' - 3.25'	**ALLUVIUM -**	same
3.25' - 3.4'	**BEDROCK -**	same
TP-6		
0.0' - 3.0'	**ALLUVIUM -**	same
3.0' - 3.2'	**BEDROCK -**	same
TP-7		
0.0' - 3.5'	**ALLUVIUM -**	same
3.5' - 4.0'	**BEDROCK -**	same

INFORMATIONAL COPY ONLY, NOT FOR BIDDING PURPOSES

Washington State Department of Transportation

Moisture - Density Relationship Report

Field Sample Number	Lab Number	Control Number	Federal Aid Number
TP-2	GCPW		

SR Number	Section	Source of Materials	Type of Material
	Bridge #399	Subgrade	Med Brn Silt w/sand

Percent Passing No. 4	Date Taken	Date Tested	Station	Reference to C/L	Reference to Grade
		4/16/2013			-1'

Can Number	B1	B2	B3	B4	B5	B6			
Specimen Wt. + Cyl.	5940.8	6014.5	6067.1	6097.5	6075.2	6065.2			
Cylinder Wt.	4236.3	4236.3	4236.3	4236.3	4236.3	4236.3			
Specimen Wt. (Grams)	1704.5	1778.2	1830.8	1861.2	1838.9	1828.9			
Specimen Wt. (lbs)									
Volume of Cylinder	30	30	30	30	30	30			
Wet Density	112.6	117.5	121.0	122.0	121.5	120.9			
Wet Sample + Can	750.2	719.0	710.2	787.0	674.0	668.9			
Dry Sample + Can	698.2	652.5	640.8	701.9	595.8	585.7			
Weight of Moisture	52.0	66.5	69.4	85.1	78.2	83.2			
Weight of Can	162.0	162.7	163.0	164.1	162.8	165.2			
Weight of Dry Soil	536.2	540.5	477.8	537.8	433.0	420.5			
% Moisture	9.7	12.3	14.5	15.8	18.1	19.8			
Dry Density	103.6	104.6	105.7	105.4	102.9	100.9			
Speedy Gauge									
Grams % Moisture									
Speedy Dry Density									

NOTE: Oven Dry & Speedy to be used for correlation on typical materials.

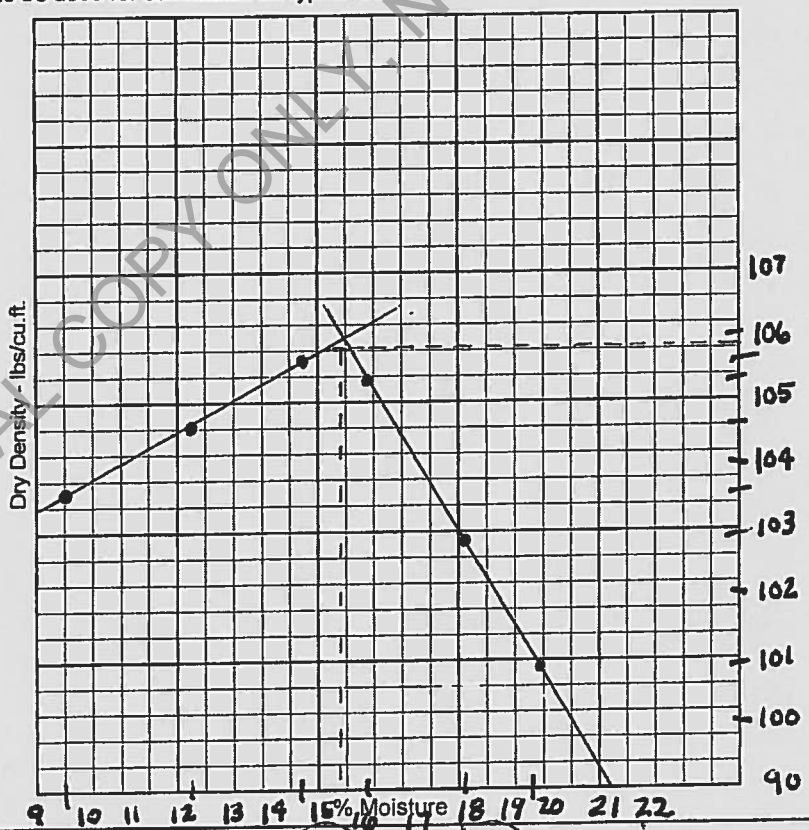

Optimum Moisture	Maximum Density	By	Date
15.4%	105.8	Dave C Derting	4/16/13

DOT Form 350-514 EF
Revised 4/97

INFORMATIONAL COPY ONLY, NOT FOR BIDDING PURPOSES

GRANT COUNTY
SIEVE ANALYSIS

Contract #	Quanity:	Pit Name and #	Contractor:
Bridge #399			
Sample # TP-2	**Date:** 4-16-13	**Time**	**Sample Wt. (min. 20 Lbs.)(crusher,stockpile,other.)**
Sample Wt 1051.0	**% Moisture of Sample:**		

Test: N/A Pass ☐ Fail ☐

Gradation; Pass: N/A **Fail:**

Fracture (spec. 75% tol. 70%) N/A

S.E. (N/A

Pass/Fail Comments:

size	Wt. Retained	% Passed	% Specifications	Tolerance
2 1/2		%	%	
1 1/2		%	%	
1		%	%	
5/8		%	%	
1/2		%	%	
3/8		%	%	
1/4		%	%	
Pan		4	%	
Total		8	%	
		16	%	
		30	%	
		40	%	
		50	%	
		100	%	
		100	%	
		200	%	

size	Retained	Passing
4	17.6	2 % 98 %
8	26.3	3 % 97 %
16	38.3	4 % 96 %
30	51.7	5 % 95 %
40	69.8	7 % 93 %
50		% %
80		% %
100	132.8	13 % 87 %
200	241.8	23.4 % 76.6 %
Pan	642.7	62.2 37.8%
Total	643.4	Washed Wt. Pan Check

Tare | Wet wt. 1051.0 | Dry wt. 1033.1

Construction Manual Tests

T-61

Fracture formula

$$P = \left[\frac{[F + (Q/2)]}{F + Q + N}\right](100)$$

T-176

$$SE = \frac{Sand\ (100)}{Clay}$$

T-255

$$\%\ Moisture = \frac{wet - dry}{dry}$$

T-27/11

$$correction = \frac{pan\ \#4 -}{split\ \#4 -}$$

Split the (#4) above a min. of 500g Per T 27/11 (watch overloaded fine screens) 470 g max under #4

	split wt		correction		#4 weight		corrected wt. Log in above
#40		X		+		=	
#200		X		+		=	
Pan		X		+		=	

SHOW WORK BELOW! USE BACK OF TEST SHEET FOR ADDITIONAL CALCULATIONS:

Fracture:(700g Min)

$$P = \left[\frac{[\_\_\_ + (\_\_\_ /2)]}{\_\_\_ + \_\_\_ + \_\_\_}\right](100) = N/A$$

Percent Moisture:

$$\%Moisture = \frac{\_\_\_ - \_\_\_}{\_\_\_} = \_\_\_$$

approximately 1000g

Sand Equivalent:Average 2 tests

$$SE = \frac{(100)}{\_\_\_} = N/A$$

Correction for bringing reduced sample back to proper weight:

$$correction = \frac{\_\_\_}{\_\_\_} = \_\_\_$$

Inspector's Signature	Date:	Contractor's Signature	Date
Dave C Neely	4/16/13		

D Wilsey 12/19/06

INFORMATIONAL COPY ONLY, NOT FOR BIDDING PURPOSES

INFORMATIONAL COPY ONLY, NOT FOR BIDDING PURPOSES

Appendix B

BNSF Overpass Agreement

Includes

Exhibit A – Easement Display

Exhibit C – Contractor Requirements

Exhibit C-1 – Agreement Between BNSF Railway Company and the Contractor

Exhibit F – BNSF Bridge Requirements

INFORMATIONAL COPY ONLY, NOT FOR BIDDING PURPOSES

INFORMATIONAL COPY ONLY, NOT FOR BIDDING PURPOSES

OVERPASS AGREEMENT

BNSF File No. BF10006809
Trinidad Bridge Overpass
U.S. D.O.T. No. 065807P
LS 0037
MP1624.90
COLUMBIA RIVER Subdivision

This Agreement **("Agreement")**, is executed to be effective as of 12,03,2014 **("Effective Date")**, by and between BNSF RAILWAY COMPANY, a Delaware corporation **("BNSF")**, and the Grant County, Washington, a political subdivision of the State of Washington **("Agency")**.

RECITALS:

WHEREAS, BNSF owns and operates a line of railroad in and through Grant County, State of Washington; and

WHEREAS, the existing Bridge #399 Overpass will be permanently closed, vacated and removed upon completion of construction and the placing in service of the new Trinidad Bridge Overpass, such closure, vacation and removal to be evidenced by a separate agreement between the parties hereto.

NOW, THEREFORE, in consideration of the mutual covenants and agreements of the parties contained herein, the receipt and sufficiency of which are hereby acknowledged, the parties agree as follows:

ARTICLE I) SCOPE OF WORK

1. The term **"Project"** as used herein includes any and all work related to the construction of the proposed Trinidad Bridge Overpass (hereinafter referred to as the **"Structure"**), more particularly described on the Exhibit A attached hereto and incorporated herein, including, but not limited to, any and all changes to telephone, telegraph, signal and electrical lines and appurtenances, temporary and permanent track work, fencing, grading, alterations to or new construction of drainage facilities, preliminary and construction engineering and contract preparation. Additionally, temporary controls during construction must be in compliance with Section 8A-08, "Temporary Traffic Control Zones" of the Manual of Uniform Traffic Control Devices ("MUTCD"), U.S. Department of Transportation.

INFORMATIONAL COPY ONLY - NOT FOR BIDDING PURPOSES

ARTICLE II) BNSF OBLIGATIONS

In consideration of the covenants of Agency set forth herein and the faithful performance thereof, BNSF agrees as follows:

1. Upon Agency's payment to BNSF of an administrative fee in the sum of Two Thousand and No/100 Dollars ($2,000), together with the Temporary Construction License Fee in the sum of Twenty and 66/100 Dollars ($20.66), BNSF hereby grants to Agency, its successors and assigns, upon and subject to the terms and conditions set forth in this Agreement, a temporary non-exclusive license (hereinafter called, "Temporary Construction License") to construct the Structure across or upon the portion of BNSF's right-of-way described further on Exhibit A-1, excepting and reserving BNSF's rights, and the rights of any others who have obtained, or may obtain, permission or authority from BNSF, to do the following:

(a) Operate, maintain, renew and/or relocate any and all existing railroad track or tracks, wires, pipelines and other facilities of like character upon, over or under the surface of said right-of-way;

(b) Construct, operate, maintain, renew and/or relocate upon said right-of-way, without limitation, such facilities as the BNSF may from time to time deem appropriate, provided such facilities do not materially interfere with the Agency's use of the Structure;

(c) Otherwise use or operate the right-of-way as BNSF may from time to time deem appropriate, provided such use or operations does not materially interfere with the Agency's use of the Structure; and

(d) Require the Agency or its contractor to execute a Temporary Construction Crossing Agreement, for any temporary crossing requested to aid in the construction of this Project.

The term of the Temporary Construction License begins on the Effective Date and ends on the earlier of (i) substantial completion of the Structure, or (ii) 18 months following the Effective Date. The Temporary Construction License and related rights given by BNSF to Agency in this provision are without warranty of title of any kind, express or implied, and no covenant of warranty of title will be implied from the use of any word or words herein contained. The Temporary Construction License is for construction of the Structure only and shall not be used by Agency for any other purpose. Agency acknowledges and agrees that Agency shall not have the right, under the Temporary Construction License, to use the Structure for any other purpose than construction. In the event Agency is evicted by anyone owning, or claiming title to or any interest in said right-of-way, BNSF will not be liable to Agency for any damages, losses or any expenses of any nature whatsoever. The granting of similar rights to others, subsequent to the date of this Agreement, will not impair or interfere with the rights granted to Agency herein.

INFORMATIONAL COPY ONLY, NOT FOR BIDDING PURPOSES

Upon Agency's payment to BNSF of the additional sum of Three Hundred twenty-three and 69/100 Dollars ($323.69), such payment to be made within thirty (30) days of issuing the Notice to Proceed pursuant to Article III, Section 17 of this Agreement, and provided further that Agency is in compliance with the term and conditions of this Agreement, BNSF will grant to Agency, its successors and assigns, an easement (hereinafter called, the "Easement") to enter upon and use that portion of BNSF's right-of-way as is necessary to use and maintain the Structure, substantially in the form of Exhibit B attached to this Agreement. If Agency fails to pay BNSF within the thirty day time period set forth in the preceding sentence, BNSF may stop construction of the Project until full payment is received by BNSF.

2. BNSF will furnish all labor, materials, tools, and equipment for railroad work required for the construction of the Project, such railroad work and the estimated cost thereof being as shown on Exhibit D attached hereto and made a part hereof. In the event construction on the Project has not commenced within six (6) months following the Effective Date, BNSF may, in its sole and absolute discretion, revise the cost estimates set forth in said Exhibit D. In such event, the revised cost estimates will become a part of this Agreement as though originally set forth herein. Any item of work incidental to the items listed on Exhibit D not specifically mentioned therein may be included as a part of this Agreement upon written approval of Agency, which approval will not be unreasonably withheld. Construction of the Project must include the following railroad work by BNSF:

(a) Procurement of materials, equipment and supplies necessary for the railroad work;

(b) Preliminary engineering, design, and contract preparation;

(c) Furnishing of flagging services during construction of the Project as required and set forth in further detail on Exhibit C;

(d) Furnishing engineering and inspection as required in connection with the construction of the Project;

(e) Providing a contract project coordinator, at Agency's expense, to serve as a project manager for the Project;

3. BNSF will do all railroad work set forth in Article II, Section 2 above on an actual cost basis, when BNSF, in its sole discretion, determines it is required by its labor agreements to perform such work with its own employees working under applicable collective bargaining agreements.

4. Agency agrees to reimburse BNSF for work of an emergency nature caused by Agency or Agency's contractor in connection with the Project which BNSF deems is

INFORMATIONAL COPY ONLY NOT FOR BIDDING PURPOSES

reasonably necessary for the immediate restoration of railroad operations, or for the protection of persons or BNSF property. Such work may be performed by BNSF without prior approval of Agency and Agency agrees to fully reimburse BNSF for all such emergency work.

5. BNSF may charge Agency for insurance expenses, including self-insurance expenses, when such expenses cover the cost of Employer's Liability (including, without limitation, liability under the Federal Employer's Liability Act) in connection with the construction of the Project. Such charges will be considered part of the actual cost of the Project, regardless of the nature or amount of ultimate liability for injury, loss or death to BNSF's employees, if any.

6. During the construction of the Project, BNSF will send Agency progressive invoices detailing the costs of the railroad work performed by BNSF under this Agreement. Agency must reimburse BNSF for completed force-account work within thirty (30) days of the date of the invoice for such work. Upon completion of the Project, BNSF will send Agency a detailed invoice of final costs, segregated as to labor and materials for each item in the recapitulation shown on Exhibit D. Pursuant to this section and Article IV, Section 7 herein, Agency must pay the final invoice within ninety (90) days of the date of the final invoice. BNSF will assess a finance charge of .033% per day (12% per annum) on any unpaid sums or other charges due under this Agreement which are past its credit terms. The finance charge continues to accrue daily until the date payment is received by BNSF, not the date payment is made or the date postmarked on the payment. Finance charges will be assessed on delinquent sums and other charges as of the end of the month and will be reduced by amounts in dispute and any unposted payments received by the month's end. Finance charges will be noted on invoices sent to Agency under this section.

ARTICLE III) AGENCY OBLIGATIONS

In consideration of the covenants of BNSF set forth herein and the faithful performance thereof, Agency agrees as follows:

1. Agency must furnish to BNSF plans and specifications for the Project. A digital copy of said plans, together with calculations, and specifications in **English Units**, must be submitted to BNSF for approval prior to commencement of any construction. BNSF will give Agency final written approval of the plans and specifications substantially in the form of Exhibit E, attached to this Agreement and made a part hereof. Upon BNSF's final written approval of the plans and specifications, said plans and specifications will become part of this Agreement and are hereby incorporated herein. Any approval of the plans and specifications by BNSF shall in no way obligate BNSF in any manner with respect to the finished product design and/or construction. Any approval by BNSF shall mean only that the plans and specifications meet the subjective standards of BNSF, and such approval by BNSF shall not be deemed to mean that the plans and specifications

INFORMATIONAL COPY ONLY - NOT FOR BIDDING PURPOSES

or construction is structurally sound and appropriate or that such plans and specifications meet applicable regulations, laws, statutes or local ordinances and/or building codes.

2. Agency must make any required application and obtain all required permits and approvals for the construction of the Project.

3. Agency must provide for and maintain minimum vertical and horizontal clearances, as required in Exhibit C and as approved by BNSF as part of the plans and specifications for the Project.

4. Agency must acquire all rights of way necessary for the construction of the Project.

5. Agency must make any and all arrangements, in compliance with BNSF's Utility Accommodation Manual (http://www.bnsf.com/communities/faqs/pdf/utility.pdf), for the installation or relocation of wire lines, pipe lines and other facilities owned by private persons, companies, corporations, political subdivisions or public utilities other than BNSF which may be necessary for the construction of the Project..

6. Agency must construct the Project as shown on the attached Exhibit A and do all work ("Agency's Work") provided for in the plans and specifications for the Project, except railroad work that will be performed by BNSF hereunder. Agency must furnish all labor, materials, tools and equipment for the performance of Agency's Work. The principal elements of Agency's Work are as follows:

(a) Construction of the Structure;

(b) All necessary grading and paving, including backfill of excavations and restoration of disturbed vegetation on BNSF's right-of-way;

(c) Provide suitable drainage, both temporary and permanent;

(d) Intentionally left blank;

(e) Intentionally left blank;

(f) Intentionally left blank;

(g) Provide appropriate pedestrian control during construction;

(h) Intentionally left blank;

(i) Installation and maintenance of an 8-ft. high fence and/or concrete combination (throw fence) on the outside barrier of the Structure;

INFORMATIONAL COPY ONLY, NOT FOR BIDDING PURPOSES

(j) Job site cleanup including removal of all construction materials, concrete debris, surplus soil, refuse, contaminated soils, asphalt debris, litter and other waste materials to the satisfaction of BNSF;

(k) Intentionally left blank.

7. Agency must apply and maintain said D.O.T. Crossing number 065807P in a conspicuous location on the Structure.

8. Agency's Work must be performed by Agency or Agency's contractor in a manner that will not endanger or interfere with the safe and timely operations of BNSF and its facilities.

9. For any future inspection or maintenance, either routine or otherwise, performed by subcontractors on behalf of the Agency, Agency shall require the subcontractors to comply with the provisions of the attached Exhibit C and execute the agreement attached hereto as Exhibit C-1. Prior to performing any future maintenance with its own personnel, Agency shall: comply with all of BNSF's applicable safety rules and regulations; require any Agency employee performing maintenance to complete the safety training program at the BNSF's Internet Website; notify BNSF when, pursuant to the requirements of Exhibit C, a flagger is required to be present; procure, and have approved by BNSF's Risk Management Department, Railroad Protective Liability insurance.

10. Agency must require its contractor(s) to notify BNSF's Roadmaster at least thirty (30) calendar days prior to requesting a BNSF flagman in accordance with the requirements of Exhibit C attached hereto. Additionally, Agency must require its contractor(s) to notify BNSF's Manager of Public Projects thirty (30) calendar days prior to commencing work on BNSF property or near BNSF tracks.

11. Agency or its contractor(s) must submit four (4) copies of any plans (including two sets of calculations in **English Units**) for proposed shoring, falsework or cribbing to be used over, under, or adjacent to BNSF's tracks to BNSF's Manager of Public Projects for approval. The shoring, falsework or cribbing used by Agency's contractor shall comply with the BNSF Bridge Requirements set forth on Exhibit F and all applicable requirements promulgated by state and federal agencies, departments, commissions and other legislative bodies. If necessary, Agency must submit for approval two (2) copies of a professionally engineered demolition plan, as set forth in Exhibit G, with applicable calculations to BNSF's Manager of Public Projects. The existing Bridge #399 will not be removed until BNSF approves Agency's demolition plan in writing.

12. Agency must include the following provisions in any contract with its contractor(s) performing work on said Project:

INFORMATIONAL COPY ONLY, NOT FOR BIDDING PURPOSES

(a) The Contractor is placed on notice that fiber optic, communication and other cable lines and systems (collectively, the "Lines") owned by various telecommunications companies may be buried on BNSF's property or right-of-way. The locations of these Lines have been included on the plans based on information from the telecommunications companies. The Contractor will be responsible for contacting BNSF's Engineering Representative – Jeffery Stiver (509-536-2594), BNSF's Signal Representative – Gordon McElroy (509-664-2267) and the telecommunications companies and notifying them of any work that may damage these Lines or facilities and/or interfere with their service. The Contractor must also mark all Lines shown on the plans or marked in the field in order to verify their locations. The Contractor must also use all reasonable methods when working in the BNSF right-of-way or on BNSF property to determine if any other Lines (fiber optic, cable, communication or otherwise) may exist.

(b) The Contractor will be responsible for the rearrangement of any facilities or Lines determined to interfere with the construction. The Contractor must cooperate fully with any telecommunications company(ies) in performing such rearrangements.

(c) Failure to mark or identify these Lines will be sufficient cause for BNSF's engineering representative (Jeffery Stiver (509-536-2594)) to stop construction at no cost to the Agency or BNSF until these items are completed.

(d) In addition to the liability terms contained elsewhere in this Agreement, the Contractor hereby indemnifies, defends and holds harmless BNSF for, from and against all cost, liability, and expense whatsoever (including, without limitation, attorney's fees and court costs and expenses) arising out of or in any way contributed to by any act or omission of Contractor, its subcontractors, agents and/or employees that cause or in any way or degree contribute to (1) any damage to or destruction of any Lines by Contractor, and/or its subcontractors, agents and/or employees, on BNSF's property or within BNSF's right-of-way, (2) any injury to or death of any person employed by or on behalf of any telecommunications company, and/or its contractor, agents and/or employees, on BNSF's property or within BNSF's right-of-way, and/or (3) any claim or cause of action for alleged loss of profits or revenue by, or loss of service by a customer or user of such telecommunication company(ies). **THE LIABILITY ASSUMED BY CONTRACTOR WILL NOT BE AFFECTED BY THE FACT, IF IT IS A**

INFORMATIONAL COPY ONLY, NOT FOR BIDDING PURPOSES

FACT, THAT THE DAMAGE, DESTRUCTION, INJURY, DEATH, CAUSE OF ACTION OR CLAIM WAS OCCASIONED BY OR CONTRIBUTED TO BY THE NEGLIGENCE OF BNSF, ITS AGENTS, SERVANTS, EMPLOYEES OR OTHERWISE, EXCEPT TO THE EXTENT THAT SUCH CLAIMS ARE PROXIMATELY CAUSED BY THE INTENTIONAL MISCONDUCT OR SOLE NEGLIGENCE OF BNSF.

It is mutually negotiated between the parties that the indemnification obligation shall include all claims brought by Contractor's employees against BNSF, its agents, servants, employees or otherwise, and Provider expressly waives its immunity under the industrial insurance act (RCW Title 51) and assumes potential liability for all actions brought by its employees.

13. Agency must require compliance with the obligations set forth in this agreement, including Exhibit C and Exhibit C-1, and incorporate in each prime contract for construction of the Project, or the specifications therefor (i) the provisions set forth in Article III and IV; and (ii) the provisions set forth in Exhibit C, Exhibit C-I, and Exhibit F attached hereto and by reference made a part hereof.

14. Except as otherwise provided below in this Section 13, all construction work performed hereunder by Agency for the Project will be pursuant to a contract or contracts to be let by Agency, and all such contracts must include the following:

(a) All work performed under such contract or contracts within the limits of BNSF's right-of-way must be performed in a good and workmanlike manner in accordance with plans and specifications approved by BNSF;

(b) Changes or modifications during construction that affect safety or BNSF operations must be subject to BNSF's approval;

(c) No work will be commenced within BNSF's right-of-way until each of the prime contractors employed in connection with said work must have (i) executed and delivered to BNSF an agreement in the form of Exhibit C-I, and (ii) delivered to and secured BNSF's approval of the required insurance; and

(d) To facilitate scheduling for the Project, Agency shall have its contractor give BNSF's representative Jeffery Stiver (509-536-2594) two (2) weeks advance notice of the proposed times and dates for work windows. BNSF and Agency's contractor will establish mutually agreeable work windows for the Project. BNSF has the right at any time to revise or change the work windows, due to train operations or service obligations. BNSF will

INFORMATIONAL COPY ONLY, NOT FOR BIDDING PURPOSES

not be responsible for any additional costs and expenses resulting from a change in work windows. Additional costs and expenses resulting from a change in work windows shall be accounted for in the contractor's expenses for the Project.

(e) The plans and specifications for the Project must be in compliance with the Bridge Requirements set forth on Exhibit F, attached to this Agreement and incorporated herein.

15. Agency must advise the appropriate BNSF Manager of Public Projects, in writing, of the completion date of the Project within thirty (30) days after such completion date. Additionally, Agency must notify BNSF's Manager of Public Projects, in writing, of the date on which Agency and/or its Contractor will meet with BNSF for the purpose of making final inspection of the Project.

16. **TO THE FULLEST EXTENT PERMITTED BY THE LAWS OF THE STATE OF WASHINGTON, AGENCY HEREBY RELEASES, INDEMNIFIES, DEFENDS AND HOLDS HARMLESS BNSF, ITS AFFILIATED COMPANIES, PARTNERS, SUCCESSORS, ASSIGNS, LEGAL REPRESENTATIVES, OFFICERS, DIRECTORS, SHAREHOLDERS, EMPLOYEES AND AGENTS FOR, FROM AND AGAINST ANY AND ALL CLAIMS, LIABILITIES, FINES, PENALTIES, COSTS, DAMAGES, LOSSES, LIENS, CAUSES OF ACTION, SUITS, DEMANDS, JUDGMENTS AND EXPENSES (INCLUDING, WITHOUT LIMITATION, COURT COSTS AND ATTORNEYS' FEES) OF ANY NATURE, KIND OR DESCRIPTION OF ANY PERSON (INCLUDING, WITHOUT LIMITATION, THE EMPLOYEES OF THE PARTIES HERETO) OR ENTITY DIRECTLY OR INDIRECTLY ARISING OUT OF, RESULTING FROM OR RELATED TO (IN WHOLE OR IN PART) (I) THE USE, OCCUPANCY OR PRESENCE OF AGENCY, ITS CONTRACTORS, SUBCONTRACTORS, EMPLOYEES OR AGENTS IN, ON, OR ABOUT THE CONSTRUCTION SITE, (II) THE PERFORMANCE, OR FAILURE TO PERFORM BY THE AGENCY, ITS CONTRACTORS, SUBCONTRACTORS, EMPLOYEES, OR AGENTS, ITS WORK OR ANY OBLIGATION UNDER THIS AGREEMENT, (III) THE SOLE OR CONTRIBUTING ACTS OR OMISSIONS OF AGENCY, ITS CONTRACTORS, SUBCONTRACTORS, EMPLOYEES, OR AGENTS IN, ON, OR ABOUT THE CONSTRUCTION SITE, (IV) AGENCY'S BREACH OF THE TEMPORARY CONSTRUCTION LICENSE OR EASEMENT GRANTED TO AGENCY PURSUANT TO ARTICLE II OF THIS AGREEMENT, (V) ANY RIGHTS OR INTERESTS GRANTED TO AGENCY PURSUANT TO THE TEMPORARY CONSTRUCTION LICENSE OR EASEMENT DISCUSSED IN ARTICLE II OF THIS AGREEMENT, (VI) AGENCY'S OCCUPATION AND USE OF BNSF'S PROPERTY OR RIGHT-OF-WAY, INCLUDING, WITHOUT LIMITATION, SUBSEQUENT MAINTENANCE OF THE STRUCTURE BY AGENCY, OR (VII) AN ACT OR OMISSION OF AGENCY OR ITS OFFICERS, AGENTS, INVITEES, EMPLOYEES OR CONTRACTORS OR ANYONE DIRECTLY OR INDIRECTLY EMPLOYED BY ANY OF THEM, OR ANYONE THEY CONTROL OR EXERCISE CONTROL OVER. THE LIABILITY ASSUMED BY AGENCY WILL NOT BE AFFECTED BY THE FACT, IF IT IS A FACT, THAT THE DAMAGE,**

INFORMATION ONLY - NOT FOR BIDDING PURPOSES

DESTRUCTION, INJURY OR DEATH WAS OCCASIONED BY OR CONTRIBUTED TO BY THE NEGLIGENCE OF BNSF, ITS AGENTS, SERVANTS, EMPLOYEES OR OTHERWISE, EXCEPT TO THE EXTENT THAT SUCH CLAIMS ARE PROXIMATELY CAUSED BY THE INTENTIONAL MISCONDUCT OR SOLE NEGLIGENCE OF BNSF.

It is mutually negotiated between the parties that the indemnification obligation shall include all claims brought by Agency's employees against BNSF, its agents, servants, employees or otherwise, and Agency expressly waives its immunity under the industrial insurance act (RCW Title 51) and assumes potential liability for all actions brought by its employees.

17. Agency must give BNSF's Manager of Public Projects written notice to proceed ("**Notice to Proceed**") with the railroad work after receipt of necessary funds for the Project. BNSF will not begin the railroad work (including, without limitation, procurement of supplies, equipment or materials) until written notice to proceed is received from Agency.

ARTICLE IV) JOINT OBLIGATIONS

IN CONSIDERATION of the premises, the parties hereto mutually agree to the following:

1. All work contemplated in this Agreement must be performed in a good and workmanlike manner and each portion must be promptly commenced by the party obligated hereunder to perform the same and thereafter diligently prosecuted to conclusion in its logical order and sequence. Furthermore, any changes or modifications during construction which affect BNSF will be subject to BNSF's written approval prior to the commencement of any such changes or modifications from the Jeffery Stiver (509-536-2594).

2. The work hereunder must be done in accordance with the Bridge Requirements set forth on Exhibit F and the detailed plans and specifications approved by BNSF.

3. Agency must require its contractor(s) to reasonably adhere to the Project's construction schedule for all Project work. The parties hereto mutually agree that BNSF's failure to complete the railroad work in accordance with the construction schedule due to inclement weather or unforeseen railroad emergencies will not constitute a breach of this Agreement by BNSF and will not subject BNSF to any liability. Regardless of the requirements of the construction schedule, BNSF reserves the right to reallocate the labor forces assigned to complete the railroad work in the event of an emergency to provide for the immediate restoration of railroad operations of either BNSF or its related railroads, or to protect persons or property on or near any BNSF owned property. BNSF will not be liable for any additional costs or expenses resulting from any such reallocation of its labor forces. The parties mutually agree that any reallocation of labor forces by BNSF pursuant to this provision and any direct or

INFORMATIONAL COPY ONLY, NOT FOR BIDDING PURPOSES

indirect consequences or costs resulting from any such reallocation will not constitute a breach of this Agreement by BNSF.

4. BNSF will have the right to stop construction work on the Project if any of the following events take place: (i) Agency (or any of its contractors) performs the Project work in a manner contrary to the plans and specifications approved by BNSF; (ii) Agency (or any of its contractors), in BNSF's opinion, prosecutes the Project work in a manner that is hazardous to BNSF property, facilities or the safe and expeditious movement of railroad traffic; (iii) the insurance described in the attached Exhibit C-1 is canceled during the course of the Project; or (iv) Agency fails to pay BNSF for the Temporary Construction License or the Easement pursuant to Article II, Section 1 of this Agreement. The work stoppage will continue until all necessary actions are taken by Agency or its contractor to rectify the situation to the satisfaction of BNSF's Division Engineer or until proof of additional insurance has been delivered to and accepted by BNSF. In the event of a breach of (i) this Agreement, (ii) the Temporary Construction License, or (iii) the Easement, BNSF may immediately terminate the Temporary Construction License or the Easement. Any such work stoppage under this provision will not give rise to any liability on the part of BNSF. BNSF's right to stop the work is in addition to any other rights BNSF may have including, but not limited to, actions or suits for damages or lost profits. In the event that BNSF desires to stop construction work on the Project, BNSF agrees to immediately notify the following individual via email:

Jeff Tincher
jtincher@grantcountywa.gov

5. Agency must supervise and inspect the operations of all Agency contractors to ensure compliance with the plans and specifications approved by BNSF, the terms of this Agreement and all safety requirements of BNSF. If BNSF determines that proper supervision and inspection are not being performed by Agency personnel at any time during construction of the Project, BNSF has the right to stop construction (within or adjacent to its operating right-of-way). Construction of the Project will not proceed until Agency corrects the situation to BNSF's reasonable satisfaction. If BNSF feels the situation is not being corrected in an expeditious manner, BNSF will immediately notify Jeff Tincher to take appropriate action.

6. BNSF will contribute $74,928.30 (**hereinafter referred to as "BNSF's Share")** towards the total actual costs of the Project. BNSF's Share will be based on the total estimated actual cost of construction for the Project as presently estimated to be $749,283.00 more particularly described (together with BNSF's Share) on Exhibit G attached hereto and incorporated herein.

7. Pursuant to this section and Article II, Section 6 herein, Agency must reimburse BNSF in full for the actual costs of all work performed by BNSF under this Agreement

INFORMATIONAL COPY ONLY NOT FOR BIDDING PURPOSES

(including taxes, such as applicable sales and use taxes, business and occupation taxes, and similar taxes), less BNSF's Share as set forth in Article IV, Section 6 herein. BNSF's Share must be paid upon completion of the Project.

8. All expenses detailed in statements sent to Agency pursuant to Article II, Section 6 herein will comply with the terms and provisions of the Title 23 U.S. Code, Title 23 Code of Federal Regulations, and the Federal-Aid Policy Guide, U.S. Department of Transportation, as amended from time to time, which manual is hereby incorporated into and made a part of this Agreement by reference. The parties mutually agree that BNSF's preliminary engineering, design, and contract preparation costs described in Article II, Section 2 herein are part of the costs of the Project even though such work may have preceded the date of this Agreement.

9. The parties mutually agree that neither construction activities for the Project, nor future maintenance of the Structure once completed, will be permitted during the fourth quarter of each calendar year. Emergency work will be permitted only upon prior notification to BNSF's Network Operations Center (telephone number: 800 832-5452). The parties hereto mutually understand and agree that trains cannot be subjected to delay during this time period.

10. Subject to the restrictions imposed by Article IV, Section 9 above, the construction of the Project will not commence until Agency gives BNSF's Manager of Public Projects thirty (30) days prior written notice of such commencement. The commencement notice will reference D.O.T. Crossing No. 065807P and must state the time that construction activities will begin.

11. In addition to the terms and conditions set forth elsewhere in this Agreement, including, but not limited to, the terms and conditions stated in Exhibit F, BNSF and Agency agree to the following terms upon completion of construction of the Project:

(a) Agency will own and maintain, at its sole cost and expense, the Structure, the highway approaches, and appurtenances thereto, lighting, drainage and any access roadways to BNSF gates installed pursuant to this Agreement. BNSF may, at its option, perform maintenance on the Structure in order to avoid conflicts with train operations. BNSF will notify Agency prior to performing any such maintenance on the Structure. In the event such maintenance involves emergency repairs, BNSF will notify Agency at its earliest opportunity. Agency must fully reimburse BNSF for the costs of maintenance performed by BNSF pursuant to this subsection.

(b) Agency must, at Agency's sole cost and expense, keep the Structure painted and free from graffiti.

(c) Agency must provide BNSF with any and all necessary permits and maintain roadway traffic controls, at no cost to BNSF, whenever requested

INFORMATIONAL COPY ONLY, NOT FOR BIDDING PURPOSES

by BNSF to allow BNSF to inspect the Structure or to make emergency repairs thereto.

(d) It is expressly understood by Agency and BNSF that any right to install utilities will be governed by a separate permit or license agreement between the parties hereto.

(e) Agency must keep the Structure and surrounding areas clean and free from birds, pigeons, scavengers, vermin, creatures and other animals.

(f) If Agency (including its contractors and agents) or BNSF, on behalf of Agency, performs (i) alterations or modifications to the Structure, or (ii) any maintenance or other work on the Structure with heavy tools, equipment or machinery at ground surface level horizontally within 25'-0" of the centerline of the nearest track, or (iii) any maintenance or other work outside the limits of the deck of the Structure vertically above the top of the rail, then Agency or its contractors and/or agents must procure and maintain the following insurance coverage, which may be changed from time to time:

Railroad Protective Liability insurance naming only ***BNSF*** as the Insured with coverage of at least $5,000,000 per occurrence and $10,000,000 in the aggregate. The policy shall be issued on a standard ISO form CG 00 35 12 04 and include the following:

- Endorsed to include the Pollution Exclusion Amendment
- Endorsed to include the Limited Seepage and Pollution Endorsement.
- Endorsed to remove any exclusion for punitive damages.
- Endorsed to include Evacuation Expense Coverage Endorsement.
- No other endorsements restricting coverage may be added.
- The original policy must be provided to ***BNSF*** prior to performing any work or services under this Agreement
- Definition of "Physical Damage to Property" shall be endorsed to read: "means direct and accidental loss of or damage to all property owned by any named insured and all property in any named insured' care, custody, and control arising out of the acts or omissions of the contractor named on the Declarations.

As used in this paragraph, "***BNSF***" means "Burlington Northern Santa Fe, LLC", "BNSF RAILWAY COMPANY" and the subsidiaries, successors, assigns and affiliates of each.

In lieu of providing a Railroad Protective Liability Policy, Agency may participate in BNSF's Blanket Railroad Protective Liability Insurance

INFORMATIONAL COPY ONLY, NOT FOR BIDDING PURPOSES

Policy if available to Agency or its contractors. The limits of coverage are the same as above.

12. Agency hereby grants to BNSF, at no cost or expense to BNSF, a permanent right of access from Agency property to BNSF tracks for maintenance purposes.

13. Agency must provide one set of as built plans (prepared in **English Units)** to BNSF, as well as one set of computer diskettes containing as built CAD drawings of the Structure and identifying the software used for the CAD drawings. The "as built plans" must comply with the Bridge Requirements set forth on Exhibit F and depict all information in BNSF engineering stationing and mile post pluses. The "as built plans" must also include plan and profile, structural bridge drawings and specifications, and drainage plans. All improvements and facilities must be shown.

14. Subject to the restrictions imposed by Article IV, Section 9 above and in accordance with the requirements of Article II, Section 9 above, Agency must notify and obtain prior authorization from BNSF's Manager of Public Projects before entering BNSF's right-of-way for **INSPECTION OR MAINTENANCE** purposes, and the BNSF Manager of Public Projects will determine if flagging is required. If the construction work hereunder is contracted, Agency must require its prime contractor(s) to comply with the obligations set forth in Exhibit C and Exhibit C-1, as the same may be revised from time to time. Agency will be responsible for its contractor(s) compliance with such obligations.

15. In the event that BNSF shall deem it necessary or desirable in the future, in the performance of its duty as a common carrier, to raise or lower the grade or change the alignment of its tracks or to lay additional track or tracks or to build other facilities in connection with the operation of its railroad, BNSF shall, at its expense, have full right to make such changes or additions, provided such changes or additions do not change or alter the Structure herein proposed to be constructed and provided further, however, that should it become necessary or desirable in the future to change, alter, widen or reconstruct the Structure to accommodate railroad projects, the cost of such work, including any cost incidental to alteration of railroad or highway facilities made necessary by the alteration of the Structure shall be the sole responsibility of Agency.

16. Agency may, at Agency's sole expense, alter or reconstruct the highway components of the Structure if necessary or desirable, due to traffic conditions or pedestrian or other recreational traffic, provided, however, that any such alteration or reconstruction must receive BNSF's prior written approval as evidenced by either a supplement to this Agreement, or execution of a new agreement that provides for the termination of this Agreement. Furthermore, any alteration or reconstruction of the highway components of the Structure will be covered by a Commission Order.

17. Any books, papers, records and accounts of the parties hereto relating to the work hereunder or the costs or expenses for labor and material connected with the

INFORMATIONAL COPY ONLY, NOT FOR BIDDING PURPOSES

construction will at all reasonable times be open to inspection and audit by the agents and authorized representatives of the parties hereto, as well as the State of Washington and the Federal Highway Administration, for a period of one (1) year from the date of the final BNSF invoice under this Agreement.

18. The covenants and provisions of this Agreement are binding upon and inure to the benefit of the successors and assigns of the parties hereto. Notwithstanding the preceding sentence, neither party hereto may assign any of its rights or obligations hereunder without the prior written consent of the other party.

19. In the event construction of the Project does not commence within 18 months of the Effective Date, this Agreement will become null and void.

20. Neither termination nor expiration of this Agreement will release either party from any liability or obligation under this Agreement, whether of indemnity or otherwise, resulting from any acts, omissions or events happening prior to the date of termination or expiration.

21. This agreement is governed by the laws of the State of Washington. If any portion of this Agreement is declared invalid or unenforceable, the remaining provisions shall remain in full force and effect.

22. This Agreement (including exhibits and other documents, manuals, etc. incorporated herein) is the full and complete agreement between BNSF and Agency with respect to the subject matter herein and supersedes any and all other prior agreements between the parties hereto.

23. Any notice provided for herein or concerning this Agreement must be in either hard copy or digital pdf format and will be deemed sufficiently given when sent by email, to the parties at the following addresses:

BNSF Railway Company:

BNSF's Manager of Public Projects
Richard Wagner
Richard.Wagner@BNSF.com

Agency:

Jeff Tincher
jtincher@grantcountywa.gov

INFORMATIONAL COPY ONLY NOT FOR BIDDING PURPOSES

IN WITNESS WHEREOF, the parties hereto have caused this Agreement to be executed and attested by its duly qualified and authorized officials as of the day and year first above written.

BNSF RAILWAY COMPANY

By: Richard W Weaver

Printed Name: ~~Steve M Anderson~~ Richard W Weaver

Title: ~~VP Engineering~~ MGR Public Projects NW Division

WITNESS:

_____

AGENCY

COUNTY OF GRANT, WASHINGTON

By: BOARD OF COUNTY COMMISSIONERS

Carolann Swartz - Chair

Richard Stevens - Member

Cindy Carter - Member

Printed Name: Jeff Tincher

Title: Director of Public Works / County Road Engineer

SEAL
THE BOARD OF COUNTY COMMISSIONERS GRANT COUNTY WASHINGTON

WITNESS:

INFORMATIONAL COPY ONLY, NOT FOR BIDDING PURPOSES

EXHIBIT "A"

Staubach Tracking TI#:
B&W Proj. No.: 012196.003
MAP REFERENCE:
Sta. - -
R/W - r62426

Scale: 1"= 100'+/-

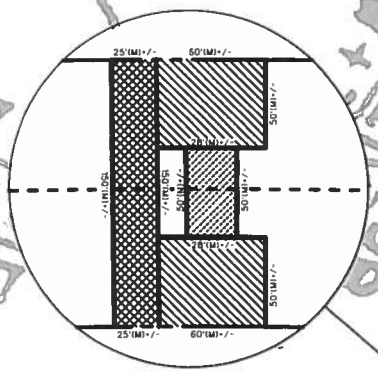

MP 1625.02
ES 156+02

PROPERTY LINE

PROPERTY LINE

Pcl 81

75'

75'

To: Wenatchee

To: Latah Jct.

This map used by BNSF RAILWAY COMPANY in the ordinary course of business, but it is subject to audit and should be used only with the expressed understanding the BNSF make no representations whatsoever about the quality, accuracy, errors or omissions relating to this map.

To: Grant County

Near: Trinidad
Grant County
Washington

Legend:
- Permanent Easement
- Aerial Easement
- Temporary Construction Easement

MEASUREMENTS BASED ON PROVIDED SURVEYS
(S) MEASUREMENTS TAKEN OFF SURVEY
(M) MEASUREMENT

GN RY
WA-03
12

Northwest Division
Columbia River Sub. - L.S. 0037-6
Val. Sec. 51003
GN RY WA-03, Map 12
Sec. 5, T20N, R23E WILLM
August 4, 2014
M.P. 1625.02 JNC

DRAWING NO. 3-61596

INFORMATIONAL COPY ONLY, NOT FOR BIDDING PURPOSES

EXHIBIT "C"

CONTRACTOR REQUIREMENTS

1.01 General:

- **1.01.01** The Contractor must cooperate with **BNSF RAILWAY COMPANY**, hereinafter referred to as "**Railway**" where work is over or under on or adjacent to Railway property and/or right-of-way, hereafter referred to as "Railway Property", during the construction of Trinidad Bridge Replacement.

- **1.01.02** The Contractor must execute and deliver to the Railway duplicate copies of the Exhibit "C-1" Agreement, in the form attached hereto, obligating the Contractor to provide and maintain in full force and effect the insurance called for under Section 3 of said Exhibit "C-1". Questions regarding procurement of the Railroad Protective Liability Insurance should be directed to Rosa Martinez at Marsh, USA, 214-303-8519.

- **1.01.03** The Contractor must plan, schedule and conduct all work activities so as not to interfere with the movement of any trains on Railway Property.

- **1.01.04** The Contractor's right to enter Railway's Property is subject to the absolute right of Railway to cause the Contractor's work on Railway's Property to cease if, in the opinion of Railway, Contractor's activities create a hazard to Railway's Property, employees, and/or operations. Railway will have the right to stop construction work on the Project if any of the following events take place: (i) Contractor (or any of its subcontractors) performs the Project work in a manner contrary to the plans and specifications approved by Railway; (ii) Contractor (or any of its subcontractors), in Railway's opinion, prosecutes the Project work in a manner which is hazardous to Railway property, facilities or the safe and expeditious movement of railroad traffic; (iii) the insurance described in the attached Exhibit C-1 is canceled during the course of the Project; or (iv) Contractor fails to pay Railway for the Temporary Construction License or the Easement. The work stoppage will continue until all necessary actions are taken by Contractor or its subcontractor to rectify the situation to the satisfaction of Railway's Division Engineer or until additional insurance has been delivered to and accepted by Railway. In the event of a breach of (i) this Agreement, (ii) the Temporary Construction License, or (iii) the Easement, Railway may immediately terminate the Temporary Construction License or the Easement. Any such work stoppage under this provision will not give rise to any liability on the part of Railway. Railway's right to stop the work is in addition to any other rights Railway may have including, but not limited to, actions or suits for damages or lost profits. In the event that Railway desires to stop construction work on the Project, Railway agrees to immediately notify the following individual in writing:

INFORMATIONAL COPY ONLY, NOT FOR BIDDING PURPOSES

Jeff Tincher
jtincher@grantcountywa.gov

- **1.01.05** The Contractor is responsible for determining and complying with all Federal, State and Local Governmental laws and regulations, including, but not limited to environmental laws and regulations (including but not limited to the Resource Conservation and Recovery Act, as amended; the Clean Water Act, the Oil Pollution Act, the Hazardous Materials Transportation Act, CERCLA), and health and safety laws and regulations. The Contractor hereby indemnifies, defends and holds harmless Railway for, from and against all fines or penalties imposed or assessed by Federal, State and Local Governmental Agencies against the Railway which arise out of Contractor's work under this Agreement.

- **1.01.06** The Contractor must notify **(Agency) at: 509-754-6082** and Railway's Manager Public Projects, telephone number **206.625.6152** at least thirty (30) calendar days before commencing any work on Railway Property. Contractor's notification to Railway must refer to Railway's file **BF10006809**.

- **1.01.07** For any bridge demolition and/or falsework above any tracks or any excavations located with any part of the excavations located within, whichever is greater, twenty-five (25) feet of the nearest track or intersecting a slope from the plane of the top of rail on a 2 horizontal to 1 vertical slope beginning at eleven (11) feet from centerline of the nearest track, both measured perpendicular to center line of track, the Contractor must furnish the Railway five sets of working drawings showing details of construction affecting Railway Property and tracks. The working drawing must include the proposed method of installation and removal of falsework, shoring or cribbing, not included in the contract plans and two sets of structural calculations of any falsework, shoring or cribbing. For all excavation and shoring submittal plans, the current "BNSF-UPRR Guidelines for Temporary Shoring" must be used for determining the design loading conditions to be used in shoring design, and all calculations and submittals must be in accordance with the current "BNSF-UPRR Guidelines for Temporary Shoring". All submittal drawings and calculations must be stamped by a registered professional engineer licensed to practice in the state the project is located. All calculations must take into consideration railway surcharge loading and must be designed to meet American Railway Engineering and Maintenance-of-Way Association (previously known as American Railway Engineering Association) Coopers E-80 live loading standard. All drawings and calculations must be stamped by a registered professional engineer licensed to practice in the state the project is located. The Contractor must not begin work until notified by the Railway that plans have been approved. The Contractor will be required to use lifting devices such as, cranes and/or winches to place or to remove any falsework over Railway's tracks. In no case will the Contractor be relieved of responsibility for results obtained by the implementation of said approved plans.

INFORMATION COPY ONLY NOT FOR BIDDING PURPOSES

- **1.01.08** Subject to the movement of Railway's trains, Railway will cooperate with the Contractor such that the work may be handled and performed in an efficient manner. The Contractor will have no claim whatsoever for any type of damages or for extra or additional compensation in the event his work is delayed by the Railway.

1.02 Contractor Safety Orientation

- **1.02.01 No employee of the Contractor, its subcontractors, agents or invitees may enter Railway Property without first having completed Railway's Engineering Contractor Safety Orientation, found on the web site www.contractororientation.com. The Contractor must ensure that each of its employees, subcontractors, agents or invitees completes Railway's Engineering Contractor Safety Orientation through internet sessions before any work is performed on the Project. Additionally, the Contractor must ensure that each and every one of its employees, subcontractors, agents or invitees possesses a card certifying completion of the Railway Contractor Safety Orientation before entering Railway Property. The Contractor is responsible for the cost of the Railway Contractor Safety Orientation. The Contractor must renew the Railway Contractor Safety Orientation annually. Further clarification can be found on the web site or from the Railway's Representative.**

1.03 Railway Requirements

- **1.03.01** The Contractor must take protective measures as are necessary to keep railway facilities, including track ballast, free of sand, debris, and other foreign objects and materials resulting from his operations. Any damage to railway facilities resulting from Contractor's operations will be repaired or replaced by Railway and the cost of such repairs or replacement must be paid for by the Agency.

- **1.03.02** The Contractor must notify the Railway's **Division Engineer Wesley Pruitt at 509.536.2545** and provide blasting plans to the Railway for review seven (7) calendar days prior to conducting any blasting operations adjacent to or on Railway's Property.

- **1.03.03** The Contractor must abide by the following temporary clearances during construction:

    - 15'-0" Horizontally from centerline of nearest track
    - 21'-6" Vertically above top of rail
    - 27'-0" Vertically above top of rail for electric wires carrying less than 750

INFORMATIONAL COPY ONLY, NOT FOR BIDDING PURPOSES

volts

- 28'-0" Vertically above top of rail for electric wires carrying 750 volts to 15,000 volts
- 30'-0" Vertically above top of rail for electric wires carrying 15,000 volts to 20,000 volts
- 34'-0" Vertically above top of rail for electric wires carrying more than 20,000 volts

- **1.03.04** Upon completion of construction, the following clearances shall be maintained:
  - 25' Horizontally from centerline of nearest track
  - 23' 6" Vertically above top of rail

- **1.03.05** Any infringement within State statutory clearances due to the Contractor's operations must be submitted to the Railway and to the **(Agency)** and must not be undertaken until approved in writing by the Railway, and until the **(Agency)** has obtained any necessary authorization from the State Regulatory Authority for the infringement. No extra compensation will be allowed in the event the Contractor's work is delayed pending Railway approval, and/or the State Regulatory Authority's approval.

- **1.03.06** In the case of impaired vertical clearance above top of rail, Railway will have the option of installing tell-tales or other protective devices Railway deems necessary for protection of Railway operations. The cost of tell-tales or protective devices will be borne by the Agency.

- **1.03.07** The details of construction affecting the Railway's Property and tracks not included in the contract plans must be submitted to the Railway by **(Agency)** for approval before work is undertaken and this work must not be undertaken until approved by the Railway.

- **1.03.08** At other than public road crossings, the Contractor must not move any equipment or materials across Railway's tracks until permission has been obtained from the Railway. The Contractor must obtain a "Temporary Construction Crossing Agreement" from the Railway prior to moving his equipment or materials across the Railways tracks. The temporary crossing must be gated and locked at all times when not required for use by the Contractor. The temporary crossing for use of the Contractor will be constructed and, at the completion of the project, removed at the expense of the Contractor.

- **1.03.09** Discharge, release or spill on the Railway Property of any hazardous substances, oil, petroleum, constituents, pollutants, contaminants, or any hazardous waste is prohibited and Contractor must immediately notify the Railway's Resource Operations Center at 1(800) 832-5452, of any discharge, release or spills in excess

INFORMATIONAL COPY ONLY NOT FOR BIDDING PURPOSES

of a reportable quantity. Contractor must not allow Railway Property to become a treatment, storage or transfer facility as those terms are defined in the Resource Conservation and Recovery Act or any state analogue.

- **1.03.10** The Contractor upon completion of the work covered by this contract, must promptly remove from the Railway's Property all of Contractor's tools, equipment, implements and other materials, whether brought upon said property by said Contractor or any Subcontractor, employee or agent of Contractor or of any Subcontractor, and must cause Railway's Property to be left in a condition acceptable to the Railway's representative.

1.04 Contractor Roadway Worker on Track Safety Program and Safety Action Plan:

- **1.04.01** Each Contractor that will perform work within 25 feet of the centerline of a track must develop and implement a Roadway Worker Protection/On Track Safety Program and work with Railway Project Representative to develop an on track safety strategy as described in the guidelines listed in the on track safety portion of the Safety Orientation. This Program must provide Roadway Worker protection/on track training for all employees of the Contractor, its subcontractors, agents or invitees. This training is reinforced at the job site through job safety briefings. Additionally, each Contractor must develop and implement the Safety Action Plan, as provided for on the web site **www.contractororientation.com**, which will be made available to Railway prior to commencement of any work on Railway Property. During the performance of work, the Contractor must audit its work activities. The Contractor must designate an on-site Project Supervisor who will serve as the contact person for the Railway and who will maintain a copy of the Safety Action Plan, safety audits, and Material Safety Datasheets (MSDS), at the job site.

- **1.04.02** Contractor shall have a background investigation performed on all of its employees, subcontractors and agents who will be performing any services for Railroad under this Agreement which are determined by Railroad in its sole discretion **a)** to be on Railroad's property, or **b)** that require access to Railroad Critical Infrastructure, Railroad Critical Information Systems, Railroad's Employees, Hazardous Materials on Railroad's property or is being transported by or otherwise in the custody of Railroad, or Freight in Transit involving Railroad.

  The required background screening shall at a minimum meet the rail industry background screening criteria defined by the e-RAILSAFE Program as outlined at http://www.e-railsafe.com, in addition to any other applicable regulatory requirements.

INFORMATIONAL COPY ONLY - NOT FOR BIDDING PURPOSES

Contractor shall obtain written consent from all its employees, subcontractors or agents screened in compliance with the e-RAILSAFE Program to participate in the Program on their behalf and to release completed background information to Railroad's designee. Contractor shall be subject to periodic audit to ensure compliance.

Contractor subject to the e-RAILSAFE Program hereunder shall not permit any of its employees, subcontractors or agents to perform services hereunder who are not first approved under e-RAILSAFE Program standards. Railroad shall have the right to deny entry onto its premises or access as described in this section above to any of Contractor's employees, subcontractors or agents who do not display the authorized identification badge issued by a background screening service meeting the standards set forth in the e-RAILSAFE Program, or who in Railroad's opinion, which may not be unreasonable, may pose a threat to the safety or security of Railroad's operations, assets or personnel.

Contractors shall be responsible for ensuring that its employees, subcontractors and agents are United States citizens or legally working in the United States under a lawful and appropriate work VISA or other work authorization.

1.05 Railway Flagger Services:

- **1.05.01** The Contractor must give Railway's **Roadmaster (telephone 509.664.2223)** a minimum of thirty (30) calendar days advance notice when flagging services will be required so that the Roadmaster can make appropriate arrangements (i.e., bulletin the flagger's position). If flagging services are scheduled in advance by the Contractor and it is subsequently determined by the parties hereto that such services are no longer necessary, the Contractor must give the Roadmaster five (5) working days advance notice so that appropriate arrangements can be made to abolish the position pursuant to union requirements.

- **1.05.02** Unless determined otherwise by Railway's Project Representative, Railway flagger will be required and furnished when Contractor's work activities are located over, under and/or within twenty-five (25) feet measured horizontally from centerline of the nearest track and when cranes or similar equipment positioned beyond 25-feet from the track centerline could foul the track in the event of tip over or other catastrophic occurrence, but not limited thereto for the following conditions:

    - **1.05.02a** When, upon inspection by Railway's Representative, other conditions warrant.

    - **1.05.02b** When any excavation is performed below the bottom of tie elevation, if,

INFORMATIONAL COPY ONLY, NOT FOR BIDDING PURPOSES

in the opinion of Railway's representative, track or other Railway facilities may be subject to movement or settlement.

- **1.05.02c** When work in any way interferes with the safe operation of trains at timetable speeds.

- **1.05.02d** When any hazard is presented to Railway track, communications, signal, electrical, or other facilities either due to persons, material, equipment or blasting in the vicinity.

- **1.05.02e** Special permission must be obtained from the Railway before moving heavy or cumbersome objects or equipment which might result in making the track impassable.

- **1.05.03** Flagging services will be performed by qualified Railway flaggers.

  - **1.05.03a** Flagging crew generally consists of one employee. However, additional personnel may be required to protect Railway Property and operations, if deemed necessary by the Railways Representative.

  - **1.05.03b** Each time a flagger is called, the minimum period for billing will be the eight (8) hour basic day.

  - **1.05.03c** The cost of flagger services provided by the Railway will be borne by **(Agency)**. The estimated cost for one (1) flagger is approximately between $800.00-$1,600.00 for an eight (8) hour basic day with time and one-half or double time for overtime, rest days and holidays. The estimated cost for each flagger includes vacation allowance, paid holidays, Railway and unemployment insurance, public liability and property damage insurance, health and welfare benefits, vehicle, transportation, meals, lodging, radio, equipment, supervision and other costs incidental to performing flagging services. Negotiations for Railway labor or collective bargaining agreements and rate changes authorized by appropriate Federal authorities may increase actual or estimated flagging rates. **THE FLAGGING RATE IN EFFECT AT THE TIME OF PERFORMANCE BY THE CONTRACTOR HEREUNDER WILL BE USED TO CALCULATE THE ACTUAL COSTS OF FLAGGING PURSUANT TO THIS PARAGRAPH.**

  - **1.05.03d** The average train traffic on this route is 18 freight trains per 24-hour period at a timetable speed 45 MPH and 2 passenger trains at a timetable speed of 50 MPH.

INFORMATIONAL COPY ONLY, NOT FOR BIDDING PURPOSES

1.06 Contractor General Safety Requirements

- **1.06.01** Work in the proximity of railway track(s) is potentially hazardous where movement of trains and equipment can occur at any time and in any direction. All work performed by contractors within 25 feet of any track must be in compliance with FRA Roadway Worker Protection Regulations.

- **1.06.02** Before beginning any task on Railway Property, a thorough job safety briefing must be conducted with all personnel involved with the task and repeated when the personnel or task changes. If the task is within 25 feet of any track, the job briefing must include the Railway's flagger, as applicable, and include the procedures the Contractor will use to protect its employees, subcontractors, agents or invitees from moving any equipment adjacent to or across any Railway track(s).

- **1.06.03** Workers must not work within 25 feet of the centerline of any track without an on track safety strategy approved by the Railway's Project Representative. When authority is provided, every contractor employee must know: (1) who the Railway flagger is, and how to contact the flagger, (2) limits of the authority, (3) the method of communication to stop and resume work, and (4) location of the designated places of safety. Persons or equipment entering flag/work limits that were not previously job briefed, must notify the flagger immediately, and be given a job briefing when working within 25 feet of the center line of track.

- **1.06.04** When Contractor employees are required to work on the Railway Property after normal working hours or on weekends, the Railway's representative in charge of the project must be notified. A minimum of two employees must be present at all times.

- **1.06.05** Any employees, agents or invitees of Contractor or its subcontractors under suspicion of being under the influence of drugs or alcohol, or in the possession of same, will be removed from the Railway's Property and subsequently released to the custody of a representative of Contractor management. Future access to the Railway's Property by that employee will be denied.

- **1.06.06** Any damage to Railway Property, or any hazard noticed on passing trains must be reported immediately to the Railway's representative in charge of the project. Any vehicle or machine which may come in contact with track, signal equipment, or structure (bridge) and could result in a train derailment must be reported immediately to the Railway representative in charge of the project and to the Railway's Resource Operations Center at 1(800) 832-5452. Local emergency numbers are to be obtained from the Railway representative in charge of the project prior to the start of any work and must be posted at the job site.

- **1.06.07** For safety reasons, all persons are prohibited from having pocket knives,

INFORMATIONAL COPY ONLY, NOT FOR BIDDING PURPOSES

firearms or other deadly weapons in their possession while working on Railway's Property.

- **1.06.08** All personnel protective equipment (PPE) used on Railway Property must meet applicable OSHA and ANSI specifications. Current Railway personnel protective equipment requirements are listed on the web site, www.contractororientation.com, however, a partial list of the requirements include: a) safety glasses with permanently affixed side shields (no yellow lenses); b) hard hats; c) safety shoe with: hardened toes, above-the-ankle lace-up and a defined heel; and d) high visibility retro-reflective work wear. The Railway's representative in charge of the project is to be contacted regarding local specifications for meeting requirements relating to hi-visibility work wear. Hearing protection, fall protection, gloves, and respirators must be worn as required by State and Federal regulations. **(NOTE – Should there be a discrepancy between the information contained on the web site and the information in this paragraph, the web site will govern.)**

- **1.06.09 THE CONTRACTOR MUST NOT PILE OR STORE ANY MATERIALS, MACHINERY OR EQUIPMENT CLOSER THAN 25'-0" TO THE CENTER LINE OF THE NEAREST RAILWAY TRACK. MATERIALS, MACHINERY OR EQUIPMENT MUST NOT BE STORED OR LEFT WITHIN 250 FEET OF ANY HIGHWAY/RAIL AT-GRADE CROSSINGS OR TEMPORARY CONSTRUCTION CROSSING, WHERE STORAGE OF THE SAME WILL OBSTRUCT THE VIEW OF A TRAIN APPROACHING THE CROSSING. PRIOR TO BEGINNING WORK, THE CONTRACTOR MUST ESTABLISH A STORAGE AREA WITH CONCURRENCE OF THE RAILWAY'S REPRESENTATIVE.**

- **1.06.10** Machines or vehicles must not be left unattended with the engine running. Parked machines or equipment must be in gear with brakes set and if equipped with blade, pan or bucket, they must be lowered to the ground. All machinery and equipment left unattended on Railway's Property must be left inoperable and secured against movement. (See internet Engineering Contractor Safety Orientation program for more detailed specifications)

- **1.06.11** Workers must not create and leave any conditions at the work site that would interfere with water drainage. Any work performed over water must meet all Federal, State and Local regulations.

- **1.06.12** All power line wires must be considered dangerous and of high voltage unless informed to the contrary by proper authority. For all power lines the minimum clearance between the lines and any part of the equipment or load must be; 200 KV or below - 15 feet; 200 to 350 KV - 20 feet; 350 to 500 KV - 25 feet; 500 to 750 KV - 35 feet; and 750 to 1000 KV - 45 feet. If capacity of the line is not known, a minimum clearance of 45 feet must be maintained. A person must be designated to

INFORMATIONAL COPY ONLY - NOT FOR BIDDING PURPOSES

observe clearance of the equipment and give a timely warning for all operations where it is difficult for an operator to maintain the desired clearance by visual means.

1.07 Excavation:

- **1.07.01** Before excavating, the Contractor must determine whether any underground pipe lines, electric wires, or cables, including fiber optic cable systems are present and located within the Project work area. The Contractor must determine whether excavation on Railway's Property could cause damage to buried cables resulting in delay to Railway traffic and disruption of service to users. Delays and disruptions to service may cause business interruptions involving loss of revenue and profits. Before commencing excavation, the Contractor must contact **BNSF's Field Engineering Representative (Taylor Smith 206.625.6189).** All underground and overhead wires will be considered HIGH VOLTAGE and dangerous until verified with the company having ownership of the line. **It is the Contractor's responsibility to notify any other companies that have underground utilities in the area and arrange for the location of all underground utilities before excavating.**

- **1.07.02** The Contractor must cease all work and notify the Railway immediately before continuing excavation in the area if obstructions are encountered which do not appear on drawings. If the obstruction is a utility and the owner of the utility can be identified, then the Contractor must also notify the owner immediately. If there is any doubt about the location of underground cables or lines of any kind, no work must be performed until the exact location has been determined. There will be no exceptions to these instructions.

- **1.07.03** All excavations must be conducted in compliance with applicable OSHA regulations and, regardless of depth, must be shored where there is any danger to tracks, structures or personnel.

- **1.07.04** Any excavations, holes or trenches on the Railway's Property must be covered, guarded and/or protected when not being worked on. When leaving work site areas at night and over weekends, the areas must be secured and left in a condition that will ensure that Railway employees and other personnel who may be working or passing through the area are protected from all hazards. All excavations must be back filled as soon as possible.

1.08 Hazardous Waste, Substances and Material Reporting:

- **1.08.01** If Contractor discovers any hazardous waste, hazardous substance, petroleum or other deleterious material, including but not limited to any

INFORMATIONAL COPY ONLY, NOT FOR BIDDING PURPOSES

non-containerized commodity or material, on or adjacent to Railway's Property, in or near any surface water, swamp, wetlands or waterways, while performing any work under this Agreement, Contractor must immediately: (a) notify the Railway's Resource Operations Center at 1(800) 832-5452, of such discovery: (b) take safeguards necessary to protect its employees, subcontractors, agents and/or third parties: and (c) exercise due care with respect to the release, including the taking of any appropriate measure to minimize the impact of such release.

1.09 Personal Injury Reporting

- **1.09.01** The Railway is required to report certain injuries as a part of compliance with Federal Railroad Administration (FRA) reporting requirements. Any personal injury sustained by an employee of the Contractor, subcontractor or Contractor's invitees while on the Railway's Property must be reported immediately (by phone mail if unable to contact in person) to the Railway's representative in charge of the project. The Non-Employee Personal Injury Data Collection Form contained herein is to be completed and sent by Fax to the Railway at 1(817) 352-7595 and to the Railway's Project Representative no later than the close of shift on the date of the injury.

INFORMATIONAL COPY ONLY, NOT FOR BIDDING PURPOSES

BNSF RAILWAY

NON-EMPLOYEE PERSONAL INJURY DATA COLLECTION

(If injuries are in connection with rail equipment accident/incident, highway rail grade crossing accident or automobile accident, ensure that appropriate information is obtained, forms completed and that data entry personnel are aware that injuries relate to that specific event.)

Injured Person Type:

- ☐ Passenger on train (C)
- ☐ Non-employee (N) *(i.e., emp of another railroad, or, non-BNSF emp involved in vehicle accident, including company vehicles)*
- ☐ Contractor/safety sensitive (F)
- ☐ Contractor/non-safety sensitive (G)
- ☐ Volunteer/safety sensitive (H)
- ☐ Volunteer/other non-safety sensitive (I)
- ☐ Non-trespasser (D) - to include highway users involved in highway rail grade crossing accidents who did not go around or through gates
- ☐ Trespasser (E) - to include highway users involved in highway rail grade crossing accidents who went around or through gates
- ☐ Non-trespasser (J) - Off railroad property

If train involved, Train ID: _____

Transmit attached information to Accident/Incident Reporting Center by:
Fax 1-817-352-7595 or by Phone 1-800-697-6736 **or email to:** Accident-Reporting.Center@BNSF.com

Officer Providing Information:

_____ _____ _____
(Name) (Employee No.) (Phone #)

REPORT PREPARED TO COMPLY WITH FEDERAL ACCIDENT REPORTING REQUIREMENTS AND PROTECTED FROM DISCLOSURE PURSUANT TO 49 U.S.C. 20903 AND 83 U.S.C. 490

INFORMATIONAL COPY ONLY, NOT FOR BIDDING PURPOSES

NON-EMPLOYEE PERSONAL INJURY DATA COLLECTION

INFORMATION REQUIRED TO BE COLLECTED PURSUANT TO FEDERAL REGULATION. IT SHOULD BE USED FOR COMPLIANCE WITH FEDERAL REGULATIONS ONLY AND IT IS NOT INTENDED TO PRESUME ACCEPTANCE OF RESPONSIBILITY OR LIABILITY.

1. Accident City/St: _____ 2. Date: _____ Time: _____

County: _____ 3. Temperature: _____ 4. Weather: _____
(if non BNSF location)

Mile Post / Line Segment: _____

5. Driver's License No (and state) or other ID: _____ **SSN (required):** _____

6. Name (last, first, mi): _____

7. Address: _____ City: _____ St: _____ Zip: _____

8. Date of Birth: _____ and/or Age: _____ Gender: _____
(if available)

Phone Number: _____ Employer: _____

9. Injury: _____ 10. Body Part: _____
(i.e., Laceration, etc.) (i.e., Hand, etc.)

11. Description of Accident (To include location, action, result, etc.): _____

_____

_____

_____

12. Treatment:

- ☐ First Aid Only _____
- ☐ Required Medical Treatment _____
- ☐ Other Medical Treatment _____

13. Dr. Name: _____ Date: _____

14. Dr. Address:
Street: _____ City: _____ St: _____ Zip: _____

15. Hospital Name: _____

16. Hospital Address:
Street: _____ City: _____ St: _____ Zip: _____

17. Diagnosis: _____

REPORT PREPARED TO COMPLY WITH FEDERAL ACCIDENT REPORTING REQUIREMENTS AND PROTECTED FROM DISCLOSURE PURSUANT TO 49 U.S.C. 20903 AND 83 U.S.C. 490

INFORMATIONAL COPY ONLY, NOT FOR BIDDING PURPOSES

INFORMATIONAL COPY ONLY, NOT FOR BIDDING PURPOSES

EXHIBIT "C-1"

Agreement Between
BNSF RAILWAY COMPANY
and the
CONTRACTOR

Railway File: _____

Agency Project: _____

<%Contractor.LegalName%> [Insert contractor's legal name here](hereinafter called "Contractor"), has entered into an agreement (hereinafter called "Agreement") dated _____, 201_, **[***Drafter's Note: insert the date of the contract between the Agency and the Contractor here]** with **Douglas County Washington** for the performance of certain work in connection with the following project: **Trinidad Bridge Replacement**. Performance of such work will necessarily require Contractor to enter **BNSF RAILWAY COMPANY** (hereinafter called "Railway") right of way and property (hereinafter called "Railway Property"). The Agreement provides that no work will be commenced within Railway Property until the Contractor employed in connection with said work for **Douglas County Washington** (i) executes and delivers to Railway an Agreement in the form hereof, and (ii) provides insurance of the coverage and limits specified in such Agreement and Section 3 herein. If this Agreement is executed by a party who is not the Owner, General Partner, President or Vice President of Contractor, Contractor must furnish evidence to Railway certifying that the signatory is empowered to execute this Agreement on behalf of Contractor.

Accordingly, in consideration of Railway granting permission to Contractor to enter upon Railway Property and as an inducement for such entry, Contractor, effective on the date of the Agreement, has agreed and does hereby agree with Railway as follows:

1) RELEASE OF LIABILITY AND INDEMNITY

Contractor hereby waives, releases, indemnifies, defends and holds harmless Railway for all judgments, awards, claims, demands, and expenses (including attorneys' fees), for injury or death to all persons, including Railway's and Contractor's officers and employees, and for loss and damage to property belonging to any person, arising in any manner from Contractor's or any of Contractor's subcontractors' acts or omissions or any work performed on or about Railway's property or right-of-way. **This obligation shall not include such claims, costs, damages, or expenses which may be caused by the sole negligence of Railway or its contractors, agents or employees;**

INFORMATIONAL COPY ONLY - NOT FOR BIDDING PURPOSES

Provided, that if the claims or damages are caused by or result from the concurrent negligence or other acts or omissions of (a) Railway, its contractors, agents or employees and (b) Contractor, its subcontractors, agents or employees, this provision shall be valid and enforceable only to the extent of the negligence of the Contractor, its subcontractors, agents or employees.

It is mutually negotiated between the parties that the indemnification obligation shall include all claims brought by Contractor's employees against Railway, its agents, servants, employees or otherwise, and Contractor expressly waives its immunity under the industrial insurance act (RCW Title 51) and assumes potential liability for all actions brought by its employees.
THE INDEMNIFICATION OBLIGATION ASSUMED BY CONTRACTOR INCLUDES ANY CLAIMS, SUITS OR JUDGMENTS BROUGHT AGAINST RAILWAY UNDER THE FEDERAL EMPLOYEE'S LIABILITY ACT, INCLUDING CLAIMS FOR STRICT LIABILITY UNDER THE SAFETY APPLIANCE ACT OR THE LOCOMOTIVE INSPECTION ACT, WHENEVER SO CLAIMED.

Contractor further agrees, at its expense, in the name and on behalf of Railway, that it will adjust and settle all claims made against Railway, and will, at Railway's discretion, appear and defend any suits or actions of law or in equity brought against Railway on any claim or cause of action arising or growing out of or in any manner connected with any liability assumed by Contractor under this Agreement for which Railway is liable or is alleged to be liable. Railway will give notice to Contractor, in writing, of the receipt or dependency of such claims and thereupon Contractor must proceed to adjust and handle to a conclusion such claims, and in the event of a suit being brought against Railway, Railway may forward summons and complaint or other process in connection therewith to Contractor, and Contractor, at Railway's discretion, must defend, adjust, or settle such suits and protect, indemnify, and save harmless Railway from and against all damages, judgments, decrees, attorney's fees, costs, and expenses growing out of or resulting from or incident to any such claims or suits.

In addition to any other provision of this Agreement, in the event that all or any portion of this Article shall be deemed to be inapplicable for any reason, including without limitation as a result of a decision of an applicable court, legislative enactment or regulatory order, the parties agree that this Article shall be interpreted as requiring Contractor to indemnify Railway to the fullest extent permitted by applicable law.

It is mutually understood and agreed that the assumption of liabilities and indemnification provided for in this Agreement survive any termination of this Agreement.

INFORMATIONAL COPY ONLY, NOT FOR BIDDING PURPOSES

2) TERM

This Agreement is effective from the date of the Agreement until (i) the completion of the project set forth herein, and (ii) full and complete payment to Railway of any and all sums or other amounts owing and due hereunder.

3) INSURANCE

Contractor shall, at its sole cost and expense, procure and maintain during the life of this Agreement the following insurance coverage:

A. Commercial General Liability insurance. This insurance shall contain broad form contractual liability with a combined single limit of a minimum of $5,000,000 each occurrence and an aggregate limit of at least $10,000,000 but in no event less than the amount otherwise carried by the Contractor. Coverage must be purchased on a post 2004 ISO occurrence form or equivalent and include coverage for, but not limit to the following:

- Bodily Injury and Property Damage
- Personal Injury and Advertising Injury
- Fire legal liability
- Products and completed operations

This policy shall also contain the following endorsements, which shall be indicated on the certificate of insurance:

- The definition of insured contract shall be amended to remove any exclusion or other limitation for any work being done within 50 feet of railroad property.
- Waver of subrogation in favor of and acceptable to Railway.
- Additional insured endorsement in favor of and acceptable to Railway.
- Separation of insureds.
- The policy shall be primary and non-contributing with respect to any insurance carried by Railway.

It is agreed that the workers' compensation and employers' liability related exclusions in the Commercial General Liability insurance policy(s) required herein are intended to apply to employees of the policy holder and shall not apply to ***Railway*** employees.

No other endorsements limiting coverage as respects obligations under this Agreement may be included on the policy with regard to the work being performed under this agreement.

INFORMATIONAL COPY ONLY, NOT FOR BIDDING PURPOSES

B. Business Automobile Insurance. This insurance shall contain a combined single limit of at least $1,000,000 per occurrence, and include coverage for, but not limited to the following:

- Bodily injury and property damage
- Any and all vehicles owned, used or hired

The policy shall also contain the following endorsements or language, which shall be indicated on the certificate of insurance:

- Waiver of subrogation in favor of and acceptable to Railway.
- Additional insured endorsement in favor of and acceptable to Railway.
- Separation of insureds.
- The policy shall be primary and non-contributing with respect to any insurance carried by Railway.

C. Workers Compensation and Employers Liability insurance including coverage for, but not limited to:

- Contractor's statutory liability under the worker's compensation laws of the state(s) in which the work is to be performed. If optional under State law, the insurance must cover all employees anyway.
- Employers' Liability (Part B) with limits of at least $500,000 each accident, $500,000 by disease policy limit, $500,000 by disease each employee.

This policy shall also contain the following endorsements or language, which shall be indicated on the certificate of insurance:

- Waiver of subrogation in favor of and acceptable to Railway.

D. Railroad Protective Liability insurance naming only the ***Railway*** as the Insured with coverage of at least $5,000,000 per occurrence and $10,000,000 in the aggregate. The policy Must be issued on a standard ISO form CG 00 35 12 04 and include the following:

- Endorsed to include the Pollution Exclusion Amendment
- Endorsed to include the Limited Seepage and Pollution Endorsement.
- Endorsed to remove any exclusion for punitive damages.
- No other endorsements restricting coverage may be added.
- The original policy must be provided to the ***Railway*** prior to performing any work or services under this Agreement
- Definition of "Physical Damage to Property" shall be endorsed to read: "means direct and accidental loss of or damage to all property owned by any named insured and all property in any named insured' care,

INFORMATIONAL COPY ONLY, NOT FOR BIDDING PURPOSES

custody, and control arising out of the acts or omissions of the contractor named on the Declarations.

In lieu of providing a Railroad Protective Liability Policy, Licensee may participate (if available) in Railway's Blanket Railroad Protective Liability Insurance Policy.

Other Requirements:

Where allowable by law, all policies (applying to coverage listed above) shall contain no exclusion for punitive damages.

Contractor agrees to waive its right of recovery against ***Railway*** for all claims and suits against ***Railway***. In addition, its insurers, through the terms of the policy or policy endorsement, waive their right of subrogation against ***Railway*** for all claims and suits. Contractor further waives its right of recovery, and its insurers also waive their right of subrogation against ***Railway*** for loss of its owned or leased property or property under Contractor's care, custody or control.

Allocated Loss Expense shall be in addition to all policy limits for coverages referenced above.

Contractor is not allowed to self-insure without the prior written consent of ***Railway.*** If granted by ***Railway***, any self-insured retention or other financial responsibility for claims shall be covered directly by Contractor in lieu of insurance. Any and all ***Railway*** liabilities that would otherwise, in accordance with the provisions of this Agreement, be covered by Contractor's insurance will be covered as if Contractor elected not to include a deductible, self-insured retention or other financial responsibility for claims.

Prior to commencing services, Contractor shall furnish to ***Railway*** an acceptable certificate(s) of insurance from an authorized representative evidencing the required coverage(s), endorsements, and amendments. The certificate should be directed to the following address:

BNSF Railway Company
c/o CertFocus
P.O. Box 140528
Kansas City, MO 64114
Toll Free: 877-576-2378
Fax number: 817-840-7487
Email: BNSF@certfocus.com
www.certfocus.com

INFORMATIONAL COPY ONLY NOT FOR BIDDING PURPOSES

Contractor shall notify ***Railway*** in writing at least 30 days prior to any cancellation, non-renewal, substitution or material alteration.

Any insurance policy shall be written by a reputable insurance company acceptable to ***Railway*** or with a current Best's Guide Rating of A- and Class VII or better, and authorized to do business in the state(s) in which the service is to be provided.

If coverage is purchased on a "claims made" basis, Contractor hereby agrees to maintain coverage in force for a minimum of three years after expiration, cancellation or termination of this Agreement. Annually Contractor agrees to provide evidence of such coverage as required hereunder.

Contractor represents that this Agreement has been thoroughly reviewed by Contractor's insurance agent(s)/broker(s), who have been instructed by Contractor to procure the insurance coverage required by this Agreement.

Not more frequently than once every five years, ***Railway*** may reasonably modify the required insurance coverage to reflect then-current risk management practices in the railroad industry and underwriting practices in the insurance industry.

If any portion of the operation is to be subcontracted by Contractor, Contractor shall require that the subcontractor shall provide and maintain insurance coverage(s) as set forth herein, naming ***Railway*** as an additional insured, and shall require that the subcontractor shall release, defend and indemnify ***Railway*** to the same extent and under the same terms and conditions as Contractor is required to release, defend and indemnify ***Railway*** herein.

Failure to provide evidence as required by this section shall entitle, but not require, ***Railway*** to terminate this Agreement immediately. Acceptance of a certificate that does not comply with this section shall not operate as a waiver of Contractor's obligations hereunder.

The fact that insurance (including, without limitation, self-insurance) is obtained by Contractor shall not be deemed to release or diminish the liability of Contractor including, without limitation, liability under the indemnity provisions of this Agreement. Damages recoverable by ***Railway*** shall not be limited by the amount of the required insurance coverage.

In the event of a claim or lawsuit involving ***Railway*** arising out of this agreement, Contractor will make available any required policy covering such claim or lawsuit.

These insurance provisions are intended to be a separate and distinct obligation on the part of the Contractor. Therefore, these provisions shall be enforceable and Contractor shall be bound thereby regardless of whether or not indemnity

INFORMATIONAL COPY ONLY - NOT FOR BIDDING PURPOSES

provisions are determined to be enforceable in the jurisdiction in which the work covered hereunder is performed.

For purposes of this section, ***Railway*** shall mean "Burlington Northern Santa Fe LLC", "BNSF Railway Company" and the subsidiaries, successors, assigns and affiliates of each.

4) SALES AND OTHER TAXES

In the event applicable sales taxes of a state or political subdivision of a state of the United States are levied or assessed in connection with and directly related to any amounts invoiced by Contractor to Railway ("Sales Taxes"), Railway shall be responsible for paying only the Sales Taxes that Contractor separately states on the invoice or other billing documents provided to Railway; *provided, however,* that (i) nothing herein shall preclude Railway from claiming whatever Sales Tax exemptions are applicable to amounts Contractor bills Railway, (ii) Contractor shall be responsible for all sales, use, excise, consumption, services and other taxes which may accrue on all services, materials, equipment, supplies or fixtures that Contractor and its subcontractors use or consume in the performance of this Agreement, (iii) Contractor shall be responsible for Sales Taxes (together with any penalties, fines or interest thereon) that Contractor fails to separately state on the invoice or other billing documents provided to Railway or fails to collect at the time of payment by Railway of invoiced amounts (except where Railway claims a Sales Tax exemption), and (iv) Contractor shall be responsible for Sales Taxes (together with any penalties, fines or interest thereon) if Contractor fails to issue separate invoices for each state in which Contractor delivers goods, provides services or, if applicable, transfers intangible rights to Railway.

Upon request, Contractor shall provide Railway satisfactory evidence that all taxes (together with any penalties, fines or interest thereon) that Contractor is responsible to pay under this Agreement have been paid. If a written claim is made against Contractor for Sales Taxes with respect to which Railway may be liable for under this Agreement, Contractor shall promptly notify Railway of such claim and provide Railway copies of all correspondence received from the taxing authority. Railway shall have the right to contest, protest, or claim a refund, in Railway's own name, any Sales Taxes paid by Railway to Contractor or for which Railway might otherwise be responsible for under this Agreement; provided, however, that if Railway is not permitted by law to contest any such Sales Tax in its own name, Contractor shall, if requested by Railway at Railway's sole cost and expense, contest in Contractor's own name the validity, applicability or amount of such Sales Tax and allow Railway to control and conduct such contest.

INFORMATIONAL COPY ONLY, NOT FOR BIDDING PURPOSES

Railway retains the right to withhold from payments made under this Agreement amounts required to be withheld under tax laws of any jurisdiction. If Contractor is claiming a withholding exemption or a reduction in the withholding rate of any jurisdiction on any payments under this Agreement, before any payments are made (and in each succeeding period or year as required by law), Contractor agrees to furnish to Railway a properly completed exemption form prescribed by such jurisdiction. Contractor shall be responsible for any taxes, interest or penalties assessed against Railway with respect to withholding taxes that Railway does not withhold from payments to Contractor.

5) EXHIBIT "C" CONTRACTOR REQUIREMENTS

The Contractor must observe and comply with all provisions, obligations, requirements and limitations contained in the Agreement, and the Contractor Requirements set forth on Exhibit "C" attached to the Agreement and this Agreement, including, but not be limited to, payment of all costs incurred for any damages to Railway roadbed, tracks, and/or appurtenances thereto, resulting from use, occupancy, or presence of its employees, representatives, or agents or subcontractors on or about the construction site. Contractor shall execute a Temporary Construction Crossing Agreement or Private Crossing Agreement (http://www.bnsf.com/communities/faqs/permits-real-estate/), for any temporary crossing requested to aid in the construction of this Project, if approved by BNSF.

6) TRAIN DELAY

Contractor is responsible for and hereby indemnifies and holds harmless Railway (including its affiliated railway companies, and its tenants) for, from and against all damages arising from any unscheduled delay to a freight or passenger train which affects Railway's ability to fully utilize its equipment and to meet customer service and contract obligations. Contractor will be billed, as further provided below, for the economic losses arising from loss of use of equipment, contractual loss of incentive pay and bonuses and contractual penalties resulting from train delays, whether caused by Contractor, or subcontractors, or by the Railway performing work under this Agreement. Railway agrees that it will not perform any act to unnecessarily cause train delay.

For loss of use of equipment, Contractor will be billed the current freight train hour rate per train as determined from Railway's records. Any disruption to train traffic may cause delays to multiple trains at the same time for the same period.

Additionally, the parties acknowledge that passenger, U.S. mail trains and certain other grain, intermodal, coal and freight trains operate under incentive/penalty contracts between Railway and its customer(s). Under these arrangements, if Railway does not meet its contract service commitments, Railway may suffer loss

INFORMATIONAL COPY ONLY, NOT FOR BIDDING PURPOSES

of performance or incentive pay and/or be subject to penalty payments. Contractor is responsible for any train performance and incentive penalties or other contractual economic losses actually incurred by Railway which are attributable to a train delay caused by Contractor or its subcontractors.

The contractual relationship between Railway and its customers is proprietary and confidential. In the event of a train delay covered by this Agreement, Railway will share information relevant to any train delay to the extent consistent with Railway confidentiality obligations. The rate then in effect at the time of performance by the Contractor hereunder will be used to calculate the actual costs of train delay pursuant to this agreement.

Contractor and its subcontractors must give Railway's representative **two (2) weeks** advance notice of the times and dates for proposed work windows. Railway and Contractor will establish mutually agreeable work windows for the project. Railway has the right at any time to revise or change the work windows due to train operations or service obligations. Railway will not be responsible for any additional costs or expenses resulting from a change in work windows. Additional costs or expenses resulting from a change in work windows shall be accounted for in Contractor's expenses for the project.

Contractor and subcontractors must plan, schedule, coordinate and conduct all Contractor's work so as to not cause any delays to any trains.

INFORMATIONAL COPY ONLY, NOT FOR BIDDING PURPOSES

IN WITNESS WHEREOF, each of the parties hereto has caused this Agreement to be executed by its duly authorized officer the day and year first above written.

<%Contractor.LegalName%>

By: _____

Printed Name: _____

Title: _____

Contact Person: _____

Address: _____

City: _____

State: _____ Zip: _____

Fax: _____

Phone: _____

E-mail: _____

BNSF Railway Company

By: _____

Name: Richard W Wagner
Manager Public Projects
NW Division for ID, WA & BC

Accepted and effective this of 2015.

INFORMATIONAL COPY ONLY, NOT FOR BIDDING PURPOSES

Exhibit F

BNSF Bridge Requirements

BRIDGE DESIGN, PLANS & SPECIFICATIONS:

Except for the design of temporary falsework and shoring, BNSF review of the Structure plans will be limited to the vertical and horizontal clearances, sight distance for existing train signals, foundation dimensions and drainage characteristics as they relate to existing and future tracks. BNSF will not review structural design calculations for the permanent Structure unless a member or members are influenced by railroad live loads.

Temporary falsework and shoring plans and calculations must be reviewed and approved by BNSF prior to beginning construction. The Agency shall perform an independent review of the design calculations for temporary falsework and shoring prior to submitting them to BNSF for approval. Temporary construction clearances must be no less than 15 feet measured horizontally from the centerline of the nearest track and 21 feet-6 inches measured vertically from the top of rail of the most elevated track to the bottom of lowest temporary falsework member. State regulatory agencies may have more restrictive requirements for temporary railroad clearances.

For the permanent Structure, the Agency will submit plans showing the least horizontal distance from the centerline of existing and future tracks to the face of the nearest member of the proposed Structure. The location of the least horizontal distance must be accurately described such that BNSF can determine where it will occur in both the horizontal and vertical plane. If the permanent member is within 25 feet of the nearest track (or future track), collision walls shall be incorporated into the permanent Structure design according to American Railway Engineering and Maintenance Association Manual of Recommended Practice - Chapter 8 - Article 2.1.5.

For the permanent Structure, the Agency will submit plans showing the least vertical clearance from top of the most elevated rail of existing and future tracks to the lowest point of the proposed Structure. A profile of the existing top of rail elevation shall be plotted on the bridge plans. The profile shall extend for 500 feet in each direction of the proposed overpass and a separate profile shall be plotted for each track. If the existing top of rail profile(s) is not uniform such that a sag exists in the vicinity of the proposed Structure, the permanent Structure vertical clearance shall be increased sufficiently to accommodate a raise in the track profile to remove the sag. Prior to beginning construction of the permanent Structure, the top of rail elevations should be checked and verified that they have not changed from the assumed elevations utilized for the design of the bridge.

Prior to issuing any invitation to bid on construction of the Structure, the Agency should conduct a pre-bid meeting where prospective Providers have the opportunity to communicate with BNSF personnel regarding site specific train speeds, train density, and general safety requirements for men and equipment working near live tracks. Any invitation to bid and

INFORMATIONAL COPY ONLY, NOT FOR BIDDING PURPOSES

specifications for the Structure must be submitted to BNSF for review and approval prior to letting of bids for the Project.

BRIDGE CONSTRUCTION:

After awarding the bid, but prior to the Provider entering BNSF's right-of –way or property, the Agency should conduct a pre-construction meeting with BNSF personnel in attendance to reiterate the safety requirements of construction activity adjacent to live tracks.

During construction, BNSF may require an independent engineering inspector to be present during certain critical activities of the Project, including but not limited to: driving foundation piles, erecting falsework, construction of shoring and retaining walls, placing concrete, placing soil backfill and compaction processes. The Agency shall reimburse BNSF for all costs of supplemental inspection services.

Within 90 days of the conclusion of the Project and final acceptance by BNSF, the Agency will provide BNSF with a complete electronic set of the bridge plans labeled "As Built". Those plans will reflect any and all deviations from the original plans that occurred during construction. The "As Built" plans will be submitted in Micro Station *.dgn electronic format (preferred) or AutoCAD *.dwg format. Electronic plans are to be submitted in the original format used for CAD plan preparation and not converted to another format prior to submission. Actual measured "as constructed" clearances shall be shown as well as depth, size and location of all foundation components. The plans shall show dimensioned locations of existing and relocated utilities.

BRIDGE MAINTENANCE:

The Agency will be responsible for maintenance and repair of the Structure including the earth retention components, embankment slopes, erosion control, surface drainage, fencing, deck drains, landscaping, paint, walkways, handrails, lighting, and other improvements associated with the Project.

Fencing and other pedestrian access controls within BNSF's right-of-way and incorporated into the Project shall be designed and maintained by the Agency. Trespasser control shall be the responsibility of the Agency. Graffiti removal will be the responsibility of the Agency.

BRIDGE INSPECTION:

The Agency will conduct annual routine structural inspections. In the event of an earthquake, fire, flood, damage from vehicular impacts or other emergent situations, the Agency will provide an immediate inspection by qualified personnel and notify BNSF of damage that may affect safe passage of trains. If necessary the Agency will embargo weights or provide lane closures or

INFORMATIONAL COPY ONLY, NOT FOR BIDDING PURPOSES

other such measures to protect the structural integrity of the Structure such that there can be continuous safe passage of trains until repairs are made.

BRIDGE ALTERATIONS:

Except as provided otherwise by this Agreement, there will be no alterations made to the Structure that will alter the railroad vertical or horizontal clearances provided by the original design. Pipelines will be not be added or attached to the Structure without first submitting plans and calculations to BNSF for review and approval.

INFORMATIONAL COPY ONLY, NOT FOR BIDDING PURPOSES

INFORMATIONAL COPY ONLY, NOT FOR BIDDING PURPOSES

BR. #399, W-NW BRIDGE REPLACEMENT

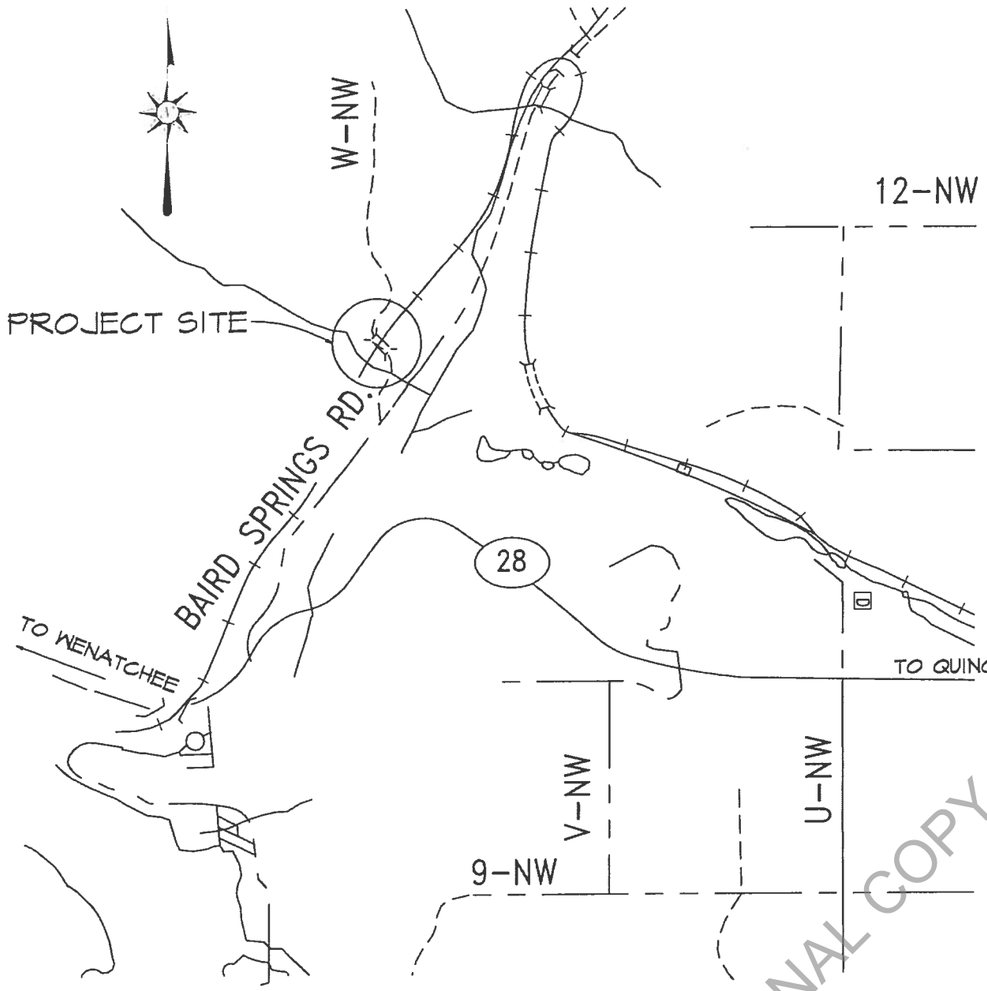

SHEET		DESCRIPTION
1	—	INDEX & VICINITY MAP
2	—	SUMMARY OF QUANTITIES
3	—	PLAN & PROFILE
4	—	TYPICAL X-SECTIONS
4A	—	SIGN PLAN MAP
5-21	—	BRIDGE DETAILS

FEDERAL AID NO.
BROS - 2013(078)
TA - #5085

Grant County
Board Of Commissioners

Richard Stevens, District No. 1 (Chair)
Carolann Swartz, District No. 2
Cindy Carter, District No. 3

INFORMATIONAL COPY ONLY, NOT FOR BIDDING PURPOSES

GRANT COUNTY PUBLIC WORKS DEPARTMENT
124 ENTERPRISE ST. SE
EPHRATA, WASHINGTON 98823
(509) 754-6082 FAX (509) 754-6087

BR. #399, W-NW
BRIDGE REPLACEMENT

CRP 13-02

DESIGNED BY:	BOB BERSANTI
CHECKED BY:	TODD MITTGE
APPROVED BY:	JEFF TINCHER
REVISIONS BY:	BOB BERSANTI
DATE REVISED:	3/19/2015
FEDERAL AID NO.:	BROS - 2013(078)

JEFFREY C. TINCHER
STATE OF WASHINGTON
42338
REGISTERED
PROFESSIONAL ENGINEER
DATE: 3/19/2015

SHEET 1 OF 21

SUMMARY OF QUANTITIES

ITEM NO.	TOTAL QUANTITY	UNIT	ITEM DESCRIPTION	STA. 6+75 TO STA. 13+50
			PREPARATION	
1	1	L.S.	Mobilization	L.S.
2	1	L.S.	Notification	L.S.
3	1	L.S.	Clearing & Grubbing	L.S.
4	1	L.S.	Removal of Existing Bridge	L.S.
			GRADING	
5	191	C.Y.	Roadway Excavation	191
6	4,314	C.Y.	Embankment Compaction	4,314
7	6,000	C.Y.	Borrow Excavation Incl. Haul	6,000
8	189	S.Y.	Construction Geotextile For Separation	189
			SURFACING	
9	600	C.Y.	Crushed Surfacing Base Course	600
10	400	C.Y.	Crushed Surfacing Maintenance Rock	400
11	35	TON	Commercial HMA Class 1/2" Incl. PG64-28 Paving Asphalt	35
			STRUCTURE	
12	96	C.Y.	Structure Excavation Class "A" Incl. Haul	96
13	582	S.F.	Shoring or Extra Excavation Class "A"	582
14	192	C.Y.	Gravel Backfill for Wall	192
15	9,838	LBS.	St. Reinf. Bar	9,838
16	51	C.Y.	Concrete Class 4000 for Abutment Footing and Walls	51
17	1	L.S.	Superstructure - Bridge #399, W-NW Road	L.S.
18	1	L.S.	Temporary Bridge	L.S.
			TRAFFIC	
19	2	EACH	Beam Guardrail Transition Section Type 10	2
20	2	EACH	Beam Guardrail Transition Section Type 11	2
21	4	EACH	Beam Guardrail SRT Flared Terminal	4
22	1	L.S.	Permanent Signing	L.S.
23	1	L.S.	Project Temporary Traffic Control	L.S.
			OTHER ITEMS	
24	100	L.F.	Extruded Curb Type 2	100
25	1	L.S.	Spill Prevention, Control, and Countermeasure (SPCC) Plan	L.S.
26	1	L.S.	Trimming and Cleanup	L.S.
27	0.5	Acre	Seeding, Fertilizing and Mulching with Dry Land Mix	0.5
28	-1	EST.	Minor Change	-1

NOTE: For Special Features See Special Provisions.

INFORMATIONAL COPY ONLY, NOT FOR BIDDING PURPOSES

GRANT COUNTY PUBLIC WORKS DEPARTMENT
124 ENTERPRISE ST. SE
EPHRATA, WASHINGTON 98823
(509) 754-6082 FAX (509) 754-6087

BR. #399, W-NW
BRIDGE REPLACEMENT

CRP 13-02

DESIGNED BY:	BOB BERSANTI
CHECKED BY:	TODD MITTGE
APPROVED BY:	JEFF TINCHER
REVISIONS BY:	BOB BERSANTI
DATE REVISED:	3/19/2015
FEDERAL AID NO.:	BROS - 2013(078)

JEFFREY C. TINCHER
STATE OF WASHINGTON
42338
REGISTERED
PROFESSIONAL ENGINEER

DATE: 3/19/2015

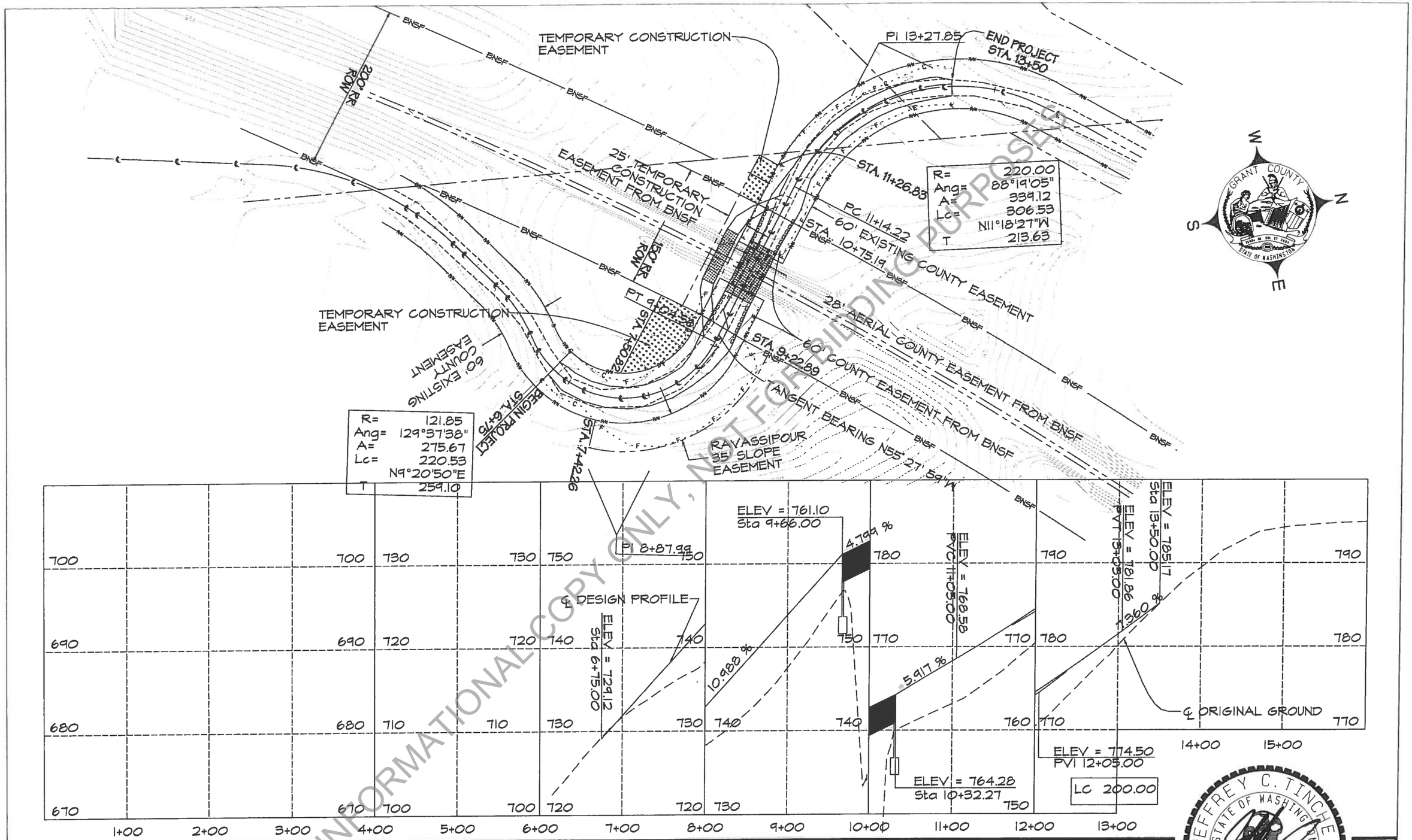

INFORMATIONAL COPY ONLY, NOT FOR BIDDING PURPOSES

GRANT COUNTY PUBLIC WORKS DEPARTMENT
124 ENTERPRISE ST. SE
EPHRATA, WASHINGTON 98823
(509) 754-6082 FAX (509) 754-6087

BR. #399, W-NW BRIDGE REPLACEMENT

PLAN & PROFILE

CRP 13-02

DESIGNED BY:	BOB BERSANTI
CHECKED BY:	TODD MITTGE
APPROVED BY:	JEFF TINCHER
REVISIONS BY:	BOB BERSANTI
DATE REVISED:	3/19/2015
FEDERAL AID NO.:	BROS - 2013(078)

JEFFREY C. TINCHER
STATE OF WASHINGTON
42338
REGISTERED
PROFESSIONAL ENGINEER

DATE: 3/19/2015

SHEET 3 OF 21

TYPICAL ROADWAY SECTION "A"

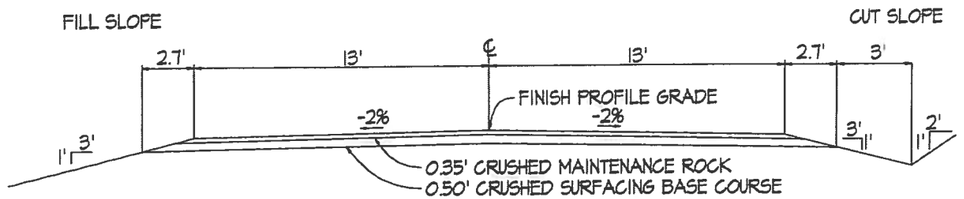

STA. 6+75 TO STA. 8+55
TRANSITION ROADWAY SECTION "A" STA. 8+55 TO TYPICAL ROADWAY SECTION "B" STA. 9+05
STA. 11+33 TO STA. 13+50

TYPICAL GUARDRAIL SECTION

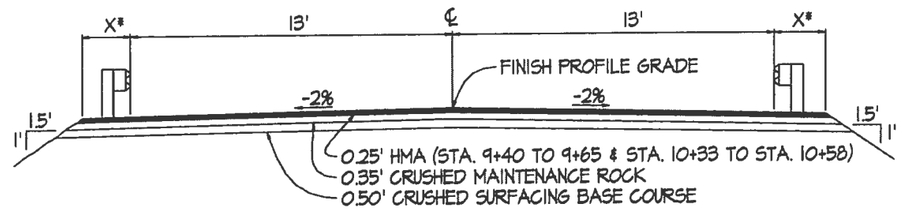

STATION	X
9+15	7'
9+55	3.5'
9+65	3.5'

STATION	X
10+33	3.5'
10+43	3.5'
10+83	7'

TYPICAL ROADWAY SECTION "B"

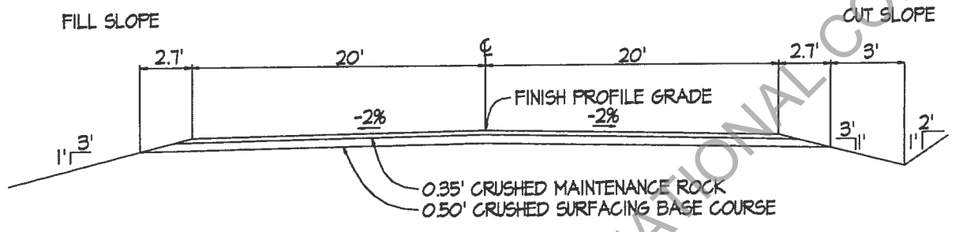

STA. 9+05 TO STA. 9+15
TRANSITION ROADWAY SECTION "B" STA. 9+15 TO TYPICAL GUARDRAIL SECTION STA. 9+15
STA. 10+83 TO STA. 10+93
TRANSITION ROADWAY SECTION "B" STA. 10+93 TO ROADWAY SECTION "A" STA. 11+33

BRIDGE #399

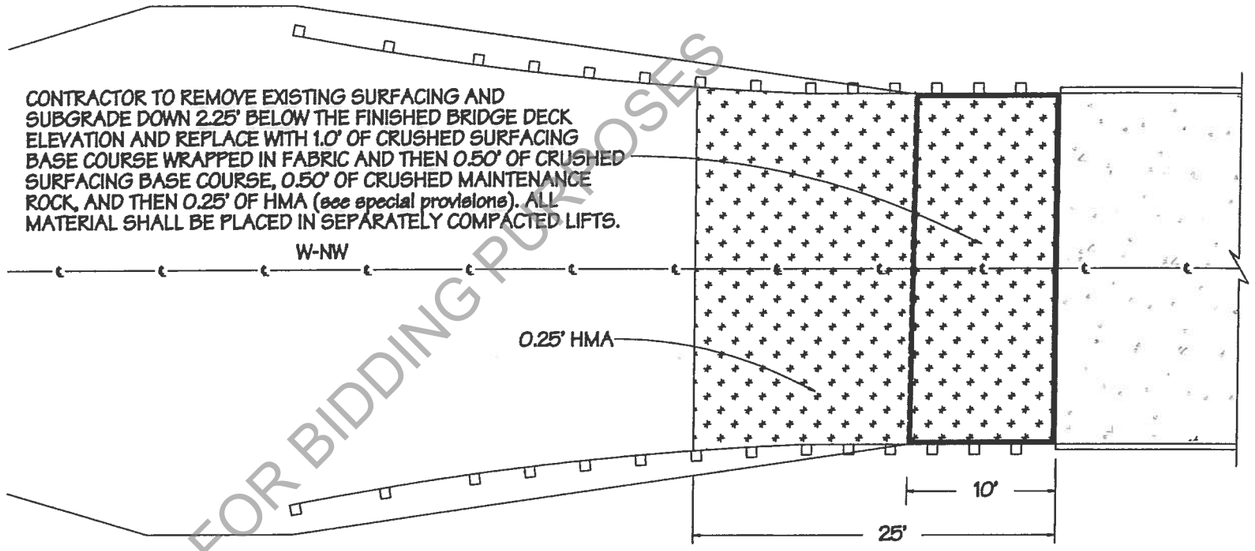

PLAN VIEW

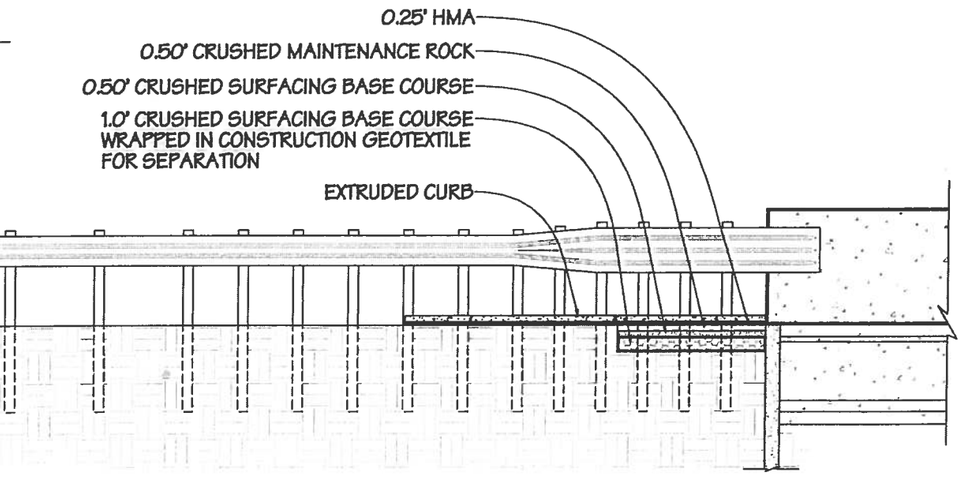

PROFILE VIEW

INFORMATIONAL COPY ONLY, NOT FOR BIDDING PURPOSES

GRANT COUNTY PUBLIC WORKS DEPARTMENT
124 ENTERPRISE ST. SE
EPHRATA, WASHINGTON 98823
(509) 754-6082 FAX (509) 754-6087

BR. #399, W-NW
BRIDGE REPLACEMENT

CRP 13-02

DESIGNED BY:	BOB BERSANTI
CHECKED BY:	TODD MITTGE
APPROVED BY:	JEFF TINCHER
REVISIONS BY:	BOB BERSANTI
DATE REVISED:	3/19/2015
FEDERAL AID NO.:	BROS - 2013(078)

JEFFREY C. TINCHER
STATE OF WASHINGTON
42338
REGISTERED
PROFESSIONAL ENGINEER

DATE: 3/19/2015

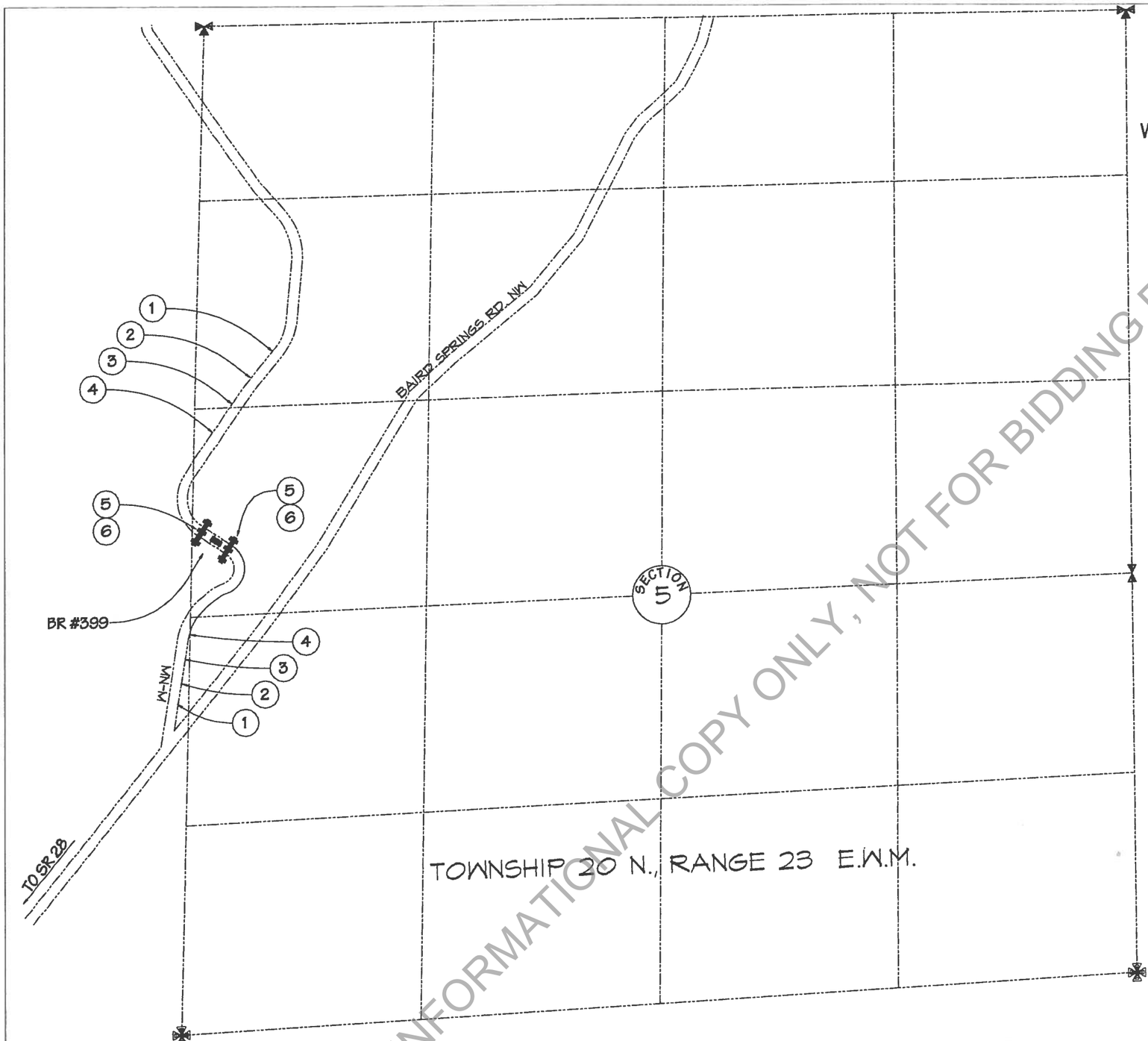

N

W E

S

NOTES:

- ALL SIGNS SHALL BE HIGH INTENSITY
- CONTRACTOR TO PROVIDE WEIGHT LIMIT SIGNS FOR TEMPORARY BRIDGE

1	2	ROAD WORK AHEAD
2	2	BRIDGE WORK AHEAD 500 FT
3	2	10 MPH
4	2	ROUGH ROAD 10 MPH
5	2	ROAD CLOSED
6	2	BRIDGE OUT

TYPE III BARRICADES

INFORMATIONAL COPY ONLY, NOT FOR BIDDING PURPOSES

JEFFREY C. TINCHER
STATE OF WASHINGTON
42338
REGISTERED
PROFESSIONAL ENGINEER

DATE:

GRANT COUNTY PUBLIC WORKS DEPARTMENT
124 ENTERPRISE ST. SE
EPHRATA, WASHINGTON 98823
(509) 754-6082 FAX (509) 754-6087

BR. #399, W-NW BRIDGE REPLACEMENT

SIGN PLAN MAP

CRP 13-02

DESIGNED BY:	BOB BERSANTI
CHECKED BY:	TODD MITTGE
APPROVED BY:	JEFF TINCHER
REVISIONS BY:	BOB BERSANTI
DATE REVISED:	3/19/2015
FEDERAL AID NO.:	BROS - 2013(078)

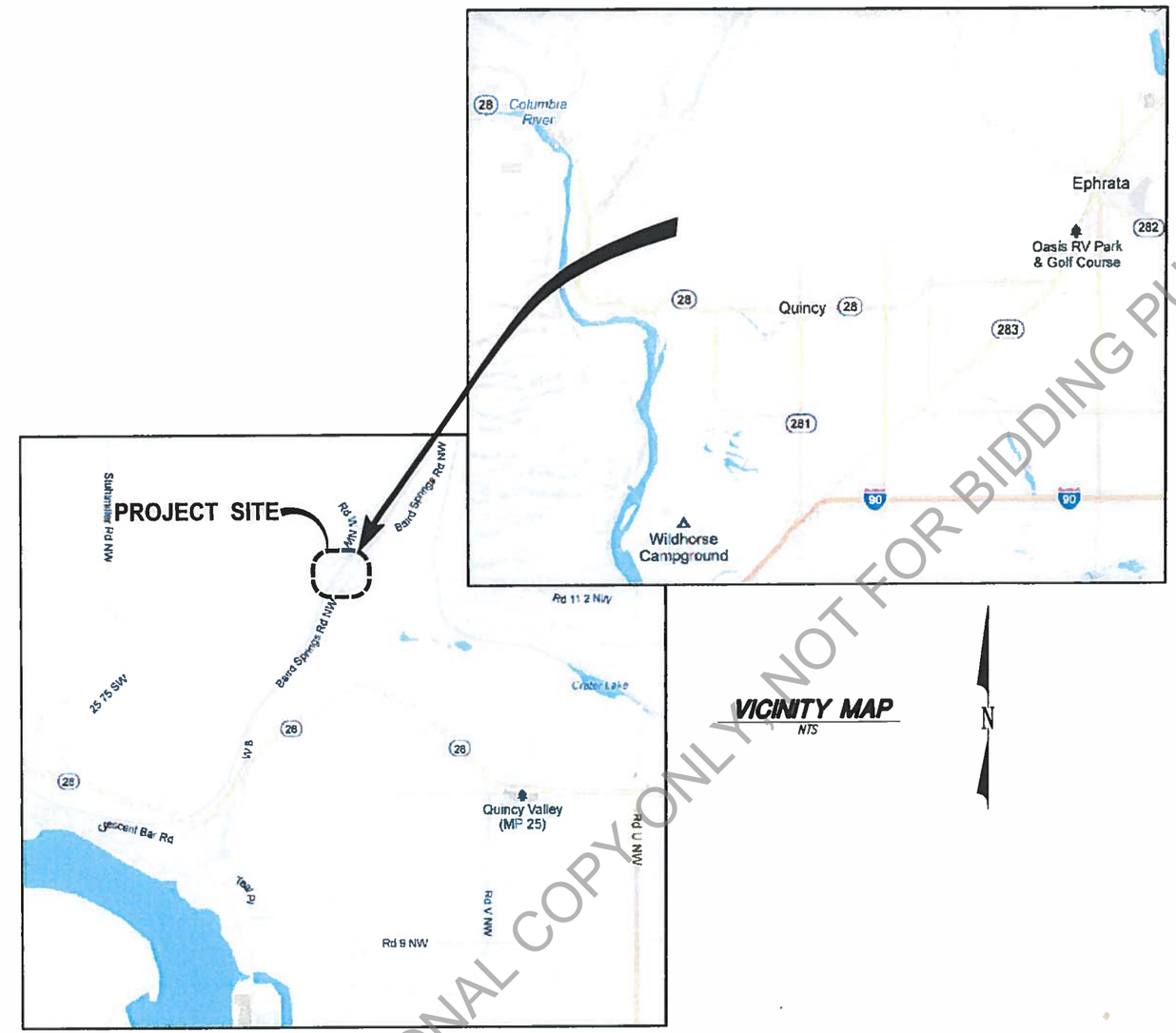

VICINITY MAP
NTS

N

INFORMATIONAL COPY ONLY, NOT FOR BIDDING PURPOSES

SURVEY: ALL ELEVATIONS SHOWN ARE USING A PROJECT SPECIFIC DATUM. THIS DATUM IS SET USING AN ELEVATION OF 1,000.00 FEET AT THE SE CORNER OF SECTION 31, TOWNSHIP 21N, RANGE 23E, W.M.

3/19/2015

Approved for Construction — Date
Grant County, Road Engineer

RAILROAD MILEPOST 1624.9
COLUMBIA RIVER SUBDIVISION
TRINIDAD, WASHINGTON – GRANT COUNTY
47°15'15" N 119°58'55" W

DESIGNED BY	JRL	11/20/14			
ENTERED BY	TLA	11/20/14			
CHECKED BY	AMS	11/20/14			
PROJ. ENGR.	DKM	11/20/14			
REGIONAL ADM.					
		DATE	DATE	REVISION	BY

REGION NO. | STATE WASH | FED.AID PROJ.NO. BROS-2013(078)

JOB NUMBER CRP13-02

CONTRACT NO.

CALL TWO BUSINESS DAYS BEFORE YOU DIG 1-800-424-5555

IZZAT H. HASAYEN, STATE OF WASHINGTON, 28933, PROFESSIONAL ENGINEER — 11/20/2014

kpff Consulting Engineers
1601 Fifth Avenue, Suite 1600
Seattle, Washington 98101
(206) 622-5822 Fax (206) 622-8130

GRANT COUNTY

GRANT COUNTY
BRIDGE #399 REPLACEMENT

COVER SHEET AND VICINITY MAP

CV-1

SHEET 5 OF 21 SHEETS

Drafter: MikeG Date: Mar 06, 2015-08:14am
Path: C:\TEMP\AcPublish_3612\GC_CV-1.dwg
Xref: KPFF-1_x22341b

SECTION 31, T. 21 N., R. 23E., W. M.

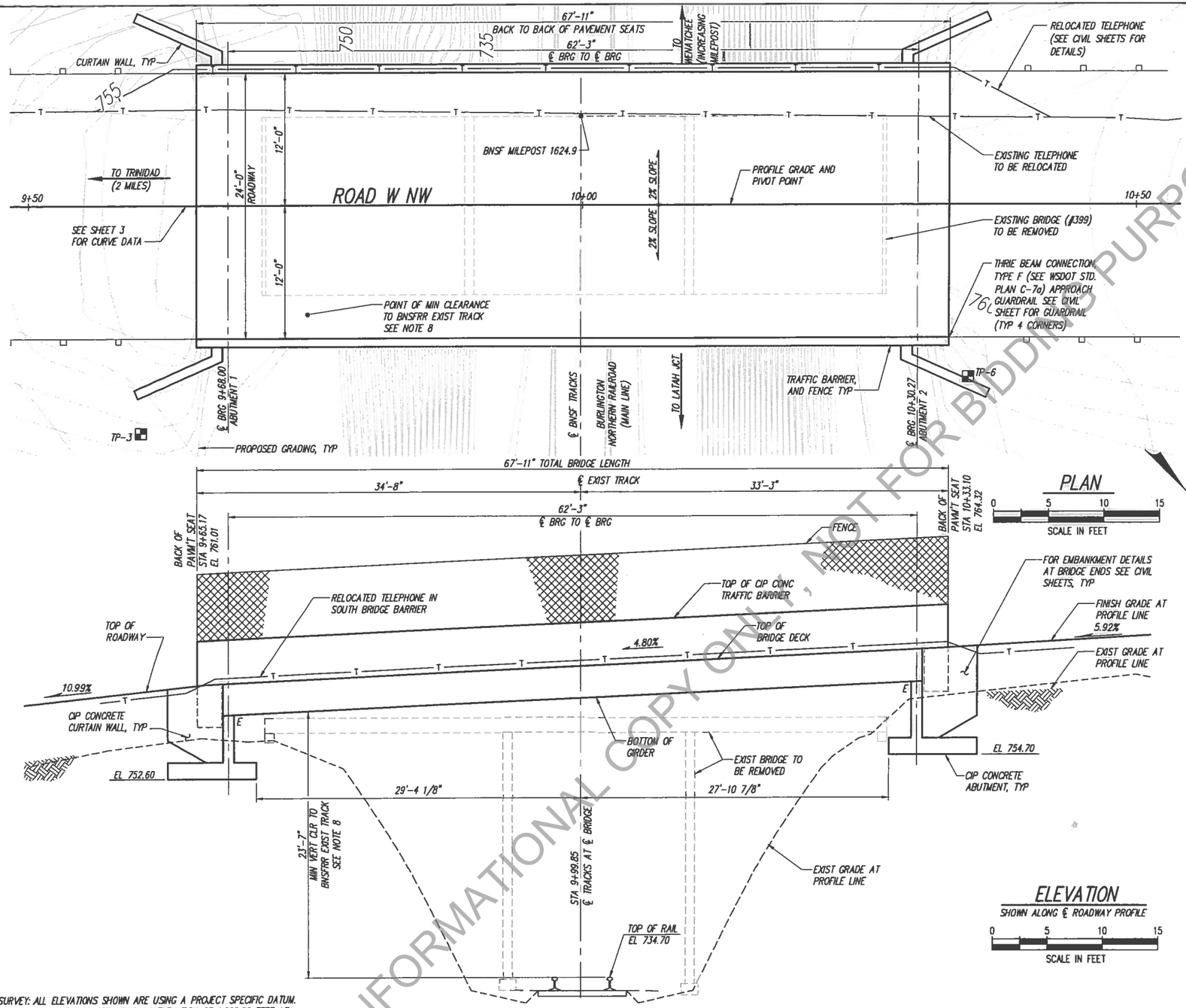

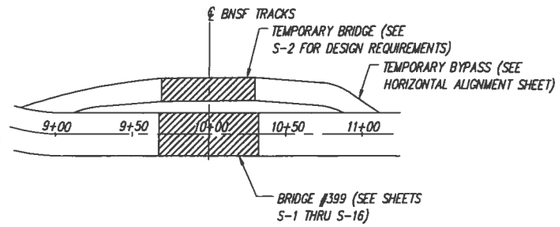

PLAN
NTS

PLAN
0 5 10 15
SCALE IN FEET

ELEVATION
SHOWN ALONG ℄ ROADWAY PROFILE
0 5 10 15
SCALE IN FEET

SURVEY: ALL ELEVATIONS SHOWN ARE USING A PROJECT SPECIFIC DATUM. THIS DATUM IS SET USING AN ELEVATION OF 1,000.00 FEET AT THE SE CORNER OF SECTION 31, TOWNSHIP 21N, RANGE 23E, W.M.

BNSF NOTES:

1. BNSF R/W AT BRIDGE IS 150FT WIDE, CENTERED ON THE EXISTING TRACKS.
2. COUNTY ROAD R/W IS 60FT WIDE, CENTERED ON THE EXISTING BRIDGE CENTERLINE.
3. NEAREST RAILROAD STATION IS TRINIDAD.
4. END STATION OF RAILROAD SUBDIVISION IS WENATCHEE.
5. PER CORRESPONDENCE WITH BNSF, NO FUTURE TRACKS OR ACCESS ROADWAYS WILL BE PLANNED IN THIS PROJECT AREA.
6. THERE WILL BE NO JOINTS OR DRAINS IN THE BRIDGE DECK.
7. DRAINAGE FLOW ON BOTH SIDES OF TRACKS IS TOWARDS THE SW (TOWARDS WENATCHEE).
8. POINT OF MINIMUM CLEARANCE TO BNSFRR EXISTING TRACK WITHIN 25'-0" OF CENTERLINE OF TRACKS.

PRECAST PRESTRESSED CONCRETE GIRDERS (W35DG)
LOADING: HL-93

Approved for Construction
Grant County, Road Engineer

3/19/2015
Date

RAILROAD MILEPOST 1624.9
COLUMBIA RIVER SUBDIVISION
TRINIDAD, WASHINGTON - GRANT COUNTY
47°15'15" N 119°58'55" W

INFORMATIONAL COPY ONLY, NOT FOR BIDDING PURPOSES

DESIGNED BY	JRL	11/20/14			
ENTERED BY	TLA	11/20/14			
CHECKED BY	AMS	11/20/14			
PROJ. ENGR.	DKM	11/20/14			
REGIONAL ADM.					
		DATE	DATE	REVISION	BY

REGION NO. | STATE: WASH | FED.AID PROJ.NO.: BROS-2013(078)
JOB NUMBER: CRP13-02
CONTRACT NO.

CALL TWO BUSINESS DAYS BEFORE YOU DIG 1-800-424-5555

LEAL H. HASVOLD, STATE OF WASHINGTON, 28833, PROFESSIONAL ENGINEER — 11/20/14

kpff Consulting Engineers
1501 Fifth Avenue, Suite 1600
Seattle, Washington 98101
(206) 622-5822 Fax (206) 622-8130

GRANT COUNTY

GRANT COUNTY
BRIDGE #399 REPLACEMENT

BRIDGE PLAN AND ELEVATION

S-1

SHEET 6 OF 21 SHEETS

Drafter: MikeG Date: Mar 06, 2015-08:14am
Path: V:\113154 (Grant Co. Bridge No. 399)\Design\GC_S-1.dwg
Xref: | KPFF-1_x2234b | br#399_KPFF Altered | BR #399 profile_Altered | br #99 plan view | Finish Contours |

GENERAL NOTES

1. ALL MATERIAL AND WORKMANSHIP SHALL BE IN ACCORDANCE WITH THE REQUIREMENTS OF THE WASHINGTON STATE DEPARTMENT OF TRANSPORTATION "STANDARD SPECIFICATIONS FOR ROAD, BRIDGE AND MUNICIPAL CONSTRUCTION", DATED 2014, AMENDMENTS AND PROJECT SPECIAL PROVISIONS.

2. THE STRUCTURE HAS BEEN DESIGNED IN ACCORDANCE WITH THE REQUIREMENTS OF THE AASHTO LRFD BRIDGE DESIGN SPECIFICATIONS SIXTH EDITION – DATED 2012.

3. SEISMIC DESIGN OF THE STRUCTURE HAS BEEN COMPLETED USING:

   PGA = 0.132
   A_S = 0.105
   S_{DS} = 0.243
   S_{D1} = 0.086
   T_{EQ} = 0.0
   SITE CLASS = A

   FOR ABUTMENT WALLS AND WING WALLS:
   MONONOBE–OKABE LATERAL SEISMIC
   PRESSURE = 43H PSF

4. DESIGN LOADS:

   DEAD LOAD:
   CONCRETE – 160 PCF
   STEEL – 490 PCF
   SUPERIMPOSED DEAD LOAD FOR FUTURE OVERLAY – 24 PSF

   LIVE LOAD:
   VEHICLE – AASHTO HL93 W/IMPACT
   SURCHARGE – 250 PSF

   EARTH PRESSURE:
   LATERAL – 50 PCF EQUIVALENT AT REST FLUID PRESSURE
   34 PCF EQUIVALENT ACTIVE FLUID PRESSURE

5. THE BACKFILL BEHIND THE ABUTMENT MAY BE PLACED TO A MAXIMUM ELEVATION OF 756.7' PRIOR TO PLACEMENT OF SUPERSTRUCTURE.

6. UNLESS OTHERWISE SHOWN IN THE PLANS THE CONCRETE COVER MEASURED FROM THE FACE OF THE CONCRETE TO THE FACE OF ANY REINFORCING STEEL SHALL BE 2 1/2" ON THE TOP OF THE ROADWAY SLAB, ONE INCH AT THE BOTTOM OF THE ROADWAY SLAB, THREE INCHES AT THE BOTTOM OF THE FOOTINGS, TWO INCHES AT THE TOP OF THE FOOTINGS, AND ONE AND ONE HALF INCHES AT ALL OTHER LOCATIONS.

7. ALL CAST-IN-PLACE CONCRETE SHALL BE CLASS 4000, UNO.

8. REINFORCING STEEL SHALL BE ASTM A706, GRADE 60 FOR CAST-IN-PLACE COMPONENTS OF THE BRIDGE SUPERSTRUCTURE AND AASHTO M31, GRADE 60 OR ASTM A706 FOR RETAINING WALLS AND OTHER COMPONENTS, UNO.

9. ALL EXTERIOR CORNERS AND EDGES SHALL HAVE A 3/4" CHAMFER AND ALL INTERIOR CORNERS SHALL HAVE A 3/4" FILLET UNO.

10. ALL DIMENSIONS AND ELEVATIONS SHALL BE VERIFIED IN THE FIELD BY THE CONTRACTOR.

TEMPORARY BRIDGE NOTES:

1. MINIMUM OVERALL LENGTH FOR THE TEMPORARY BRIDGE SHALL BE NO LESS THAN 65'–0".
2. MINIMUM USEABLE ROADWAY WIDTH FOR THE TEMPORARY BRIDGE SHALL BE NO LESS THAN 12'–0".
3. TEMPORARY BRIDGE SUPERSTRUCTURE SHALL PROVIDE A MINIMUM VERTICAL CLEARANCE OF 21'–0" TO THE TOP OF BNSFRR EXIST TRACK.
4. UNLESS OTHERWISE APPROVED BY THE ENGINEER, THE PROFILE OF THE ROADWAY DECK SHALL BE AS SPECIFIED IN THE PLANS.
5. TEMPORARY BRIDGE, INCLUDING BARRIERS, SHALL BE DESIGNED IN ACCORDANCE WITH THE LATEST EDITION OF THE AASHTO LRFD BRIDGE DESIGN SPECIFICATIONS AND THE WSDOT GEOTECHNICAL DESIGN MANUAL (M46–03).
6. THE MINIMUM VEHICULAR LIVE LOAD SHALL BE DESIGNED IN ACCORDANCE WITH THE SPECIAL PROVISIONS.
7. FOR ADDITIONAL DESIGN REQUIREMENTS SEE SPECIAL PROVISIONS FOR TEMPORARY BRIDGE, SECTION 6–01.5.

ABBREVIATIONS

A/C	ASPHALT CONCRETE
ABT	ABOUT
BH	BORE HOLE PATCH
BM	BENCH MARK
BMP	BEST MANAGEMENT PRACTICE
BRG	BEARING
BOT	BOTTOM
CG	CENTER OF GRAVITY
CIP	CAST–IN–PLACE
CJ	CONSTRUCTION JOINT
CL, ℄	CENTERLINE
CLR	CLEAR
CO.	COUNTY
CONC	CONCRETE
CONST	CONSTRUCTION
CONT	CONTINUOUS
CSBC	CRUSHED SURFACING BASE COURSE
EA	EACH
EL, ELEV	ELEVATION
EQ	EQUAL
ESC	EROSION SEDIMENT CONTROL
EXC	EXCAVATION
EXIST	EXISTING
FF	FAR FACE
GIR	GIRDER
HMA	HOT MIX ASPHALT
HORIZ	HORIZONTAL
HWY	HIGHWAY
INCL	INCLUDING
JT	JOINT
MAX	MAXIMUM
MIN	MINIMUM
NF	NEAR FACE
NTS	NOT TO SCALE
OC	ON CENTER
OPP	OPPOSITE
PAVM'T	PAVEMENT
PCF	POUNDS PER CUBIC FEET
PEN	PENETRATION
PL	PLATE
P.S.	PRESTRESSED
PSF	POUNDS PER SQUARE FOOT
PT	POINT
REINF	REINFORCEMENT
ROW	RIGHT OF WAY
SPA	SPACING
SPEC	SPECIFICATION
STA	STATION
STD	STANDARD
STR	STRAIGHT
SW	SIDEWALK
SYM, SYMM	SYMMETRICAL
TEMP	TEMPORARY
T.O.	TOP OF
TYP	TYPICAL
UNO	UNLESS NOTED OTHERWISE
VERT	VERTICAL
WHS	WELDED HEADED STUD
WP	WORK POINT

LEGEND

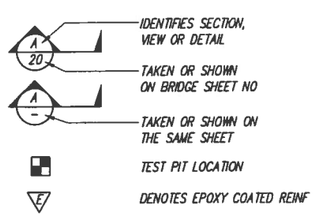

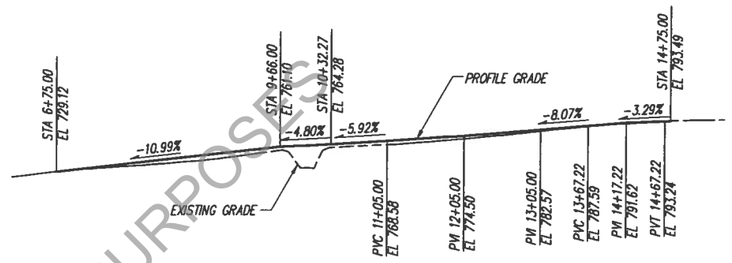

PROFILE

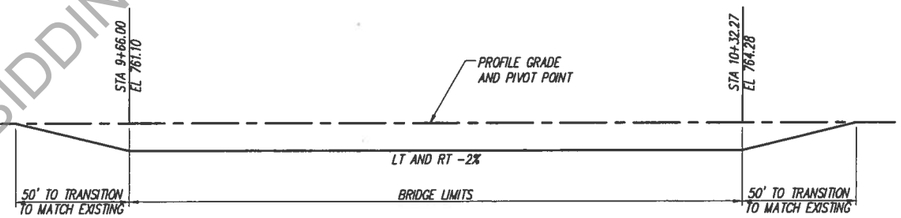

SUPERELEVATION

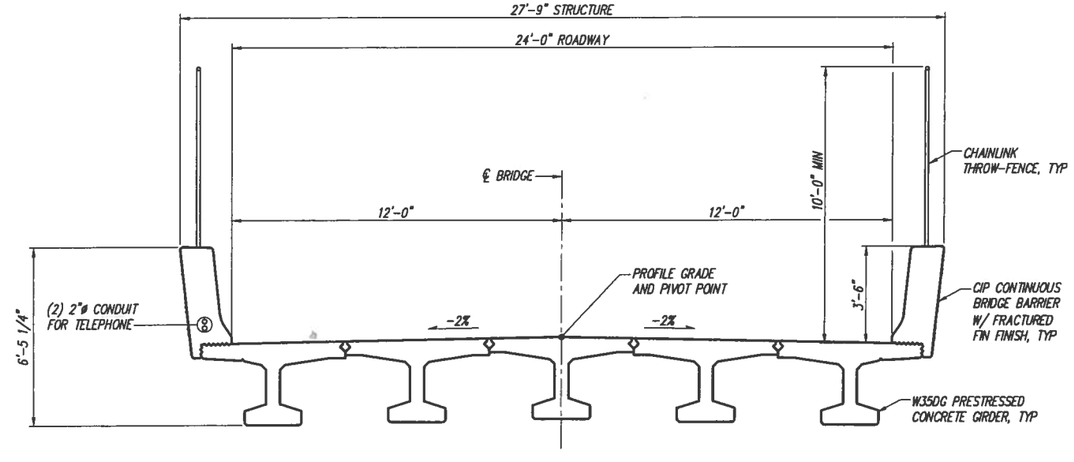

TYPICAL SECTION (A)

SCALE: 3/8"=1'–0"
LOOKING UP STATION

3/14/2014
Approved for Construction — Date
Grant County, Road Engineer

RAILROAD MILEPOST 1624.9
COLUMBIA RIVER SUBDIVISION
TRINIDAD, WASHINGTON – GRANT COUNTY
47°15'15" N 119°58'55" W

INFORMATIONAL COPY ONLY, NOT FOR BIDDING PURPOSES

DESIGNED BY	JRL	11/20/14				
ENTERED BY	TLA	11/20/14				
CHECKED BY	AMS	11/20/14				
PROJ. ENGR.	DKM	11/20/14				
REGIONAL ADM.						
		DATE	DATE	REVISION	BY	

REGION NO. | STATE: WASH | FED.AID PROJ.NO.: BROS–2013(078)
JOB NUMBER: CRP13–02
CONTRACT NO.:

CALL TWO BUSINESS DAYS BEFORE YOU DIG 1–800–424–5555

IZZAT H. HASAYEN — STATE OF WASHINGTON — 20823 — REGISTERED PROFESSIONAL ENGINEER — 11/20/14

kpff Consulting Engineers
1601 Fifth Avenue, Suite 1600
Seattle, Washington 98101
(206) 622-5822 Fax (206) 622-8130

GRANT COUNTY — BOARD OF COUNTY COMMISSIONERS

GRANT COUNTY
BRIDGE #399 REPLACEMENT

GENERAL NOTES, ABBREV., AND TYP SECTION

S-2

SHEET 7 OF 21 SHEETS

Drafter: MikeG Date: Mar 06, 2015–08:14am
Path: V:\113154 (Grant Co. Bridge No. 399)\Design\GC_S–2.dwg
Xref: KPFF–1_x2234tb

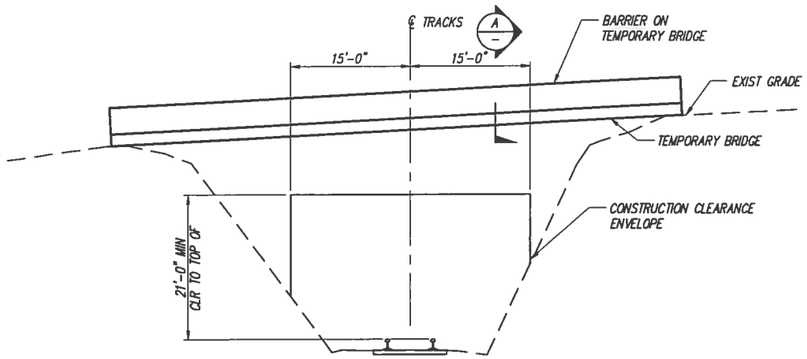

STAGE 1
CONSTRUCT TEMPORARY BYPASS

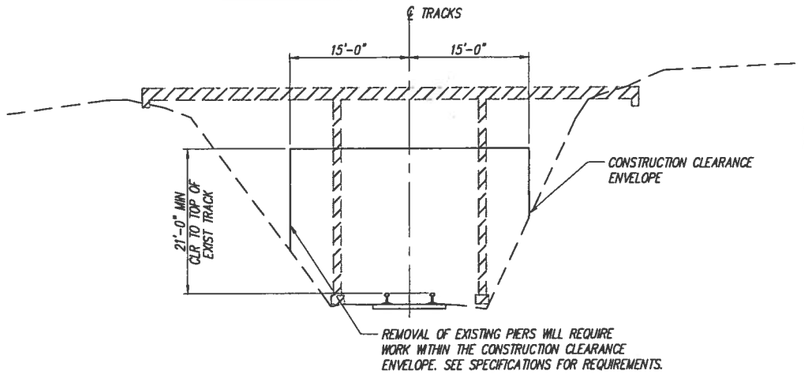

STAGE 2
REMOVE EXISTING BRIDGE

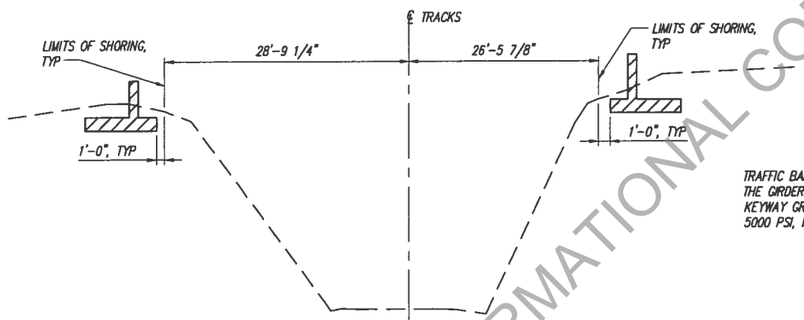

STAGE 3
CONSTRUCT ABUTMENTS

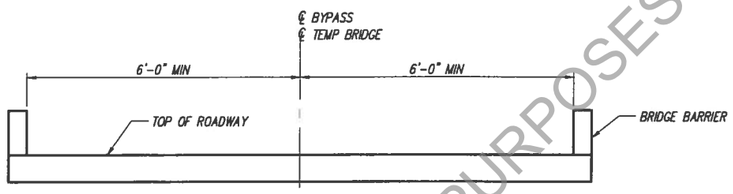

TEMPORARY BRIDGE TYPICAL SECTION (A)

SEE S-2 FOR TEMPORARY BRIDGE NOTES

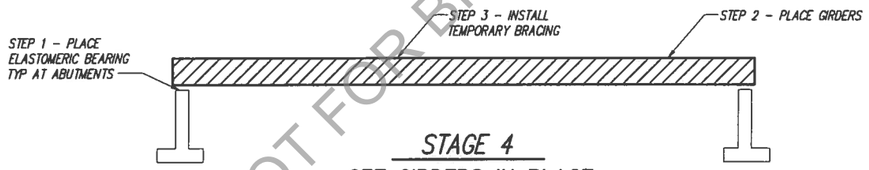

STAGE 4
SET GIRDERS IN PLACE

INSTALL TEMPORARY BRACING FOR ERECTION IN ACCORDANCE WITH STD SPEC SECTION 6-02.3(17)F.

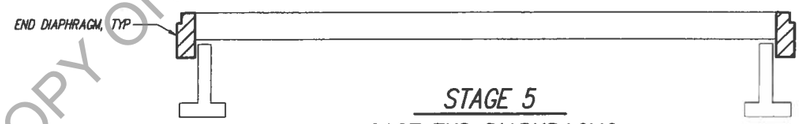

STAGE 5
CAST END DIAPHRAGMS

INSTALL TEMPORARY BRACING FOR DIAPHRAGM IN ACCORDANCE WITH STD SPEC SECTION 6-02.3(17)F.

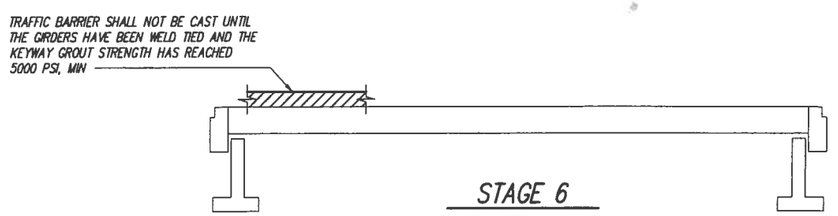

STAGE 6
CAST TRAFFIC BARRIERS

NOTES:
1. ALL TEMPORARY WORK SHALL BE OUTSIDE OF THE CONSTRUCTION CLEARANCE ENVELOPE SHOWN IN STAGE 2.

CONSTRUCTION NOTES:
1. ANY SHORING SYSTEM THAT IMPACTS THE RAILROAD'S OPERATION AND/OR SUPPORTS THE RAILROAD'S EMBANKMENT SHALL BE DESIGNED AND CONSTRUCTED PER RAILROAD GUIDELINES FOR TEMPORARY SHORING.
2. ALL DEMOLITION WITHIN THE RAILROADS' RIGHT-OF-WAY AND/OR DEMOLITION THAT MAY IMPACT THE RAILROAD'S TRACKS OR OPERATIONS SHALL COMPLY WITH THE RAILROAD'S DEMOLITION REQUIREMENTS.
3. ERECTION OVER THE RAILROAD'S TRACK SHALL BE PLANNED SUCH THAT IT ENABLES THE TRACKS(S) TO REMAIN OPEN TO TRAFFIC PER RAILROAD REQUIREMENTS.
4. THE ELEVATION OF THE EXISTING TOP-OF-RAIL PROFILE SHALL BE VERIFIED BEFORE BEGINNING CONSTRUCTION. ALL DISCREPANCIES SHALL BE BROUGHT TO THE ATTENTION OF THE RAILROAD PRIOR TO CONSTRUCTION.
5. THE PROPOSED GRADE SEPARATION PROJECT SHALL NOT CHANGE THE QUANTITY AND/OR CHARACTERISTICS OF THE FLOW IN THE RAILROAD DITCHES AND/OR DRAINAGE STRUCTURES.
6. THE CONTRACTOR MUST SUBMIT A PROPOSED METHOD OF EROSION AND SEDIMENT CONTROL AND HAVE THE METHOD APPROVED BY THE RAILROAD PRIOR TO BEGINNING ANY GRADING ON THE PROJECT SITE.
7. FOR RAILROAD COORDINATION PLEASE REFER TO THE RAILROAD'S COORDINATION REQUIREMENTS AS PART OF THE SPECIFICATIONS OR SPECIAL PROVISIONS OF THE PROJECT.
8. ALL PERMANENT CLEARANCES SHALL BE VERIFIED BEFORE PROJECT CLOSEOUT.

3/14/2015
Approved for Construction — Date
Grant County, Road Engineer

RAILROAD MILEPOST 1624.9
COLUMBIA RIVER SUBDIVISION
TRINIDAD, WASHINGTON - GRANT COUNTY
47°15'15" N 119°58'55" W

INFORMATIONAL COPY ONLY, NOT FOR BIDDING PURPOSES

					REGION NO.	STATE	FED.AID PROJ.NO.	
						WASH		
DESIGNED BY	JRL	11/20/14			JOB NUMBER		BROS-2013(078)	
ENTERED BY	TLA	11/20/14			CRP13-02			
CHECKED BY	AMS	11/20/14			CONTRACT NO.			
PROJ. ENGR.	DKM	11/20/14						
REGIONAL ADM.								
		DATE	DATE	REVISION	BY			

CALL TWO BUSINESS DAYS BEFORE YOU DIG 1-800-424-5555

JOHN H. HARVEY — STATE OF WASHINGTON — 22853 — PROFESSIONAL ENGINEER — 11/20/2014

kpff Consulting Engineers
1601 Fifth Avenue, Suite 1600
Seattle, Washington 98101
(206) 622-5822 Fax (206) 622-8130

GRANT COUNTY

GRANT COUNTY
BRIDGE #399 REPLACEMENT

CONSTRUCTION SEQUENCE

S-3

SHEET 8 OF 21 SHEETS

Drafter: MikeG Date: Mar 06, 2015-08:14am
Path: V:\113154 (Grant Co. Bridge No. 399)\Design\GC_S-3.dwg
Xref: KPFF-1_x2234tb

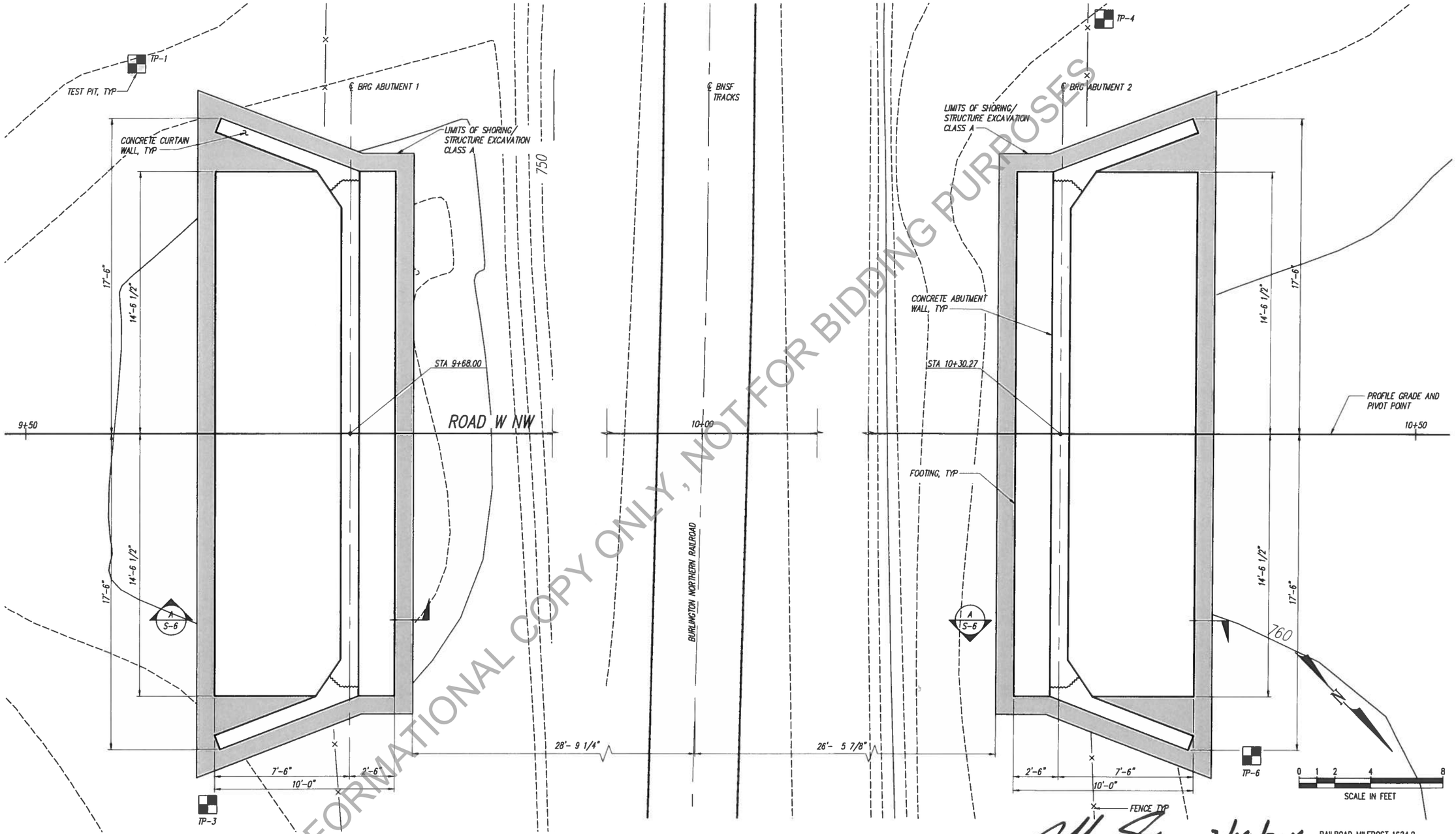

FOUNDATION PLAN

SCALE: 3/8"=1'-0"

3/14/2016

Approved for Construction
Grant County, Road Engineer

Date

RAILROAD MILEPOST 1624.9
COLUMBIA RIVER SUBDIVISION
TRINIDAD, WASHINGTON – GRANT COUNTY
47°15'15" N 119°58'55" W

INFORMATIONAL COPY ONLY, NOT FOR BIDDING PURPOSES

DESIGNED BY	JRL	11/20/14			
ENTERED BY	TLA	11/20/14			
CHECKED BY	AMS	11/20/14			
PROJ. ENGR.	DKM	11/20/14			
REGIONAL ADM.					
		DATE	DATE	REVISION	BY

REGION NO. | STATE: WASH | FED.AID PROJ.NO.: BROS-2013(078)

JOB NUMBER: CRP13-02

CONTRACT NO.

CALL TWO BUSINESS DAYS BEFORE YOU DIG 1-800-424-5555

IZZAT H. HASAYEN, STATE OF WASHINGTON, 28933, STRUCTURAL ENGINEER, PROFESSIONAL ENGINEER 11/20/2014

kpff Consulting Engineers
1601 Fifth Avenue, Suite 1600
Seattle, Washington 98101
(206) 622-5822 Fax (206) 622-8130

GRANT COUNTY

GRANT COUNTY
BRIDGE #399 REPLACEMENT

FOUNDATION LAYOUT

S-4

SHEET 9 OF 21 SHEETS

Drafter: MikeG Date: Mar 06, 2015-08:14am
Path: V:\113154 (Grant Co. Bridge No. 399)\Design\GC_S-4.dwg
Xref: | KPFF-1_x22341b | BR #399 profile_Altered | br#399_KPFF Altered | br #99 plan view |

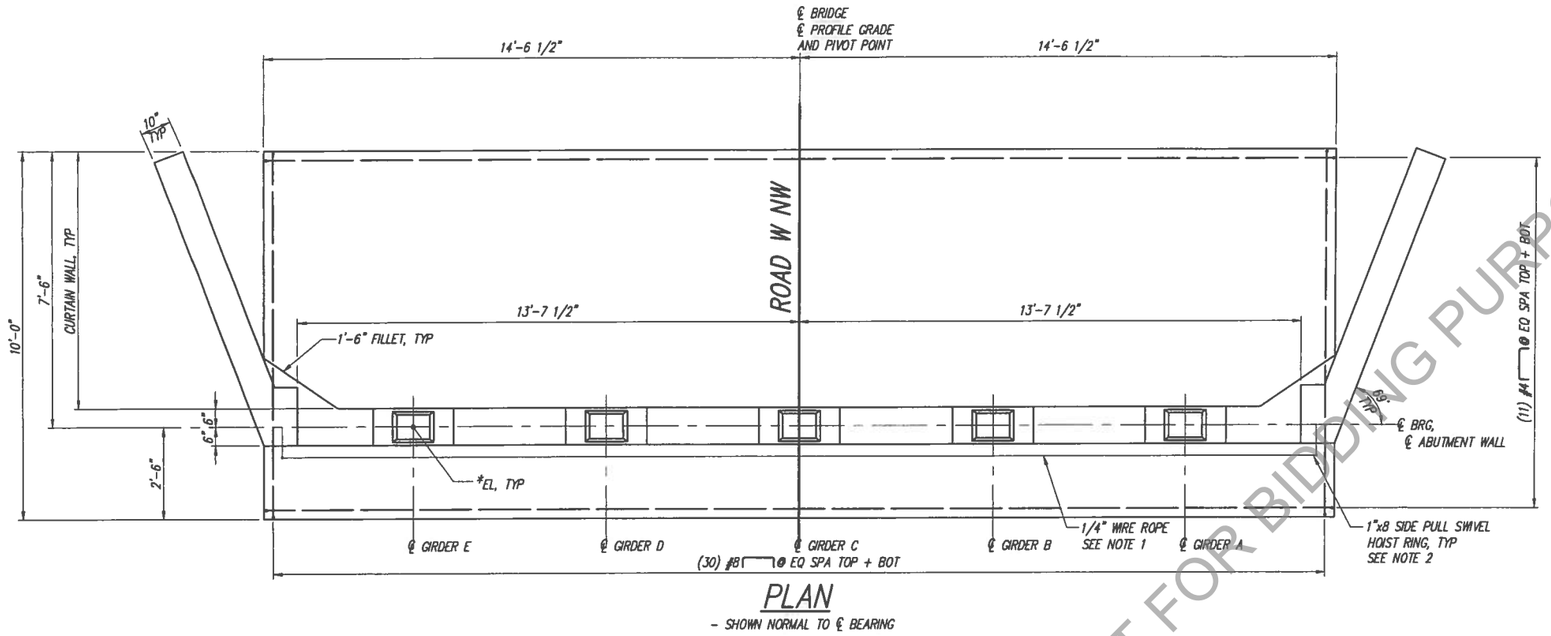

PLAN

- SHOWN NORMAL TO ℄ BEARING

TOP OF GROUT PAD ELEVATION TABLE					
GIRDER	A	B	C	D	E
ABUTMENT 1	757.71	757.81	757.92	757.81	757.71
ABUTMENT 2	760.69	760.80	760.90	760.80	760.69

* ELEVATIONS SHOWN AT ℄ OF BEARING AND ℄ GIRDER.

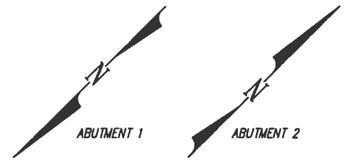

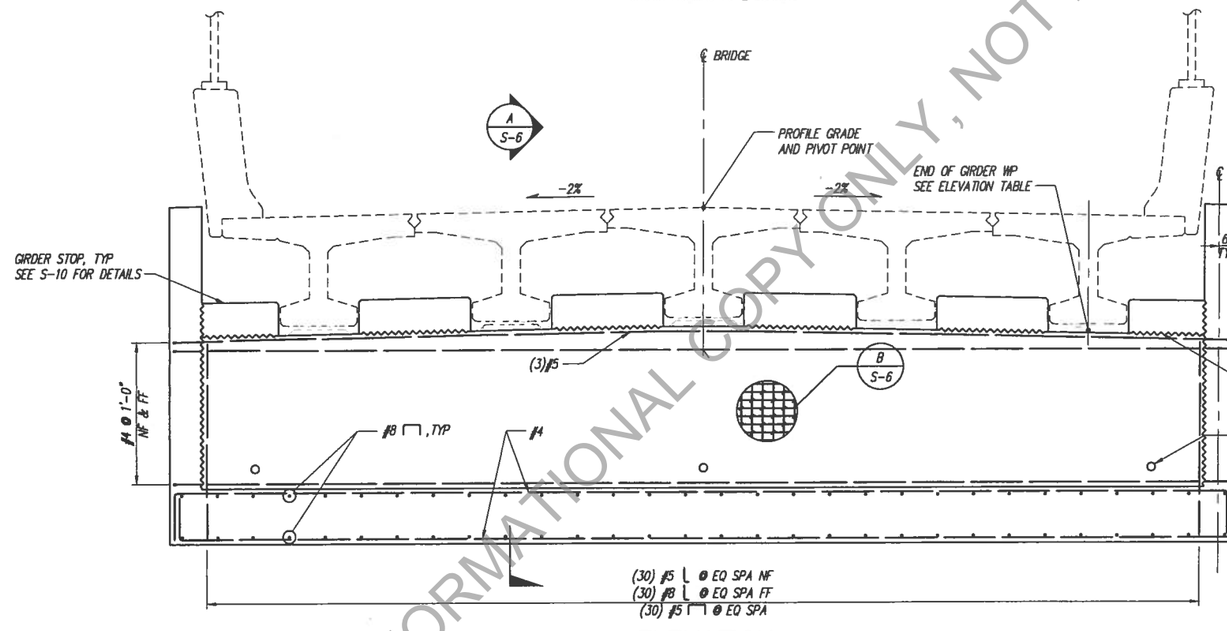

ELEVATION

- ABUTMENT 1 SHOWN, SIMILAR AT ABUTMENT 2
- SHOWN NORMAL TO ℄ BEARING

NOTES:

1. WIRE ROPE SHALL BE ¼" ø, INDEPENDENT WIRE ROPE CLASS (WRC) 6x19, EXTRA IMPROVED PLOW STEEL (EIPS). EACH LOT OF WORE ROPE SHALL BE ACCOMPANIED BY A MANUFACTURER'S CERTIFICATE OF COMPLIANCE, A MILL CERTIFICATE, AND A TEST REPORT SHOWING THE WIRE ROPE MEETS THE MINIMUM BREAKING FORCE REQUIREMENTS OF ASTM A1023.

   WIRE ROPE SHALL BE FASTENED TO ABUTMENT HOIST RING USING WIRE ROPE CLIPS AND THIMBLES IN ACCORDANCE WITH SECTION 6-02.3(17) F2 OF THE STANDARD SPECS.

2. HOIST RINGS SHALL HAVE A MINIMUM WORKING LOAD OF 7,100 LBS. EACH LOT OF HOIST RINGS SHALL BE ACCOMPANIED BY A MANUFACTURER'S CERTIFICATE OF COMPLIANCE, A MILL CERTIFICATE, AND A TEST REPORT SHOWING THE HOIST RING MEETS THE REQUIREMENTS OF MIL-STD-1365B AND MIL-STD-209J.

0 5 10 15
SCALE IN FEET

Approved for Construction
Grant County, Road Engineer

3/19/2015
Date

RAILROAD MILEPOST 1624.9
COLUMBIA RIVER SUBDIVISION
TRINIDAD, WASHINGTON - GRANT COUNTY
47°15'15" N 119°58'55" W

INFORMATIONAL COPY ONLY, NOT FOR BIDDING PURPOSES

DESIGNED BY	JRL	11/20/14			
ENTERED BY	TLA	11/20/14			
CHECKED BY	AMS	11/20/14			
PROJ. ENGR.	DKM	11/20/14			
REGIONAL ADM.					
		DATE	DATE	REVISION	BY

REGION NO. | STATE: WASH | JOB NUMBER: CRP13-02 | CONTRACT NO.

FED.AID PROJ.NO.: BROS-2013(078)

CALL TWO BUSINESS DAYS BEFORE YOU DIG 1-800-424-5555

11/20/14

kpff Consulting Engineers
1601 Fifth Avenue, Suite 1600
Seattle, Washington 98101
(206) 622-5822 Fax (206) 622-8130

GRANT COUNTY
BRIDGE #399 REPLACEMENT

ABUTMENT PLAN AND ELEVATION

S-5

SHEET 10 OF 21 SHEETS

Drafter: MikeG Date: Mar 06, 2015-08:15am
Path: V:\713154 (Grant Co. Bridge No. 399)\Design\GC_S-5.dwg
Xref: | XPFF-1_x2234tb |

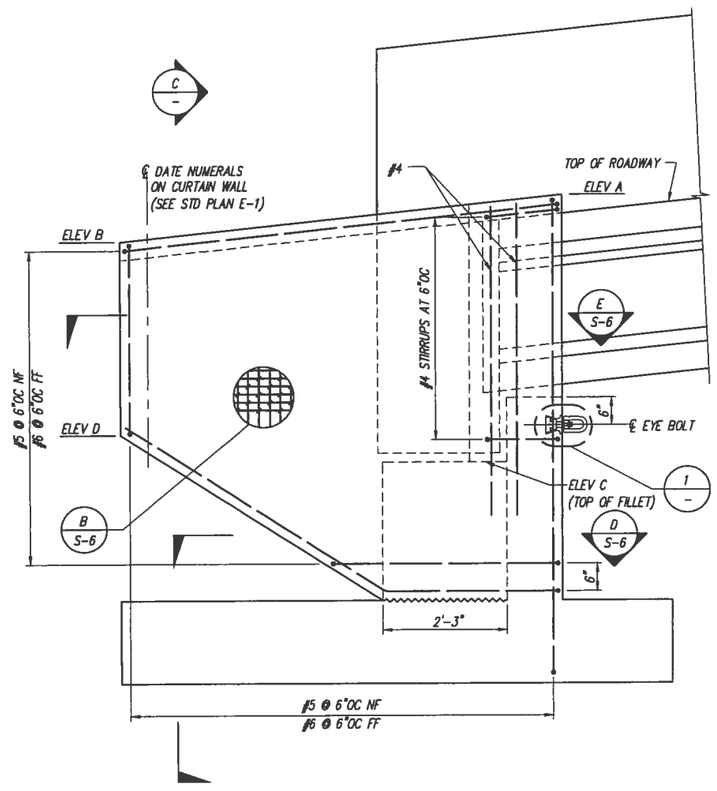

CURTAIN WALL 1

SCALE: 3/4" = 1'-0"

NOTE: ABUTMENT 1 SW SHOWN. SIMILAR AT OTHER CURTAIN WALLS.

CURTAIN WALL LOCATION	ELEV A	ELEV B	ELEV C	ELEV D
ABUTMENT 1 SW	761.32	760.54	756.57	757.00
ABUTMENT 1 SE	761.29	760.57	756.57	757.00
ABUTMENT 2 NW	764.24	764.28	759.52	760.00
ABUTMENT 2 NE	764.24	764.28	759.52	760.00

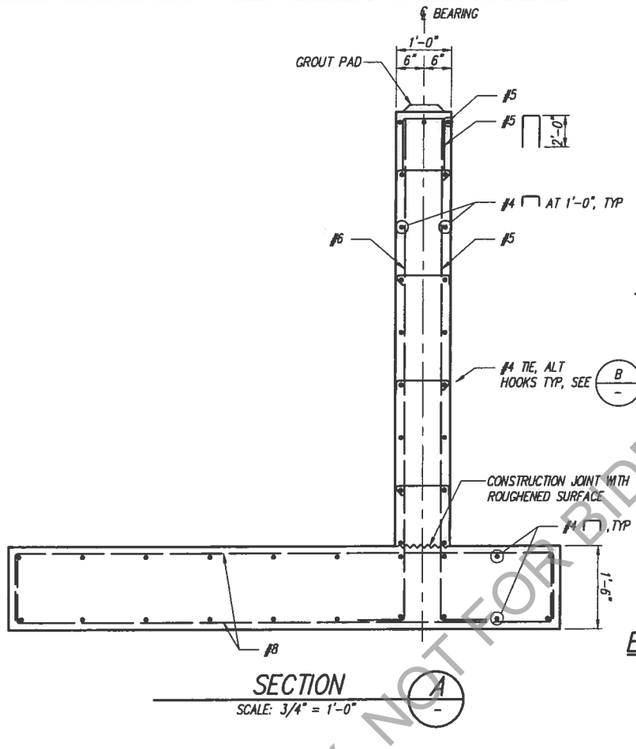

SECTION A

SCALE: 3/4" = 1'-0"

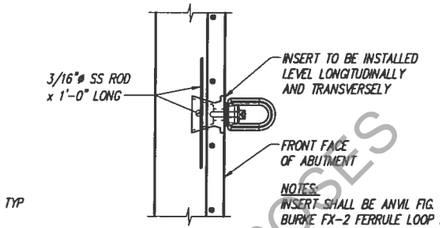

NOTES:
INSERT SHALL BE ANVIL FIG. 286, MEADOW BURKE FX-2 FERRULE LOOP INSERT DAYTON SUPERIOR F64 FERRULE LOOP INSERT OR APPROVED EQUAL.

CONCRETE INSERT DETAIL 1

SCALE: 1 1/2" = 1'-0"

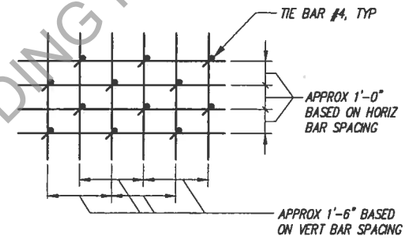

ELEVATION TIE SPACING DETAIL B

NTS

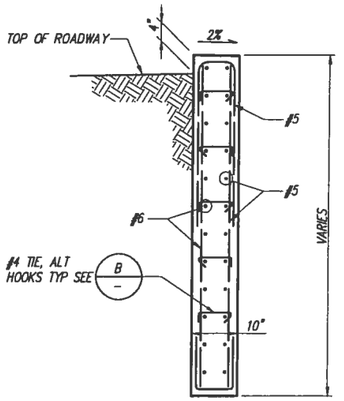

SECTION C

SCALE: 3/4" = 1'-0"

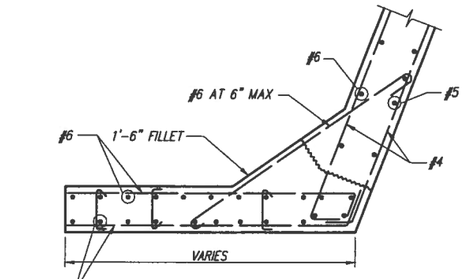

SECTION D

SCALE: 3/4" = 1'-0"

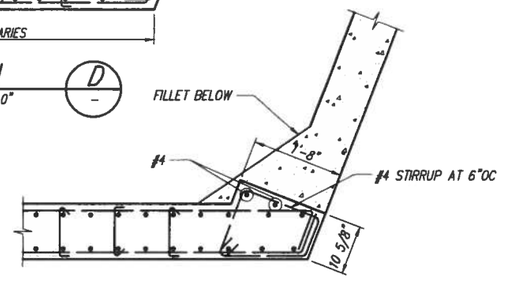

SECTION E

SCALE: 3/4" = 1'-0"

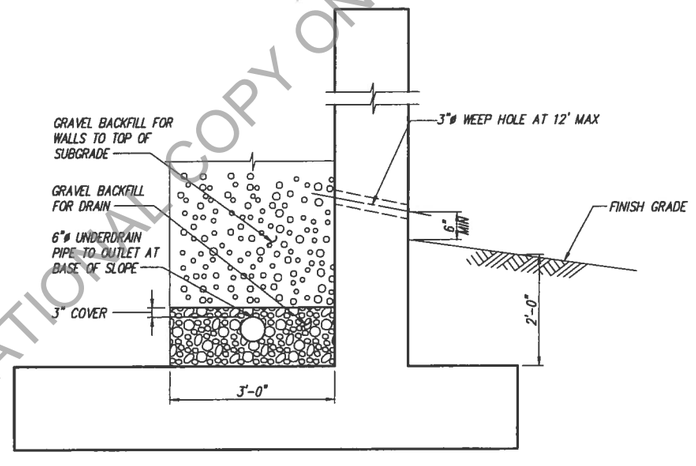

DRAINAGE DETAIL

SCALE: 3/4" = 1'-0"

INFORMATIONAL COPY ONLY, NOT FOR BIDDING PURPOSES

3/14/2016
Approved for Construction — Date
Grant County, Road Engineer

RAILROAD MILEPOST 1624.9
COLUMBIA RIVER SUBDIVISION
TRINIDAD, WASHINGTON - GRANT COUNTY
47°15'15" N 119°58'55" W

DESIGNED BY	JRL	11/20/14			
ENTERED BY	TLA	11/20/14			
CHECKED BY	AMS	11/20/14			
PROJ. ENGR.	DKM	11/20/14			
REGIONAL ADM.					
		DATE	DATE	REVISION	BY

REGION NO. | STATE: WASH | FED.AID PROJ.NO.: BROS-2013(078)
JOB NUMBER: CRP13-02
CONTRACT NO.

CALL TWO BUSINESS DAYS BEFORE YOU DIG 1-800-424-5555

11/20/2014

kpff Consulting Engineers
1601 Fifth Avenue, Suite 1600
Seattle, Washington 98101
(206) 622-5822 Fax (206) 622-8130

GRANT COUNTY
BRIDGE #399 REPLACEMENT

S-6

ABUTMENT DETAILS

SHEET 11 OF 21 SHEETS

Drafter: MikeG Date: Mar 06, 2015-08:15am
Path: V:\113154 (Grant Co. Bridge No. 399)\Design\GC_S-6.dwg
Xref: | XPFF-1_x22341b

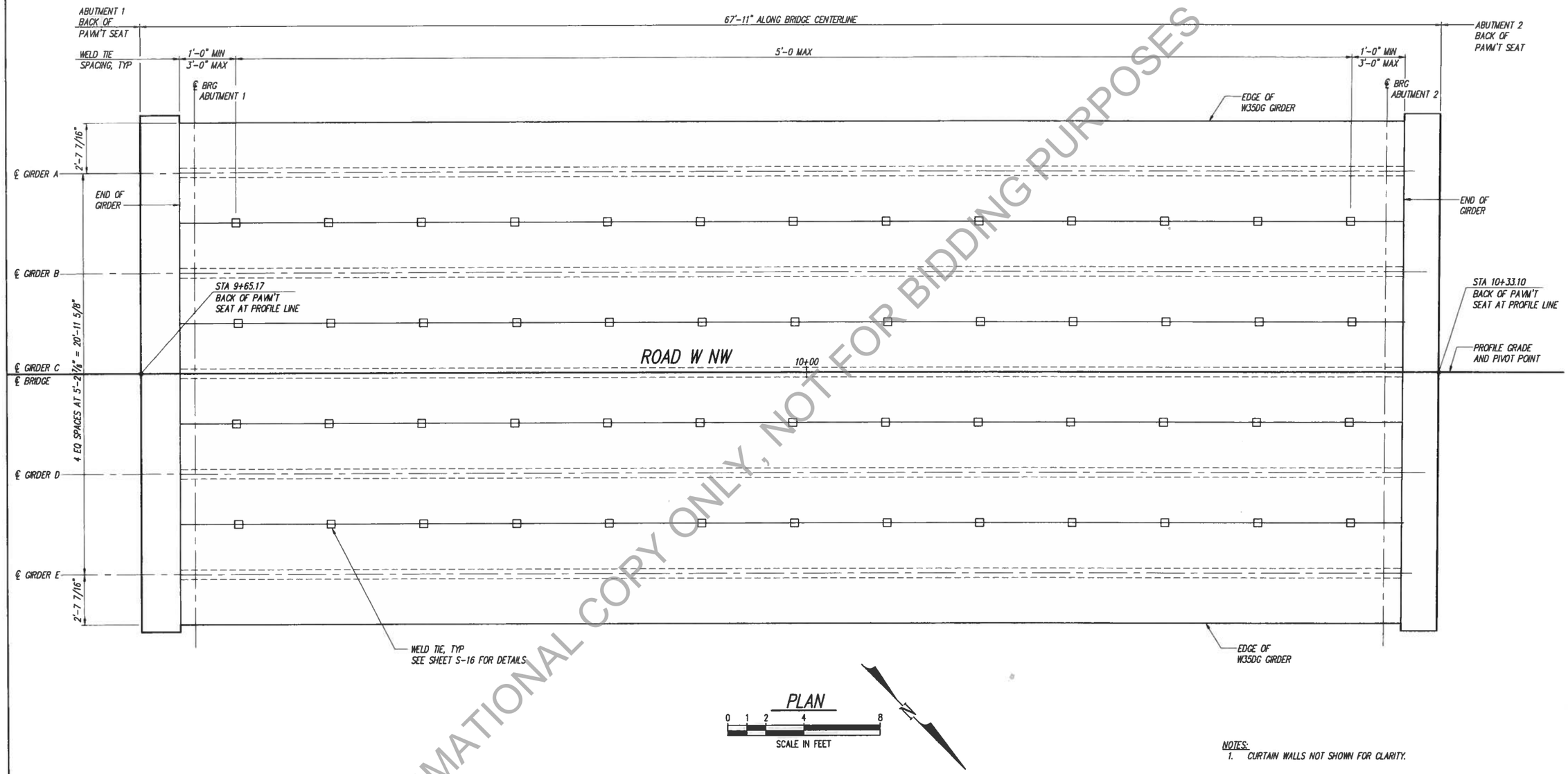

INFORMATIONAL COPY ONLY, NOT FOR BIDDING PURPOSES

NOTES:
1. CURTAIN WALLS NOT SHOWN FOR CLARITY.

3/19/2015

Approved for Construction Date
Grant County, Road Engineer

RAILROAD MILEPOST 1624.9
COLUMBIA RIVER SUBDIVISION
TRINIDAD, WASHINGTON – GRANT COUNTY
47°15'15" N 119°58'55" W

DESIGNED BY	WBC	11/20/14			
ENTERED BY	TLA	11/20/14			
CHECKED BY	AMS	11/20/14			
PROJ. ENGR.	DKM	11/20/14			
REGIONAL ADM.					
		DATE	DATE	REVISION	BY

REGION NO. | STATE WASH | FED.AID PROJ.NO. BROS-2013(078)

JOB NUMBER CRP13-02

CONTRACT NO

CALL TWO BUSINESS DAYS BEFORE YOU DIG 1-800-424-5555

IZZAT H. HASAYEN STATE OF WASHINGTON 28933 PROFESSIONAL ENGINEER 11/20/2014

kpff Consulting Engineers
1601 Fifth Avenue, Suite 1600
Seattle, Washington 98101
(206) 622-5822 Fax (206) 622-8130

GRANT COUNTY

GRANT COUNTY
BRIDGE #399 REPLACEMENT

FRAMING PLAN

S-7

SHEET 12 OF 21 SHEETS

Drafter: MikeG Date: Mar 06, 2015-08:15am
Path: V:\113154 (Grant Co. Bridge No. 399)\Design\GC_S-7.dwg
Xref: | KPFF-1_x22341b | br#399_KPFF Altered |

GIRDER SCHEDULE

SPAN	GIRDER	L	LL	LT	θ1 (DEG)	θ2 (DEG)	P1	P2	PLAN LENGTH (ALONG GIRDER GRADE)	MIN. CONC. COMP. STRENGTH @ FINAL f'c (KSI)	MIN. CONC. COMP. STRENGTH @ RELEASE f'ci (KSI)	HARPED NO. OF STRANDS	HARPED JACKING FORCE (KIPS)	STRAIGHT NO. OF STRANDS	STRAIGHT JACKING FORCE (KIPS)	LOCATION OF C.G. STRANDS E	LOCATION OF C.G. STRANDS F℄	LOCATION OF C.G. STRANDS Fb	LOCATION OF C.G. STRANDS Fo	CAMBER C	CAMBER D @ 40 DAYS	CAMBER D @ 120 DAYS	D LOWER BOUND @ 40 DAYS	D UPPER BOUND @ 120 DAYS
1	A–E	3.0 FT	3.0 FT	3.0 FT	90	90	11.0 IN	11.0 IN	64'–2"	7.0	6.0	4	175.77	12	527.31	2.67	4.00	4.00	5.00	0.25 IN	0.74 IN	1.72 IN	–	–

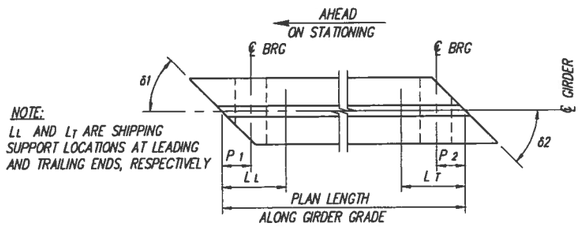

NOTE:
LL AND LT ARE SHIPPING SUPPORT LOCATIONS AT LEADING AND TRAILING ENDS, RESPECTIVELY

SAWTEETH ARE FULL WIDTH

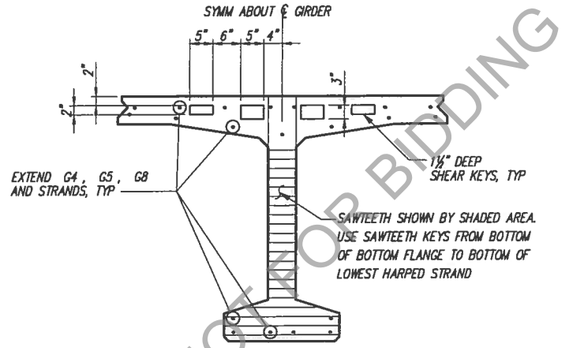

GIRDER END
NTS

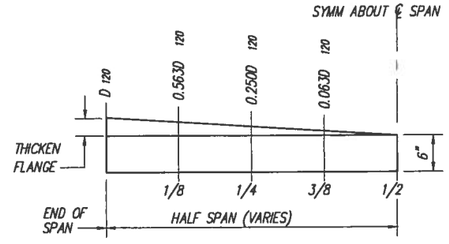

GIRDER FLANGE THICKENING
NTS

THICKEN FLANGE TO COMPENSATE FOR CAMBER DUE TO PRESTRESS. FLANGE THICKNESS SHOWN IS AT CL OF SPAN
(SEE NOTE 1 ON SHT S12)

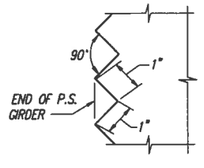

SAWTEETH DETAILS
NTS

SAWTEETH ARE FULL WIDTH

GIRDER NOTES

1. PLAN LENGTH SHALL BE INCREASED AS NECESSARY TO COMPENSATE FOR SHORTENING DUE TO PRESTRESS AND SHRINKAGE.
2. ALL PRETENSIONED AND TEMPORARY STRANDS SHALL BE 0.6"ø AASHTO M203 GRADE 270 LOW RELAXATION STRANDS, JACKED TO 202.5 KSI.
3. CUT ALL STRANDS FLUSH WITH THE GIRDER ENDS AND PAINT WITH AN APPROVED EPOXY RESIN, EXCEPT FOR EXTENDED STRANDS AS SHOWN ON S–9.
4. THE TOP SURFACE OF THE GIRDER FLANGE SHALL BE ROUGHENED IN ACCORDANCE WITH SECTION 6–02.3(25)H OF THE STANDARD SPECIFICATIONS.
5. LIFTING EMBEDMENTS SHALL BE INSTALLED IN ACCORDANCE WITH SECTION 6–02.3(25)L OF THE STANDARD SPECIFICATIONS.
6. CAUTION SHALL BE EXERCISED IN HANDLING AND PLACING GIRDERS. ALL GIRDERS SHALL BE CHECKED BY THE CONTRACTOR TO ENSURE THAT THEY ARE BRACED ADEQUATELY TO PREVENT TIPPING AND TO CONTROL LATERAL BENDING DURING SHIPPING. ONCE ERECTED, ALL GIRDERS SHALL BE BRACED LATERALLY TO PREVENT TIPPING UNTIL THE DIAPHRAGMS ARE CAST AND CURED.
7. FORMS FOR BEARING PAD RECESSES SHALL BE CONSTRUCTED AND FASTENED IN SUCH A MANNER AS TO NOT CAUSE DAMAGE TO THE GIRDER DURING THE STRAND RELEASE OPERATION.

INFORMATIONAL COPY ONLY, NOT FOR BIDDING PURPOSES

Approved for Construction
Grant County, Road Engineer
3/14/2015
Date

RAILROAD MILEPOST 1624.9
COLUMBIA RIVER SUBDIVISION
TRINIDAD, WASHINGTON – GRANT COUNTY
47°15'15" N 119°58'55" W

DESIGNED BY	WBC	11/20/14			
ENTERED BY	TLA	11/20/14			
CHECKED BY	AMS	11/20/14			
PROJ. ENGR.	DKM	11/20/14			
REGIONAL ADM.					
		DATE	DATE	REVISION	BY

REGION NO. | STATE WASH | FED.AID PROJ.NO. BROS–2013(078)
JOB NUMBER CRP13–02
CONTRACT NO.

CALL TWO BUSINESS DAYS BEFORE YOU DIG 1–800–424–5555

11/20/2014

kpff Consulting Engineers
1601 Fifth Avenue, Suite 1600
Seattle, Washington 98101
(206) 622-5822 Fax (206) 622-8130

GRANT COUNTY
BRIDGE #399 REPLACEMENT

GIRDER DETAILS 1

S-8

SHEET 13 OF 21 SHEETS

Drafter: MikeG Date: Mar 06, 2015–08:15am
Path: V:\11354 (Grant Co. Bridge No. 399)\Design\GC_S–8.dwg
Xref: | XPFF–1_x22341b |

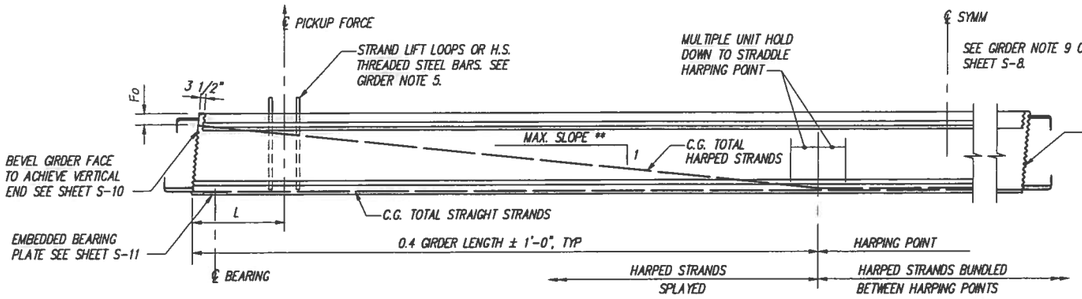

END TYPE A

GIRDER ELEVATION

NTS

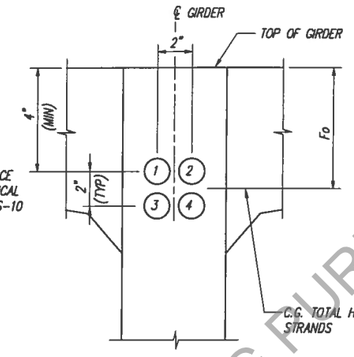

STRAND PATTERN AT GIRDER END

NTS

STRAND LOCATION SEQUENCE SHALL BE AS SHOWN (1), (2) ETC.

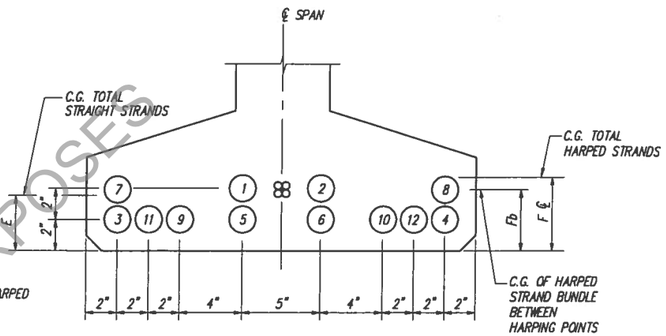

STRAND PATTERN AT ℄ SPAN

NTS

STRAND LOCATION SEQUENCE SHALL BE AS SHOWN (1), (2) ETC.

#3 OR #4 BARS MAY BE USED IN LIEU OF W12. FIELD BEND IS OPTIONAL.

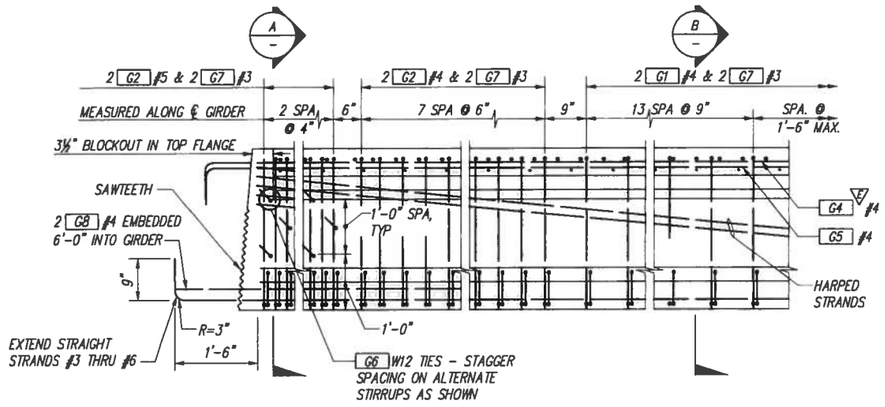

TYPICAL END ELEVATION

NTS

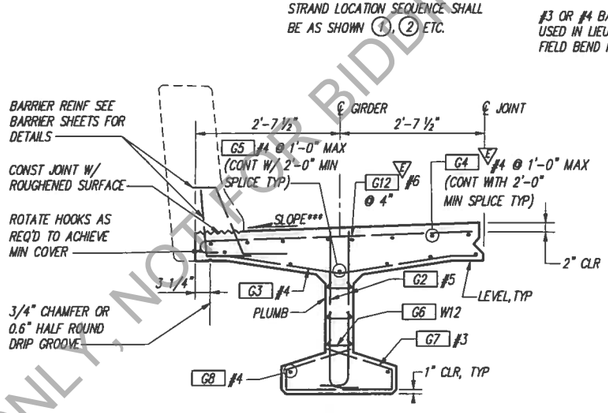

SECTION A

NTS

EXTERIOR GIRDER SHOWN
INTERIOR GIRDER SIMILAR

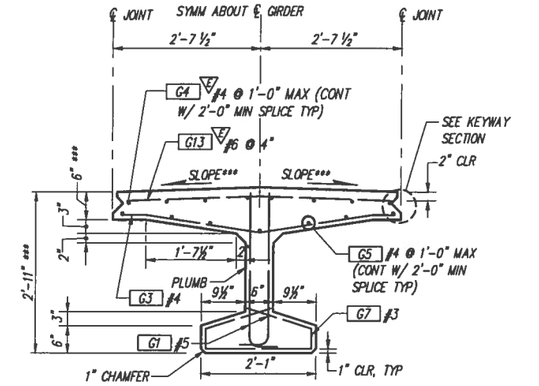

SECTION B

NTS

INTERIOR GIRDER SHOWN
EXTERIOR GIRDER SIMILAR

BENDING DIAGRAM (ALL DIMENSIONS ARE OUT TO OUT)

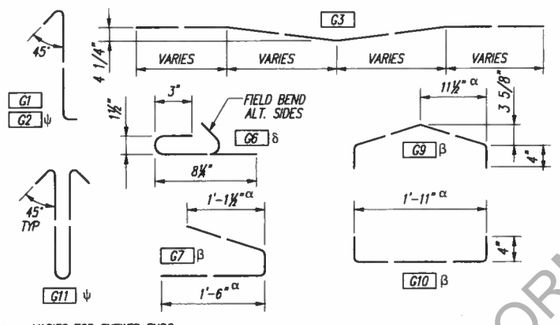

α - VARIES FOR SKEWED ENDS.
δ - #3 OR #4 MAY BE SUBSTITUTED. FIELD BENDING IS OPTIONAL.
β - PAIRS OF G10 BARS, OR G10 AND G10 BARS, MAY BE USED INTERCHANGEABLY AS BOTTOM FLANGE TIES.
ψ - 1 G11 MAY BE SUBSTITUTED FOR 2 G2 WITHIN THE V1 SPA @ V2.

** 8 : 1 MAXIMUM SLOPE FOR EACH HARPED STRAND

*** THICKEN FLANGE TO COMPENSATE FOR CROSS SLOPE AND CAMBER FLANGE THICKNESS SHOWN IS AT ℄ OF SPAN. FOR FLANGE THICKNESS ALONG GIRDER SEE GIRDER FLANGE THICKENING DETAIL ON SHEET S-8.

▽ DENOTES EPOXY COATED

INFORMATIONAL COPY ONLY, NOT FOR BIDDING PURPOSES

3/14/2015
Approved for Construction — Date
Grant County, Road Engineer

RAILROAD MILEPOST 1624.9
COLUMBIA RIVER SUBDIVISION
TRINIDAD, WASHINGTON - GRANT COUNTY
47°15'15" N 119°58'55" W

DESIGNED BY	WBC	11/20/14			
ENTERED BY	TLA	11/20/14			
CHECKED BY	AMS	11/20/14			
PROJ. ENGR.	DKM	11/20/14			
REGIONAL ADM.					
		DATE	DATE	REVISION	BY

REGION NO. | STATE: WASH | FED.AID PROJ.NO.: BROS-2013(078)
JOB NUMBER: CRP13-02
CONTRACT NO.

CALL TWO BUSINESS DAYS BEFORE YOU DIG 1-800-424-5555

kpff Consulting Engineers
1601 Fifth Avenue, Suite 1600
Seattle, Washington 98101
(206) 622-5822 Fax (206) 622-8130

GRANT COUNTY
BRIDGE #399 REPLACEMENT

GIRDER DETAILS 2

S-9

SHEET 14 OF 21 SHEETS

Drafter: MikeG Date: Mar 06, 2015-08:15am
Path: V:\113154 (Grant Co. Bridge No. 399)\Design\GC_S-9.dwg
Xref: KPFF-1_x22341b

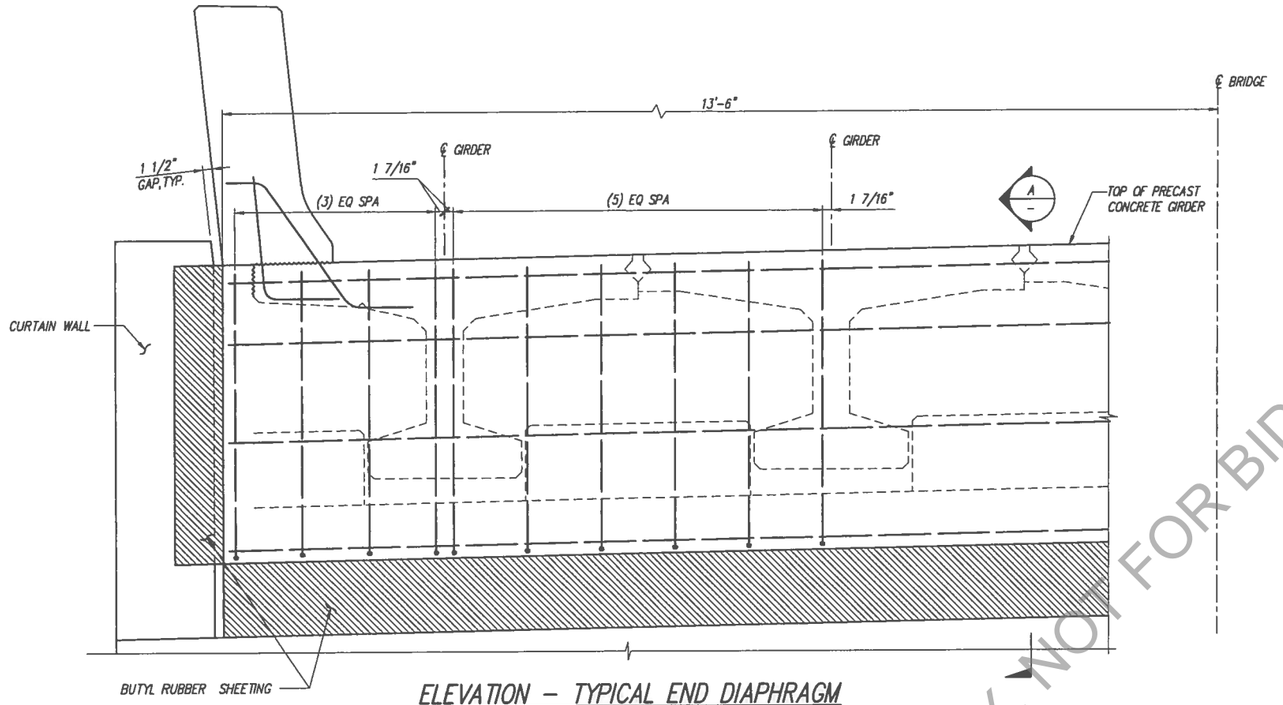

ELEVATION – TYPICAL END DIAPHRAGM
SCALE: 1"=1'-0"

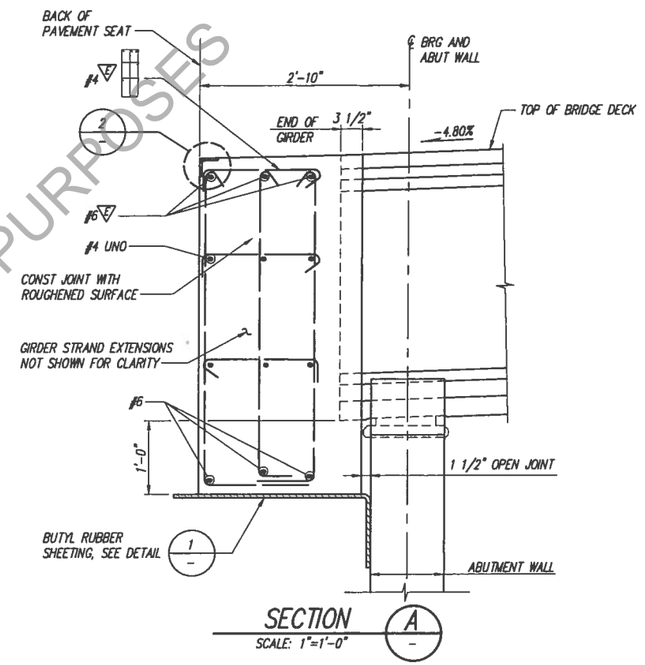

SECTION A
SCALE: 1"=1'-0"

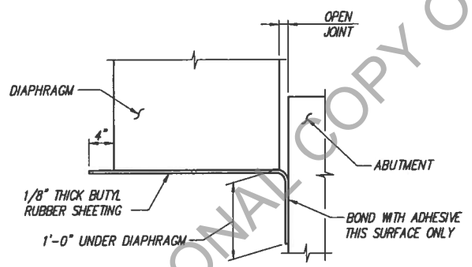

BUTYL RUBBER AT DIAPHRAGM DETAIL 1
SCALE: 1"=1'-0"

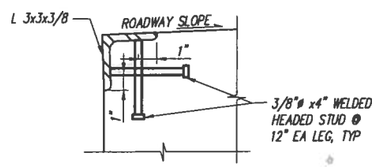

PAVEMENT ARMOR DETAIL 2
SCALE: 3"=1'-0"

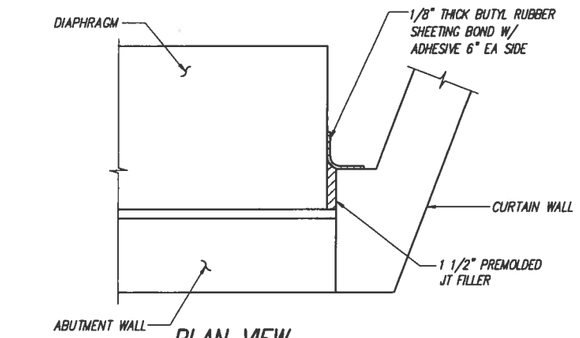

PLAN VIEW
BUTYL RUBBER AT DIAPHRAGM 3
SCALE: 1"=1'-0"

INFORMATIONAL COPY ONLY, NOT FOR BIDDING PURPOSES

3/19/2015
Approved for Construction — Date
Grant County, Road Engineer

RAILROAD MILEPOST 1624.9
COLUMBIA RIVER SUBDIVISION
TRINIDAD, WASHINGTON – GRANT COUNTY
47°15'15" N 119°58'55" W

DESIGNED BY	JRL	11/20/14			
ENTERED BY	TLA	11/20/14			
CHECKED BY	AMS	11/20/14			
PROJ. ENGR.	DKM	11/20/14			
REGIONAL ADM.					
		DATE	DATE	REVISION	BY

REGION NO. | STATE: WASH | JOB NUMBER: CRP13-02 | CONTRACT NO. | FED.AID PROJ.NO.: BROS-2013(078)

CALL TWO BUSINESS DAYS BEFORE YOU DIG 1-800-424-5555

ISAAC H. HASLEN — STATE OF WASHINGTON — 22833 — REGISTERED PROFESSIONAL ENGINEER — 11/20/2014

kpff Consulting Engineers
1501 Fifth Avenue, Suite 1600
Seattle, Washington 98101
(206) 622-5822 Fax (206) 622-8130

GRANT COUNTY

GRANT COUNTY
BRIDGE #399 REPLACEMENT

END DIAPHRAGM AND GIRDER STOPS

S-10

SHEET 15 OF 21 SHEETS

Drafter: MikeG Date: Mar 06, 2015-08:15am
Path: V:\113154 (Grant Co. Bridge No. 399)\Design\GC_S-10.dwg
Xref: KPFF-1_x22341b

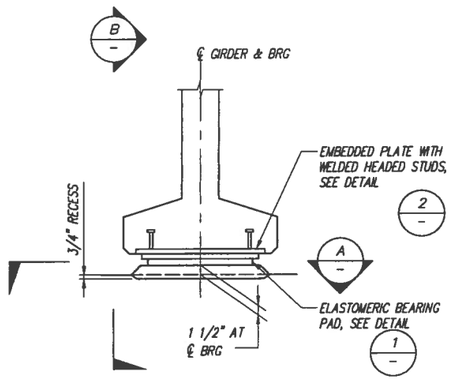

GROUT PAD ELEVATION
NTS

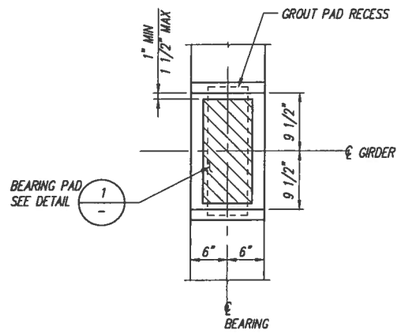

GROUT PAD PLAN A
NTS

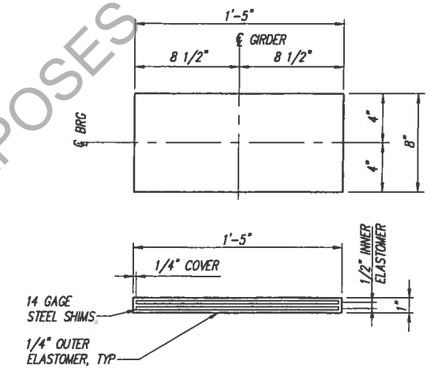

ELASTOMERIC BEARING PAD DETAILS 1
NTS

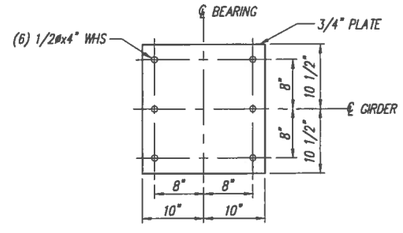

EMBEDDED PLATE DETAIL 2
NTS

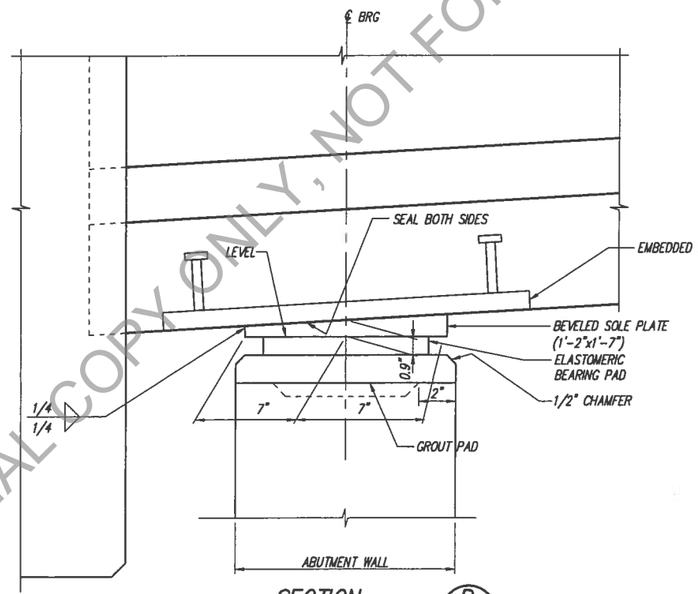

SECTION B
SCALE: 3" = 1'-0"

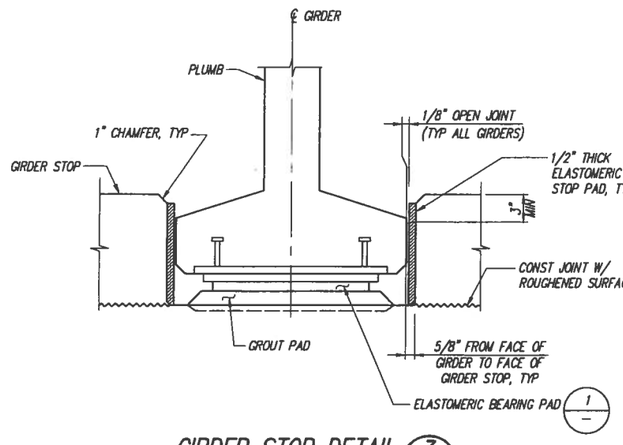

GIRDER STOP DETAIL 3
NTS
S-10

BEARING DESIGN TABLE	
SERVICE - 1 LIMIT STATE	
DEAD LOAD REACTION	45 KIPS
LIVE LOAD REACTION W/O IMPACT	55 KIPS
UNLOADED HEIGHT	1.15 IN
LOADED HEIGHT	1.11 IN

NOTES:
1. GIRDER STOPS SHALL BE CONSTRUCTED AFTER GIRDER PLACEMENT.
2. THE ELASTOMERIC STOP PADS SHALL BE CEMENTED TO GIRDER STOPS WITH APPROVED ADHESIVE.
3. ELASTOMER SHALL HAVE A SHEAR MODULUS OF ELASTICITY OF 165 PSI AT 73° F.

Approved for Construction
Grant County, Road Engineer
Date 3/19/2015

RAILROAD MILEPOST 1624.9
COLUMBIA RIVER SUBDIVISION
TRINIDAD, WASHINGTON - GRANT COUNTY
47°15'15" N 119°58'55" W

INFORMATIONAL COPY ONLY; NOT FOR BIDDING PURPOSES

DESIGNED BY	WBC	11/20/14			REGION NO.	STATE
ENTERED BY	TLA	11/20/14				WASH
CHECKED BY	AMS	11/20/14			JOB NUMBER	FED.AID PROJ.NO.
PROJ. ENGR.	DKM	11/20/14			CRP13-02	BROS-2013(078)
REGIONAL ADM.					CONTRACT NO.	
		DATE	DATE	REVISION	BY	

CALL TWO BUSINESS DAYS BEFORE YOU DIG 1-800-424-5555

ISAAC H. HASVEN STATE OF WASHINGTON 22833 PROFESSIONAL ENGINEER 11/20/2014

kpff Consulting Engineers
1601 Fifth Avenue, Suite 1600
Seattle, Washington 98101
(206) 622-5822 Fax (206) 622-8130

GRANT COUNTY

GRANT COUNTY
BRIDGE #399 REPLACEMENT

BEARINGS AND DIAPHRAGMS 2

S-11

SHEET 16 OF 21 SHEETS

Drafter: MikeG Date: Mar 06, 2015-08:15am
Path: V:\113154 (Grant Co. Bridge No. 399)\Design\GC_S-11.dwg
Xref: | XPFF-1_X2334tb |

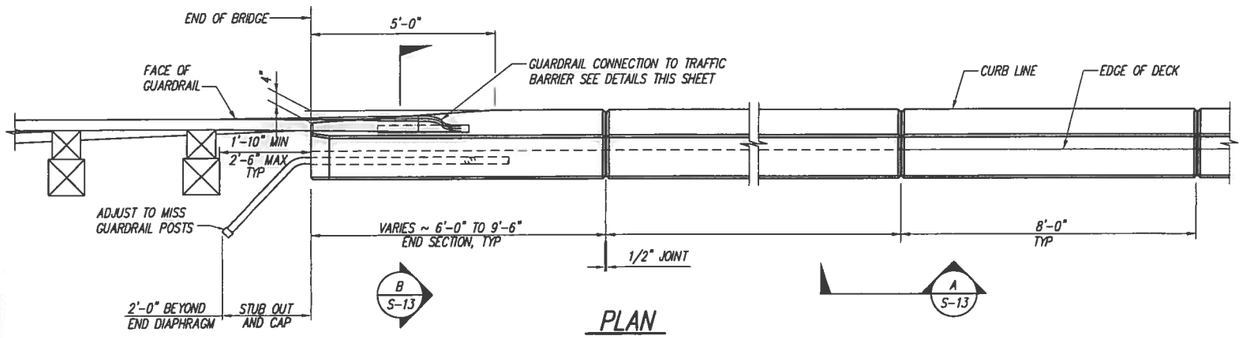

PLAN
TRAFFIC BARRIER

NTS

BARRIER CONTINUOUS BETWEEN ROADWAY EXPANSION JOINTS. CONSTRUCTION JOINTS WITH SHEAR KEYS ARE PERMISSIBLE AT DUMMY JOINT LOCATIONS. FORM JOINTS BETWEEN DUMMY JOINTS SHALL NOT BE PERMITTED.

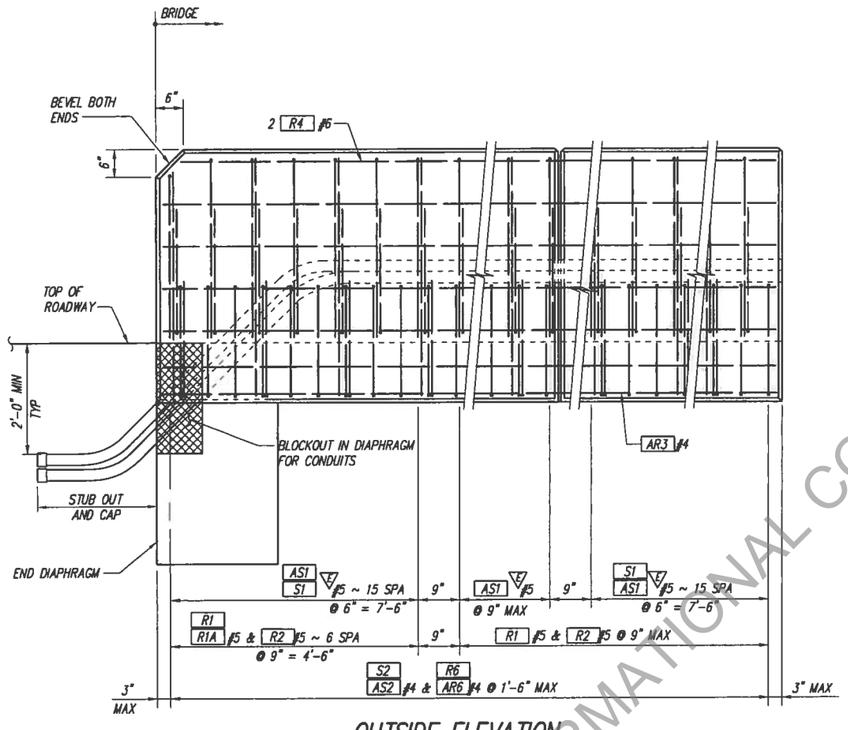

OUTSIDE ELEVATION
END OF TRAFFIC BARRIER

NTS

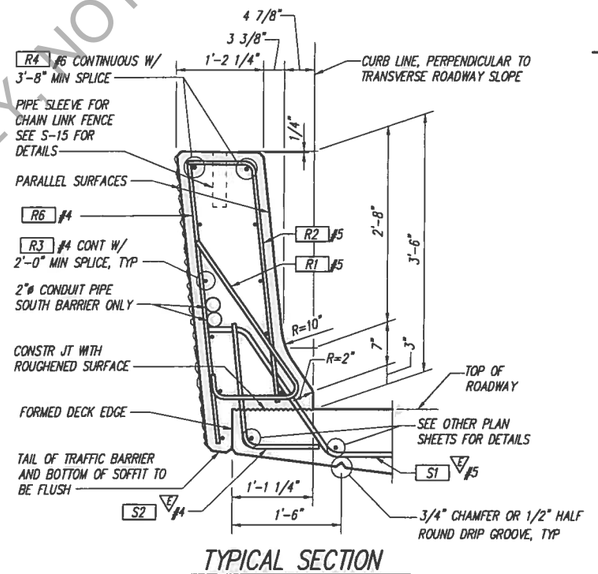

TYPICAL SECTION
TRAFFIC BARRIER

NTS

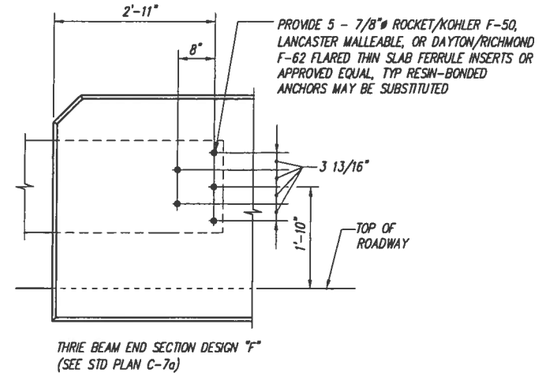

THRIE BEAM END SECTION DESIGN "F" (SEE STD PLAN C-7a)

OUTSIDE ELEVATION
TRAFFIC BARRIER - GUARDRAIL CONNECTION

NTS
(WHERE SHOWN ON LAYOUT)

INFORMATIONAL COPY ONLY - NOT FOR BIDDING PURPOSES

3/19/2015
Approved for Construction — Date
Grant County, Road Engineer

RAILROAD MILEPOST 1624.9
COLUMBIA RIVER SUBDIVISION
TRINIDAD, WASHINGTON - GRANT COUNTY
47°15'15" N 119°58'55" W

						REGION NO.	STATE	FED.AID PROJ.NO.
							WASH	
DESIGNED BY	JRL	11/20/14				JOB NUMBER		BROS-2013(078)
ENTERED BY	TLA	11/20/14				CRP13-02		
CHECKED BY	AMS	11/20/14				CONTRACT NO.		
PROJ. ENGR.	DKM	11/20/14						
REGIONAL ADM.								
		DATE	DATE	REVISION	BY			

CALL TWO BUSINESS DAYS BEFORE YOU DIG 1-800-424-5555

IVAN H. HASVER — STATE OF WASHINGTON — 20833 — STRUCTURAL ENGINEER — PROFESSIONAL ENGINEER — 11/20/2014

kpff Consulting Engineers
1601 Fifth Avenue, Suite 1600
Seattle, Washington 98101
(206) 622-5822 Fax (206) 622-8130

GRANT COUNTY

GRANT COUNTY
BRIDGE #399 REPLACEMENT

TRAFFIC BARRIER 1

S-12

SHEET 17 OF 21 SHEETS

Drafter: MikeC Date: Mar 06, 2015 - 10:15am
Path: V:\113154 (Grant Co. Bridge No. 399)\Design\CC_S-12.DWG
Xref: KPFF-1_x2234tb

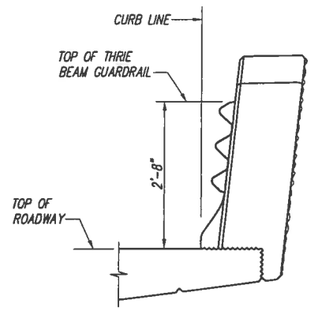

END VIEW
NTS
THRIE BEAM SHOWN WITH "D" CONNECTION

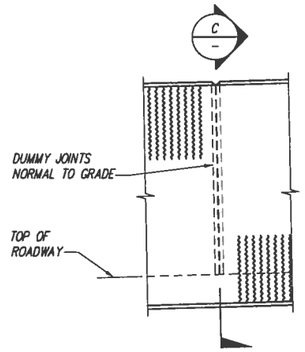

VIEW A (5-12)
NTS

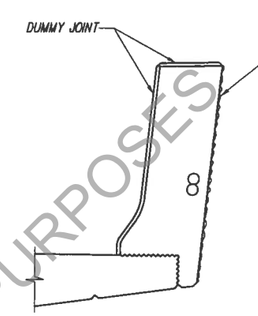

SECTION C (-)
NTS

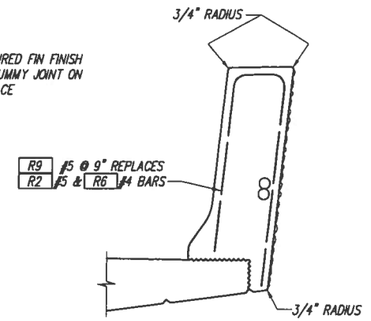

SLIPFORM ALTERNATE
NTS

SEE "TYPICAL SECTION – TRAFFIC BARRIER" FOR ADDITIONAL DETAILS

THE CONTRACTOR IS ADVISED THAT THE SLIPFORM CONSTRUCTION METHOD IS A PATENTED PROPRIETARY PROCESS FOR BARRIERS WITH A FRACTURED FIN FINISH.

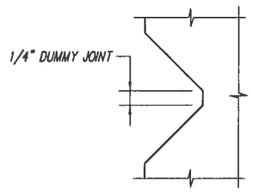

DUMMY JOINT DETAIL
NTS

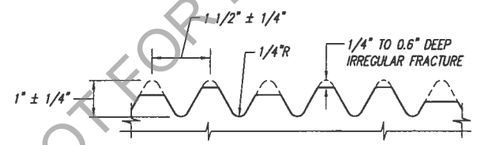

FRACTURED FIN FINISH
NTS

BENDING DIAGRAM

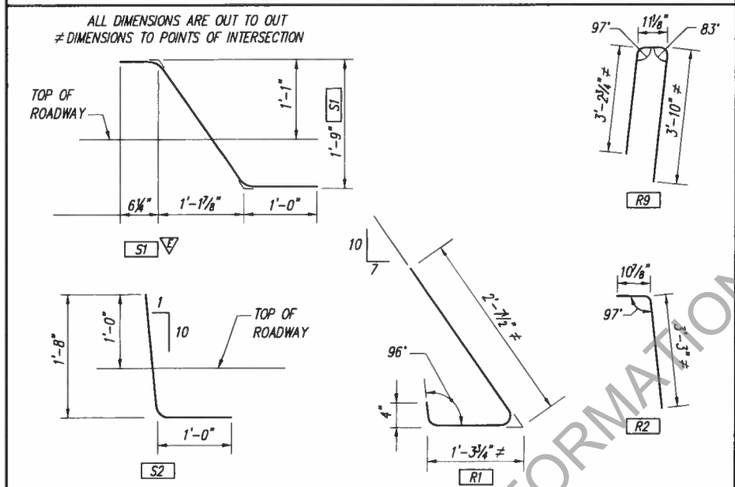

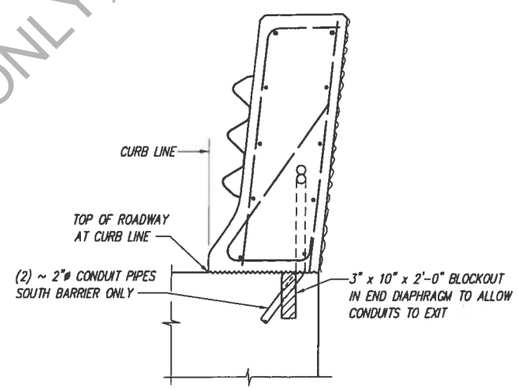

SECTION END DIAPHRAGM B (S-12)
NTS

FOR DETAILS NOT SHOWN SEE "OUTSIDE ELEVATION" AND "TYPICAL SECTION – TRAFFIC BARRIER"

INFORMATIONAL COPY ONLY, NOT FOR BIDDING PURPOSES

3/14/2015
Approved for Construction — Date
Grant County, Road Engineer

RAILROAD MILEPOST 1624.9
COLUMBIA RIVER SUBDIVISION
TRINIDAD, WASHINGTON – GRANT COUNTY
47°15'15" N 119°58'55" W

DESIGNED BY	JRL	11/20/14			REGION NO.	STATE
ENTERED BY	TLA	11/20/14				WASH
CHECKED BY	AMS	11/20/14			JOB NUMBER	
PROJ. ENGR.	DKM	11/20/14			CRP13-02	
REGIONAL ADM.					CONTRACT NO.	
	DATE	DATE	REVISION	BY		

FED.AID PROJ.NO.
BROS-2013(078)

CALL TWO BUSINESS DAYS BEFORE YOU DIG 1-800-424-5555

kpff Consulting Engineers
1601 Fifth Avenue, Suite 1600
Seattle, Washington 98101
(206) 622-5822 Fax (206) 622-8130

GRANT COUNTY
BRIDGE #399 REPLACEMENT

TRAFFIC BARRIER 2

S-13

SHEET 18 OF 21 SHEETS

Drafter: MikeG Date: Mar 06, 2015–10:15am
Path: V:\113154 (Grant Co. Bridge No. 399)\Design\GC_S-13.dwg
Xref: | KPFF-1_x2134tb |

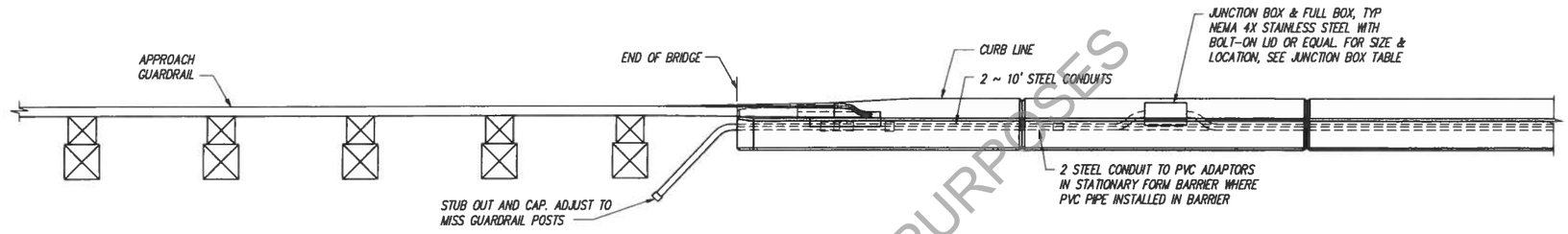

PLAN
TRAFFIC BARRIER

NTS

TYPICAL AT END OF MODIFIED TRAFFIC BARRIER END SECTION WHERE THRIE BEAM END SECTION "DESIGN F" STD. PLAN C-7a

JUNCTION BOX LOCATIONS	
STATION	OFFSET
9+71.00	12.0' LT
10+27.35	12.0' LT

JUNCTION BOX LOCATIONS SHOWN ARE APPROXIMATE. CENTER JUNCTION BOX INSTALLATION BETWEEN BARRIER DUMMY JOINTS.

INSTALL ALL CONDUIT RUNS TO DRAIN TO A BRIDGE END OR PROVIDE DRAIN AT ALL LOW POINTS IN CONDUIT RUN ON BRIDGE.

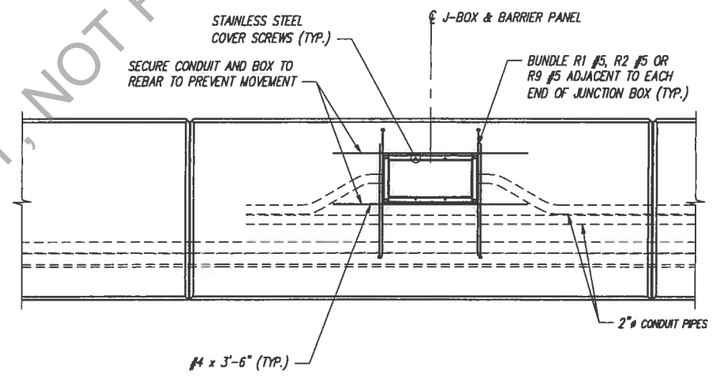

ELEVATION
CONDUITS & J-BOX IN TRAFFIC BARRIER

NTS

LABEL JUNCTION BOX COVER IN ACCORDANCE WITH STANDARD SPECIFICATION 9-29.2(4) AND SPECIAL PROVISIONS. ADJACENT JUNCTION BOXES ARE SHOWN CENTERED BETWEEN ADJACENT DUMMY JOINTS. IF THE DISTANCE BETWEEN ADJACENT DUMMY JOINTS IS 16'-0" OR GREATER, PLACE ADJACENT JUNCTION BOXES SYMMETRICALLY ON EITHER SIDE OF THE CENTER OF ONE DUMMY PANEL WHILE MAINTAINING 8'-0" MINIMUM BETWEEN CENTER LINES OF THE JUNCTION BOXES.

INFORMATIONAL COPY ONLY, NOT FOR BIDDING PURPOSES

3/19/2015
Approved for Construction — Date
Grant County, Road Engineer

RAILROAD MILEPOST 1624.9
COLUMBIA RIVER SUBDIVISION
TRINIDAD, WASHINGTON – GRANT COUNTY
47°15'15" N 119°58'55" W

					REGION NO.	STATE	FED.AID PROJ.NO.
						WASH	
DESIGNED BY JRL	11/20/14						
ENTERED BY TLA	11/20/14				JOB NUMBER		BROS-2013(078)
CHECKED BY AMS	11/20/14				CRP13-02		
PROJ. ENGR. DKM	11/20/14				CONTRACT NO.		
REGIONAL ADM.							
	DATE	DATE	REVISION	BY			

CALL TWO BUSINESS DAYS BEFORE YOU DIG 1-800-424-5555

kpff Consulting Engineers
1501 Fifth Avenue, Suite 1500
Seattle, Washington 98101
(206) 622-5822 Fax (206) 622-8130

GRANT COUNTY
BRIDGE #399 REPLACEMENT

TRAFFIC BARRIERS 3

S-14

SHEET 19 OF 21 SHEETS

Drafter: MikeG Date: Mar 06, 2015-08:15am
Path: V:\13\54 (Grant Co. Bridge No. 399)\Design\GC_S-14.DWG
Xref: | KPFF-1_x22341b |

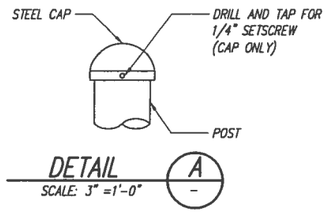

DETAIL A
SCALE: 3" =1'-0"

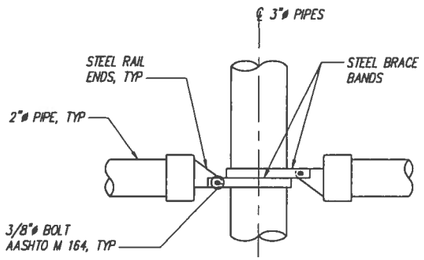

DETAIL B
SCALE: 3" =1'-0"

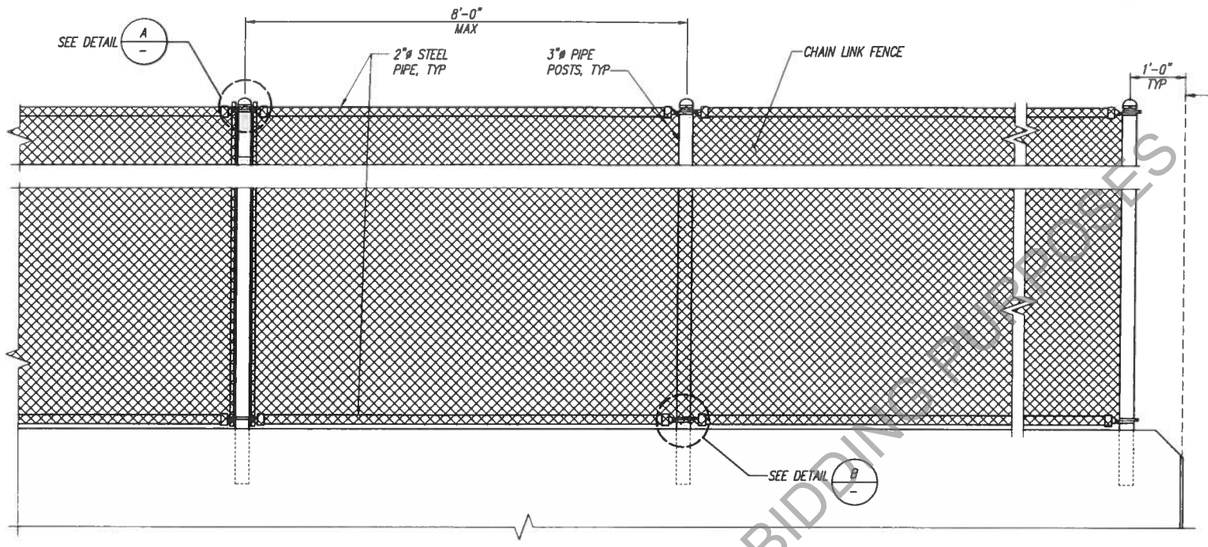

ELEVATION – CHAIN LINK FENCE
SCALE: 3/4" =1'-0"

PROTECTIVE SCREENING NOTES

ALL ELEMENTS OF FENCE SHALL BE HOT DIPPED GALVANIZED AFTER FABRICATION.

STEEL PIPES FOR POSTS AND LONGITUDINAL MEMBERS SHALL CONFORM TO ASTM SPECIFICATION A53 GRADE B GALV. PER AASHTO M 111.

ALL HARDWARE SHALL CONFORM TO AASHTO SPECIFICATION M 183 GALV. PER AASHTO M 111 & M232 UNLESS NOTED OTHERWISE.

FABRIC SHALL BE HEAVY DUTY ALUMINUM OF #9 GAGE WIRE WOVEN IN A 50 CHAIN LINK DIAMOND MESH.

FABRIC TIES SHALL BE INSTALLED TO ALL FENCES IN ACCORDANCE WITH GOOD TRADE PRACTICES AT 355 CENTERS MAXIMUM SPACING.

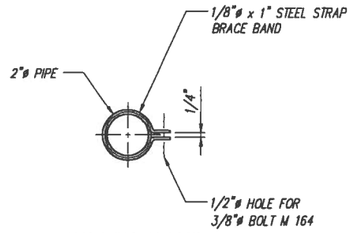

BRACE BAND
SCALE: 3" =1'-0"

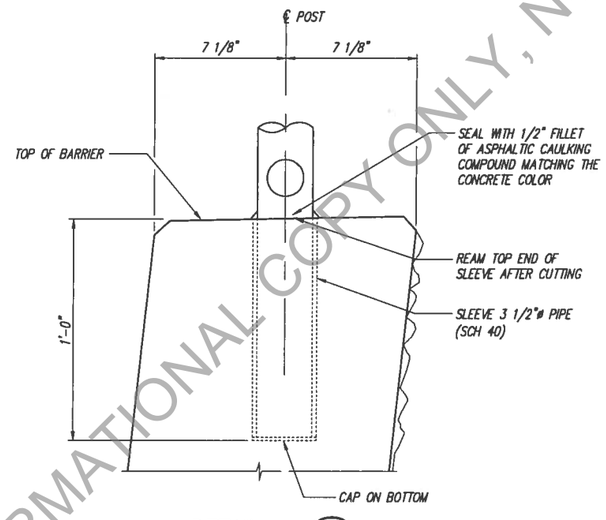

DETAIL C
SCALE: 3" =1'-0"

NOTE: PLUG SLEEVE TO PREVENT INFILTRATION DURING CASTING OF CONCRETE.

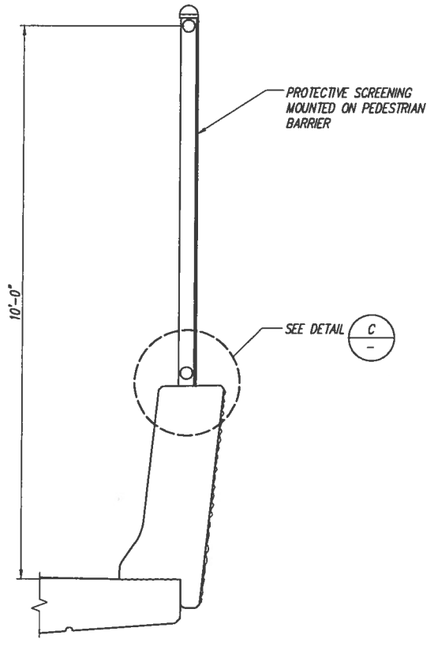

TYPICAL SECTION
PROTECTIVE SCREEN
SCALE: 3/4" =1'-0"

INFORMATIONAL COPY ONLY, NOT FOR BIDDING PURPOSES

3/14/2015
Approved for Construction — Date
Grant County, Road Engineer

RAILROAD MILEPOST 1624.9
COLUMBIA RIVER SUBDIVISION
TRINIDAD, WASHINGTON – GRANT COUNTY
47°15'15" N 119°58'55" W

					REGION NO.	STATE
						WASH
DESIGNED BY	JRL	11/20/14			JOB NUMBER	FED.AID PROJ.NO.
ENTERED BY	TLA	11/20/14			CRP13-02	BROS-2013(078)
CHECKED BY	AMS	11/20/14			CONTRACT NO.	
PROJ. ENGR.	DKM	11/20/14				
REGIONAL ADM.						
	DATE	DATE	REVISION	BY		

CALL TWO BUSINESS DAYS BEFORE YOU DIG 1-800-424-5555

11/20/2014

kpff Consulting Engineers
1601 Fifth Avenue, Suite 1600
Seattle, Washington 98101
(206) 622-5822 Fax (206) 622-8130

GRANT COUNTY
BRIDGE #399 REPLACEMENT

MISCELLANEOUS DETAILS

S-15

SHEET 20 OF 21 SHEETS

Drafter: MikeG Date: Mar 06, 2015-08:15am
Path: V:\113154 (Grant Co. Bridge No. 399)\Design\GC_S-15.dwg
Xref: | KPFF-1_X2234tb |

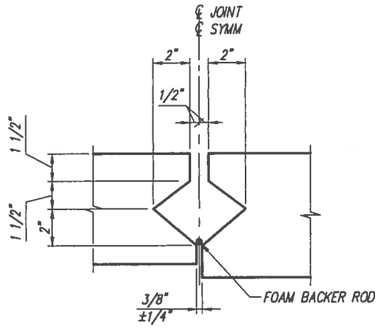

KEYWAY SECTION

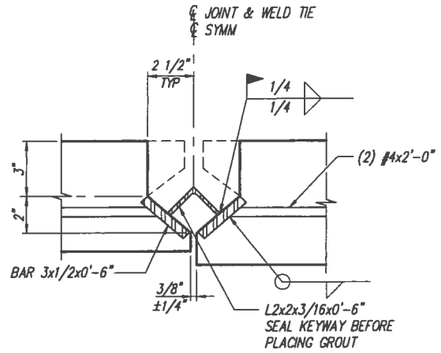

WELD-TIE SECTION
ALTERNATE #1

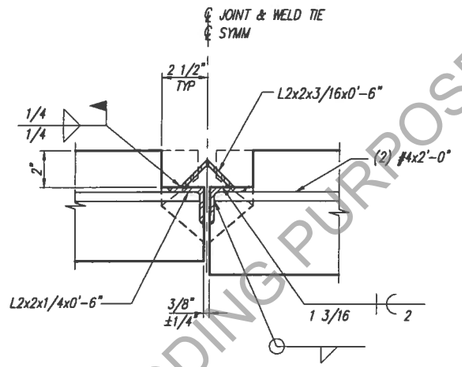

WELD-TIE SECTION
ALTERNATE #2

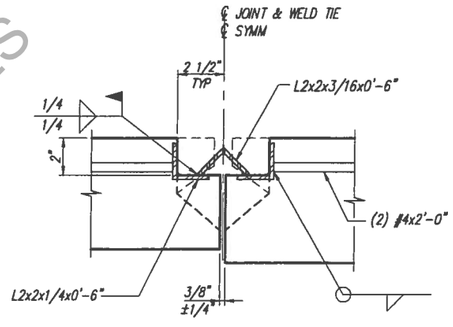

WELD-TIE SECTION
ALTERNATE #3

INFORMATIONAL COPY ONLY, NOT FOR BIDDING PURPOSES

3/19/2015
Approved for Construction
Grant County, Road Engineer
Date

RAILROAD MILEPOST 1624.9
COLUMBIA RIVER SUBDIVISION
TRINIDAD, WASHINGTON - GRANT COUNTY
47°15'15" N 119°58'55" W

DESIGNED BY	JRL	11/20/14			
ENTERED BY	TLA	11/20/14			
CHECKED BY	AMS	11/20/14			
PROJ. ENGR.	DKM	11/20/14			
REGIONAL ADM.					
		DATE	DATE	REVISION	BY

REGION NO. | STATE WASH | FED.AID PROJ.NO. BROS-2013(078)
JOB NUMBER CRP13-02
CONTRACT NO.

CALL TWO BUSINESS DAYS BEFORE YOU DIG 1-800-424-5555

IZZAT H. HASAYEN, STATE OF WASHINGTON, 28933, STRUCTURAL ENGINEER, PROFESSIONAL ENGINEER
11/20/2014

kpff Consulting Engineers
1601 Fifth Avenue, Suite 1600
Seattle, Washington 98101
(206) 622-5822 Fax (206) 622-8130

GRANT COUNTY

GRANT COUNTY
BRIDGE #399 REPLACEMENT

MISCELLANEOUS DETAILS

S-16

SHEET 21 OF 21 SHEETS

Drafter: MikeG Date: Mar 06, 2015-08:15am
Path: V:\113154 (Grant Co. Bridge No. 399)\Design\GC_S-16.dwg
Xref: KPFF-1_x22341b

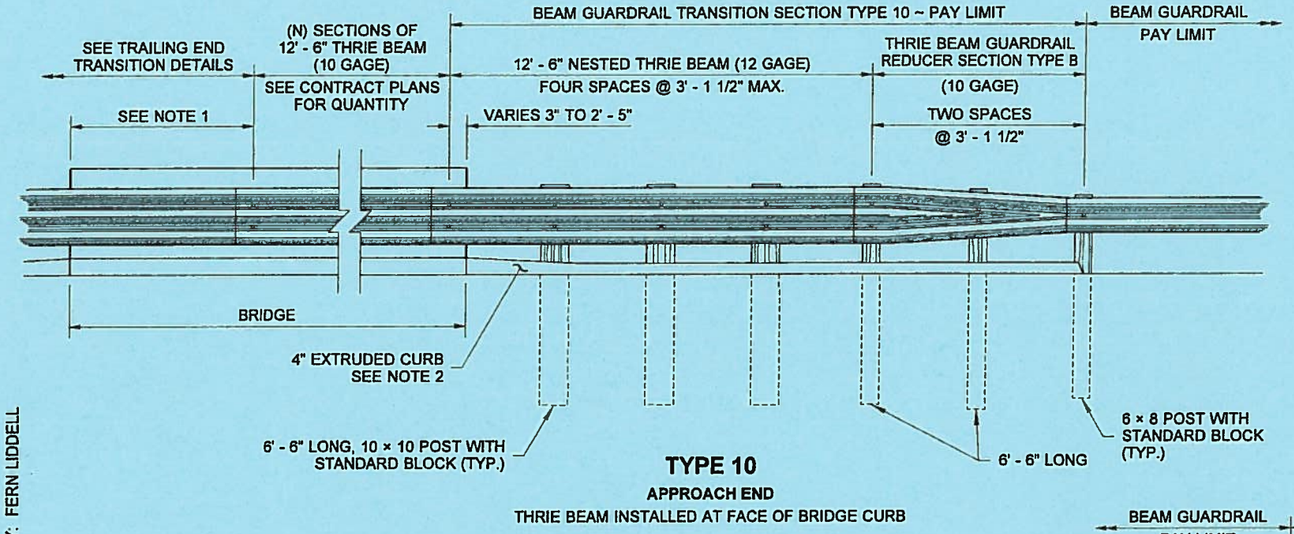

TYPE 10

APPROACH END

THRIE BEAM INSTALLED AT FACE OF BRIDGE CURB

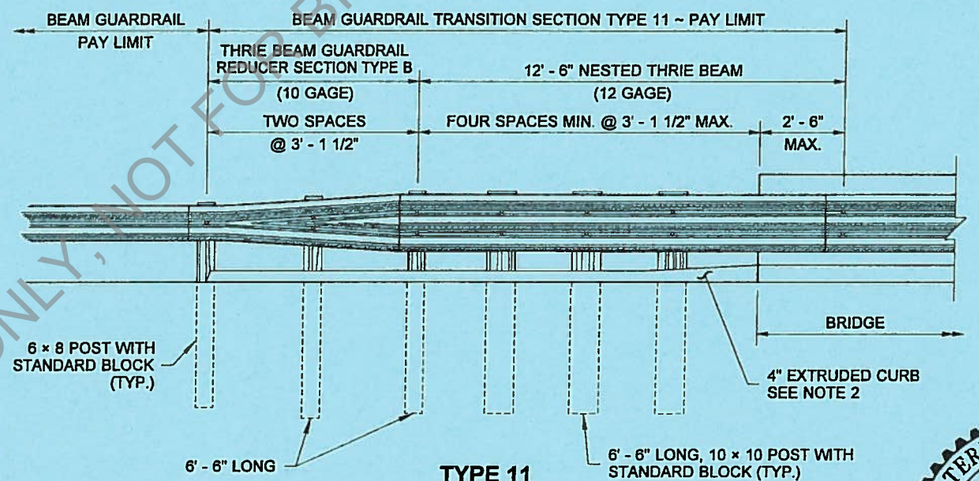

TYPE 11

TRAILING END

THRIE BEAM INSTALLED AT FACE OF BRIDGE CURB

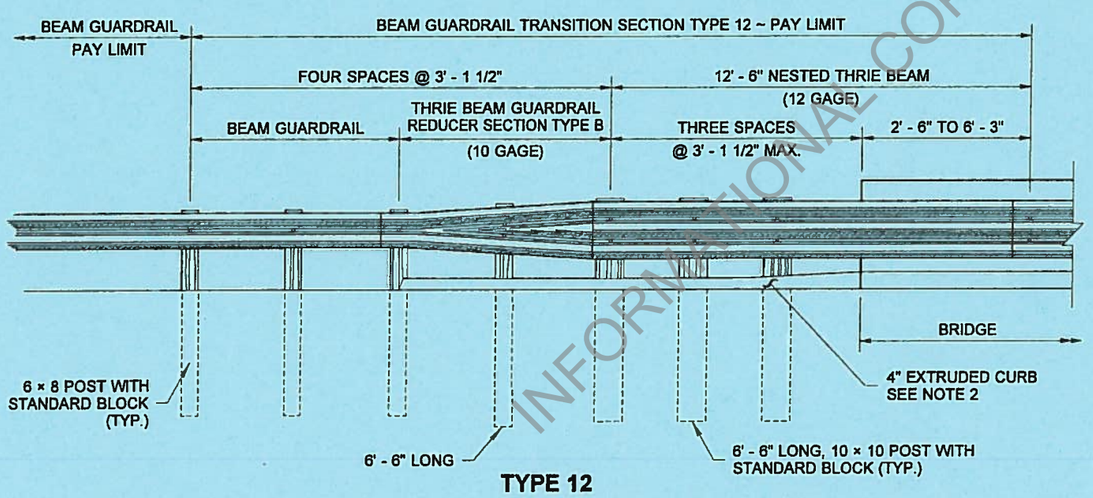

TYPE 12

TRAILING END

THRIE BEAM INSTALLED AT FACE OF BRIDGE CURB

NOTES

1. If the distance from the end of the bridge to the end of the thrie beam bridge rail section exceeds 6' - 3" using 12' - 6" thrie beam sections, add a 6' - 3" section of thrie beam bridge rail to reduce the length to less than 6' - 3".
2. When thrie beam is installed at the face of the bridge curb, install Extruded Curb at face of Guardrail. See **Standard Plan F-10.40** for details. Match the height of existing bridge curb with a 20H : 1V transition.
3. When thrie beam is installed at the face of rigid bridge rail, an HMA ramp is required from the roadway surface to the top of the bridge curb or sidewalk. The slope of the ramp shall be 20H : 1V or flatter.

INFORMATIONAL COPY ONLY, NOT FOR BIDDING PURPOSES

DRAWN BY: FERN LIDDELL

TERRY L. BERENDS
STATE OF WASHINGTON
32350
REGISTERED
PROFESSIONAL ENGINEER

6-17-2011

BEAM GUARDRAIL TRANSITION SECTIONS

STANDARD PLAN C-3b

SHEET 1 OF 2 SHEETS

APPROVED FOR PUBLICATION

STATE DESIGN ENGINEER — DATE 6/21/11

Washington State Department of Transportation

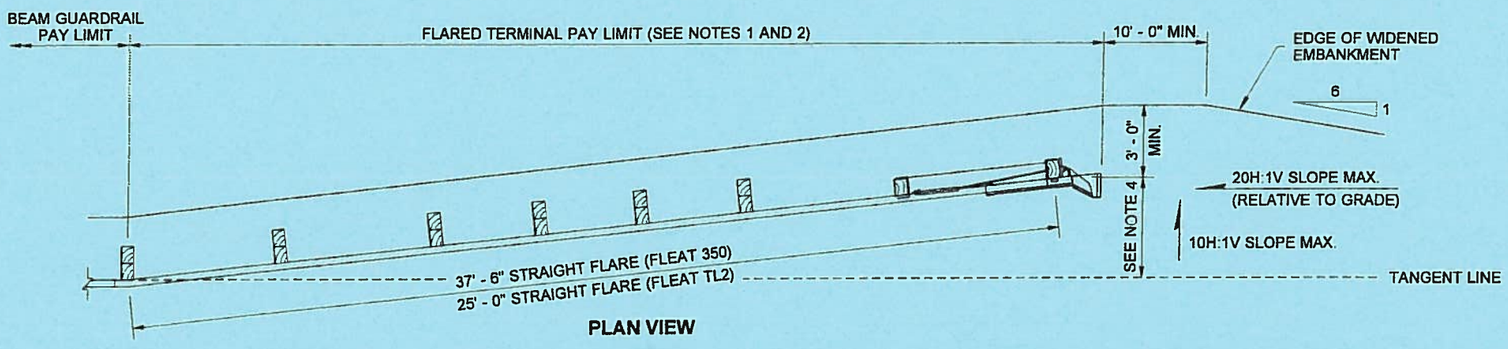

PLAN VIEW

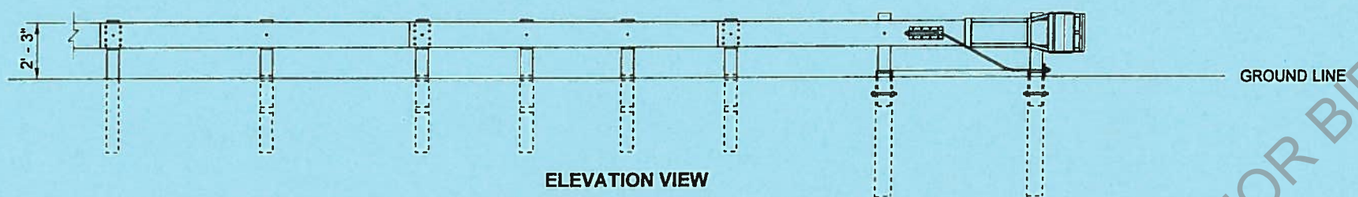

ELEVATION VIEW

FLEAT OPTION

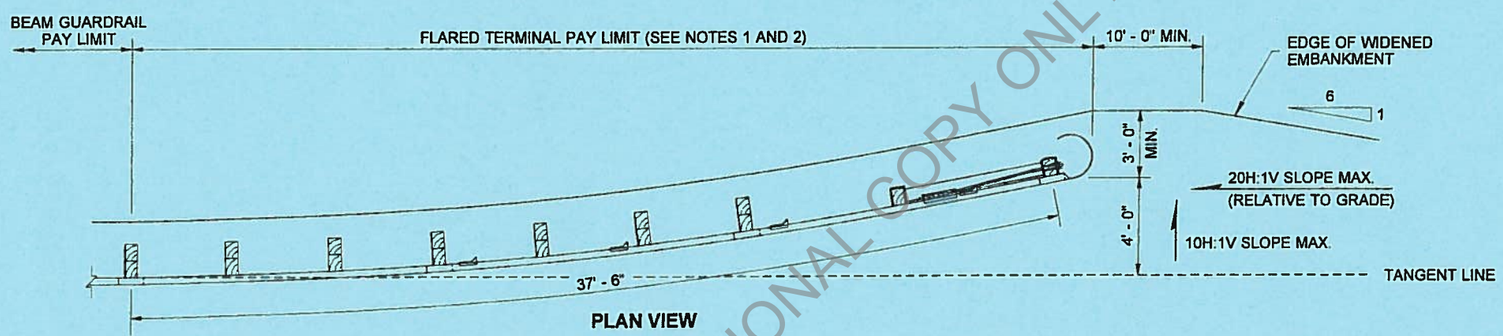

PLAN VIEW

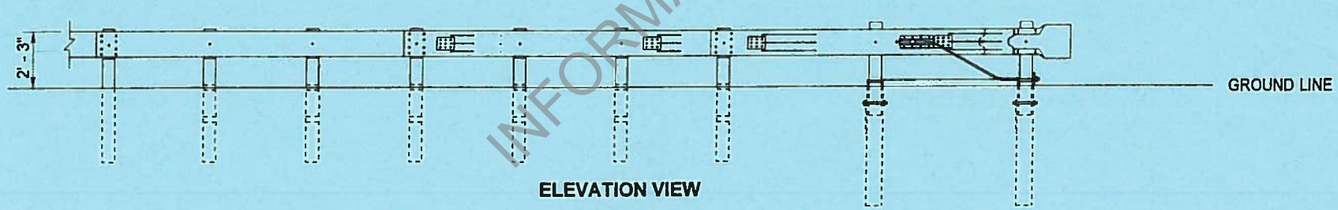

ELEVATION VIEW

SRT OPTION

NOTES

1. Unless otherwise indicated in the contract, the SRT - 350 (12.5, 8 Post) as manufactured by Trinity Industries, Inc., or a FLEAT 350 as manufactured by Road Systems Inc., shall be installed per manufacturer's recommendations. If specified in the Contract, the FLEAT TL2 as manufactured by Road Systems, Inc. shall be installed per manufacturers recommendations.
2. Where terminal is placed on a curve, and post offsets would result in the rail encroaching onto the shoulder (e.g., the inside of a curve), the posts shall be installed so that the faceof the rail is at the edge of the shoulder.
3. When snow load post washers and snow load rail washers are called for in the contract, the snow load rail washers must be omitted within the terminal limits.
4. Offset distances:

   FLEAT 350 ..... 4' - 0"

   FLEAT TL2 ..... 1' - 8" minimum

INFORMATIONAL COPY ONLY, NOT FOR BIDDING PURPOSES

RICHARD BARSTOW BIN
STATE OF WASHINGTON
34042
REGISTERED PROFESSIONAL ENGINEER
6/7/2006

EXPIRES JULY 24, 2006

BEAM GUARDRAIL FLARED TERMINAL

STANDARD PLAN C-4b

SHEET 1 OF 1 SHEET

APPROVED FOR PUBLICATION

Harold Petrifeso 6-8-06

STATE DESIGN ENGINEER DATE

Washington State Department of Transportation

DATE	REVISION	BY
04/2006	Revised FLEAT Flare Lengths	AMC

DRAWN BY: FERN LIDDELL

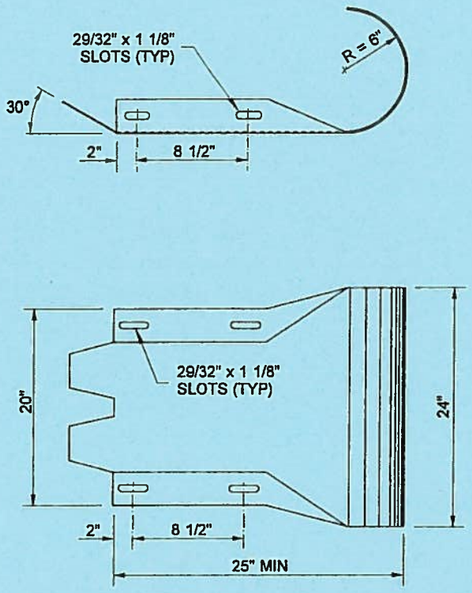

DESIGN C (THRIE BEAM)

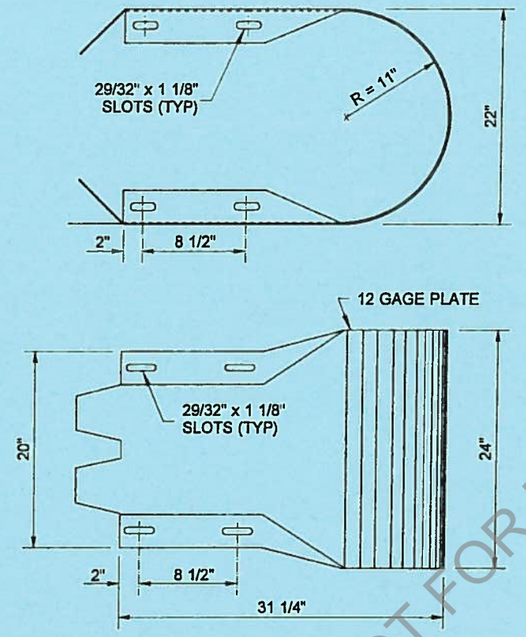

DESIGN D (THRIE BEAM)

NOTES

1. Attach guardrail to bridge rail or concrete barrier with 7/8" diameter bolts (five minimum) **Standard Spec. 9-06.5(4),** with thin slab ferrule inserts or resin bonded anchors. See the Contract Plans.

2. In cases where Design F End Section is lapped on the outside of the guardrail, a galvanized 1" ID, 2" OD, 0.134" thick, narrow Type A Plain Washer or an anchor rail washer will be placed under the splice bolt heads.

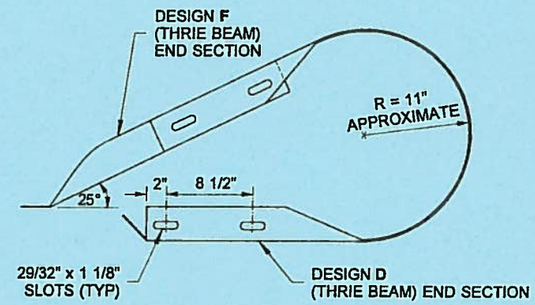

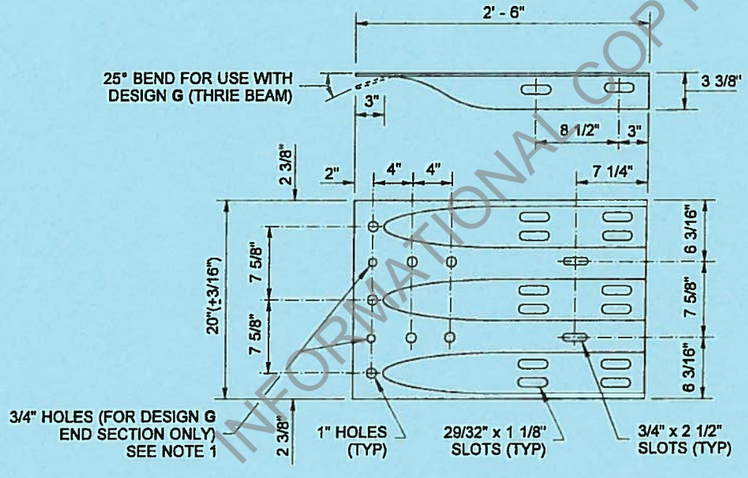

DESIGN F (THRIE BEAM)

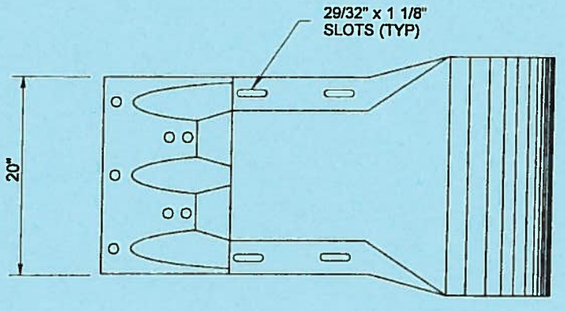

DESIGN G (THRIE BEAM)

6-8-2011

THRIE BEAM END SECTIONS

STANDARD PLAN C-7a

SHEET 1 OF 1 SHEET

APPROVED FOR PUBLICATION

Paco Bakotich III 6/16/11

STATE DESIGN ENGINEER DATE

Washington State Department of Transportation

INFORMATIONAL COPY ONLY, NOT FOR BIDDING PURPOSES

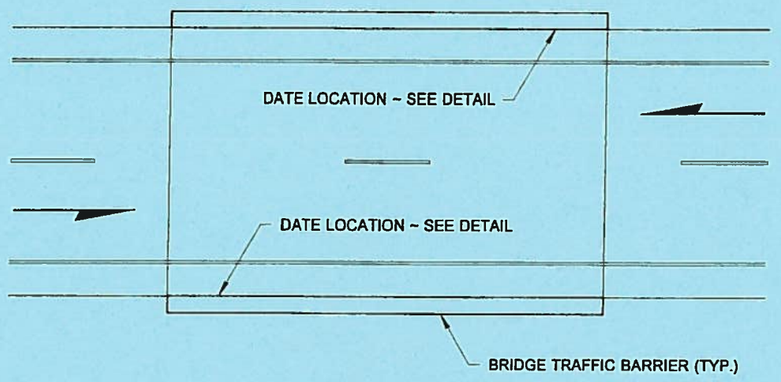

PLAN VIEW

DATE LOCATION ON TWO-WAY BRIDGES

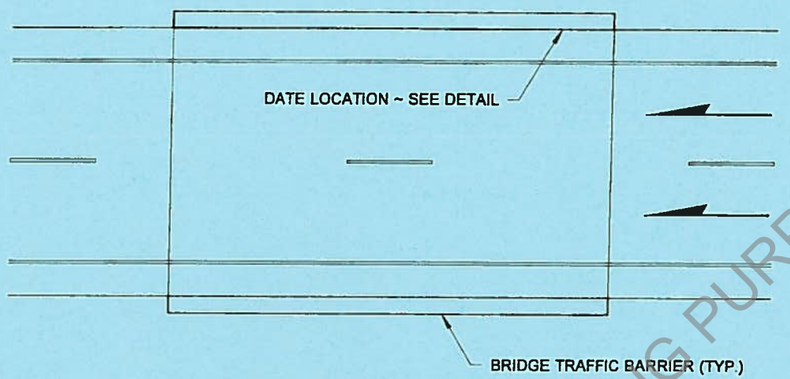

PLAN VIEW

DATE LOCATION ON ONE-WAY BRIDGES

NOTES

1. All numerals are approx. 3 1/4" wide except numeral "1" which is approx. 5/8" wide.
2. Spacing between the numeral "1" and any other numeral is 1". Spacing between all other numerals is 3/4".
3. Traffic Barrier Connections between the bridge and the approaching roadway vary and may consist of concrete barrier extensions. Install the Date Numerals on the traffic barrier of the bridge itself.

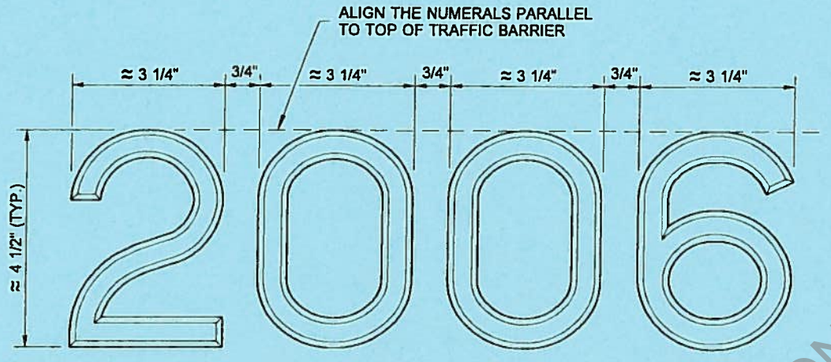

TYPICAL DATE NUMERALS

TYPICAL SECTION VIEW

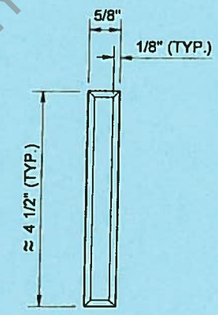

NUMERAL "1"

DATE NUMERAL DETAILS

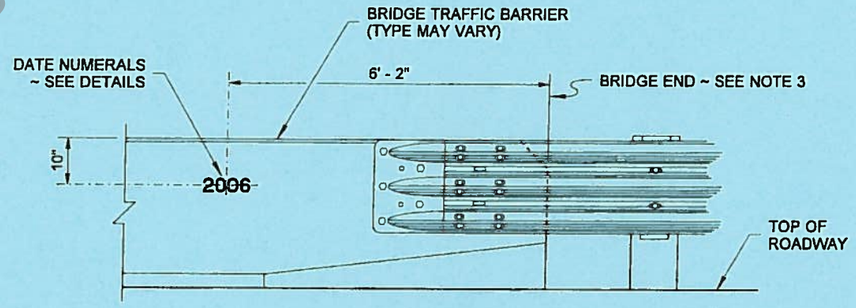

ELEVATION VIEW

DATE LOCATION DETAIL

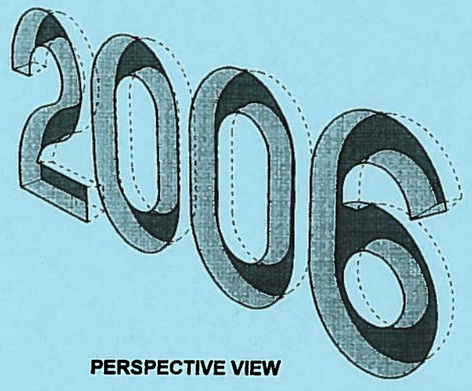

PERSPECTIVE VIEW

KEN LEROY SMITH
STATE OF WASHINGTON
31805
REGISTERED
PROFESSIONAL ENGINEER

02/26/07

EXPIRES AUGUST 26, 2007

DATE NUMERAL PLACEMENT ON BRIDGE TRAFFIC BARRIER STANDARD PLAN E-1

SHEET 1 OF 1 SHEET

APPROVED FOR PUBLICATION

STATE DESIGN ENGINEER — DATE 02/26/07

Washington State Department of Transportation

INFORMATIONAL COPY ONLY, NOT FOR BIDDING PURPOSES

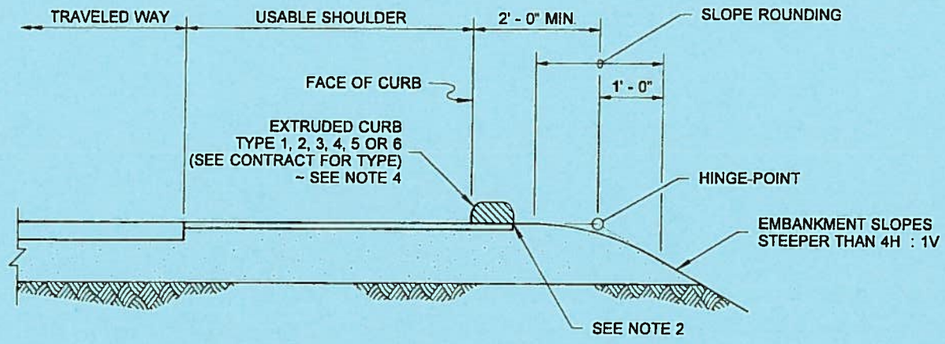

EXTRUDED CURB WITH SLOPE ROUNDING

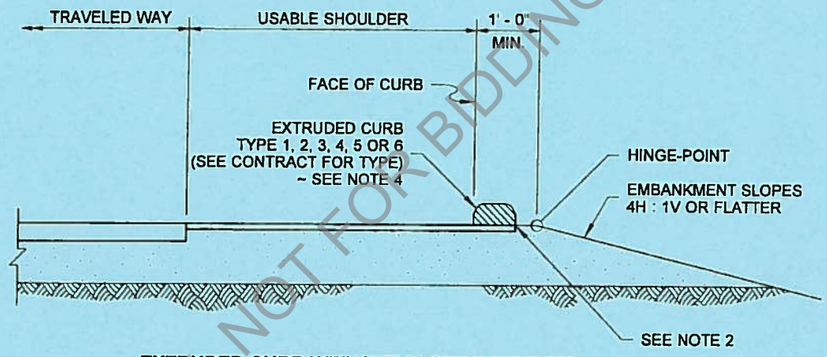

EXTRUDED CURB WITHOUT SLOPE ROUNDING

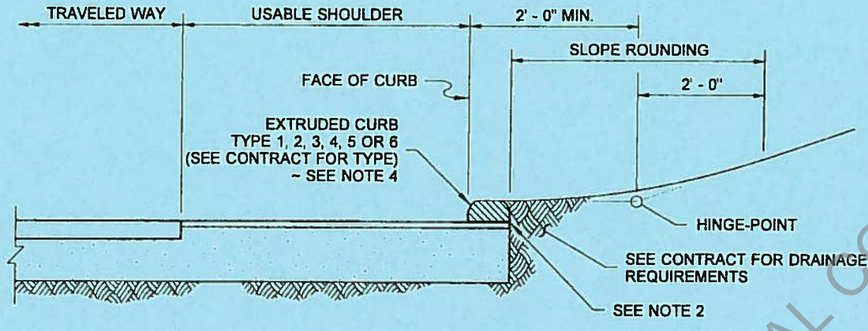

EXTRUDED CURB AT CUT SLOPE

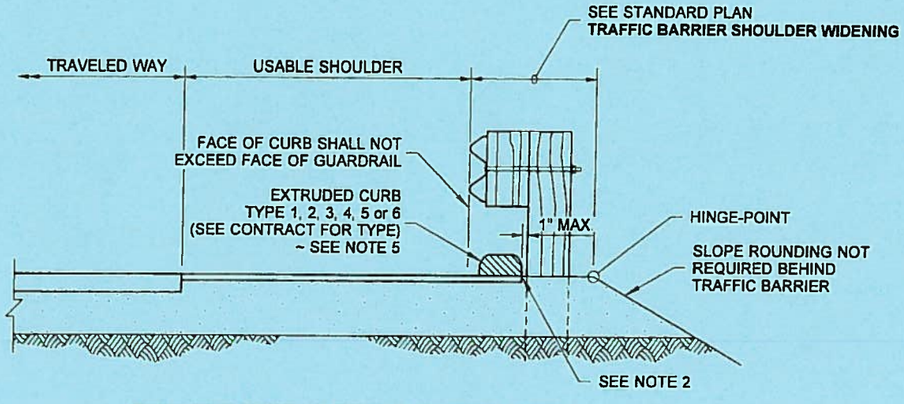

EXTRUDED CURB AT BEAM GUARDRAIL TYPE 1

NOTES

1. The installation of curb in areas with existing guardrail could require the removal and resetting of the guardrail or its components.
2. Extend shoulder pavement to provide a base for the extruded curb.
3. See Contract for exception to distances shown.
4. Type 3 and 6 curbs are not used on roadways with a posted speed greater than 40 mph.
5. Type 3 and 6 are not used under beam guardrail on roadways with a posted speed greater than 50 mph.
6. For extruded curb placement at Beam Guardrail Type 31, See **Standard Plan C-20.10.**
7. For extruded curb details, See **Standard Plan F-10.42.**

INFORMATIONAL COPY ONLY, NOT FOR BIDDING PURPOSES

DRAWN BY: FERN LIDDELL

EDWARD PATRICK BARRY
STATE OF WASHINGTON
34363
REGISTERED
PROFESSIONAL ENGINEER

5-21-2012

EXTRUDED CURB PLACEMENT

STANDARD PLAN F-10.40-02

SHEET 1 OF 1 SHEET

APPROVED FOR PUBLICATION

STATE DESIGN ENGINEER — DATE 4/21/12

Washington State Department of Transportation

DRAWN BY: BILL BERENS

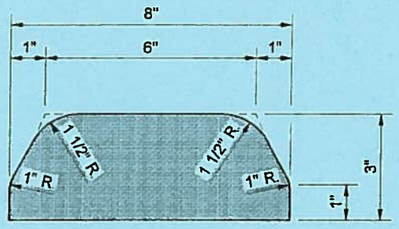

TYPE 1
(HOT MIX ASPHALT)

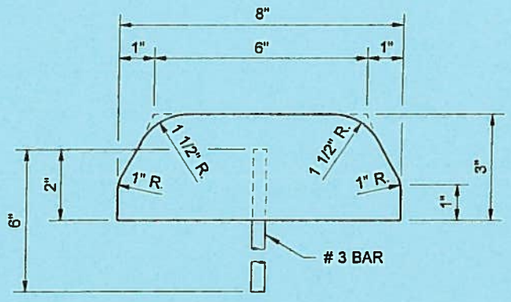

TYPE 4
(CEMENT CONCRETE)

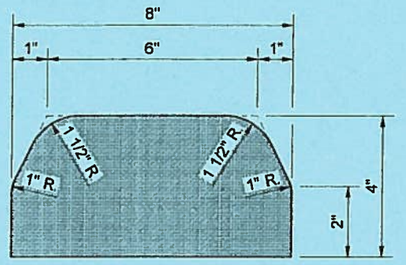

TYPE 2
(HOT MIX ASPHALT)

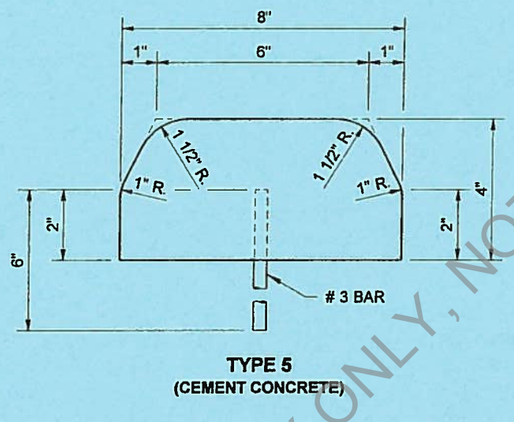

TYPE 5
(CEMENT CONCRETE)

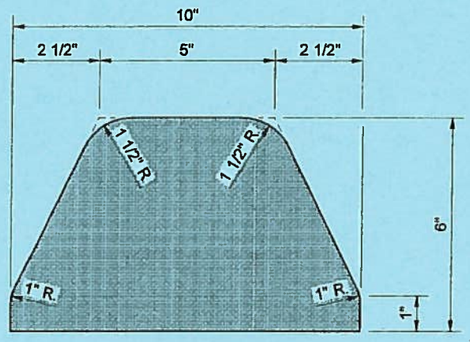

TYPE 3
(HOT MIX ASPHALT)

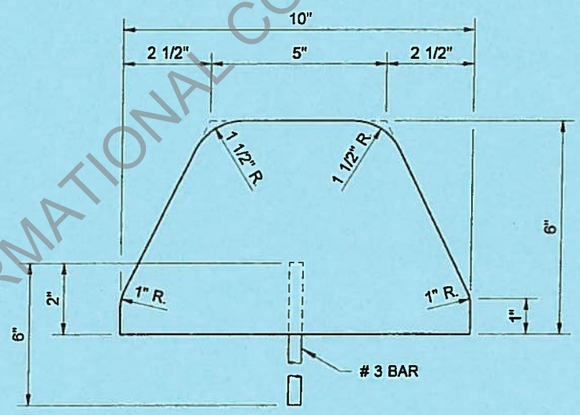

TYPE 6
(CEMENT CONCRETE)

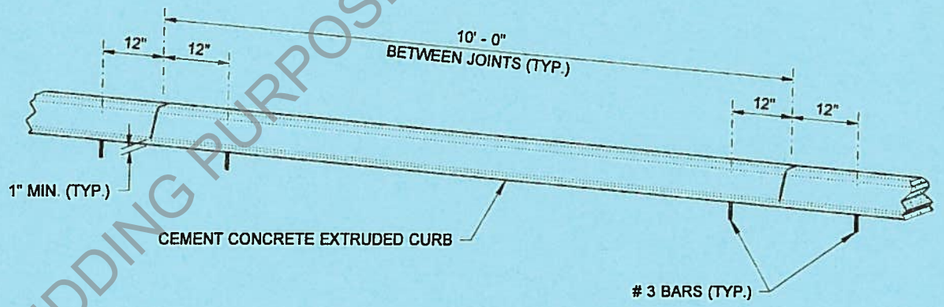

SPACING OF ANCHOR BARS
(FOR TYPES 4, 5, AND 6)

NOTE

JOINTS MAY BE FORMED DURING INSTALLATION USING A RIGID DIVIDER OR SAWCUT AFTER CONCRETE CURES TO MINIMUM STRENGTH.

INFORMATIONAL COPY ONLY, NOT FOR BIDDING PURPOSES

KEN LEROY SMITH
STATE OF WASHINGTON
31805
REGISTERED
PROFESSIONAL ENGINEER

EXPIRES AUGUST 26, 2007

EXTRUDED CURB

STANDARD PLAN F-10.42-00

SHEET 1 OF 1 SHEET

APPROVED FOR PUBLICATION

STATE DESIGN ENGINEER — DATE 01/23/07

Washington State Department of Transportation