GRANT COUNTY
PUBLIC WORKS DEPARTMENT

Jeff Tincher, P.E.
Director of Public Works and
County Road Engineer
Ephrata (509) 754-6082

David Heilman
Assistant Director of Public Works
Ephrata (509) 754-6082

Todd Mittge, P.E.
Assistant County Road Engineer
Ephrata (509) 754-6082

Robert Bersanti
Design/Construction Engineer
Ephrata (509) 754-6082

Steve Hill
Supervisor
Road District #1
Ephrata (509) 754-6586

Dennis Collier, Supervisor
Road District #2
Moses Lake (509) 765-4172

John Brissey, Supervisor
Road District #3
Quincy (509) 787-2321

Jerome Wawers, Supervisor
Bridges
Ephrata (509) 754-6082

Janice Goeden, Supervisor
Solid Waste
Ephrata (509) 754-4319

CONTRACT PROVISIONS and PLANS

For Construction of:

STRATFORD ROAD & PATTON BLVD. GRIND/INLAY PROJECT
CRP 14-02 & 14-03
STPUS-STPR-Z913(002); TA-5520 &
STPUS-6081(002); TA-5518

Sealed Bids will be Opened on
September 23, 2014
at
1:30 P.M.
at the Office of the
Board of County Commissioners
Grant County Courthouse
P.O. Box 37
35 C Street NW, Room 207
Ephrata, Washington 98823

INFORMATIONAL COPY ONLY - NOT FOR BIDDING

NOTICE TO CONTRACTORS

Sealed bids, plainly marked **"BID FOR STRATFORD ROAD & PATTON BLVD. GRIND/INLAY PROJECT, CRP 14-02 & 14-03"**, will be received by Grant County at the Office of the Board of County Commissioners located in the County Courthouse, P.O. Box 37, 35 C Street NW – Room 207, Ephrata, WA, 98823, until **1:30 P.M., Tuesday, September 23, 2014** and will then and there be opened and publicly read for the construction of the improvements.

All bid proposals shall be accompanied by a bid proposal deposit in cash, certified check, cashier's check, or surety bond in an amount equal to five percent (5%) of the amount of such bid proposal. No conditional bid bond will be accepted. Should the successful bidder fail to enter into such contract and furnish a satisfactory performance bond within the time stated in the specifications, the bid proposal deposit shall be forfeited to Grant County.

Maps, plans and specifications may be purchased from the office of the County Engineer, 124 Enterprise St. S.E., Ephrata, WA 98823, upon payment of the amount of $25.00 (non-refundable).

Informational copies of the maps, plans and specifications are on file for inspection at the Grant County Public Works Building, 124 Enterprise St. S.E., Ephrata, WA 98823, and in various plan centers located in Washington.

The following is applicable to federal-aid projects: The Grant County Department of Public Works in accordance with Title VI of the Civil Rights Act of 1964, 78 Stat. 252, 42 U.S.C. 2000d to 2000d-4 and Title 49, Code of Federal Regulations, Department of Transportation, subtitle A, Office of the Secretary, Part 21, Nondiscrimination in federally assisted programs of the Department of Transportation issued pursuant to such Act, hereby notifies all bidders that it will affirmatively insure that in any contract entered into pursuant to this advertisement, disadvantaged business enterprises as defined at 49 CFR Part 26 will be afforded full opportunity to submit bids in response to this invitation and will not be discriminated against on the grounds of race, color, national origin, or sex in consideration for an award.

The Board of County Commissioners of Grant County, Washington, reserves the right to reject any and all bids. The award of this contract, if made, will be to the lowest responsible bidder.

The improvement for which bids will be received follows:

STRATFORD ROAD & PATTON BLVD. GRIND/INLAY PROJECT – CRP 14-02 & 14-03
This contract provides for the construction of 3.32 miles of HMA grind/inlay on Stratford Road, from MP 1.11 to MP 4.43, and the construction of 1.60 miles of HMA grind/inlay on Patton Blvd., from MP 0.00 to MP 1.60, Patton Blvd. is a four lane county road with intermittent turn lanes, and Stratford Road is both a two lane and four lane county road with intermittent turn lanes, both roads are in Grant County, WA, and includes planing bituminous pavement, hot mix asphalt, project temporary traffic control, painted centerline and edge line and other work all in accordance with the attached Contract Plans, these Contract Provisions and the Standard Specifications.

INFORMATIONAL COPY ONLY - NOT FOR BIDDING

GRANT COUNTY PUBLIC WORKS

CRP 14-02 & 14-03

STRATFORD ROAD & PATTON BLVD. GRIND/INLAY PROJECT

INFORMATIONAL COPY ONLY - NOT FOR BIDDING

NOTICE TO ALL PLANHOLDERS

Grant County Department of Public Works may be contacted to answer questions regarding these bid documents and to show this project to prospective bidders is:
Grant County Department of Public Works

124 Enterprise St. S.E.
Ephrata, WA. 98823
Phone: (509)754-6082 Fax (509)754-6082

As the Engineer in direct responsible charge of developing these contract provisions, I certify these provisions have been developed or incorporated into this project under my direct supervision, or as a result of certified recommendations provided by other licensed professionals.

Jeffrey C. Tincher P.E. 8/29/2014
County Road Engineer Date

BIDDER'S CHECK LIST

The bidder's attention is especially called to the following forms which must be executed in full as required:

(A) PROPOSAL

The unit prices bid must be shown in the spaces provided. Show unit prices in figures only. All extensions of the unit prices must be shown in the spaces provided.

(B) PROPOSAL SIGNATURE SHEET

To be filled in and signed by the bidder.

(C) STATEMENT OF CONTRACTOR QUALIFICATIONS

To be filled in and signed by the bidder.

(D) BID BOND

This form is to be executed by the bidder and his surety company unless the bid is accompanied by cash, certified or cashier's check. The amount of this bond shall be equal to 5% of the total amount bid and may be shown in dollars or on a percentage basis.

(E) Non-Collusion Declaration (272-036I). To be submitted with the bid proposal

(F) Local Agency Subcontractor List (271-015A)

Prepared in compliance with RCW 39.30.060 as amended. If applicable, to be submitted with the bid proposal

(G) Local Agency Disadvantaged Business Enterprise Utilization Certification (272-056A). If applicable, to be submitted with the bid proposal

(H) Instructions for Disadvantaged Business Enterprise Utilization Certification (272-056)

(I) Local Agency Disadvantaged Business Enterprise (DBE) Written Confirmation Document (422-031A). If applicable, to be submitted with the bid proposal

The following forms are to be executed after the contract is awarded:

(J) CONTRACT

This agreement is to be executed by the successful bidder, his surety company, and Grant County.

(K) CONTRACT BOND

To be executed by the successful bidder and his surety company.

INFORMATIONAL COPY ONLY - NOT FOR BIDDING

TABLE OF CONTENTS

AMENDMENTS TO THE STANDARD SPECIFICATIONS 1

SPECIAL PROVISIONS 37

DIVISION 1 GENERAL REQUIREMENTS 37

BID PROCEDURES AND CONDITIONS 39

AWARD AND EXECUTION OF CONTRACT 46

SCOPE OF WORK 48

CONTROL OF WORK 48

CONTROL OF MATERIAL 51

LEGAL RELATIONS AND RESPONSIBILITIES TO THE PUBLIC 53

PROSECUTION AND PROGRESS 80

RETAINAGE 84

TEMPORARY TRAFFIC CONTROL 84

REMOVAL OF STRUCTURES AND OBSTRUCTIONS 87

DIVISION 5 SURFACE TREATMENTS AND PAVEMENTS 88

DIVISION 8 MISCELLANEOUS CONSTRUCTION 89

CEMENT CONCRETE SIDEWALKS 89

ILLUMINATION, TRAFFIC SIGNAL SYSTEMS, INTELLIGENT TRANSPORTATION SYSTEMS, AND ELECTRICAL 90

PAVEMENT MARKING 91

Proposal ..... Proposal Page 1 - 8

Contract ..... Contract Page 1 -4

Appendices

INFORMATIONAL COPY ONLY - NOT FOR BIDDING

Title VI – Contractor Requirements
Federal Aid Provisions
Wage Rates – Federal
Wage Rates – State
Plans
Traffic Control Plan
Standard Plans

INFORMATIONAL COPY ONLY - NOT FOR BIDDING

INFORMATIONAL COPY ONLY - NOT FOR BIDDING

INTRODUCTION

The following Amendments and Special Provisions shall be used in conjunction with the 2014 Standard Specifications for Road, Bridge, and Municipal Construction.

AMENDMENTS TO THE STANDARD SPECIFICATIONS

The following Amendments to the Standard Specifications are made a part of this contract and supersede any conflicting provisions of the Standard Specifications. For informational purposes, the date following each Amendment title indicates the implementation date of the Amendment or the latest date of revision.

Each Amendment contains all current revisions to the applicable section of the Standard Specifications and may include references which do not apply to this particular project.

Section 1-01, Definitions and Terms
August 4, 2014

1-01.3 Definitions

The definition for "**Engineer**" is revised to read:

> The Contracting Agency's representative who directly supervises the engineering and administration of a construction Contract.

The definition for "**Inspector**" is revised to read:

> The Engineer's representative who inspects Contract performance in detail.

The definition for "**Project Engineer**" is revised to read:

> Same as Engineer.

The definition for "**Working Drawings**" is revised to read:

> Drawings, plans, diagrams, or any other supplementary data or calculations, including a schedule of submittal dates for Working Drawings where specified, which the Contractor must submit to the Engineer.

Section 1-02, Bid Procedures and Conditions
April 7, 2014

1-02.8(1) Noncollusion Declaration

The third paragraph is revised to read:

> Therefore, by including the Non-collusion Declaration as part of the signed bid Proposal, the Bidder is deemed to have certified and agreed to the requirements of the Declaration.

INFORMATIONAL COPY ONLY - NOT FOR BIDDING

Section 1-03, Award and Execution of Contract
March 3, 2014

1-03.4 Contract Bond

The last word of item 3 is deleted.

Item 4 is renumbered to 5.

The following is inserted after item 3 (after the preceding Amendments are applied):

4. Be conditioned upon the payment of taxes, increases, and penalties incurred on the project under titles 50, 51, and 82 RCW; and

Section 1-04, Scope of the Work
August 4, 2014

1-04.4 Changes

In the third paragraph, item number 1 and 2 are revised to read:

A. When the character of the Work as altered differs materially in kind or nature from that involved or included in the original proposed construction; or

B. When an item of Work, as defined elsewhere in the Contract, is increased in excess of 125 percent or decreased below 75 percent of the original Contract quantity. For the purpose of this Section, an item of Work will be defined as any item that qualifies for adjustment under the provisions of Section 1-04.6.

The last two paragraphs are deleted.

This section is supplemented with the following new subsections:

1-04.4(2) Value Engineering Change Proposal (VECP)

1-04.4(2)A General

A VECP is a Contractor proposed change to the Contract Provisions which will accomplish the projects functional requirements in a manner that is equal to or better than the requirements in the Contract. The VECP may be: (1) at a less cost or time, or (2) either no cost savings or a minor increase in cost with a reduction in Contract time. The net savings or added costs to the Contract Work are shared by the Contractor and Contracting Agency.

The Contractor may submit a VECP for changing the Plans, Specifications, or other requirements of the Contract. The Engineer's decision to accept or reject all or part of the proposal is final and not subject to arbitration under the arbitration clause or otherwise subject to litigation.

The VECP shall meet all of the following:

1. Not adversely affect the long term life cycle costs.

2. Not adversely impact the ability to perform maintenance.

INFORMATIONAL COPY ONLY - NOT FOR BIDDING

3. Provide the required safety and appearance.

4. Provide substitution for deleted or reduced Disadvantaged Business Enterprise Condition of Award Work, Apprentice Utilization and Training.

VECPs that provide a time reduction shall meet the following requirements:

1. Time saving is a direct result of the VECP.

2. Liquidated damages penalties are not used to calculate savings.

3. Administrative/overhead cost savings experienced by either the Contractor or Contracting Agency as a result of time reduction accrue to each party and are not used to calculate savings.

1-04.4(2)B VECP Savings

1-04.4(2)B1 Proposal Savings

The incentive payment to the Contractor shall be one-half of the net savings of the proposal calculated as follows:

1. (gross cost of deleted work) – (gross cost of added work) = (gross savings)

2. (gross savings) – (Contractor's engineering costs) – (Contracting Agency's costs) = (net savings)

3. (net savings) / 2 = (incentive pay)

The Contracting Agency's costs shall be the actual consultant costs billed to the Contracting Agency and in-house costs. Costs for personnel assigned to the Engineer's office shall not be included.

1-04.4(2)B2 Added Costs to Achieve Time Savings

The cost to achieve the time savings shall be calculated as follows:

1. (cost of added work) + (Contractor's engineering costs - Contracting Agency's engineering costs) = (cost to achieve time savings)

2. (cost to achieve time savings) / 2 = (Contracting Agency's share of added cost)

If the timesaving proposal also involves deleting work and, as a result, creates a savings for the Contracting Agency, then the Contractor shall also receive one-half of the savings realized through the deletion.

1-04.4(2)C VECP Approval

1-04.4(2)C1 Concept Approval

The Contractor shall submit a written proposal to the Engineer for consideration. The proposal shall contain the following information:

1. An explanation outlining the benefit provided by the change(s).

INFORMATIONAL COPY ONLY - NOT FOR BIDDING

2. A narrative description of the proposed change(s). If applicable, the discussion shall include a demonstration of functional equivalency or a description of how the proposal meets the original contract scope of work.

3. A cost discussion estimating any net savings. Savings estimates will generally follow the outline below under the section, "Proposal Savings".

4. A statement providing the Contracting Agency with the right to use all or any part of the proposal on future projects without future obligation or compensation.

5. A statement acknowledging and agreeing that the Engineer's decision to accept or reject all or part of the proposal is final and not subject to arbitration under the arbitration clause or otherwise be subject to claims or disputes.

6. A statement giving the dates the Engineer must make a decision to accept or reject the conceptual proposal, the date that approval to proceed must be received, and the date the work must begin in order to not delay the contract. If the Contracting Agency does not approve the VECP by the date specified by the Contractor in their proposal the VECP will be deemed rejected.

7. The submittal will include an analysis on other Work that may have costs that changed as a result of the VECP. Traffic control and erosion control shall both be included in addition to any other impacted Work.

After review of the proposal, the Engineer will respond in writing with acceptance or rejection of the concept. This acceptance shall not be construed as authority to proceed with any change contract work. Concept approval allows the Contractor to proceed with the Work needed to develop final plans and other information to receive formal approval and to support preparation of a change order.

1-04.4(2)C2 Formal Approval

The Contractor's submittal to the Engineer for formal approval shall include the following:

1. Deleted Work – Include the calculated quantities of unit price Work to be deleted. Include the proposed partial prices for portions of lump sum Work deleted. For deletion of force account items include the time and material estimates.

2. Added Work – Include the calculated quantities of unit price Work to be added, either by original unit Contract prices or by new, negotiated unit prices. For new items of Work include the quantities and proposed prices.

3. Contractor's Engineering Costs – Submit the labor costs for the engineering to develop the proposal; costs for Contractor employees utilized in contract operations on a regular basis shall not be included.

4. Schedule Analysis – If the VECP is related to time savings, the Contractor shall submit a partial progress schedule showing the changed Work. The

INFORMATIONAL COPY ONLY - NOT FOR BIDDING

submittal shall also include a discussion comparing the partial progress schedule with the approved progress schedule for the project.

5. Working Drawings – Type 3 Working Drawings shall be submitted; those drawings which require engineering shall be a Type 3E.

Formal approval of the proposal will be documented by issuance of a change order. The VECP change order will contain the following statements which the Contractor agrees to by signing the change order:

1. The Contractor accepts design risk of all features, both temporary and permanent, of the changed Work.

2. The Contractor accepts risk of constructability of the changed Work.

3. The Contractor provides the Contracting Agency with the right to use all or any part of the proposal on future projects without further obligation or compensation.

VECP change orders will contain separate pay items for the items that are applicable to the Proposal. These are as follows:

1. Deleted Work.

2. Added Work.

3. The Contractor's engineering costs, reimbursed at 100 percent of the Contractor's cost.

4. Incentive payment to the Contractor.

When added Work costs exceed Deleted Work costs, but time savings make a viable proposal, then items 3 and 4 above are replaced with the following:

3. The Contracting Agency's share of added cost to achieve time savings.

4. The Contractor's share of savings from deleted Work.

1-04.4(2)C3 Authority to Proceed with Changed Work

The authority for the Contractor to proceed with the VECP Work will be provided by one of the following options:

1. Execution of the VECP change order, or

2. At the Contractor's request the Contracting Agency may provide approval by letter from the Engineer for the Work to proceed prior to execution of a change order. All of the risk for proceeding with the VECP shall be the responsibility of the Contractor. Additionally, the following criteria are required to have been met:

   a) Concept approval has been granted by the Contracting Agency.

INFORMATIONAL COPY ONLY - NOT FOR BIDDING

b) All design reviews and approvals have been completed, including plans and specifications.

c) The Contractor has guaranteed, in writing, the minimum savings to the Contracting Agency.

Section 1-05, Control of Work
August 4, 2014

1-05.1 Authority of the Engineer

In this section, "Project Engineer" is revised to read "Engineer".

The second paragraph (up until the colon) is revised to read:

> The Engineer's decisions will be final on all questions including the following:

The first sentence in the third paragraph is revised to read:

> The Engineer represents the Contracting Agency with full authority to enforce Contract requirements.

1-05.2 Authority of Assistants and Inspectors

The first paragraph is revised to read:

> The Engineer may appoint assistants and Inspectors to assist in determining that the Work and materials meet the Contract requirements. Assistants and Inspectors have the authority to reject defective material and suspend Work that is being done improperly, subject to the final decisions of the Engineer.

In the third paragraph, "Project Engineer" is revised to read "Engineer".

1-05.3 Plans and Working Drawings

This section's title is revised to read:

> **Working Drawings**

This section is revised to read:

> The Contract may require the Contractor to submit Working Drawings for the performance of the Work. Working Drawings shall be submitted by the Contractor electronically to the Engineer in PDF format; drawing details shall be prepared in accordance with conventional detailing practices. If the PDF format is found to be unacceptable, at the request of the Engineer, the Contractor shall provide paper copies of the Working Drawings with drawings on 11 by 17 inch sheets and calculations/text on 8½ by 11 inch sheets.
>
> Working Drawings will be classified under the following categories:
>
> 1. **Type 1** – Submitted for Contracting Agency information. Submittal must be received by the Contracting Agency a minimum of 7 calendar days before work represented by the submittal begins.

INFORMATIONAL COPY ONLY - NOT FOR BIDDING

2. **Type 2** – Submitted for Contracting Agency review and comment. Unless otherwise stated in the Contract, the Engineer will require up to 20 calendar days from the date the Working Drawing is received until it is returned to the Contractor. The Contractor shall not proceed with the Work represented by the Working Drawing until comments from the Engineer have been addressed.

3. **Type 2E** – Same as a Type 2 Working Drawing with Engineering as described below.

4. **Type 3** – Submitted for Contracting Agency review and approval. Unless otherwise stated in the Contract, the Engineer will require up to 30 calendar days from the date the Working Drawing is received until it is returned to the Contractor. The Contractor shall obtain the Engineer's written approval before proceeding with the Work represented by the Working Drawing.

5. **Type 3E** – Same as a Type 3 Working Drawing with Engineering as described below.

All Working Drawings shall be considered Type 3 Working Drawings except as specifically noted otherwise in the Contract. Unless designated otherwise by the Contractor, submittals of Working Drawings will be reviewed in the order they are received by the Engineer. In the event that several Working Drawings are received simultaneously, the Contractor shall specify the sequence in which they are to be reviewed. If the Contractor does not submit a review sequence for simultaneous Working Drawing submittals, the review sequence will be at the Engineer's discretion.

Working Drawings requiring Engineering, Type 2E and 3E, shall be prepared by (or under the direction of) a Professional Engineer, licensed under Title 18 RCW, State of Washington, and in accordance with WAC 196-23-020. Design calculations shall carry the Professional Engineer's signature and seal, date of signature, and registration number on the cover page. The cover page shall also include the Contract number, Contract title and sequential index to calculation page numbers.

If more than the specified number of days is required for the Engineer's review of any individual Working Drawing or resubmittal, an extension of time will be considered in accordance with Section 1-08.8.

Review or approval of Working Drawings shall neither confer upon the Contracting Agency nor relieve the Contractor of any responsibility for the accuracy of the drawings or their conformity with the Contract. The Contractor shall bear all risk and all costs of any Work delays caused by rejection or nonapproval of Working Drawings.

Unit Bid prices shall cover all costs of Working Drawings.

Section 1-07, Legal Relations and Responsibilities to the Public
January 6, 2014

1-07.2 State Taxes

This section is revised to read:

The Washington State Department of Revenue has issued special rules on the state sales tax. Sections 1-07.2(1) through 1-07.2(3) are meant to clarify those rules. The Contracting

INFORMATIONAL COPY ONLY - NOT FOR BIDDING

Agency will not adjust its payment if the Contractor bases a Bid on a misunderstood tax liability.

The Contracting Agency may deduct from its payments to the Contractor, retainage or lien the bond, in the amount the Contractor owes the State Department of Revenue, whether the amount owed relates to the Contract in question or not. Any amount so deducted will be paid into the proper State fund on the contractor's behalf. For additional information on tax rates and application refer to applicable RCWs, WACs or the Department of Revenue's website.

1-07.2(1) State Sales Tax: Work Performed on City, County, or Federally-Owned Land

This section including title is revised to read:

1-07.2(1) State Sales Tax: WAC 458-20-171 – Use Tax

For Work designated as Rule 171, **Use Tax,** the Contractor shall include for compensation the amount of any taxes paid in the various unit Bid prices or other Contract amounts. Typically, these taxes are collected on materials incorporated into the project and items such as the purchase or rental of; tools, machinery, equipment, or consumable supplies not integrated into the project.

The Summary of Quantities in the Contract Plans identifies those parts of the project that are subject to **Use Tax** under Section 1-07.2(1).

1-07.2(2) State Sales Tax: Work on State-Owned or Private Land

This section including title is revised to read:

1-07.2(2) State Sales Tax: WAC 458-20-170 – Retail Sales Tax

For Work designated as Rule 170, **Retail Sales Tax,** the Contractor shall collect from the Contracting Agency, **Retail Sales Tax** on the full Contract price. The Contracting Agency will automatically add this **Retail Sales Tax** to each payment to the Contractor and for this reason; the Contractor shall not include the **Retail Sales Tax** in the unit Bid prices or in any other Contract amount. However, the Contracting Agency will not provide additional compensation to the Prime Contractor or Subcontractor for **Retail Sales Taxes** paid by the Contractor in addition to the **Retail Sales Tax** on the total contract amount. Typically, these taxes are collected on items such as the purchase or rental of; tools, machinery, equipment, or consumable supplies not integrated into the project. Such sales taxes shall be included in the unit Bid prices or in any other Contract amounts.

The Summary of Quantities in the Contract Plans identifies those parts of the project that are subject to **Retail Sales Tax** under Section 1-07.2(2).

1-07.2(3) Services

This section is revised to read:

Any contract wholly for professional or other applicable services is generally not subject to **Retail Sales Tax** and therefore the Contractor shall not collect **Retail Sales Tax** from the Contracting Agency on those Contracts. Any incidental taxes paid as part of providing the services shall be included in the payments under the contract.

INFORMATIONAL COPY ONLY - NOT FOR BIDDING

Section 1-08, Prosecution and Progress
May 5, 2014

1-08.1 Subcontracting

The eighth paragraph is revised to read:

> On all projects, the Contractor shall certify to the actual amounts paid to Disadvantaged, Minority, Women's, or Small Business Enterprise firms that were used as Subcontractors, lower tier subcontractors, manufacturers, regular dealers, or service providers on the Contract. This Certification shall be submitted to the Project Engineer on a monthly basis each month between Execution of the Contract and Physical Completion of the contract using the application available at: https://remoteapps.wsdot.wa.gov/mapsdata/tools/dbeparticipation. The monthly report is due 20 calendar days following the end of the month. A monthly report shall be submitted for every month between Execution of the Contract and Physical Completion regardless of whether payments were made or work occurred.

The ninth paragraph is deleted.

Section 1-10, Temporary Traffic Control
August 4, 2014

1-10.1(1) Materials

The following material reference is deleted from this section:

> Barrier Drums 9-35.8

1-10.1(2) Description

The first paragraph is revised to read:

> The Contractor shall provide flaggers, and all other personnel required for labor for traffic control activities and not otherwise specified as being furnished by the Contracting Agency.

1-10.2(1) General

In the third paragraph, the first two sentences are revised to read:

> The primary and alternate TCS shall be certified by one of the organizations listed in the Special Provisions. Possession of a current Washington State TCS card and flagging card by the primary and alternate TCS is mandatory.

1-10.2(1)B Traffic Control Supervisor

The first paragraph is revised to read:

> A Traffic Control Supervisor (TCS) shall be present on the project whenever flagging or other traffic control labor is being utilized or less frequently, as authorized by the Engineer.

The last paragraph is revised to read:

> The TCS may perform the Work described in Section 1-10.3(1)A Flaggers or in Section 1-10.3(1)B Other Traffic Control Labor and be compensated under those Bid items, provided that the duties of the TCS are accomplished.

INFORMATIONAL COPY ONLY - NOT FOR BIDDING

1-10.2(2) Traffic Control Plans

The first paragraph is revised to read:

> The traffic control plan or plans appearing in the Contract documents show a method of handling vehicle, bicycle, and pedestrian traffic. All construction signs, flaggers, and other traffic control devices are shown on the traffic control plan(s) except for emergency situations. If the Contractor proposes adding the use of flaggers to a plan, this will constitute a modification requiring approval by the Engineer. The modified plans shall show locations for all the required advance warning signs and a safe, protected location for the flagging station. If flagging is to be performed during hours of darkness, the plan shall include appropriate illumination for the flagging station.

In the second paragraph, the second sentence is revised to read:

> Any Contractor-proposed modification, supplement or replacement shall show the necessary construction signs, flaggers, and other traffic control devices required to support the Work.

1-10.2(3) Conformance to Established Standards

In the second paragraph, the second sentence is revised to read:

> The National Cooperative Highway Research Project (NCHRP) Report 350 and the AASHTO Manual for Assessing Safety Hardware (MASH) have established requirements for crash testing.

In the third paragraph, "NCHRP 350" is revised to read "NCHRP 350 or MASH".

In the fourth paragraph, "NCHRP 350" is revised to read "NCHRP 350 or MASH".

In the fifth paragraph, "NCHRP 350" is revised to read "NCHRP 350 or MASH".

1-10.3(1) Traffic Control Labor

The first paragraph is revised to read:

> The Contractor shall furnish all personnel for flagging, for the execution of all procedures related to temporary traffic control and for the setup, maintenance and removal of all temporary traffic control devices and construction signs necessary to control vehicular, bicycle, and pedestrian traffic during construction operations.

1-10.3(1)A Flaggers and Spotters

This section's title is revised to read:

> **Flaggers**

The first paragraph is revised to read:

> Flaggers shall be posted where shown on approved Traffic Control Plans or where directed by the Engineer. All flaggers shall possess a current flagging card issued by the State of Washington, Oregon, Montana, or Idaho. The flagging card shall be immediately available and shown to the Contracting Agency upon request.

The last paragraph is deleted.

INFORMATIONAL COPY ONLY - NOT FOR BIDDING

1-10.3(1)B Other Traffic Control Labor

This section is revised to read:

In addition to flagging duties, the Contractor shall provide personnel for all other traffic control procedures required by the construction operations and for the labor to install, maintain and remove any traffic control devices shown on Traffic Control Plans.

1-10.3(3)B Sequential Arrow Signs

This section is supplemented with the following:

A sequential arrow sign is required for all lane closure tapers on a multilane facility. A separate sequential arrow sign shall be used for each closed lane. The arrow sign shall not be used to laterally shift traffic. When used in the caution mode, the four corner mode shall be used.

1-10.3(3)C Portable Changeable Message Signs

This section is revised to read:

Where shown on an approved traffic control plan or where ordered by the Engineer, the Contractor shall provide, operate, and maintain portable changeable message signs (PCMS). A PCMS shall be placed behind a barrier or guardrail whenever possible, but shall at a minimum provide 4 ft. of lateral clearance to edge of travelled lane and be delineated by channelization devices. The Contractor shall remove the PCMS from the clear zone when not in use unless protected by barrier or guardrail.

1-10.3(3)F Barrier Drums

This section including title is deleted in its entirety and replaced with the following:

1-10.3(3)F Vacant

1-10.3(3)K Portable Temporary Traffic Control Signal

The fifth paragraph is revised to read:

The Project Engineer or designee will inspect the signal system at initial installation/operation and approve the signal timing. Final approval will be based on the results of the operational inspection.

1-10.4(2) Item Bids With Lump Sum for Incidentals

In the second paragraph, the first and second sentences are revised to read:

"Flaggers" will be measured by the hour. Hours will be measured for each flagging station, shown on an approved Traffic Control Plan, when that station is staffed in accordance with Section 1-10.3(1)A.

The first sentence of the last bulleted item in this section is revised to read:

Installing and removing Barricades, Traffic Safety Drums, Cones, Tubular Markers and Warning Lights and Flashers to carry out approved Traffic Control Plan(s).

1-10.5(2) Item Bids With Lump Sum for Incidentals

This section is deleted and replaced with the following:

"Traffic Control Supervisor", lump sum.

INFORMATIONAL COPY ONLY - NOT FOR BIDDING

The lump sum Contract payment shall be full compensation for all costs incurred by the Contractor in performing the Work defined in Section 1-10.2(1)B.

"Pedestrian Traffic Control", lump sum.

The lump sum Contract payment shall be full compensation for all costs incurred by the Contractor in performing the Work for pedestrian traffic control defined in Section 1-10.

"Flaggers", per hour.

The unit Contract price, when applied to the number of units measured for this item in accordance with Section 1-10.4(2), shall be full compensation for all costs incurred by the Contractor in performing the Work defined in Section 1-10.3(1)A.

"Other Traffic Control Labor", per hour.

The unit Contract price, when applied to the number of units measured for this item in accordance with Section 1-10.4(2), shall be full compensation for all labor costs incurred by the Contractor in performing the Work specified for this item in Section 1-10.4(2).

"Construction Signs Class A", per square foot.

The unit Contract price, when applied to the number of units measured for this item in accordance with Section 1-10.4(2), shall be full compensation for all costs incurred by the Contractor in performing the Work described in Section 1-10.3(3)A. In the event that "Do Not Pass" and "Pass With Care" signs must be left in place, a change order, as described in Section 1-04.4, will be required. When the Bid Proposal contains the item "Sign Covering", then covering those signs indicated in the Contract will be measured and paid according to Section 8-21.

"Sequential Arrow Sign", per hour.

The unit Contract price, when applied to the number of units measured for this item in accordance with Section 1-10.4(2), shall be full compensation for all costs incurred by the Contractor in performing the Work described in Section 1-10.3(3)B.

"Portable Changeable Message Sign", per hour.

The unit Contract price, when applied to the number of units measured for this item in accordance with Section 1-10.4(2), shall be full compensation for all costs incurred by the Contractor in performing the Work for procuring all portable changeable message signs required for the project and for transporting these signs to and from the project.

"Transportable Attenuator", per each.

The unit Contract price, when applied to the number of units measured for this item in accordance with Section 1-10.4(2), shall be full compensation for all costs incurred by the Contractor in performing the Work described in Section 1-10.3(3)J except for costs compensated separately under the items "Operation of Transportable Attenuator" and "Repair Transportable Attenuator".

"Operation of Transportable Attenuator", per hour.

INFORMATIONAL COPY ONLY - NOT FOR BIDDING

The unit Contract price, when applied to the number of units measured for this item in accordance with Section 1-10.4(2), shall be full compensation for all costs incurred by the Contractor in performing the Work for operating transportable attenuators on the project.

"Repair Transportable Attenuator", by force account.

All costs of repairing or replacing transportable attenuators that are damaged by the motoring public while in use as shown on an approved Traffic Control Plan will be paid for by force account as specified in Section 1-09.6. To provide a common Proposal for all Bidders, the Contracting Agency has estimated the amount of force account for "Repair Transportable Attenuator" and has entered the amount in the Proposal to become a part of the total Bid by the Contractor. Transportable attenuators damaged due to the Contractor's operation or damaged in any manner when not in use shall be repaired or replaced by the Contractor at no expense to the Contracting Agency.

"Other Temporary Traffic Control", lump sum.

The lump sum Contract payment shall be full compensation for all costs incurred by the Contractor in performing the Work defined in Section 1-10, and which costs are not compensated by one of the above-listed items.

"Portable Temporary Traffic Control Signal", lump sum.

The lump sum Contract payment shall be full compensation for all costs incurred by the Contractor in performing the Work as described in Section 1-10.3(3)K, including all costs for traffic control during manual control, adjustment, malfunction, or failure of the portable traffic control signals and during replacement of failed or malfunctioning signals.

Section 3-04, Acceptance of Aggregate
August 4, 2014

3-04.5 Payment

In Table 2, the row containing the item "HMA Aggregate" is revised to read:

9-03.8(2)	HMA Aggregate						15	15	Uncompacted Void Content 15

Section 5-04, Hot Mix Asphalt
August 4, 2014

5-04.3(7)A3 Commercial Evaluation

The second sentence in the first paragraph is revised to read:

Mix designs for HMA accepted by commercial evaluation shall be submitted to the Project Engineer on WSDOT Form 350-042.

5-04.3(10)A General

In the first paragraph, "checking" and "cracking" are deleted.

INFORMATIONAL COPY ONLY - NOT FOR BIDDING

In the third paragraph, the following new sentence is inserted after the second sentence:

Coverage with a steel wheel roller may precede pneumatic tired rolling.

In the third paragraph, the following new sentence is inserted before the last sentence:

Regardless of mix temperature, a roller shall not be operated in a mode that results in checking or cracking of the mat.

5-04.3(10)B1 General

In this section, "Project Engineer" is revised to read "Engineer".

The first paragraph is revised to read:

HMA mixture accepted by statistical or nonstatistical evaluation that is used in traffic lanes, including lanes for ramps, truck climbing, weaving, and speed change, and having a specified compacted course thickness greater than 0.10-foot, shall be compacted to a specified level of relative density. The specified level of relative density shall be a Composite Pay Factor (CPF) of not less than 0.75 when evaluated in accordance with Section 1-06.2, using a minimum of 91 percent of the maximum density. The percent of maximum density shall be determined by WSDOT FOP for AASHTO T 729 when using the nuclear density gauge and WSDOT SOP 736 when using cores to determine density. The specified level of density attained will be determined by the statistical evaluation of the density of the pavement.

The following four new paragraphs are inserted after the first paragraph:

Tests for the determination of the pavement density will be taken in accordance the required procedures for measurement by a nuclear density gauge or roadway cores after completion of the finish rolling.

If the Contracting Agency uses a nuclear density gauge to determine density the test procedures FOP for WAQTC TM 8 and WSDOT SOP T 729 will be used on the day the mix is placed.

Roadway cores for density may be obtained by either the Contracting Agency or the Contractor in accordance with WSDOT SOP 734. The core diameter shall be 4-inches unless other approved by the Engineer. Roadway cores will be tested by the Contracting Agency in accordance with WSDOT FOP for AASHTO T 166.

If the Contract includes the Bid item "Roadway Core" the cores shall be obtained by the Contractor in the presence of the Engineer on the same day the mix is placed and at locations designated by the Engineer. If the Contract does not include the Bid item "Roadway Core" the Contracting Agency will obtain the cores.

5-04.3(10)B4 Test Results

The first paragraph is revised to read:

The results of all compaction acceptance testing and the CPF of the lot after three sublots have been tested will be available to the Contractor through WSDOT's website. Determination of the relative density of the HMA with a nuclear density gauge requires a correlation factor and may require resolution after the correlation factor is known. Acceptance of HMA compaction will be based on the statistical evaluation and CPF so determined.

INFORMATIONAL COPY ONLY - NOT FOR BIDDING

In the second paragraph, the first sentence is revised to read:

> For a sublot that has been tested with a nuclear density gauge that did not meet the minimum of 91 percent of the reference maximum density in a compaction lot with a CPF below 1.00 and thus subject to a price reduction or rejection, the Contractor may request that a core be used for determination of the relative density of the sublot.

In the second sentence of the second paragraph, "moisture-density" is revised to read "density".

In the second paragraph, the fourth sentence is deleted.

5-04.4 Measurement

The following new paragraph is inserted after the first paragraph:

> Roadway cores will be measured per each for the number of cores taken.

The second to last paragraph is deleted.

5-04.5 Payment

The bid item "Removing Temporary Pavement Marking", per linear foot and paragraph following bid item are deleted.

The following new bid item is inserted before the second to last paragraph:

> "Roadway Core", per each.
>
> The Contractor's costs for all other Work associated with the coring (e.g., traffic control) shall be incidental and included within the unit Bid price per each and no additional payments will be made.

Section 6-02, Concrete Structures
August 4, 2014

6-02.3(1) Classification of Structural Concrete

In paragraph two, item number 1 is revised to read:

> Mix design and proportioning specified in Sections 6-02.3(2), 6-02.3(2)A and 6-02.3(2)A1.

Item number 3 is renumbered to 4.

After the preceding Amendments are applied, the following new numbered item is inserted after item number 2:

> 3. Temperature and time for placement requirements specified in Section 6-02.3(4)D.

6-02.3(2) Proportioning Materials

In the third paragraph, the first sentence is revised to read:

> The use of fly ash is required for Class 4000P concrete, except that ground granulated blast furnace slag may be substituted for fly ash at a 1:1 ratio.

INFORMATIONAL COPY ONLY – NOT FOR BIDDING

In the table titled "Cementitious Requirement for Concrete", the row beginning with "4000D" is deleted.

The fourth paragraph is revised to read:

> When both ground granulated blast furnace slag and fly ash are included in the concrete mix, the total weight of both these materials is limited to 40 percent by weight of the total cementitious material for concrete class 4000A, and 50 percent by weight of the total cementitious material for all other classes of concrete.

6-02.3(2)A Contractor Mix Design

The first paragraph is revised to read:

> The Contractor shall provide a mix design in writing to the Engineer for all classes of concrete specified in the Plans except for lean concrete and commercial concrete. No concrete shall be placed until the Engineer has reviewed the mix design. The required average 28-day compressive strength shall be selected in accordance with ACI 318, Chapter 5, Section 5.3.2. ACI 211.1 and ACI 318 shall be used to determine proportions. All proposed concrete mixes except Class 4000D shall meet the requirements in Cementitious Requirement for Concrete in Section 6-02.3(2).

In the fourth paragraph, the fourth sentence is deleted.

In the sixth paragraph, the first sentence is deleted.

In the seventh paragraph, the last sentence is deleted.

The eighth paragraph is revised to read:

> Air content for concrete Class 4000D shall conform to Section 6-02.3(2)A1. For all other concrete, air content shall be a minimum of 4.5 percent and a maximum of 7.5 percent for all concrete placed above the finished ground line.

The following new sub-section is added:

6-02.3(2)A1 Contractor Mix Design for Concrete Class 4000D

All Class 4000D concrete shall be a project specific performance mix design conforming to the following requirements:

1. Aggregate shall use combined gradation in accordance with Section 9-03.1(5) with a nominal maximum aggregate size of 1-1/2 inches.

2. Permeability shall be less than 2,000 coulombs at 56 days in accordance with AASHTO T 277.

3. Freeze-thaw durability shall be provided by one of the following methods:
   a. The concrete shall maintain an air content between 4.5 and 7.5 percent.
   b. The concrete shall maintain a minimum air content that achieves a durability factor of 90 percent, minimum, after 300 cycles in accordance with AASHTO T 161, Procedure A. This air content shall not be less than 3.0 percent. Test samples shall be obtained from concrete batches of a minimum of 3.0 cubic yards.

INFORMATIONAL COPY ONLY - NOT FOR BIDDING

4. Scaling shall have a visual rating less than or equal to 2 after 50 cycles in accordance with ASTM C 672.

5. Shrinkage at 28 days shall be less than 320 micro strain in accordance with AASHTO T 160.

6. Modulus of elasticity shall be measured in accordance with ASTM C 469.

7. Density shall be measured in accordance with ASTM C 138.

The Contractor shall submit the mix design in accordance with Section 6-02.3(2)A. The submittal shall include test reports for all tests listed above that follow the reporting requirements of the AASHTO/ASTM procedures. Samples for testing may be obtained from either laboratory or concrete plant batches. If concrete plant batches are used, the minimum batch size shall be 3.0 cubic yards. The Contractor shall submit the mix design to the Engineer at least 30 calendar days prior to the placement of concrete in the bridge deck.

6-02.3(4)D Temperature and Time For Placement

The first two sentences are revised to read:

Concrete temperatures shall remain between 55ºF and 90ºF while it is being placed, except that Class 4000D concrete temperatures shall remain between 55°F and 75°F during placement. Precast concrete that is heat cured in accordance with Section 6-02.3(25)D shall remain between 50ºF and 90ºF while being placed.

6-02.3(5)A General

The first paragraph is revised to read:

Concrete for the following applications will be accepted based on a Certificate of Compliance to be provided by the supplier as described in Section 6-02.3(5)B:

1. Lean concrete.

2. Commercial concrete.

3. Class 4000P concrete for Roadside Steel Sign Support Foundations.

4. Class 4000P concrete for Type II, III, and CCTV Signal Standard Foundations that are 12'-0" or less in depth.

5. Class 4000P concrete for Type IV and V Strain Pole Foundations that are 12'-0" or less in depth.

6. Class 4000P concrete for Steel Light Standard Foundations Types A & B.

The following new sentence is inserted at the beginning of the second paragraph:

Slip-form barrier concrete will be accepted based on conformance to the requirements for temperature, air content and compressive strength at 28 days for sublots as tested and determined by the Contracting Agency.

6-02.3(5)H Sampling and Testing for Compressive Strength and Initial Curing

The second paragraph is revised to read:

INFORMATIONAL COPY ONLY - NOT FOR BIDDING

The Contractor shall provide and maintain a sufficient number of cure boxes in accordance with WSDOT FOP for AASHTO T 23 for curing concrete cylinders. The cure boxes shall be readily accessible and no more than 500 feet from the point of acceptance testing, unless otherwise approved by the Engineer. The Contractor shall also provide, maintain and operate all necessary power sources and connections needed to operate the cure boxes. The cure boxes shall be in-place and functioning at the specified temperature for curing cylinders prior to concrete placement. Concrete cylinders shall be cured in the cure boxes in accordance with WSDOT FOP for AASHTO T 23. The cure boxes shall have working locks and the Contractor shall provide the Engineer with one key to each of the locks. Once concrete cylinders are placed in the cure box, the cure box shall not be disturbed until the cylinders have been removed. The Contractor shall retain the cure box Temperature Measuring Device log and provide it to the Engineer upon request.

The following new paragraph is inserted after the last paragraph:

All cure box costs shall be incidental to the associated item of work.

6-02.3(6)A2 Cold Weather Protection

The first sentence in the first paragraph is revised to read:

This Specification applies when the weather forecast on the day of concrete placement predicts air temperatures below 35°F at any time during the 7 days following placement.

The first sentence of the second paragraph is revised to read:

The temperature of the concrete shall be maintained above 50°F during the entire curing period or 7 days, whichever is greater.

6-02.3(10)D Concrete Placement, Finishing, and Texturing

This section is supplemented with the following new sub-sections:

6-02.3(10)D1 Test Slab Using Bridge Deck Concrete

After the Contractor receives the Engineer's approval for the Class 4000D concrete mix design, and a minimum of seven calendar days prior to the first placement of bridge deck concrete, the Contractor shall construct a test slab using concrete of the approved mix design.

The test slab may be constructed on grade, shall have a minimum thickness of eight-inches, shall have minimum plan dimensions of 10-feet along all four edges, and shall be square or rectangular.

During construction of the test slab, the Contractor shall demonstrate concrete sampling and testing, use of the concrete temperature monitoring system, the concrete fogging system, concrete placement system, and the concrete finishing operation. The Contractor shall conduct the demonstration using the same type of equipment to be used for the production bridge decks, except that the Contractor may elect to finish the test slab with a hand-operated strike-board.

After the construction of the test slab and the demonstration of bridge deck construction operations is complete, the Contractor shall remove and dispose of the test slab in accordance with Sections 2-02.3 and 2-03.3(7)C.

6-02.3(10)D2 Preparation for Concrete Placement

INFORMATIONAL COPY ONLY - NOT FOR BIDDING

Before placing bridge approach slab concrete, the subgrade shall be constructed in accordance with Sections 2-06 and 5-05.3(6).

Before any concrete is placed, the finishing machine shall be operated over the entire length of the deck/slab to check screed deflection. Concrete placement may begin only if the Engineer approves after this test.

Immediately before placing concrete, the Contractor shall check (and adjust if necessary) all falsework and wedges to minimize settlement and deflection from the added mass of the concrete deck/slab. The Contractor shall also install devices, such as telltales, by which the Engineer can readily measure settlement and deflection.

6-02.3(10)D3 Concrete Placement

The placement operation shall cover the full width of the bridge deck or the full width between construction joints. The Contractor shall locate any construction joint over a beam or web that can support the deck/slab on either side of the joint. The joint shall not occur over a pier unless the Plans permit. Each joint shall be formed vertically and in true alignment. The Contractor shall not release falsework or wedges supporting bridge deck placement sections on either side of a joint until each side has aged as these Specifications require.

Placement of concrete for bridge decks and bridge approach slabs shall comply with Section 6-02.3(6). In placing the concrete, the Contractor shall:

1. Place it (without segregation) against concrete placed earlier, as near as possible to its final position, approximately to grade, and in shallow, closely spaced piles;

2. Consolidate it around reinforcing steel by using vibrators before strike-off by the finishing machine;

3. Not use vibrators to move concrete;

4. Not revibrate any concrete surface areas where workers have stopped prior to screeding;

5. Remove any concrete splashed onto reinforcing steel in adjacent segments before concreting them;

6. Maintain a slight excess of concrete in front of the screed across the entire width of the placement operation;

7. Operate the finishing machine to create a surface that is true and ready for final finish without overfinishing or bringing excessive amounts of mortar to the surface; and

8. Leave a thin, even film of mortar on the concrete surface after the last pass of the finishing machine pan.

Workers shall complete all post screeding operations without walking on the concrete. This may require work bridges spanning the full width of the deck/slab.

After removing the screed supports, the Contractor shall fill the voids with concrete (not mortar).

INFORMATIONAL COPY ONLY - NOT FOR BIDDING

If the surface left by the finishing machine is porous, rough, or has minor irregularities, the Contractor shall float the surface of the concrete. Floating shall leave a smooth and even surface. Float finishing shall be kept to the minimum number of passes necessary to seal the surface. The floats shall be at least 4-feet long. Each transverse pass of the float shall overlap the previous pass by at least half the length of the float. The first floating shall be at right angles to the strike-off. The second floating shall be at right angles to the centerline of the span. A smooth riding surface shall be maintained across construction joints.

The edge of completed roadway slabs at expansion joints and compression seals shall have a 3/8-inch radius.

After floating, but while the concrete remains plastic, the Contractor shall test the entire deck/slab for flatness (allowing for crown, camber, and vertical curvature). The testing shall be done with a 10-foot straightedge held on the surface. The straightedge shall be advanced in successive positions parallel to the centerline, moving not more than one half the length of the straightedge each time it advances. This procedure shall be repeated with the straightedge held perpendicular to the centerline. An acceptable surface shall be one free from deviations of more than 1/8-inch under the 10-foot straightedge.

If the test reveals depressions, the Contractor shall fill them with freshly mixed concrete, strike off, consolidate, and refinish them. High areas shall be cut down and refinished. Retesting and refinishing shall continue until a surface conforming to the requirements specified above is produced.

6-02.3(10)D4 Monitoring Bridge Deck Concrete Temperature After Placement

The Contractor shall monitor and record the concrete temperature and ambient temperature hourly for seven calendar days after placement. The Contractor shall monitor and record concrete temperature by placing two maturity meter temperature monitoring devices in the bridge deck at locations specified by the Engineer. The Contractor shall monitor ambient temperature using maturity meters near the locations where concrete temperature is being monitored. When the bridge deck is being enclosed and heated to meet cold weather requirements, ambient temperature readings shall be taken within the enclosure. The Contractor shall submit the concrete temperature and ambient temperature data to the Engineer in spreadsheet format within 14 calendar days from placing the bridge deck concrete.

The Contractor shall submit the type and model of maturity meter temperature monitoring device, and the associated devices responsible for recording and documenting the temperature and curing time, to the Engineer at least 14 calendar days prior to the pre-concreting conference for the first bridge deck to be cast. The placement and operation of the temperature monitoring devices and associated devices will be an agenda item at the pre-concreting conference for the first bridge deck to be cast.

6-02.3(10)D5 Bridge Deck Concrete Finishing and Texturing

Except as otherwise specified for portions of bridge decks receiving an overlay or sidewalk under the same Contract, the Contractor shall texture the surface of the bridge deck as follows:

> The Contractor shall texture the bridge deck using diamond tipped saw blades mounted on a power driven, self-propelled machine that is designed to texture concrete surfaces. The grooving equipment shall provide grooves that are 1/8" ± 1/64" wide, 3/16" ± 1/16" deep, and spaced at 3/4" ± 1/8". The bridge deck shall not be textured with a metal tined comb.

INFORMATIONAL COPY ONLY - NOT FOR BIDDING

The Contractor shall submit the type of grooving equipment to be used to the Engineer for approval 30 calendar days prior to performing the work. The Contractor shall demonstrate that the method and equipment for texturing the bridge deck will not chip, spall or otherwise damage the deck. The Contractor shall not begin texturing the bridge deck until receiving the Engineer's approval of the Contractor's method and equipment.

Unless otherwise approved by the Engineer, the Contractor shall texture the concrete bridge deck surface either in a longitudinal direction, parallel with centerline or in a transverse direction, perpendicular with centerline. The Contractor shall texture the bridge deck surface to within 3-inches minimum and 15-inches maximum of the edge of concrete at expansion joints, within 1-foot minimum and 2-feet maximum of the curb line, and within 3-inches minimum and 9-inches maximum of the perimeter of bridge drain assemblies.

The Contractor shall contain and collect all concrete dust and debris generated by the bridge deck texturing process, and shall dispose of the collected concrete dust and debris in accordance with Section 2-03.3(7)C.

If the Plans call for placement of a sidewalk or an HMA or concrete overlay on the bridge deck, the Contractor shall produce the final finish of these areas by dragging a strip of damp, seamless burlap lengthwise over the bridge deck or by brooming it lightly. Approximately 3-feet of the drag shall contact the surface, with the least possible bow in its leading edge. It shall be kept wet and free of hardened lumps of concrete. When the burlap drag fails to produce the required finish, the Contractor shall replace it. When not in use, it shall be lifted clear of the bridge deck.

After the bridge deck has cured, the surface shall conform to the surface smoothness requirements specified in Section 6-02.3(10)D3.

The surface texture on any area repaired to address out-of-tolerance surface smoothness shall match closely that of the surrounding bridge deck area at the completion of the repair. Methods used to remove high spots shall cut through the mortar and aggregate without breaking or dislodging the aggregate or causing spalls.

6-02.3(10)D6 Bridge Approach Slab Finishing and Texturing

Bridge approach slabs shall be textured either in accordance with Section 6-02.3(10)D5, or using metal tined combs in the transverse direction, except bridge approach slabs receiving an overlay in the same Contract shall be finished as specified in Section 6-02.3(10)D5 only.

The comb shall be made of a single row of metal tines. It shall leave striations in the fresh concrete approximately 3/16-inch deep by 1/8-inch wide and spaced approximately 1/2-inch apart. The Engineer will decide actual depths at the site. If the comb has not been approved, the Contractor shall obtain the Engineer's approval by demonstrating it on a test section. The Contractor may operate the combs manually or mechanically, either singly or with several placed end to end. The timing and method used shall produce the required texture without displacing larger particles of aggregate.

Texturing shall end 2-feet from curb lines. This 2-foot untextured strip shall be hand finished with a steel trowel.

Surface smoothness, high spots, and low spots shall be addressed as specified in Section 6-02.3(10)D5. The surface texture on any area cut down or built up shall match closely that

INFORMATIONAL COPY ONLY - NOT FOR BIDDING

of the surrounding bridge approach slab area. The entire bridge approach slab shall provide a smooth riding surface.

6-02.3(11) Curing Concrete

Items number 1 through 4 are deleted and replaced with the following 5 new numbered items:

1. Bridge sidewalks, roofs of cut and cover tunnels — curing compound covered by white, reflective type sheeting or continuous wet curing. Curing by either method shall be for at least 10 days.

2. Bridge decks — See Section 6-02.3(11)B.

3. Bridge approach slabs (Class 4000A concrete) - 2 coats of curing compound and continuous wet cure for at least 10-days.

4. Concrete barriers and rail bases – See Section 6-02.3(11)A.

5. All other concrete surfaces — continuous wet cure for at least three days.

In the second paragraph, the first sentence is replaced with the following three new sentences:

During the continuous wet cure, the Contractor shall keep all exposed concrete surfaces saturated with water. Formed concrete surfaces shall be kept in a continuous wet cure by leaving the forms in place. If forms are removed during the continuous wet cure period, the Contractor shall treat the concrete as an exposed concrete surface.

The third paragraph is revised to read:

When curing Class 4000A, two coats of curing compound that complies with Section 9-23.2 shall be applied immediately (not to exceed 15 min.) after tining any portion of the bridge approach slab. The continuous wet cure shall be established as soon as the concrete has set enough to allow covering without damaging the finish.

In the fifth paragraph, the first sentence is revised to read:

If the Plans call for an asphalt overlay on the bridge approach slab, the Contractor shall use the clear curing compound (Type 1, Class B), applying at least 1 gallon per 150 square feet to the concrete surface.

The eighth paragraph is deleted.

6-02.3(11)B Curing Bridge Decks

This new section is supplemented with the following new sub-sections:

6-02.3(11)B1 Equipment

The Contractor shall maintain a wet sheen, without developing pooling or sheeting water, using a fogging apparatus consisting of pressure washers with a minimum nozzle output of 1,500 psi, or other means approved by the Engineer.

The Contractor shall submit a bridge deck curing plan to the Engineer a minimum 14 calendar days prior to the pre-concreting conference. The Contractor's plan shall describe the sequence and timing that will be used to fog the bridge deck, apply pre-soaked burlap, install soaker hoses and cover the deck with white reflective sheeting.

INFORMATIONAL COPY ONLY - NOT FOR BIDDING

6-02.3(11)B2 Curing

The fogging apparatus shall be in place and charged for fogging prior to beginning concrete placement for the bridge deck.

The Contractor shall presoak all burlap to be used to cover the deck during curing.

Immediately after the finishing machine passes over finished concrete, the Contractor shall implement the following tasks:

1. The Contractor shall fog the bridge deck while maintaining a wet sheen without developing pooling or sheeting water.

2. The Contractor shall apply the presoaked burlap to the top surface to fully cover the deck without damaging the finish, other than minor marring of the concrete surface. The Contractor shall not apply curing compound.

3. The Contractor shall continue to keep the burlap wet by fog spraying until the burlap is covered by soaker hoses and white reflective sheeting. The Contractor shall place the soaker hoses and whiter reflective sheeting after the concrete has achieved initial set. The Contractor shall charge the soaker hoses frequently so as to keep the burlap covering the entire deck wet during the course of curing.

As an alternative to tasks 2 and 3 above, the Contractor may propose a curing system using proprietary curing blankets specifically manufactured for bridge deck curing. Details of the proprietary curing blanket system, including product literature and details of how the system is to be installed and maintained, shall be submitted to the Engineer for approval.

The wet curing regime as described shall remain in place for at least 14 consecutive calendar days.

6-02.3(12)A Construction Joints in New Construction

The third paragraph is deleted and replaced with the following three new paragraphs:

If the Plans require a roughened surface on the joint, the Contractor shall strike it off to leave grooves at right angles to the length of the member. Grooves shall be installed using one of the following options:

1. Grooves shall be ½ to 1 inch wide, ¼ to ½ inch deep, and spaced equally at twice the width of the groove. Grooves shall terminate approximately 1 ½-inches from the face of concrete.

2. Grooves shall be 1 to 2 inches wide, a minimum of ½-inch deep, and spaced a maximum of three times the width of the groove. Grooves shall terminate approximately 1 ½-inches from the face of concrete.

If the Engineer approves, the Contractor may use an alternate method to produce a roughened surface on the joint, provided that such an alternate method leaves a roughened surface of at least a ¼-inch amplitude.

If the first strike-off does not produce the required roughness, the Contractor shall repeat the process before the concrete reaches initial set. The final surface shall be clean and without laitance or loose material.

INFORMATIONAL COPY ONLY - NOT FOR BIDDING

6-02.3(15) Date Numerals

The third sentence in the first paragraph is revised to read:

When an existing Structure is widened or when traffic barrier is placed on an existing Structure, the date shall be for the year in which the original Structure was completed.

6-02.3(16) Plans for Falsework and Formwork

This section is revised to read:

The Contractor shall submit all plans for falsework and formwork as Type 2E Working Drawings. Submittal is not required for footing or retaining wall formwork if the wall is 4 feet or less in height (excluding pedestal height).

The design of falsework and formwork shall be based on:

1. Applied loads and conditions which are no less severe than those described in Section 6-02.3(17)A, Design Loads;

2. Allowable stresses and deflections which are no greater than those described in Section 6-02.3(17)B, Allowable Stresses and Deflections;

3. Special loads and requirements no less severe than those described in Section 6-02.3(17)C, Falsework and Formwork at Special Locations;

4. Conditions required by other Sections of 6-02.3(17), Falsework and Formwork.

The falsework and formwork plans shall be scale drawings showing the details of proposed construction, including: sizes and properties of all members and components; spacing of bents, posts, studs, wales, stringers, wedges and bracing; rates of concrete placement, placement sequence, direction of placement, and location of construction joints; identification of falsework devices and safe working loads as well as identification of any bolts or threaded rods used with the devices including their diameter, length, type, grade, and required torque. The falsework plans shall show the proximity of falsework to utilities or any nearby Structures including underground Structures. Formwork accessories shall be identified according to Section 6-02.3(17)H, Formwork Accessories. All assumptions, dimensions, material properties, and other data used in making the structural analysis shall be noted on the drawing.

The Contractor shall furnish associated design calculations to the Engineer as part of the submittal. The design calculations shall show the stresses and deflections in load supporting members. Construction details which may be shown in the form of sketches on the calculation sheets shall be shown in the falsework or formwork drawings as well. Falsework or formwork plans will be rejected in cases where it is necessary to refer to the calculation sheets for information needed for complete understanding of the falsework and formwork plans or how to construct the falsework and formwork.

Each sheet of falsework and formwork plans shall carry the following:

1. The initials and dates of all participating design professionals.

2. Clear notation of all revisions including identification of who authorized the revision, who made the revision, and the date of the revision.

INFORMATIONAL COPY ONLY - NOT FOR BIDDING

3. The Contract number, Contract title, and sequential sheet number. These shall also be on any related documents.

4. Identify where the falsework and formwork plan will be utilized by referencing Contract Plan sheet number and related item or detail.

6-02.3(16)A Nonpreapproved Falsework and Formwork Plans
This section, including title, is deleted in its entirety and replaced with the following:

6-02.3(16)A Vacant

6-02.3(16)B Preapproved Formwork Plans
This section, including title, is revised to read:

6-02.3(16)B Pre-Contract Review of Falsework and Formwork Plans
The Contractor may request pre-contract review of formwork plans for abutments, wingwalls, diaphragms, retaining walls, columns, girders and beams, box culverts, railings, and bulkheads. Plans for falsework supporting the bridge deck for interior spans between precast prestressed concrete girders may also be submitted for pre-contract review.

To obtain pre-contract review, the Contractor shall electronically submit drawings and design calculations in PDF format directly to:

BridgeConstructionSupport@wsdot.wa.gov

The Bridge and Structures Office, Construction Support Engineer will return the falsework or formwork plan to the Contractor with review notes, an effective date of review, and any revisions needed prior to use. For each contract on which the pre-reviewed falsework or formwork plans will be used, the Contractor shall submit a copy to the Engineer. Construction shall not begin until the Engineer has given concurrence.

If the falsework or formwork being constructed has any deviations to the preapproved falsework or formwork plan, the Contractor shall submit plan revisions for review and approval in accordance with Section 6-02.3(16).

6-02.3(17)A Design Loads
The fifth paragraph is revised to read:

Live loads shall consist of a minimum uniform load of not less than 25 psf, applied over the entire falsework plan area, plus the greater of:

1. Actual weights of the deck finishing equipment applied at the rails, or;

2. A minimum load of 75 pounds per linear foot applied at the edge of the bridge deck.

6-02.3(17)J Face Lumber, Studs, Wales, and Metal Forms
The second to last paragraph is deleted.

6-02.3(17)O Early Concrete Test Cylinder Breaks
The third paragraph is revised to read:

INFORMATIONAL COPY ONLY - NOT FOR BIDDING

The cylinders shall be cured in the field in accordance with WSDOT FOP for AASHTO T 23 Section 10.2 Field Curing.

6-02.3(20) Grout for Anchor Bolts and Bridge Bearings

The first five paragraphs are deleted and replaced with the following two new paragraphs:

Grout shall conform to Section 9-20.3(2) for anchor bolts and for bearing assemblies with bearing plates. Grout shall conform to Section 9-20.3(3) for elastomeric bearing pads and fabric pad bearings without bearing plates.

Grout shall be a workable mix with a viscosity that is suitable for the intended application. The Contractor shall receive approval from the Engineer before using the grout.

6-02.3(26)F Prestressing Reinforcement

The last sentence in the fourth paragraph is revised to read:

If the prestressing reinforcement will not be stressed and grouted for more than 7 calendar days after it is placed in the ducts, the Contractor shall place an approved corrosion inhibitor conforming to Federal Specification MIL-I-22110C in the ducts.

6-02.5 Payment

In the paragraph following the bid item "Commercial Concrete", per cubic yard the second sentence is revised to read:

All costs in connection with concrete curing, and furnishing and applying pigmented sealer to concrete surfaces as specified, shall be included in the unit contract price per cubic yard for "Conc. Class ____".

The following new paragraph is inserted after the bid item "Superstructure (name bridge)", lump sum:

All costs in connection with constructing, finishing and removing the bridge deck test slab as specified in Section 6-02.3(10)D1 shall be included in the lump sum Contract price for "Superstructure___" or "Bridge Deck___" for one bridge in each project, as applicable.

The bid item "Cure Box", lump sum and paragraph following bid item are deleted.

Section 8-04 Curbs, Gutters, and Spillways
August 4, 2014

8-04.3(1) Cement Concrete Curbs, Gutters, and Spillways

The first sentence in the fourth paragraph is revised to read:

Expansion joints in the curb or curb and gutter shall be spaced as shown in the Plans, and placed at the beginning and ends of curb returns, drainage Structures, bridges, and cold joints with existing curbs and gutters.

In the third sentence of the fourth paragraph, "¼-inch" is revised to read "⅜-inch".

8-04.3(1)A Extruded Cement Concrete Curb

The second sentence in the second paragraph is revised to read:

INFORMATIONAL COPY ONLY - NOT FOR BIDDING

Cement concrete curbs shall be anchored to the existing pavement by placing steel reinforcing bars 1 foot on each side of every joint.

The third paragraph is revised to read:

Steel reinforcing bars shall meet the dimensions shown in the Standard Plans.

Section 8-20, Illumination, Traffic Signal Systems, Intelligent Transportation Systems, and Electrical
August 4, 2014

8-20.2(1) Equipment List and Drawings

The fifth paragraph is revised to read:

The Contractor will not be required to submit shop drawings for approval for light standards and traffic signal standards conforming to the preapproved plans listed in the Special Provisions. The Contractor may use preapproved plans posted on the WSDOT website with a more current revision date than published in the Special Provisions.

8-20.3(8) Wiring

The second sentence in the eleventh paragraph is revised to read:

Every conductor at every wire termination, connector, or device shall have an approved wire marking sleeve bearing, as its legend, the circuit number indicated in the Contract.

8-20.3(13)A Light Standards

In the third paragraph, the last sentence of item number 1 is revised to read:

Conduit shall extend a maximum of 1 inch above the top of the foundation, including grounding end bushing or end bell bushing.

In the fourth paragraph, the second sentence of item number 1 is revised to read:

Conduits shall be cut to a maximum height of 2 inches above the foundation including grounding end bushing or end bell bushing.

Section 8-23, Temporary Pavement Markings
April 14, 2014

This section's content is deleted in its entirety and replaced with the following new sub-sections:

8-23.1 Description

The Work consists of furnishing, installing, and removing temporary pavement markings. Temporary pavement markings shall be provided where noted in the Plans; for all lane shifts and detours resulting from construction activities; or when permanent markings are removed because of construction operations.

8-23.2 Materials

Materials for temporary markings shall be paint, plastic, tape, raised pavement markers or flexible raised pavement markers. Materials for pavement markings shall meet the following requirements:

INFORMATIONAL COPY ONLY - NOT FOR BIDDING

Raised Pavement Markers	9-21
Temporary Marking Paint	9-34.2(6)
Plastic	9-34.3
Glass Beads for Pavement Marking Materials	9-34.4
Temporary Pavement Marking Tape	9-34.5
Temporary Flexible Raised Pavement Markers	9-34.6

8.23.3 Construction Requirements

8-23.3(1) General

The Contractor shall select the type of pavement marking material in accordance with the Contract.

8-23.3(2) Preliminary Spotting

All preliminary layout and marking in preparation for application or removal of temporary pavement markings shall be the responsibility of the Contractor.

8-23.3(3) Preparation of Roadway Surface

Surface preparation for temporary pavement markings shall be in accordance with the manufacturer's recommendations.

8-23.3(4) Pavement Marking Application

8-23.3(4)A Temporary Pavement Markings – Short Duration

Temporary pavement markings – short duration shall meet the following requirements:

Temporary Center Line – A BROKEN line used to delineate adjacent lanes of traffic moving in opposite directions. The broken pattern shall be based on a 40-foot unit, consisting of a 4-foot line with a 36-foot gap if paint or tape is used. If temporary raised pavement markers are used, the pattern shall be based on a 40-foot unit, consisting of a grouping of three temporary raised pavement markers, each spaced 3 feet apart, with a 34 foot gap.

Temporary Edge Line – A SOLID line used on the edges of Traveled Way. The line shall be continuous if paint or tape is used. If temporary raised pavement markers are used, the line shall consist of markers installed continuously at 5-foot spacing.

Temporary Lane Line – A BROKEN line used to delineate adjacent lanes with traffic traveling in the same direction. The broken pattern shall be based on a 40-foot unit, consisting of a 4-foot line with a 36-foot gap, if paint or tape is used. If temporary raised pavement markers are used, the pattern shall be based on a 40-foot unit, consisting of a grouping of three temporary raised pavement markers, each spaced 3 feet apart, with a 34 foot gap.

Lane line and right edge line shall be white in color. Center line and left edge line shall be yellow in color. Edge lines shall be installed only if specifically required in the Contract. All temporary pavement markings shall be retroreflective.

INFORMATIONAL COPY ONLY - NOT FOR BIDDING

8-23.3(4)A1 Temporary Pavement Marking Paint
Paint used for short duration temporary pavement markings shall be applied in one application at a thickness of 15 mils or 108 square feet per gallon. Glass beads shall be in accordance with Section 8-22.3(3)G.

8-23.3(4)A2 Temporary Pavement Marking Tape
Application of temporary pavement marking tape shall be in conformance with the manufacturer's recommendations.

Black mask pavement marking tape shall mask the existing line in its entirety.

8-23.3(4)A3 Temporary Raised Pavement Markers
Temporary raised pavement markers are not allowed on bituminous surface treatments.

8-23.3(4)A4 Temporary Flexible Raised Pavement Markers
Flexible raised pavement markers are required for new applications of bituminous surface treatments. Flexible raised pavement markers are not allowed on other pavement types unless otherwise specified or approved by the Engineer. Flexible raised pavement markers shall be installed with the protective cover in place. The cover shall be removed immediately after spraying asphaltic material.

8-23.3(4)B Temporary Pavement Markings – Long Duration
Application of paint, pavement marking tape and plastic for long duration pavement markings shall meet the requirements of Section 8-22.3(3); application of raised pavement markers shall meet the requirements of Section 8-09.3; and application of flexible pavement markings shall be in conformance with the manufacturer's recommendations.

8-23.3(4)C Tolerance for Lines
Tolerance for lines shall conform to Section 8-22.3(4).

8-23.3(4)D Maintenance of Pavement Markings
Temporary pavement markings shall be maintained in serviceable condition throughout the project until permanent pavement markings are installed. As directed by the Engineer; temporary pavement markings that are damaged, including normal wear by traffic, shall be repaired or replaced immediately. Repaired and replaced pavement markings shall meet the requirements for the original pavement marking.

8-23.3(4)E Removal of Pavement Markings
Removal of temporary paint is not required prior to paving; all other temporary pavement markings shall be removed.

All temporary pavement markings that are required on the wearing course prior to construction of permanent pavement markings and are not a part of the permanent markings shall be completely removed concurrent with or immediately subsequent to the construction of the permanent pavement markings. Temporary flexible raised pavement markers on bituminous surface treatment pavements shall be cut off flush with the surface if their location conflicts with the alignment of the permanent pavement markings.

INFORMATIONAL COPY ONLY - NOT FOR BIDDING

All damage to the permanent Work caused by removing temporary pavement markings shall be repaired by the Contractor at no additional cost to the Contracting Agency.

8-23.4 Measurement

Temporary pavement markings will be measured by the linear foot of each installed line or grouping of markers, with no deduction for gaps in the line or markers and no additional measurement for the second application of paint required for long duration paint lines. Short duration and long duration temporary pavement markings will be measured for the initial installation only; maintenance of lines will not be measured.

8-23.5 Payment

Payment will be made in accordance with Section 1-04.1, for each of the following Bid items that are included in the Proposal:

"Temporary Pavement Marking – Short Duration", per linear foot.

"Temporary Pavement Marking – Long Duration", per linear foot.

The unit Contract price per linear foot for "Temporary Pavement Marking – Short Duration" and "Temporary Pavement Marking – Long Duration" shall be full pay for all Work.

Section 9-03, Aggregates
August 4, 2014

9-03.1(2)C Use of Substandard Gradings

This section including title is deleted in its entirety and replaced with the following:

Vacant

9-03.1(4)C Grading

In the second paragraph, the first sentence is deleted.

The third paragraph is deleted.

9-03.1(5)B Grading

The last paragraph is revised to read:

The Contracting Agency may sample each aggregate component prior to introduction to the weigh batcher or as otherwise determined by the Engineer. Each component will be sieve analyzed separately in accordance with WSDOT FOP for WAQTC/AASHTO Test Method T-27/11. All aggregate components will be mathematically re-combined by the proportions (percent of total aggregate by weight) provided by the Contractor on Concrete Mix Design Form 350-040.

9-03.8(1) General Requirements

The first paragraph up until the colon is revised to read:

Preliminary testing of aggregates for source approval shall meet the following test requirements:

The list in the first paragraph is supplemented with the following:

INFORMATIONAL COPY ONLY - NOT FOR BIDDING

Sand Equivalent 45 min.

The following new paragraph is inserted after the first paragraph:

Aggregate sources that have 100 percent of the mineral material passing the No. 4 sieve shall be limited to no more than 5 percent of the total weight of aggregate.

9-03.14(3) Common Borrow

This section is revised to read:

Material for common borrow shall consist of granular or nongranular soil and/or aggregate which is free of deleterious material. Deleterious material includes wood, organic waste, coal, charcoal, or any other extraneous or objectionable material. The material shall not contain more than 3 percent organic material by weight. The plasticity index shall be determined using test method AASHTO T 89 and AASHTO T 90.

The material shall meet one of the options in the soil plasticity table below.

Soil Plasticity Table

Option	Sieve	Percent Passing	Plasticity Index
1	No. 200	0 - 12	N/A
2	No. 200	12.1 - 35	6 or Less
3	No. 200	Above 35	0

All percentages are by weight.

If requested by the Contractor, the plasticity index may be increased with the approval of the Engineer.

9-03.14(4) Gravel Borrow for Structural Earth Wall

In the second table, the row beginning with "pH" is revised to read:

pH	WSDOT Test Method T 417	4.5 - 9	5 – 10

Section 9-29, Illumination, Signal, Electrical
August 4, 2014

9-29.2(1)B Heavy Duty Junction Boxes

The second paragraph is revised to read:

The Heavy-Duty Junction Box steel frame, lid support and lid fabricated from steel plate and shapes shall be painted with a shop applied, inorganic zinc primer in accordance with Section 6-07.3. Ductile iron and gray iron castings shall not be painted.

The following new paragraph is inserted after the second paragraph:

INFORMATIONAL COPY ONLY - NOT FOR BIDDING

The concrete used in Heavy-Duty Junction Boxes shall have a minimum compressive strength of 4,000 psi.

In the fourth paragraph (after the preceding Amendment is applied), the table is revised to read:

Materials	Requirement
Concrete	Section 6-02
Reinforcing Steel	Section 9-07
Lid	ASTM A 786 diamond plate steel, rolled from plate complying with ASTM A 572, grade 50 or ASTM A 588, and having a min. CVN toughness of 20 ft-lb at 40 degrees F. Or Ductile iron casting meeting Section 9-05.15
Frame and stiffener plates	ASTM A 572 grade 50 or ASTM A 588, both with min. CVN toughness of 20 ft-lb at 40 degrees F Or Gray iron casting meeting Section 9-05.15
Anchors (studs)	Section 9-06.15
Threaded Anchors for Gray Iron Frame	ASTM F1554 grade 55 Headed Anchor Requirements
Bolts, Studs, Nuts, Washers	ASTM F 593 or A 193, Type 304 or 316, or Stainless steel grade 302, 304, or 316 in accordance with approved shop drawings
Hinges and Locking and Latching Mechanism and associated Hardware and Bolts	In accordance with approved shop drawings
Safety Bars	In accordance with approved shop drawings

The last paragraph is revised to read:

The bearing seat and lid perimeter shall be free from burrs, dirt, and other foreign debris that would prevent solid seating. Bolts and nuts shall be liberally coated with anti-seize compound. Bolts shall be installed snug tight. The bearing seat and lid perimeter shall be machined to allow a minimum of 75 percent of the bearing areas to be seated with a tolerance of 0.0 to 0.005 inches measured with a feeler gage. The bearing area percentage will be measured for each side of the lid as it bears on the frame.

9-29.2(2) Standard Duty and Heavy-Duty Cable Vaults and Pull Boxes

This section's title is revised to read:

Small Cable Vaults, Standard Duty Cable Vaults, Heavy-Duty Cable Vaults, Standard Duty Pull Boxes, and Heavy-Duty Pull Boxes

In the first paragraph, the first sentence is revised to read:

Small, Standard Duty and Heavy-Duty Cable Vaults and Standard Duty and Heavy-Duty Pull Boxes shall be constructed as a concrete box and as a concrete lid.

INFORMATIONAL COPY ONLY - NOT FOR BIDDING

9-29.2(2)A Standard Duty Cable Vaults and Pull Boxes

This section's title is revised to read:

> **Small Cable Vaults, Standard Duty Cable Vaults, and Standard Duty Pull Boxes**

The first paragraph is revised to read:

> Small and Standard Duty Cable Vaults and Standard Duty Pull boxes shall be concrete and have a minimum load rating of 22,500 pounds and be tested in accordance with Section 9-29.2(1)C for concrete Standard Duty Junction Boxes.

In the second paragraph, the first sentence is revised to read:

> Concrete for Small and Standard Duty Cable Vaults and Standard Duty Pull Boxes shall have a minimum compressive strength of 4,000 psi.

In the third paragraph, the first sentence is revised to read:

> All Small and Standard Duty Cable Vaults and Standard Duty Pull Boxes placed in sidewalks, walkways, and shared-use paths shall have slip-resistant surfaces.

The fourth paragraph (up until the colon) is revised to read:

> Materials for Small and Standard Duty Cable Vaults and Standard Duty Pull Boxes shall conform to the following:

9-29.3 Fiber Optic Cable, Electrical Conductors, and Cable

The following new subsection is added:

> **9-29.3(3) Wire Marking Sleeves**
> Wire marking sleeves shall be full-circle in design, non-adhesive, printable using an indelible ink and shall fit snugly on the wire or cable. Marking sleeves shall be made from a PVC or polyolefin, and provide permanent identification for wires and cables.

Section 9-34, Pavement Marking Material
August 4, 2014

9-34.2 Paint

The second paragraph is revised to read:

> Blue and black paint shall comply with the requirements of yellow paint in Section 9-34.2(4) and Section 9-34.2(5), with the exception that blue and black paints do not need to meet the requirements for titanium dioxide, directional reflectance, and contrast ratio.

9-34.5 Temporary Pavement Marking Tape

This section is revised to read:

> Biodegradable tape with paper backing is not allowed.

This section is supplemented with the following new sub-sections:

> **9-34.5(1) Temporary Pavement Marking Tape – Short Duration**

INFORMATIONAL COPY ONLY - NOT FOR BIDDING

Temporary pavement marking tape for short duration shall conform to ASTM D4592 Type II except that black tape, black mask tape and the black portion of the contrast removable tape, shall be non-reflective.

9-34.5(2) Temporary Pavement Marking Tape – Long Duration

Temporary pavement marking tape for long duration shall conform to ASTM D4592 Type I. Temporary pavement marking tape for long duration, except for black tape, shall have a minimum initial coefficient of retroreflective luminance of 200 $mcd*m^{-2}*lx^{-1}$ when measured in accordance with ASTM E 2832 or ASTM E 2177. Black tape, black mask tape and the black portion of the contrast removable tape, shall be non-reflective.

9-34.6 Temporary Raised Pavement Markers

This section's title is revised to read:

Temporary Flexible Raised Pavement Markers

The second paragraph is deleted.

Section 9-35, Temporary Traffic Control Materials
August 4, 2014

9-35.0 General Requirements

The following item is deleted from the list of temporary traffic control materials:

Barrier Drums

The last sentence of the second paragraph is revised to read:

Certification for crashworthiness according to NCHRP 350 or the Manual for Assessing Safety Hardware (MASH) will be required as described in Section 1-10.2(3).

9-35.2 Construction Signs

The first sentence is revised to read:

Construction signs shall conform to the requirements of the MUTCD and shall meet the requirements of NCHRP Report 350 for Category 2 devices or MASH.

9-35.7 Traffic Safety Drums

The third paragraph is revised to read:

Drums and light units shall meet the crashworthiness requirements of NCHRP 350 or MASH as described in Section 1-10.2(3).

9-35.8 Barrier Drums

This section including title is deleted in its entirety and replaced with the following:

9-35.8 Vacant

9-35.12 Transportable Attenuator

In the first paragraph, the fourth sentence is revised to read:

INFORMATIONAL COPY ONLY - NOT FOR BIDDING

The Contractor shall provide certification that the transportable attenuator complies with NCHRP 350 Test level 3 or MASH Test Level 3 requirements.

9-35.13 Tall Channelizing Devices

In the sixth paragraph, the last sentence is revised to read:

The method of attachment must ensure that the light does not separate from the device upon impact and light units shall meet the crashworthiness requirements of NCHRP 350 or MASH as described in Section 1-10.2(3).

INFORMATIONAL COPY ONLY - NOT FOR BIDDING

INFORMATIONAL COPY ONLY - NOT FOR BIDDING

SPECIAL PROVISIONS

The following Special Provisions are made a part of this contract and supersede any conflicting provisions of the 2014 Standard Specifications for Road, Bridge, and Municipal Construction, and the foregoing Amendments to the Standard Specifications.

Several types of Special Provisions are included in this contract; General, Region, Bridges and Structures, and Project Specific. Special Provisions types are differentiated as follows:

(date)	General Special Provision
(******)	Notes a revision to a General Special Provision and also notes a Project Specific Special Provision.
(Regions[1] date)	Region Special Provision
(BSP date)	Bridges and Structures Special Provision

General Special Provisions are similar to Standard Specifications in that they typically apply to many projects, usually in more than one Region. Usually, the only difference from one project to another is the inclusion of variable project data, inserted as a "fill-in".

Region Special Provisions are commonly applicable within the designated Region. Region
designations are as follows:

Regions[1]	
ER	Eastern Region
NCR	North Central Region
NWR	Northwest Region
OR	Olympic Region
SCR	South Central Region
SWR	Southwest Region
WSF	Washington State Ferries Division

Bridges and Structures Special Provisions are similar to Standard Specifications in that they typically apply to many projects, usually in more than one Region. Usually, the only difference from one project to another is the inclusion of variable project data, inserted as a "fill-in".

Project Specific Special Provisions normally appear only in the contract for which they were developed.

DIVISION 1 GENERAL REQUIREMENTS

DESCRIPTION OF WORK

(******)

This contract provides for the construction of 3.32 miles of HMA grind/inlay on Stratford Road, from MP 1.11 to MP 4.43, and the construction of 1.60 miles of HMA grind/inlay on Patton Blvd., from MP 0.00 to MP 1.60, Patton Blvd. is a four lane county road with intermittent turn lanes, and Stratford Road is both a two lane and four lane county road with intermittent turn lanes, both roads are in Grant County, WA, and includes planing

INFORMATIONAL COPY ONLY - NOT FOR BIDDING

bituminous pavement, hot mix asphalt, project temporary traffic control, painted centerline and edge line and other work all in accordance with the attached Contract Plans, these Contract Provisions and the Standard Specifications.

DEFINITIONS AND TERMS

1-01.3 Definitions

(March 8, 2013 APWA GSP)

Delete the heading **Completion Dates** and the three paragraphs that follow it, and replace them with the following:

Dates

Bid Opening Date
The date on which the Contracting Agency publicly opens and reads the Bids.

Award Date
The date of the formal decision of the Contracting Agency to accept the lowest responsible and responsive Bidder for the Work.

Contract Execution Date
The date the Contracting Agency officially binds the Agency to the Contract.

Notice to Proceed Date
The date stated in the Notice to Proceed on which the Contract time begins.

Substantial Completion Date
The day the Engineer determines the Contracting Agency has full and unrestricted use and benefit of the facilities, both from the operational and safety standpoint, any remaining traffic disruptions will be rare and brief, and only minor incidental work, replacement of temporary substitute facilities, plant establishment periods, or correction or repair remains for the Physical Completion of the total Contract.

Physical Completion Date
The day all of the Work is physically completed on the project. All documentation required by the Contract and required by law does not necessarily need to be furnished by the Contractor by this date.

Completion Date
The day all the Work specified in the Contract is completed and all the obligations of the Contractor under the contract are fulfilled by the Contractor. All documentation required by the Contract and required by law must be furnished by the Contractor before establishment of this date.

Final Acceptance Date
The date on which the Contracting Agency accepts the Work as complete.

Supplement this Section with the following:

All references in the Standard Specifications, Amendments, or WSDOT General Special Provisions, to the terms "State", "Department of Transportation", "Washington State Transportation Commission", "Commission", "Secretary of Transportation", "Secretary", "Headquarters", and "State Treasurer" shall be revised to read "Contracting Agency".

All references to "State Materials Laboratory" shall be revised to read "Contracting Agency designated location".

INFORMATIONAL COPY ONLY - NOT FOR BIDDING

All references to "final contract voucher certification" shall be interpreted to mean the final payment form established by the Contracting Agency.

The venue of all causes of action arising from the advertisement, award, execution, and performance of the contract shall be in the Superior Court of the County where the Contracting Agency's headquarters are located.

Additive

A supplemental unit of work or group of bid items, identified separately in the Bid Proposal, which may, at the discretion of the Contracting Agency, be awarded in addition to the base bid.

Alternate

One of two or more units of work or groups of bid items, identified separately in the Bid Proposal, from which the Contracting Agency may make a choice between different methods or material of construction for performing the same work.

Business Day

A business day is any day from Monday through Friday except holidays as listed in Section 1-08.5.

Contract Bond

The definition in the Standard Specifications for "Contract Bond" applies to whatever bond form(s) are required by the Contract Documents, which may be a combination of a Payment Bond and a Performance Bond.

Contract Documents

See definition for "Contract".

Contract Time

The period of time established by the terms and conditions of the Contract within which the Work must be physically completed.

Notice of Award

The written notice from the Contracting Agency to the successful Bidder signifying the Contracting Agency's acceptance of the Bid Proposal.

Notice to Proceed

The written notice from the Contracting Agency or Engineer to the Contractor authorizing and directing the Contractor to proceed with the Work and establishing the date on which the Contract time begins.

Traffic

Both vehicular and non-vehicular traffic, such as pedestrians, bicyclists, wheelchairs, and equestrian traffic.

BID PROCEDURES AND CONDITIONS

1-02.1 Prequalification of Bidders

Delete this Section and replace it with the following:

INFORMATIONAL COPY ONLY - NOT FOR BIDDING

1-02.1 Qualifications of Bidder

(******)
Bidders must meet the minimum qualifications of RCW 39.04.350(1), as amended:

Before award of a public works contract, a bidder must meet the following responsibility criteria to be considered a responsible bidder and qualified to be awarded a public works project. The bidder must:

(a) At the time of bid submittal, have a certificate of registration in compliance with chapter 18.27 RCW;
(b) Have a current state unified business identifier number;
(c) If applicable, have industrial insurance coverage for the bidder's employees working in Washington as required in Title 51 RCW; an employment security department number as required in Title 50 RCW; and a state excise tax registration number as required in Title 82 RCW; and
(d) Not be disqualified from bidding on any public works contract under RCW 39.06.010 or 39.12.065(3).
(e) Bidders shall be qualified by experience, financing, equipment, and organization to do the work called for in the Contract Documents. The Contracting Agency reserves the right to take whatever action it deems necessary to ascertain the ability of the bidder to perform the work satisfactorily. The Contracting Agency's actions may include a pre-qualification procedure prior to the bidder being furnished a proposal form on any contract, or a pre-award survey of the bidder's qualifications prior to award.

1-02.2 Plans and Specifications

(June 27, 2011 APWA GSP)

Delete this section and replace it with the following:

Information as to where Bid Documents can be obtained or reviewed can be found in the Call for Bids (Advertisement for Bids) for the work.

After award of the contract, plans and specifications will be issued to the Contractor at no cost as detailed below:

To Prime Contractor	No. of Sets	Basis of Distribution
Reduced plans (11" x 17")	4	Furnished automatically upon award.
Contract Provisions	4	Furnished automatically upon award.

INFORMATIONAL COPY ONLY NOT FOR BIDDING

Large plans (e.g., 22" x 34")	0	Furnished only upon request.

Additional plans and Contract Provisions may be obtained by the Contractor from the source stated in the Call for Bids, at the Contractor's own expense.

1-02.5 Proposal Forms

(June 27, 2011 APWA GSP)

Delete this section and replace it with the following:

The Proposal Form will identify the project and its location and describe the work. It will also list estimated quantities, units of measurement, the items of work, and the materials to be furnished at the unit bid prices. The bidder shall complete spaces on the proposal form that call for, but are not limited to, unit prices; extensions; summations; the total bid amount; signatures; date; and, where applicable, retail sales taxes and acknowledgment of addenda; the bidder's name, address, telephone number, and signature; the bidder's D/M/WBE commitment, if applicable; a State of Washington Contractor's Registration Number; and a Business License Number, if applicable. Bids shall be completed by typing or shall be printed in ink by hand, preferably in black ink. The required certifications are included as part of the Proposal Form.

The Contracting Agency reserves the right to arrange the proposal forms with alternates and additives, if such be to the advantage of the Contracting Agency. The bidder shall bid on all alternates and additives set forth in the Proposal Form unless otherwise specified.

1-02.6 Preparation of Proposal

(June 27, 2011 APWA GSP)

Supplement the second paragraph with the following:

4. If a minimum bid amount has been established for any item, the unit or lump sum price must equal or exceed the minimum amount stated.

5. Any correction to a bid made by interlineation, alteration, or erasure, shall be initialed by the signer of the bid.

Delete the last paragraph, and replace it with the following:

The Bidder shall make no stipulation on the Bid Form, nor qualify the bid in any manner.

A bid by a corporation shall be executed in the corporate name, by the president or a vice president (or other corporate officer accompanied by evidence of authority to sign).

A bid by a partnership shall be executed in the partnership name, and signed by a partner. A copy of the partnership agreement shall be submitted with the Bid Form if any D/M/WBE requirements are to be satisfied through such an agreement.
A bid by a joint venture shall be executed in the joint venture name and signed by a member of the joint venture. A copy of the joint venture agreement shall be submitted with the Bid Form if any D/W/MBE requirements are to be satisfied through such an agreement.

INFORMATIONAL COPY ONLY - NOT FOR BIDDING

1-02.7 Bid Deposit

(March 8, 2013 APWA GSP)

Supplement this section with the following:

Bid bonds shall contain the following:

1. Contracting Agency-assigned number for the project;
2. Name of the project;
3. The Contracting Agency named as obligee;
4. The amount of the bid bond stated either as a dollar figure or as a percentage which represents five percent of the maximum bid amount that could be awarded;
5. Signature of the bidder's officer empowered to sign official statements. The signature of the person authorized to submit the bid should agree with the signature on the bond, and the title of the person must accompany the said signature;
6. The signature of the surety's officer empowered to sign the bond and the power of attorney.

If so stated in the Contract Provisions, bidder must use the bond form included in the Contract Provisions.

If so stated in the Contract Provisions, cash will not be accepted for a bid deposit.

1-02.9 Delivery of Proposal

(August 15, 2012 APWA GSP, Option A)

Delete this section and replace it with the following:

Each proposal shall be submitted in a sealed envelope, with the Project Name and Project Number as stated in the Call for Bids clearly marked on the outside of the envelope, or as otherwise required in the Bid Documents, to ensure proper handling and delivery.

If the project has FHWA funding and requires DBE Written Confirmation Documents or Good Faith Effort Documentation, then to be considered responsive, the Bidder shall submit with their Bid Proposal, written Confirmation Documentation from each DBE firm listed on the Bidder's completed DBE Utilization Certification, form 272-056A EF, as required by Section 1-02.6.

The Contracting Agency will not open or consider any Bid Proposal that is received after the time specified in the Call for Bids for receipt of Bid Proposals, or received in a location other than that specified in the Call for Bids.

Public Opening Of Proposals

Section 1-02.12 is supplemented with the following:

(******)

Date Of Opening Bids

Sealed bids are to be received at the following location prior to the time specified:

The Office of the Board of County Commissioners, Grant County Courthouse, Room 207, 35 C St. NW, P.O. Box 37, Ephrata, WA 98823

INFORMATIONAL COPY ONLY - NOT FOR BIDDING

The bid opening date for this project is **September 23, 2014**. Bids received will be publicly opened and read after **1:30 P.M.** Pacific Time on this date.

Irregular Proposals

(March 13, 2012 APWA GSP)

Revise item 1 to read:

1. A proposal will be considered irregular and will be rejected if:

a. The Bidder is not prequalified <u>when so required</u>;

b. The authorized proposal form furnished by the Contracting Agency is not used or is altered;

c. The completed proposal form contains any unauthorized additions, deletions, alternate Bids, or conditions;

d. The Bidder adds provisions reserving the right to reject or accept the award, or enter into the Contract;

e. A price per unit cannot be determined from the Bid Proposal;

f. The Proposal form is not properly executed;

g. The Bidder fails to submit or properly complete a Subcontractor list, if applicable, as required in Section 1-02.6;

h. The Bidder fails to submit or properly complete a Disadvantaged Business Enterprise Certification, if applicable, as required in Section 1-02.6;

i. The Bidder fails to submit written confirmation from each DBE firm listed on the Bidder's completed DBE Utilization Certification that they are in agreement with the bidders DBE participation commitment, if applicable, as required in Section 1-02.6, or if the written confirmation that is submitted fails to meet the requirements of the Special Provisions;

j The Bidder fails to submit DBE Good Faith Effort documentation, if applicable, as required in Section 1-02.6, or if the documentation that is submitted fails to demonstrate that a Good Faith Effort to meet the Condition of Award was made;

k. The Bid Proposal does not constitute a definite and unqualified offer to meet the material terms of the Bid invitation; or

l. <u>More than one proposal is submitted for the same project from a Bidder under the same or different names.</u>

Disqualification of Bidders

(March 8, 2013 APWA GSP, Option B)

Delete this Section and replace it with the following:

A Bidder will be deemed not responsible if the Bidder does not meet the mandatory bidder responsibility criteria in RCW 39.04.350(1), as amended; or does not meet the following Supplemental Criteria:

1. **<u>Delinquent State Taxes</u>**

A <u>Criterion</u>: The Bidder shall not owe delinquent taxes to the Washington State Department of Revenue without a payment plan approved by the Department of Revenue.

INFORMATIONAL COPY ONLY - NOT FOR BIDDING

B. Documentation: The Bidder shall not be listed on the Washington State Department of Revenue's "Delinquent Taxpayer List" website: http://dor.wa.gov/content/fileandpaytaxes/latefiling/dtlwest.aspx , or if they are so listed, they must submit a written payment plan approved by the Department of Revenue, to the Contracting Agency by the deadline listed below.

2. **Federal Debarment**

A Criterion: The Bidder shall not currently be debarred or suspended by the Federal government.

B. Documentation: The Bidder shall not be listed as having an "active exclusion" on the U.S. government's "System for Award Management" database (www.sam.gov).

3. **Subcontractor Responsibility**

A Criterion: The Bidder's standard subcontract form shall include the subcontractor responsibility language required by RCW 39.06.020, and the Bidder shall have an established procedure which it utilizes to validate the responsibility of each of its subcontractors. The Bidder's subcontract form shall also include a requirement that each of its subcontractors shall have and document a similar procedure to determine whether the sub-tier subcontractors with whom it contracts are also "responsible" subcontractors as defined by RCW 39.06.020.

B. Documentation: The Bidder, if and when required as detailed below, shall submit a copy of its standard subcontract form for review by the Contracting Agency, and a written description of its procedure for validating the responsibility of subcontractors with which it contracts.

4. **Prevailing Wages**

A Criterion: The Bidder shall not have a record of prevailing wage violations as determined by WA Labor & Industries in the five years prior to the bid submittal date, that demonstrates a pattern of failing to pay workers prevailing wages, unless there are extenuating circumstances and such circumstances are deemed acceptable to the Contracting Agency.

B. Documentation: The Bidder, if and when required as detailed below, shall submit a list of all prevailing wage violations in the five years prior to the bid submittal date, along with an explanation of each violation and how it was resolved. The Contracting Agency will evaluate these explanations and the resolution of each complaint to determine whether the violation demonstrate a pattern of failing to pay its workers prevailing wages as required.

5. **Claims Against Retainage and Bonds**

A Criterion: The Bidder shall not have a record of excessive claims filed against the retainage or payment bonds for public works projects in the three years prior to the bid submittal date, that demonstrate a lack of effective management by the Bidder of making timely and appropriate payments to its subcontractors, suppliers, and workers, unless there are extenuating circumstances and such circumstances are deemed acceptable to the Contracting Agency.

INFORMATIONAL COPY ONLY - NOT FOR BIDDING

B. Documentation: The Bidder, if and when required as detailed below, shall submit a list of the public works projects completed in the three years prior to the bid submittal date that have had claims against retainage and bonds and include for each project the following information:

- Name of project
- The owner and contact information for the owner;
- A list of claims filed against the retainage and/or payment bond for any of the projects listed;
- A written explanation of the circumstances surrounding each claim and the ultimate resolution of the claim.

6. **Public Bidding Crime**

A Criterion: The Bidder and/or its owners shall not have been convicted of a crime involving bidding on a public works contract in the five years prior to the bid submittal date.

B. Documentation: The Bidder, if and when required as detailed below, shall sign a statement (on a form to be provided by the Contracting Agency) that the Bidder and/or its owners have not been convicted of a crime involving bidding on a public works contract.

7. **Termination for Cause / Termination for Default**

A Criterion: The Bidder shall not have had any public works contract terminated for cause or terminated for default by a government agency in the five years prior to the bid submittal date, unless there are extenuating circumstances and such circumstances are deemed acceptable to the Contracting Agency.

B. Documentation: The Bidder, if and when required as detailed below, shall sign a statement (on a form to be provided by the Contracting Agency) that the Bidder has not had any public works contract terminated for cause or terminated for default by a government agency in the five years prior to the bid submittal date; or if Bidder was terminated, describe the circumstances. .

8. **Lawsuits**

A Criterion: The Bidder shall not have lawsuits with judgments entered against the Bidder in the five years prior to the bid submittal date that demonstrate a pattern of failing to meet the terms of contracts, unless there are extenuating circumstances and such circumstances are deemed acceptable to the Contracting Agency

B. Documentation: The Bidder, if and when required as detailed below, shall sign a statement (on a form to be provided by the Contracting Agency) that the Bidder has not had any lawsuits with judgments entered against the Bidder in the five years prior to the bid submittal date that demonstrate a pattern of failing to meet the terms of contracts, or shall submit a list of all lawsuits with judgments entered against the Bidder in the five years prior to the bid submittal date, along with a written explanation of the circumstances surrounding each such lawsuit. The Contracting Agency shall evaluate these explanations to

INFORMATIONAL COPY ONLY - NOT FOR BIDDING

determine whether the lawsuits demonstrate a pattern of failing to meet of terms of construction related contracts

As evidence that the Bidder meets the mandatory and supplemental responsibility criteria stated above, the apparent two lowest Bidders must submit to the Contracting Agency by 12:00 P.M. (noon) of the second business day following the bid submittal deadline, a written statement verifying that the Bidder meets all of the mandatory and supplemental criteria together with supporting documentation including but not limited to that detailed above (sufficient in the sole judgment of the Contracting Agency) demonstrating compliance with all mandatory and supplemental responsibility criteria. The Contracting Agency reserves the right to request such documentation from other Bidders as well, and to request further documentation as needed to assess Bidder responsibility. The Contracting Agency also reserves the right to obtain information from third-parties and independent sources of information concerning a Bidder's compliance with the mandatory and supplemental criteria, and to use that information in their evaluation. The Contracting Agency may (but is not required to) consider mitigating factors in determining whether the Bidder complies with the requirements of the supplemental criteria.

The basis for evaluation of Bidder compliance with these mandatory and supplemental criteria shall include any documents or facts obtained by Contracting Agency (whether from the Bidder or third parties) including but not limited to: (i) financial, historical, or operational data from the Bidder; (ii) information obtained directly by the Contracting Agency from others for whom the Bidder has worked, or other public agencies or private enterprises; and (iii) any additional information obtained by the Contracting Agency which is believed to be relevant to the matter.

If the Contracting Agency determines the Bidder does not meet the bidder responsibility criteria above and is therefore not a responsible Bidder, the Contracting Agency shall notify the Bidder in writing, with the reasons for its determination. If the Bidder disagrees with this determination, it may appeal the determination within two (2) business days of the Contracting Agency's determination by presenting its appeal and any additional information to the Contracting Agency. The Contracting Agency will consider the appeal and any additional information before issuing its final determination. If the final determination affirms that the Bidder is not responsible, the Contracting Agency will not execute a contract with any other Bidder until at least two business days after the Bidder determined to be not responsible has received the Contracting Agency's final determination.

Request to Change Supplemental Bidder Responsibility Criteria Prior To Bid: Bidders with concerns about the relevancy or restrictiveness of the Supplemental Bidder Responsibility Criteria may make or submit requests to the Contracting Agency to modify the criteria. Such requests shall be in writing, describe the nature of the concerns, and propose specific modifications to the criteria. Bidders shall submit such requests to the Contracting Agency no later than five (5) business days prior to the bid submittal deadline and address the request to the Project Engineer or such other person designated by the Contracting Agency in the Bid Documents.

AWARD AND EXECUTION OF CONTRACT

1-03.3 Execution of Contract

(October 1, 2005 APWA GSP)

Revise this section to read:

INFORMATIONAL COPY ONLY - NOT FOR BIDDING

Copies of the Contract Provisions, including the unsigned Form of Contract, will be available for signature by the successful bidder on the first business day following award. The number of copies to be executed by the Contractor will be determined by the Contracting Agency.

Within **10 (ten) calendar days** after the award date, the successful bidder shall return the signed Contracting Agency-prepared contract, an insurance certification as required by Section 1-07.18, and a satisfactory bond as required by law and Section 1-03.4. Before execution of the contract by the Contracting Agency, the successful bidder shall provide any pre-award information the Contracting Agency may require under Section 1-02.15.

Until the Contracting Agency executes a contract, no proposal shall bind the Contracting Agency nor shall any work begin within the project limits or within Contracting Agency-furnished sites. The Contractor shall bear all risks for any work begun outside such areas and for any materials ordered before the contract is executed by the Contracting Agency.

If the bidder experiences circumstances beyond their control that prevents return of the contract documents within the calendar days after the award date stated above, the Contracting Agency may grant up to a maximum of 5 (five) additional calendar days for return of the documents, provided the Contracting Agency deems the circumstances warrant it.

1-03.4 Contract Bond

(October 1, 2005 APWA GSP)

Revise the first paragraph to read:

The successful bidder shall provide an executed contract bond for the full contract amount. This contract bond shall:

1. Be on a Contracting Agency-furnished form;
2. Be signed by an approved surety (or sureties) that:
   a. Is registered with the Washington State Insurance Commissioner, and
   b. Appears on the current Authorized Insurance List in the State of Washington published by the Office of the Insurance Commissioner,
3. Be conditioned upon the faithful performance of the contract by the Contractor within the prescribed time;
4. Guarantee that the surety shall indemnify, defend, and protect the Contracting Agency against any claim of direct or indirect loss resulting from the failure:
   a. Of the Contractor (or any of the employees, subcontractors, or lower tier subcontractors of the Contractor) to faithfully perform the contract, or
   b. Of the Contractor (or the subcontractors or lower tier subcontractors of the Contractor) to pay all laborers, mechanics, subcontractors, lower tier subcontractors, materialperson, or any other person who provides supplies or provisions for carrying out the work;
5. Be accompanied by a power of attorney for the Surety's officer empowered to sign the bond; and
6. Be signed by an officer of the Contractor empowered to sign official statements (sole proprietor or partner). If the Contractor is a corporation, the bond must be signed by the president or vice-president, unless accompanied by written proof of the authority of the individual signing the bond to bind the corporation (i.e., corporate resolution, power of attorney or a letter to such effect by the president or vice-president).

INFORMATIONAL COPY ONLY - NOT FOR BIDDING

SCOPE OF WORK

1-04.2 Coordination of Contract Documents, Plans, Special Provisions, Specifications, and Addenda

(March 13, 2012 APWA GSP)

Revise the second paragraph to read:

Any inconsistency in the parts of the contract shall be resolved by following this order of precedence (e.g., 1 presiding over 2, 2 over 3, 3 over 4, and so forth):

1. Addenda,
2. Proposal Form,
3. Special Provisions,
4. Contract Plans,
5. Amendments to the Standard Specifications,
6. Standard Specifications,
7. Contracting Agency's Standard Plans or Details (if any), and
8. WSDOT Standard Plans for Road, Bridge, and Municipal Construction.

CONTROL OF WORK

1-05.7 Removal of Defective and Unauthorized Work

(October 1, 2005 APWA GSP)

Supplement this section with the following:

If the Contractor fails to remedy defective or unauthorized work within the time specified in a written notice from the Engineer, or fails to perform any part of the work required by the Contract Documents, the Engineer may correct and remedy such work as may be identified in the written notice, with Contracting Agency forces or by such other means as the Contracting Agency may deem necessary.

If the Contractor fails to comply with a written order to remedy what the Engineer determines to be an emergency situation, the Engineer may have the defective and unauthorized work corrected immediately, have the rejected work removed and replaced, or have work the Contractor refuses to perform completed by using Contracting Agency or other forces. An emergency situation is any situation when, in the opinion of the Engineer, a delay in its remedy could be potentially unsafe, or might cause serious risk of loss or damage to the public.

Direct or indirect costs incurred by the Contracting Agency attributable to correcting and remedying defective or unauthorized work, or work the Contractor failed or refused to perform, shall be paid by the Contractor. Payment will be deducted by the Engineer from monies due, or to become due, the Contractor. Such direct and indirect costs shall include in particular, but without limitation, compensation for additional professional services required, and costs for repair and replacement of work of others destroyed or damaged by correction, removal, or replacement of the Contractor's unauthorized work.

No adjustment in contract time or compensation will be allowed because of the delay in the performance of the work attributable to the exercise of the Contracting Agency's rights provided by this Section.

INFORMATIONAL COPY ONLY - NOT FOR BIDDING

The rights exercised under the provisions of this section shall not diminish the Contracting Agency's right to pursue any other avenue for additional remedy or damages with respect to the Contractor's failure to perform the work as required.

1-05.11 Final Inspection

Delete this section and replace it with the following:

1-05.11 Final Inspections and Operational Testing

(October 1, 2005 APWA GSP)

1-05.11(1) Substantial Completion Date

When the Contractor considers the work to be substantially complete, the Contractor shall so notify the Engineer and request the Engineer establish the Substantial Completion Date. The Contractor's request shall list the specific items of work that remain to be completed in order to reach physical completion. The Engineer will schedule an inspection of the work with the Contractor to determine the status of completion. The Engineer may also establish the Substantial Completion Date unilaterally.

If, after this inspection, the Engineer concurs with the Contractor that the work is substantially complete and ready for its intended use, the Engineer, by written notice to the Contractor, will set the Substantial Completion Date. If, after this inspection the Engineer does not consider the work substantially complete and ready for its intended use, the Engineer will, by written notice, so notify the Contractor giving the reasons therefor.

Upon receipt of written notice concurring in or denying substantial completion, whichever is applicable, the Contractor shall pursue vigorously, diligently and without unauthorized interruption, the work necessary to reach Substantial and Physical Completion. The Contractor shall provide the Engineer with a revised schedule indicating when the Contractor expects to reach substantial and physical completion of the work.

The above process shall be repeated until the Engineer establishes the Substantial Completion Date and the Contractor considers the work physically complete and ready for final inspection.

1-05.11(2) Final Inspection and Physical Completion Date

When the Contractor considers the work physically complete and ready for final inspection, the Contractor by written notice, shall request the Engineer to schedule a final inspection. The Engineer will set a date for final inspection. The Engineer and the Contractor will then make a final inspection and the Engineer will notify the Contractor in writing of all particulars in which the final inspection reveals the work incomplete or unacceptable. The Contractor shall immediately take such corrective measures as are necessary to remedy the listed deficiencies. Corrective work shall be pursued vigorously, diligently, and without interruption until physical completion of the listed deficiencies. This process will continue until the Engineer is satisfied the listed deficiencies have been corrected.

If action to correct the listed deficiencies is not initiated within 7 days after receipt of the written notice listing the deficiencies, the Engineer may, upon written notice to the Contractor, take whatever steps are necessary to correct those deficiencies pursuant to Section 1-05.7.

INFORMATIONAL COPY ONLY - NOT FOR BIDDING

The Contractor will not be allowed an extension of contract time because of a delay in the performance of the work attributable to the exercise of the Engineer's right hereunder.

Upon correction of all deficiencies, the Engineer will notify the Contractor and the Contracting Agency, in writing, of the date upon which the work was considered physically complete. That date shall constitute the Physical Completion Date of the contract, but shall not imply acceptance of the work or that all the obligations of the Contractor under the contract have been fulfilled.

1-05.11(3) Operational Testing

It is the intent of the Contracting Agency to have at the Physical Completion Date a complete and operable system. Therefore when the work involves the installation of machinery or other mechanical equipment; street lighting, electrical distribution or signal systems; irrigation systems; buildings; or other similar work it may be desirable for the Engineer to have the Contractor operate and test the work for a period of time after final inspection but prior to the physical completion date. Whenever items of work are listed in the Contract Provisions for operational testing they shall be fully tested under operating conditions for the time period specified to ensure their acceptability prior to the Physical Completion Date. During and following the test period, the Contractor shall correct any items of workmanship, materials, or equipment which prove faulty, or that are not in first class operating condition. Equipment, electrical controls, meters, or other devices and equipment to be tested during this period shall be tested under the observation of the Engineer, so that the Engineer may determine their suitability for the purpose for which they were installed. The Physical Completion Date cannot be established until testing and corrections have been completed to the satisfaction of the Engineer.

The costs for power, gas, labor, material, supplies, and everything else needed to successfully complete operational testing, shall be included in the unit contract prices related to the system being tested, unless specifically set forth otherwise in the proposal.

Operational and test periods, when required by the Engineer, shall not affect a manufacturer's guaranties or warranties furnished under the terms of the contract.

Superintendents, Labor and Equipment of Contractor

Revise the seventh paragraph of Section 1-05.13 to read:

(******)

Whenever the Contracting Agency evaluates the Contractor's <u>qualifications pursuant to Section 1-02.1</u> and 1-02.14, it will take these <u>performance</u> reports into account.

Cooperation With Other Contractors

Section 1-05.14 is supplemented with the following:

(March 13, 1995)

Other Contracts Or Other Work

It is anticipated that the following work adjacent to or within the limits of this project will be performed by others during the course of this project and will require coordination of the work:

INFORMATIONAL COPY ONLY - NOT FOR BIDDING

1. Utility relocations and/or normal maintenance work by telephone and power companies.
2. Normal maintenance work by Grant County Road crews.
3. Normal maintenance work by irrigation district crews.

1-05.15 Method of Serving Notices
(March 25, 2009 APWA GSP)

Revise the second paragraph to read:

All correspondence from the Contractor shall be directed to the Project Engineer. All correspondence from the Contractor constituting any notification, notice of protest, notice of dispute, or other correspondence constituting notification required to be furnished under the Contract, must be in paper format, hand delivered or sent via mail delivery service to the Project Engineer's office. Electronic copies such as e-mails or electronically delivered copies of correspondence will not constitute such notice and will not comply with the requirements of the Contract.

Add the following new section:

1-05.16 Water and Power
(October 1, 2005 APWA GSP)

The Contractor shall make necessary arrangements, and shall bear the costs for power and water necessary for the performance of the work, unless the contract includes power and water as a pay item.

1-05.17 Oral Agreements
(October 1, 2005 AWPA GSP)

No oral agreement or conversation with any officer, agent, or employee of the Contracting Agency, either before or after execution of the contract, shall affect or modify any of the terms or obligations contained in any of the documents comprising the contract. Such oral agreement or conversation shall be considered as unofficial information and in no way binding upon the Contracting Agency, unless subsequently put in writing and signed by the Contracting Agency.

CONTROL OF MATERIAL

Section 1-06 is supplemented with the following:

Buy America

(August 6, 2012)
In accordance with Buy America requirements contained in 23 CFR 635.410, the major quantities of steel and iron construction material that is permanently incorporated into the project shall consist of American-made materials only. Buy America does not apply to temporary steel items, e.g., temporary sheet piling, temporary bridges, steel scaffolding and falsework.

Minor amounts of foreign steel and iron may be utilized in this project provided the cost of the foreign material used does not exceed one-tenth of one percent of the total contract cost or $2,500.00, whichever is greater.

INFORMATIONAL COPY ONLY - NOT FOR BIDDING

American-made material is defined as material having all manufacturing processes occurring domestically. To further define the coverage, a domestic product is a manufactured steel material that was produced in one of the 50 States, the District of Columbia, Puerto Rico, or in the territories and possessions of the United States.

If domestically produced steel billets or iron ingots are exported outside of the area of coverage, as defined above, for any manufacturing process then the resulting product does not conform to the Buy America requirements. Additionally, products manufactured domestically from foreign source steel billets or iron ingots do not conform to the Buy America requirements because the initial melting and mixing of alloys to create the material occurred in a foreign country.

Manufacturing begins with the initial melting and mixing, and continues through the coating stage. Any process which modifies the chemical content, the physical size or shape, or the final finish is considered a manufacturing process. The processes include rolling, extruding, machining, bending, grinding, drilling, welding, and coating. The action of applying a coating to steel or iron is deemed a manufacturing process. Coating includes epoxy coating, galvanizing, aluminizing, painting, and any other coating that protects or enhances the value of steel or iron. Any process from the original reduction from ore to the finished product constitutes a manufacturing process for iron.

Due to a nationwide waiver, Buy America does not apply to raw materials (iron ore and alloys), scrap (recycled steel or iron), and pig iron or processed, pelletized, and reduced iron ore.

The following are considered to be steel manufacturing processes:

1. Production of steel by any of the following processes:

    a. Open hearth furnace.

    b. Basic oxygen.

    c. Electric furnace.

    d. Direct reduction.

2. Rolling, heat treating, and any other similar processing.

3. Fabrication of the products.06051.GR1 2

    a. Spinning wire into cable or strand.

    b. Corrugating and rolling into culverts.

    c. Shop fabrication.

A certification of materials origin will be required for any items comprised of, or containing, steel or iron construction materials prior to such items being incorporated into the permanent work. The certification shall be on DOT Form 350-109EF provided by the Engineer, or such other form the Contractor chooses, provided it contains the same information as DOT Form 350-109EF.

INFORMATIONAL COPY ONLY - NOT FOR BIDDING

LEGAL RELATIONS AND RESPONSIBILITIES TO THE PUBLIC

1-07.1 Laws to be Observed

(October 1, 2005 APWA GSP)

Supplement this section with the following:

In cases of conflict between different safety regulations, the more stringent regulation shall apply.

The Washington State Department of Labor and Industries shall be the sole and paramount administrative agency responsible for the administration of the provisions of the Washington Industrial Safety and Health Act of 1973 (WISHA).

The Contractor shall maintain at the project site office, or other well known place at the project site, all articles necessary for providing first aid to the injured. The Contractor shall establish, publish, and make known to all employees, procedures for ensuring immediate removal to a hospital, or doctor's care, persons, including employees, who may have been injured on the project site. Employees should not be permitted to work on the project site before the Contractor has established and made known procedures for removal of injured persons to a hospital or a doctor's care.

The Contractor shall have sole responsibility for the safety, efficiency, and adequacy of the Contractor's plant, appliances, and methods, and for any damage or injury resulting from their failure, or improper maintenance, use, or operation. The Contractor shall be solely and completely responsible for the conditions of the project site, including safety for all persons and property in the performance of the work. This requirement shall apply continuously, and not be limited to normal working hours. The required or implied duty of the Engineer to conduct construction review of the Contractor's performance does not, and shall not, be intended to include review and adequacy of the Contractor's safety measures in, on, or near the project site.

1-07.2 State Taxes

Delete this section, including its sub-sections, in its entirety and replace it with the following:

1-07.2 State Sales Tax

(June 27, 2011 APWA GSP)

The Washington State Department of Revenue has issued special rules on the State sales tax. Sections 1-07.2(1) through 1-07.2(3) are meant to clarify those rules. The Contractor should contact the Washington State Department of Revenue for answers to questions in this area. The Contracting Agency will not adjust its payment if the Contractor bases a bid on a misunderstood tax liability.

The Contractor shall include all Contractor-paid taxes in the unit bid prices or other contract amounts. In some cases, however, state retail sales tax will not be included. Section 1-07.2(2) describes this exception.

The Contracting Agency will pay the retained percentage (or release the Contract Bond if a FHWA-funded Project) only if the Contractor has obtained from the Washington State Department of Revenue a certificate showing that all contract-related taxes have been paid (RCW 60.28.051). The Contracting Agency may deduct from its payments to the Contractor

INFORMATIONAL COPY ONLY - NOT FOR BIDDING

any amount the Contractor may owe the Washington State Department of Revenue, whether the amount owed relates to this contract or not. Any amount so deducted will be paid into the proper State fund.

1-07.2(1) State Sales Tax — Rule 171

WAC 458-20-171, and its related rules, apply to building, repairing, or improving streets, roads, etc., which are owned by a municipal corporation, or political subdivision of the state, or by the United States, and which are used primarily for foot or vehicular traffic. This includes storm or combined sewer systems within and included as a part of the street or road drainage system and power lines when such are part of the roadway lighting system. For work performed in such cases, the Contractor shall include Washington State Retail Sales Taxes in the various unit bid item prices, or other contract amounts, including those that the Contractor pays on the purchase of the materials, equipment, or supplies used or consumed in doing the work.

1-07.2(2) State Sales Tax — Rule 170

WAC 458-20-170, and its related rules, apply to the constructing and repairing of new or existing buildings, or other structures, upon real property. This includes, but is not limited to, the construction of streets, roads, highways, etc., owned by the state of Washington; water mains and their appurtenances; sanitary sewers and sewage disposal systems unless such sewers and disposal systems are within, and a part of, a street or road drainage system; telephone, telegraph, electrical power distribution lines, or other conduits or lines in or above streets or roads, unless such power lines become a part of a street or road lighting system; and installing or attaching of any article of tangible personal property in or to real property, whether or not such personal property becomes a part of the realty by virtue of installation.

For work performed in such cases, the Contractor shall collect from the Contracting Agency, retail sales tax on the full contract price. The Contracting Agency will automatically add this sales tax to each payment to the Contractor. For this reason, the Contractor shall not include the retail sales tax in the unit bid item prices, or in any other contract amount subject to Rule 170, with the following exception.

Exception: The Contracting Agency will not add in sales tax for a payment the Contractor or a subcontractor makes on the purchase or rental of tools, machinery, equipment, or consumable supplies not integrated into the project. Such sales taxes shall be included in the unit bid item prices or in any other contract amount.

1-07.2(3) Services

The Contractor shall not collect retail sales tax from the Contracting Agency on any contract wholly for professional or other services (as defined in Washington State Department of Revenue Rules 138 and 244).

1-07.6 Permits and Licenses

Section 1-07.6 is supplemented with the following:

(******)
No hydraulic permits are required for this project unless the Contractor's operations use, divert, obstruct, or change the natural flow or bed of any river or

INFORMATIONAL COPY ONLY - NOT FOR BIDDING

stream, or utilize any of the waters of the State or materials from gravel or sand bars, or from stream beds.

1-07.7 Load Limits

Section 1-07.7 is supplemented with the following:

(March 13, 1995)
If the sources of materials provided by the Contractor necessitates hauling over roads other than State Highways, the Contractor shall, at the Contractor's expense, make all arrangements for the use of the haul routes.

1-07.9 Wages

General
Section 1-07.9(1) is supplemented with the following:

(January 3, 2014)
The Federal wage rates incorporated in this contract have been established by the Secretary of Labor under United States Department of Labor General Decision No. WA140001.

The State rates incorporated in this contract are applicable to all construction activities associated with this contract.

Requirements for Nondiscrimination

Section 1-07.11 is supplemented with the following:

(August 5, 2013)
Requirement for Affirmative Action to Ensure Equal Employment Opportunity (Executive Order 11246)

1. The Contractor's attention is called to the Equal Opportunity Clause and the Standard Federal Equal Employment Opportunity Construction Contract Specifications set forth herein.

2. The goals and timetables for minority and female participation set by the Office of Federal Contract Compliance Programs, expressed in percentage terms for the Contractor's aggregate work force in each construction craft and in each trade on all construction work in the covered area, are as follows:

Women - Statewide

Timetable	Goal
Until further notice	6.9%

Minorities - by Standard Metropolitan Statistical Area (SMSA)

INFORMATIONAL COPY ONLY - NOT FOR BIDDING

Spokane, WA:
SMSA Counties:
Spokane, WA 2.8
WA Spokane.
Non-SMSA Counties 3.0
WA Adams; WA Asotin; WA Columbia; WA Ferry; WA Garfield; WA Lincoln, WA Pend Oreille; WA Stevens; WA Whitman.

Richland, WA
SMSA Counties:
Richland Kennewick, WA 5.4
WA Benton; WA Franklin.
Non-SMSA Counties 3.6
WA Walla Walla.

Yakima, WA:
SMSA Counties:
Yakima, WA 9.7
WA Yakima.
Non-SMSA Counties 7.2
WA Chelan; WA Douglas; WA Grant; WA Kittitas; WA Okanogan.

Seattle, WA:
SMSA Counties:
Seattle Everett, WA 7.2
WA King; WA Snohomish.
Tacoma, WA 6.2
WA Pierce.
Non-SMSA Counties 6.1
WA Clallam; WA Grays Harbor; WA Island; WA Jefferson; WA Kitsap; WA Lewis; WA Mason; WA Pacific; WA San Juan; WA Skagit; WA Thurston; WA Whatcom.

Portland, OR:
SMSA Counties:
Portland, OR-WA 4.5
WA Clark.
Non-SMSA Counties 3.8
WA Cowlitz; WA Klickitat; WA Skamania; WA Wahkiakum.

These goals are applicable to each nonexempt Contractor's total on-site construction workforce, regardless of whether or not part of that workforce is performing work on a Federal, or federally assisted project, contract, or subcontract until further notice. Compliance with these goals and time tables is enforced by the Office of Federal Contract compliance Programs.

The Contractor's compliance with the Executive Order and the regulations in 41 CFR Part 60-4 shall be based on its implementation of the Equal Opportunity Clause, specific affirmative action obligations required by the specifications set forth in 41 CFR 60-4.3(a), and its efforts to meet the goals. The hours of minority and female employment and training must be substantially uniform throughout the length of the contract, in each construction craft and in each trade, and the Contractor shall make a good faith effort to employ minorities and women evenly on each of its projects. The transfer of minority or female employees or trainees from Contractor to Contractor or

INFORMATIONAL COPY ONLY - NOT FOR BIDDING

from project to project for the sole purpose of meeting the Contractor's goal shall be a violation of the contract, the Executive Order and the regulations in 41 CFR Part 60-4. Compliance with the goals will be measured against the total work hours performed.

3. The Contractor shall provide written notification to the Office of Federal Contract Compliance Programs (OFCCP) within 10 working days of award of any construction subcontract in excess of $10,000 or more that are Federally funded, at any tier for construction work under the contract resulting from this solicitation. The notification shall list the name, address and telephone number of the Subcontractor; employer identification number of the Subcontractor; estimated dollar amount of the subcontract; estimated starting and completion dates of the subcontract; and the geographical area in which the contract is to be performed. The notification shall be sent to:

   U.S. Department of Labor
   Office of Federal Contract Compliance Programs Pacific Region
   Attn: Regional Director
   San Francisco Federal Building
   90 – 7th Street, Suite 18-300
   San Francisco, CA 94103(415) 625-7800 Phone
   (415) 625-7799 Fax

   Additional information may be found at the U.S. Department of Labor website: http://www.dol.gov/ofccp/TAguides/ctaguide.htm

4. As used in this Notice, and in the contract resulting from this solicitation, the Covered Area is as designated herein.

Standard Federal Equal Employment Opportunity Construction Contract Specifications (Executive Order 11246)

1. As used in these specifications:

   a. Covered Area means the geographical area described in the solicitation from which this contract resulted;

   b. Director means Director, Office of Federal Contract Compliance Programs, United States Department of Labor, or any person to whom the Director delegates authority;

   c. Employer Identification Number means the Federal Social Security number used on the Employer's Quarterly Federal Tax Return, U. S. Treasury Department Form 941;

   d. Minority includes:

      (1) Black, a person having origins in any of the Black Racial Groups of Africa.

      (2) Hispanic, a fluent Spanish speaking, Spanish surnamed person of Mexican, Puerto Rican, Cuban, Central American, South American, or other Spanish origin.

INFORMATIONAL COPY ONLY - NOT FOR BIDDING

(3) Asian or Pacific Islander, a person having origins in any of the original peoples of the Pacific rim or the Pacific Islands, the Hawaiian Islands and Samoa.

(4) American Indian or Alaskan Native, a person having origins in any of the original peoples of North America, and who maintain cultural identification through tribal affiliation or community recognition.

2. Whenever the Contractor, or any Subcontractor at any tier, subcontracts a portion of the work involving any construction trade, it shall physically include in each subcontract in excess of $10,000 the provisions of these specifications and the Notice which contains the applicable goals for minority and female participation and which is set forth in the solicitations from which this contract resulted.

3. If the Contractor is participating (pursuant to 41 CFR 60-4.5) in a Hometown Plan approved by the U.S. Department of Labor in the covered area either individually or through an association, its affirmative action obligations on all work in the Plan area (including goals and timetables) shall be in accordance with that Plan for those trades which have unions participating in the Plan. Contractors must be able to demonstrate their participation in and compliance with the provisions of any such Hometown Plan. Each Contractor or Subcontractor participating in an approved Plan is individually required to comply with its obligations under the EEO clause, and to make a good faith effort to achieve each goal under the Plan in each trade in which it has employees. The overall good faith performance by other Contractors or Subcontractors toward a goal in an approved Plan does not excuse any covered Contractor's or Subcontractor's failure to take good faith effort to achieve the Plan goals and timetables.

4. The Contractor shall implement the specific affirmative action standards provided in paragraphs 7a through 7p of this Special Provision. The goals set forth in the solicitation from which this contract resulted are expressed as percentages of the total hours of employment and training of minority and female utilization the Contractor should reasonably be able to achieve in each construction trade in which it has employees in the covered area. Covered construction contractors performing construction work in geographical areas where they do not have a Federal or federally assisted construction contract shall apply the minority and female goals established for the geographical area where the work is being performed. The Contractor is expected to make substantially uniform progress in meeting its goals in each craft during the period specified.

5. Neither the provisions of any collective bargaining agreement, nor the failure by a union with whom the Contractor has a collective bargaining agreement, to refer either minorities or women shall excuse the Contractor's obligations under these specifications, Executive Order 11246, or the regulations promulgated pursuant thereto.

6. In order for the nonworking training hours of apprentices and trainees to be counted in meeting the goals, such apprentices and trainees must be employed by the Contractor during the training period, and the Contractor must have made a commitment to employ the apprentices and trainees at the completion of their training, subject to the availability of employment opportunities. Trainees must be trained pursuant to training programs approved by the U.S. Department of Labor.

7. The Contractor shall take specific affirmative actions to ensure equal employment opportunity. The evaluation of the Contractor's compliance with these specifications

INFORMATIONAL COPY ONLY - NOT FOR BIDDING

shall be based upon its effort to achieve maximum results from its action. The Contractor shall document these efforts fully, and shall implement affirmative action steps at least as extensive as the following:

a. Ensure and maintain a working environment free of harassment, intimidation, and coercion at all sites, and in all facilities at which the Contractor's employees are assigned to work. The Contractor, where possible, will assign two or more women to each construction project. The Contractor shall specifically ensure that all foremen, superintendents, and other on-site supervisory personnel are aware of and carry out the Contractor's obligation to maintain such a working environment, with specific attention to minority or female individuals working at such sites or in such facilities.

b. Establish and maintain a current list of minority and female recruitment sources, provide written notification to minority and female recruitment sources and to community organizations when the Contractor or its unions have employment opportunities available, and maintain a record of the organizations' responses.

c. Maintain a current file of the names, addresses and telephone numbers of each minority and female off-the-street applicant and minority or female referral from a union, a recruitment source or community organization and of what action was taken with respect to each such individual. If such individual was sent to the union hiring hall for referral and was not referred back to the Contractor by the union or, if referred, not employed by the Contractor, this shall be documented in the file with the reason therefor, along with whatever additional actions the Contractor may have taken.

d. Provide immediate written notification to the Director when the union or unions with which the Contractor has a collective bargaining agreement has not referred to the Contractor a minority person or woman sent by the Contractor, or when the Contractor has other information that the union referral process has impeded the Contractor's efforts to meet its obligations.

e. Develop on-the-job training opportunity and/or participate in training programs for the area which expressly include minorities and women, including upgrading programs and apprenticeship and trainee programs relevant to the Contractor's employment needs, especially those programs funded or approved by the U.S. Department of Labor. The Contractor shall provide notice of these programs to the sources compiled under 7b above.

f. Disseminate the Contractor's EEO policy by providing notice of the policy to unions and training programs and requesting their cooperation in assisting the Contractor in meeting its EEO obligations; by including it in any policy manual and collective bargaining agreement; by publicizing it in the company newspaper, annual report, etc.; by specific review of the policy with all management personnel and with all minority and female employees at least once a year; and by posting the company EEO policy on bulletin boards accessible to all employees at each location where construction work is performed.

g. Review, at least annually, the company's EEO policy and affirmative action obligations under these specifications with all employees having any responsibility for hiring, assignment, layoff, termination or other employment

INFORMATIONAL COPY ONLY - NOT FOR BIDDING

decisions including specific review of these items with on-site supervisory personnel such as Superintendents, General Foremen, etc., prior to the initiation of construction work at any job site. A written record shall be made and maintained identifying the time and place of these meetings, persons attending, subject matter discussed, and disposition of the subject matter.

h. Disseminate the Contractor's EEO policy externally by including it in any advertising in the news media, specifically including minority and female news media, and providing written notification to and discussing the Contractor's EEO policy with other Contractors and Subcontractors with whom the Contractor does or anticipates doing business.

i. Direct its recruitment efforts, both oral and written to minority, female and community organizations, to schools with minority and female students and to minority and female recruitment and training organizations serving the Contractor's recruitment area and employment needs. Not later than one month prior to the date for the acceptance of applications for apprenticeship or other training by any recruitment source, the Contractor shall send written notification to organizations such as the above, describing the openings, screening procedures, and tests to be used in the selection process.

j. Encourage present minority and female employees to recruit other minority persons and women and where reasonable, provide after school, summer and vacation employment to minority and female youth both on the site and in other areas of a Contractor's work force.

k. Validate all tests and other selection requirements where there is an obligation to do so under 41 CFR Part 60-3.

l. Conduct, at least annually, an inventory and evaluation of all minority and female personnel for promotional opportunities and encourage these employees to seek or to prepare for, through appropriate training, etc., such opportunities.

m. Ensure that seniority practices, job classifications, work assignments and other personnel practices, do not have a discriminatory effect by continually monitoring all personnel and employment related activities to ensure that the EEO policy and the Contractor's obligations under these specifications are being carried out.

n. Ensure that all facilities and company activities are nonsegregated except that separate or single-user toilet and necessary changing facilities shall be provided to assure privacy between the sexes.

o. Document and maintain a record of all solicitations of offers for subcontracts from minority and female construction contractors and suppliers, including circulation of solicitations to minority and female contractor associations and other business associations.

p. Conduct a review, at least annually, of all supervisors' adherence to and performance under the Contractor's EEO policies and affirmative action obligations.

INFORMATIONAL COPY ONLY - NOT FOR BIDDING

8. Contractors are encouraged to participate in voluntary associations which assist in fulfilling one or more of their affirmative action obligations (7a through 7p). The efforts of a contractor association, joint contractor-union, contractor-community, or other similar group of which the Contractor is a member and participant, may be asserted as fulfilling any one or more of the obligations under 7a through 7p of this Special Provision provided that the Contractor actively participates in the group, makes every effort to assure that the group has a positive impact on the employment of minorities and women in the industry, ensure that the concrete benefits of the program are reflected in the Contractor's minority and female work-force participation, makes a good faith effort to meet its individual goals and timetables, and can provide access to documentation which demonstrate the effectiveness of actions taken on behalf of the Contractor. The obligation to comply, however, is the Contractor's and failure of such a group to fulfill an obligation shall not be a defense for the Contractor's noncompliance.

9. A single goal for minorities and a separate single goal for women have been established. The Contractor, however, is required to provide equal employment opportunity and to take affirmative action for all minority groups, both male and female, and all women, both minority and non-minority. Consequently, the Contractor may be in violation of the Executive Order if a particular group is employed in substantially disparate manner (for example, even though the Contractor has achieved its goals for women generally, the Contractor may be in violation of the Executive Order if a specific minority group of women is underutilized).

10. The Contractor shall not use the goals and timetables or affirmative action standards to discriminate against any person because of race, color, religion, sex, or national origin.

11. The Contractor shall not enter into any subcontract with any person or firm debarred from Government contracts pursuant to Executive Order 11246.

12. The Contractor shall carry out such sanctions and penalties for violation of these specifications and of the Equal Opportunity Clause, including suspensions, terminations and cancellations of existing subcontracts as may be imposed or ordered pursuant to Executive Order 11246, as amended, and its implementing regulations by the Office of Federal Contract Compliance Programs. Any Contractor who fails to carry out such sanctions and penalties shall be in violation of these specifications and Executive Order 11246, as amended.

13. The Contractor, in fulfilling its obligations under these specifications, shall implement specific affirmative action steps, at least as extensive as those standards prescribed in paragraph 7 of this Special Provision, so as to achieve maximum results from its efforts to ensure equal employment opportunity. If the Contractor fails to comply with the requirements of the Executive Order, the implementing regulations, or these specifications, the Director shall proceed in accordance with 41 CFR 60-4.8.

14. The Contractor shall designate a responsible official to monitor all employment related activity to ensure that the company EEO policy is being carried out, to submit reports relating to the provisions hereof as may be required by the government and to keep records. Records shall at least include, for each employee, their name, address, telephone numbers, construction trade, union affiliation if any, employee identification number when assigned, social security number, race, sex, status (e.g., mechanic, apprentice, trainee, helper, or laborer), dates of changes in status, hours worked per week in the indicated trade, rate of pay, and locations at which the work was performed. Records shall be maintained in an easily understandable and retrievable

INFORMATIONAL COPY ONLY - NOT FOR BIDDING

form; however, to the degree that existing records satisfy this requirement, the Contractors will not be required to maintain separate records.

15. Nothing herein provided shall be construed as a limitation upon the application of other laws which establish different standards of compliance or upon the application of requirements for the hiring of local or other area residents (e.g., those under the Public Works Employment Act of 1977 and the Community Development Block Grant Program).

16. Additional assistance for Federal Construction Contractors on contracts administered by Washington State Department of Transportation or by Local Agencies may be found at:

    Washington State Dept. of Transportation
    Office of Equal Opportunity
    PO Box 47314
    310 Maple Park Ave. SE
    Olympia WA
    98504-7314
    Ph: 360-705-7090
    Fax: 360-705-6801
    http://www.wsdot.wa.gov/equalopportunity/default.htm

(April 1, 2013)
Disadvantaged Business Enterprise Condition of Award Participation
The Disadvantaged Business Enterprise (DBE) requirements of 49 CFR Part 26 apply to this Contract. Demonstrating compliance with these specifications is a Condition of Award (COA) of this Contract. Failure to comply with the requirements of this specification may result in your bid being found to be nonresponsive and may be rejected.

DBE COA Goal
The Contracting Agency has established a COA Contract goal in the amount of: *** **3 percent (3%) of the contract total for COA DBE goals** ***.

DBE Eligibility/Selection of DBEs
A Directory of Certified DBE Firms denoting the Description of Work the DBE Contractors are certified to perform is available at:

www.omwbe.wa.gov/certification/index.shtml.

The directory provides plain language on the Description of Work that the listed DBE's have been certified by the Office of Minority and Women's Business Enterprises (OMWBE) to perform. The Bidder shall use the Directory of Certified DBE Firms to confirm if a DBE is certified for the "Description of Work" the Bidder lists on the DBE Utilization Certification form # 272-056 EF (see form instructions) and therefore qualifies for credit towards the COA goal.

Crediting DBE Participation
Joint Venture
When a DBE performs as a participant in a joint venture, only that portion of the total dollar value of the Contract equal to the distinct, clearly defined portion of the Work that the DBE performs with its own forces shall be credited.

INFORMATIONAL COPY ONLY - NOT FOR BIDDING

DBE Prime Contractor
A DBE Prime Contractor may only take credit for that portion of the total dollar value of the Contract equal to the distinct, clearly defined portion of the Work that the DBE Prime performs with its own forces.

DBE Subcontractor
When a DBE firm participates as a Subcontractor only that portion of the total dollar value of the Contract equal to the distinct, clearly defined portion of the Work that the DBE performs with its own forces shall be credited.

- Include the cost of supplies and materials obtained by the DBE for the Work in the Contract including supplies purchased or equipment leased by the DBE.
    - However, you may not take credit for supplies, materials, and equipment the DBE Subcontractor purchases or leases from the Prime Contractor or its affiliate. In addition, Work performed by a DBE, utilizing resources of the Prime Contractor or its affiliates shall not be credited.
- In very rare situations, a DBE firm may utilize equipment and/or personnel from a non-DBE firm other than the Prime Contractor or its affiliates. Should this situation arise the arrangement must be short-term and have prior written approval from the Office of Equal Opportunity (OEO).
- Count the entire value of fees or commissions charged by a DBE firm for providing a bona fide service, such as professional, technical, consultant, managerial services, or for providing bonds or insurance.
- When a DBE subcontracts to another firm, the value of the subcontracted Work may be counted as participation only if the DBE's lower tier Subcontractor is also a DBE. Work that a DBE subcontracts to a non-DBE firm shall not be credited.
- When non-DBE Subcontractor further subcontracts to a lower-tier Subcontractor or supplier who is a certified DBE, then that portion of the Work further subcontracted may be credited as DBE participation, provided it is a distinct clearly defined portion of the Work that the DBE is certified to perform and the DBE Subcontractor performs the Work with its own forces.
- If a firm is not certified as a DBE at the time of the execution of the contract, their participation cannot be counted toward any DBE goals.

Trucking
Use the following factors in determining DBE credit and whether a DBE trucking company is performing a commercially useful function:

1. The DBE must be responsible for the management and supervision of the entire trucking operation for which credit is being claimed.
2. The DBE must itself own and, with its own workforce, operate at least one fully licensed, insured, and operational truck used on the Contract.

INFORMATIONAL COPY ONLY - NOT FOR BIDDING

3. The DBE receives credit only for the value of the transportation services it provides on the Contract using trucks it owns or leases, licenses, insures, and operates with drivers it employs. For purposes of this requirement a lease must indicate that the DBE has exclusive use of and control over the truck. This does not preclude the leased truck from working for others provided it is with the consent of the DBE and the lease provides the DBE first priority for use of the leased truck. Leased trucks must display the name and identification number of the DBE.

4. The DBE may lease trucks from another DBE firm including an owner-operator provided they are certified as a DBE for trucking. The DBE who leases trucks from another DBE may claim participation for the total value of the transportation services the lessee DBE provides on the Contract.

5. The DBE may also lease trucks from a non-DBE firm and may enter into an agreement with an owner-operator who is a non-DBE. The DBE shall only receive credit for the number of additional non-DBE trucks equal or less than the number of DBE trucks the firms owns or has leased/subcontracted through another DBE trucking company. The DBE must control the work of the non-DBE trucks. If the non-DBE is performing the work without supervision of that work by the DBE, the DBE is not performing a Commercially Useful Function (CUF).

6. In any lease or owner-operator situation, as described in requirement #4 and #5 above, the following rules shall apply:

   a. A written lease/rental agreement is required for all trucks leased or rented; documenting the ownership and the terms of the agreement. The agreements must be submitted and approved by the Contracting Agency prior to the beginning of the Work. The agreement must show the leaser's name, truck description and agreed upon amount and method of payment (hour, ton, or per load). All lease agreements shall be for a long-term relationship, rather than for the individual project. (This requirement does not apply to owner-operator arrangements.)

   b. Only the vehicle, (not the operator) may be leased or rented. (This requirement does not apply to owner-operator arrangements).

7. Credit may only be claimed for DBE trucking firms operating under a subcontract or a written agreement approved by the Contracting Agency prior to performing Work.

Expenditures paid to other DBEs

Expenditures paid to other DBEs for materials or supplies may be counted toward DBE goals as provided in the following:

Manufacturer

You may claim DBE credit for 100 percent of value of the materials or supplies obtained from a DBE manufacturer.

INFORMATIONAL COPY ONLY - NOT FOR BIDDING

A manufacturer is a firm that operates or maintains a factory or establishment that produces, on the premises, the materials, supplies, articles, or equipment required under the contract. A manufacturer shall include firms that produce finished goods or products from raw or unfinished material or that purchases and substantially alters goods and materials to make them suitable for construction use before reselling them.

In order to receive credit as a DBE Manufacturer, the firm must be certified by OMWBE as a manufacturer in a NAICS code that falls within the 31XXXX to 33XXXX classification.

Regular Dealer

You may claim credit for 60 percent of the value of the materials or supplies purchased from a DBE regular dealer. Rules applicable to regular dealer status are contained in 49 CFR Part 26.55.e.2.

To be considered a regular dealer you must meet the following criteria:

- WSDOT considers and recognizes a regular dealer, as a firm that owns, operates, or maintains a store, warehouse, or other establishment in which the materials or supplies required for the performance of the Contract and described by the specifications of the Contract are bought, kept in stock and regularly sold or leased to the public in the usual course of business.

- Sixty percent (60%) of the cost of materials or supplies purchased from an approved regular dealer may be credited as DBE participation.

Regular dealer status is granted on a contract-by-contract basis. A firm wishing to be approved as a regular dealer for WSDOT contracted projects or Highways & Local Program administered projects must submit a request in writing to OEO for approval, no later than seven days prior to bid opening.

Once the OEO has received the request, an onsite review will be set up with the firm and a review conducted to determine the firm's qualifications. If it is determined that the firm qualifies as a regular dealer the OEO will list the firm on an Approved Regular Dealers List. The list may be accessed through the OEO Home website is at:

www.wsdot.wa.gov/equalopportunity.

Note: Requests to be listed as a regular dealer will only be processed if the requesting firm is certified by the Office of Minority and Women's Business Enterprises in a NAICS code that fall within the 42XXXX NAICS Wholesale code section.

Materials or Supplies Purchased from a DBE

With regard to materials or supplies purchased from a DBE who is neither a manufacturer nor a regular dealer you may claim credit for the following:

1. Fees or commissions charged for assistance in the procurement of the materials and supplies.

INFORMATIONAL COPY ONLY - NOT FOR BIDDING

2. Fees or transportation charges for the delivery of materials or supplies.

In either case you may not take credit for any part of the cost of the materials and supplies.

Commercially Useful Function (CUF)

The Prime Contractor has a responsibility and must treat the working relationship with the DBE such that the DBE is performing a commercially useful function. The Prime Contractor may only take credit for Work performed by a DBE that is determined to be performing a commercially useful function.

- A DBE performs a commercially useful function when it is responsible for execution of a distinct element of Work and is carrying out its responsibilities by performing, managing and supervising the Work involved. The DBE must also be responsible with respect to materials and supplies used on the Contract. For example; negotiating price, determining quality, determining quantities, ordering, installing (if applicable) and paying for the material itself.

- A DBE does not perform a commercially useful function if its role is limited to that of an extra participant in a transaction, Contract, or project through which funds are passed.

Joint Checking Allowance

Prime Contractors and DBEs must receive pre-approval by the OEO before using a joint check. Joint check requests shall be submitted by the Prime Contractor to the Contracting Agency for approval.

When requesting approval for use of a joint checking allowance, the Contractor must distribute a written joint check agreement among the parties (including the suppliers involved) providing full and prompt disclosure of the expected use of the joint checks. The agreement shall contain all the information concerning the parties' obligations and consequences or remedies if the agreement is not fulfilled or a breach occurs. The joint check request shall be submitted to the Contracting Agency for approval prior to signing the contract agreement.

The following are some general conditions that must be met by all parties regarding joint check use:

a. It is understood that the Prime Contractor acts solely as the guarantor of a joint check.

b. The DBE's own funds are used to pay supplier of materials. The Prime Contractor does not make direct payment to supplier. In order to be performing a Commercially Useful Function (CUF), the DBE must release the check to the supplier (paying for the materials it-self and not be an extra participant in a transaction).

c. If the Prime Contractor makes joint checks available to one DBE Subcontractor, the service must be made available to all Subcontractors (DBE and non-DBE).

INFORMATIONAL COPY ONLY - NOT FOR BIDDING

d. The relationship between the DBE and its suppliers should be established independently of and without interference by the Prime Contractor. The DBE has final decision-making responsibility concerning the procurement of materials and supplies, including which supplier to use.

e. The Prime Contractor and DBE shall be able to provide receipts, invoices, cancelled checks and/or certification statements of payment if requested by the Contracting Agency.

f. The DBE remains responsible for all other elements of 49 CFR 26.55(c)(1).

Failure by the Prime Contractor to request and receive prior approval of a joint check arrangement will result in the joint check amount not counting towards the Prime Contractor's DBE goal.

Disadvantaged Business Enterprise Utilization Certification FORM # 272-056 EF

To be eligible for award of the Contract, the Bidder shall properly complete and submit a Disadvantaged Business Enterprise Utilization Certification with the Bidder's sealed Bid Proposal, as specified Section 1-02.9 Delivery of Proposal. The Bidder's Disadvantaged Business Enterprise Utilization Certification must clearly demonstrate how the Bidder intends to meet the DBE COA goal. A Disadvantaged Business Enterprise Utilization Certification (form # 272-056 EF) is included in your Proposal package for this purpose as well as instructions on how to properly fill out the form.

In the event of arithmetic errors in completing the Disadvantaged Business Enterprise Utilization Certification the amount listed to be applied towards the goal for each DBE shall govern and the DBE total amount shall be adjusted accordingly.

Note: The Contracting Agency shall consider as non-responsive and shall reject any Bid Proposal submitted that does not contain a Disadvantaged Business Enterprise Utilization Certification that accurately demonstrates how the Bidder intends to meet the COA goal.

Disadvantaged Business Enterprise (DBE) Written Confirmation Document(s) FORM # 422-031 EF

The Bidder shall submit a complete and accurate Disadvantaged Business Enterprise (DBE) Written Confirmation Document for each DBE firm listed in the Bidder's completed Disadvantaged Business Enterprise Utilization Certification as submitted with the bid. Failure to do so will result in the associated participation being disallowed, which may result in bid rejection.

A Disadvantaged Business Enterprise (DBE) Written Confirmation Document (form No. 422-031 EF) is included in your Proposal package for this purpose.

The form(s) shall be received as specified in the special provisions for Section 1-02.9 Delivery of Proposal.

It is prohibited for the Bidder to require a DBE to submit a Written Confirmation Document with any part of the form left blank. Should the Contracting Agency determine that a Written Confirmation Document was signed by a DBE that was

INFORMATIONAL COPY ONLY - NOT FOR BIDDING

not complete; the validity of the document comes into question and the associated DBE Participation may not receive credit.

Selection of Successful Bidder/Good Faith Efforts (GFE)

The successful Bidder shall be selected on the basis of having submitted the lowest responsive Bid, which demonstrates a good faith effort to achieve the DBE COA goal. Achieving the goal may be accomplished in one of two ways, as follows:

1. By meeting the goal
   The best indication of good faith efforts is to document, through submission of the Disadvantaged Business Enterprise Utilization Certification and supporting Disadvantaged Business Enterprise (DBE) Written Confirmation Document(s) that the Bidder has obtained enough DBE participation to meet or exceed the assigned DBE COA contract goal. That being the case no additional GFE documentation is required. Or;

2. By documentation that it made adequate GFE to meet the goal
   The Bidder may demonstrate a GFE in whole or part through GFE documentation ONLY IN THE EVENT a Bidder's efforts to solicit sufficient DBE participation have been unsuccessful. In this case, the Bidder must supply GFE documentation in addition to the Disadvantaged Business Enterprise Utilization Certification, and supporting Disadvantaged Business Enterprise (DBE) Written Confirmation document(s).

Note: In the case where the Bidder was awarded the contract based on demonstrating adequate GFE the advertised DBE goal will not be reduced to the Bidder's partial commitment. The Bidder shall demonstrate a GFE during the life of the Contract to attain the DBE Condition of Award (COA) Goal as assigned to the project.

Good Faith Efforts (GFE) Documentation

GFE documentation shall be received, as specified in the special provisions for Section 1-02.9 Delivery of Proposal.

Based upon all the relevant documentation submitted in Bid or as supplement to Bid, the Contracting Agency shall determine whether the Bidder has demonstrated a sufficient GFE to achieve DBE participation. The Contracting Agency will make a fair and reasonable judgment of whether a Bidder that did not meet the goal through participation, made adequate good faith efforts as demonstrated by the GFE documentation.

The following is a list of types of actions, which would be considered as part of the Bidder's GFE to achieve DBE participation. It is not intended to be a mandatory checklist, nor is it intended to be exclusive or exhaustive. Other factors or types of efforts may be relevant in appropriate cases:

1. Attendance by the Bidder at any pre-solicitation or pre-Bid meetings that were scheduled by the Contracting Agency to inform DBEs of contracting and subcontracting or material supply opportunities available on the project;

INFORMATIONAL COPY ONLY - NOT FOR BIDDING

2. Contacting local Tribes, Tribal Employment Rights Offices (TERO) concerning the subcontracting or supply opportunities in sufficient time to allow the enterprises to participate effectively;

3. Selection by the Bidder of specific economically feasible units of the project to be performed by DBEs in order to increase the likelihood of participation by DBEs even if the Bidder preferred to perform these Work items as the Prime Contractor;

4. Advertising by the Bidder in general circulation, trade association minority and trade oriented, women focus publications, concerning the subcontracting or supply opportunities;

5. Providing written notice from the Bidder to a reasonable number of specific DBEs, identified from the OMWBE Directory of Certified DBE Firms for the selected subcontracting or material supply Work, in sufficient time to allow the enterprises to participate effectively;

6. Follow-up by the Bidder of initial solicitations of interest by contacting the DBEs to determine with certainty whether they were interested. Documentation of this kind of action shall include the information outlined below:

   a. The names, addresses, telephone numbers of DBEs who were contacted, the dates of initial contact, and whether initial solicitations of interest were followed-up by contacting the DBEs to determine with certainty whether the DBEs were interested;

   b. A description of the information provided to the DBEs regarding the plans, specifications, and estimated quantities for portions of the Work to be performed;

   c. Documentation of each DBE contacted but rejected and the reason(s) for that rejection;

7. Providing, to interested DBEs, adequate information about the plans, specifications, and requirements for the selected subcontracting or material supply Work;

8. Negotiating in good faith with the DBE firms, and not, without justifiable reason, rejecting as unsatisfactory, Bids that are prepared by any DBE. The DBE's standing within its industry, membership in specific groups, organizations, or associations and political or social affiliations - union vs. non-union employee status - are not legitimate causes for the rejection or non-solicitation of bids in the Prime Contractor's efforts to meet the project goal;

9. Advertising and making efforts to obtain DBE participation that were reasonably expected to produce a level of participation sufficient to meet the goal or requirements of the Contracting Agency;

10. Making any other efforts to obtain DBE participation that were reasonably expected to produce a level of participation sufficient to meet the goal or requirements of the Contracting Agency;

INFORMATIONAL COPY ONLY - NOT FOR BIDDING

11. Using the services of minority community organizations, minority contractor groups, local, State, and federal minority business assistance offices and other organizations identified by WSDOT and advocates for disadvantaged, minority, and women businesses that provide assistance in the recruitment and placement of disadvantaged, minority, and women business enterprises; and

12. Using the WSDOT OEO DBE Supportive Services to assist you. For more information please contact the OEO by calling toll free at (888) 259-9143 or emailing dbess@wsdot.wa.gov.

Administrative Reconsideration of GFE Documentation

Any Bidder has the right to reconsideration but only for the purpose of reassessing their GFE documentation that was determined to be inadequate.

- The Bidder must request and schedule a reconsideration hearing within seven calendar days of notification of being nonresponsive or forfeit the right to reconsideration.

- The reconsideration decision on the adequacy of the Bidder's GFE documentation shall be made by an official who did not take part in the original determination.

- The Bidder shall have the opportunity to meet in person with the official for the purpose of setting forth the Bidder's position as to why the GFE documentation demonstrates a sufficient effort.

- The reconsideration official shall provide the Bidder with a written decision on reconsideration within five business days of the hearing explaining the basis for their finding.

Procedures between Award and Execution

After Award and prior to Execution the Bidder shall provide the additional information described below. Failure to comply shall result in the forfeiture of the Bidder's Proposal bond or deposit.

1. Additional information for all successful DBE's as shown on the Disadvantaged Business Enterprise Utilization Certification:

   a. Correct business name, federal employee identification number (if available), and mailing address.

   b. List of all Bid items assigned to each successful DBE firm, including unit prices and extensions.

   c. Description of partial items (if any) to be sublet to each successful DBE firm specifying the distinct elements of Work under each item to be performed by the DBE and including the dollar value of the DBE portion.

   Total amounts shown for each DBE shall not be less than the amount shown on the Disadvantaged Business Enterprise Utilization Certification. A breakdown that does not conform to the

INFORMATIONAL COPY ONLY - NOT FOR BIDDING

Disadvantaged Business Enterprise Utilization Certification or that demonstrates a lesser amount of DBE participation than that included in the Disadvantaged Business Enterprise Utilization Certification will be returned for correction.

2. A list of all firms who submitted a Bid or quote in an attempt to participate in this project whether they were successful or not. Include the business name and a mailing address.

Note: The firms identified by the Prime Contractor may be contacted by the Contracting Agency to solicit general information as follows: age of the firm and average of its gross annual receipts over the past three-years.

Procedures after Execution

Crediting DBE Participation toward Meeting the Goal

Reporting

All DBE work whether COA or race neutral participation is reported. The Prime Contractor shall submit a Quarterly Report of Amounts Credited as DBE Participation form (422-102 EF) on a quarterly basis for any calendar quarter in which DBE has accomplished Work or upon completion of the project, as appropriate. The dollars are to be reported as specified herein.

In the event that the payments to a DBE have been made by an entity other than the Prime Contractor, as in the case of a lower-tier Subcontractor or supplier, then the Prime Contractor shall obtain the quarterly report, including the signed affidavit, from the paying entity and submit the report to the Contracting Agency.

Changes in DBE COA participation

Owner initiated Change Orders

The Prime Contractor shall demonstrate a GFE to substitute COA DBE participation when the Contracting Agency deletes Work items by change order that impact a COA DBE's Work.

When the Contract allows alternate Work methods which serve to delete or create under-runs in COA DBE Work then the Prime Contractor must provide documentation of negotiating the change with the DBE that was to perform the reduced Work and demonstrate a GFE to substitute other DBE COA participation.

Original Quantity Under runs

In the event that Work committed to a DBE firm as part of the COA under runs the original planned quantities the Prime Contractor shall demonstrate a GFE to substitute other DBE COA participation.

Contractor-Initiated Proposals—General

The Contractor cannot reduce the amount of work committed to a DBE firm at contract award without good cause and only with written concurrence from the OEO. Reducing a COA DBE's Work is viewed as a partial DBE termination, subject to the procedures below.

INFORMATIONAL COPY ONLY - NOT FOR BIDDING

DBE Termination

A COA DBE Subcontractor may only be terminated in whole or part with the approval of the Contracting Agency (in coordination with OEO). Approval will be granted provided the Prime Contractor demonstrates that the termination is based on good cause.

Good cause typically includes situations where the DBE Subcontractor is unable or has failed to perform the work of its subcontract in accordance with normal industry standards. While not all inclusive, some examples of good cause include the following circumstances:

Good cause may exist if:

- The listed DBE Subcontractor fails or refuses to execute a written contract.
- The listed DBE Subcontractor fails or refuses to perform the work of its subcontract in a way consistent with normal industry standards.
- The listed DBE Subcontractor fails or refuses to meet the Prime Contractor's reasonable, nondiscriminatory bond requirements.
- The listed DBE Subcontractor becomes bankrupt, insolvent, or exhibits credit unworthiness.
- The listed DBE Subcontractor is ineligible to work on public works projects because of suspension and debarment proceedings pursuant 2 CFR Parts 180, 215 and 1,200 or applicable state law.
- The listed DBE Subcontractor voluntarily withdraws from the project and provides to you written notice of its withdrawal.
- The listed DBE is ineligible to receive DBE credit for the type of work required.
- A DBE owner dies or becomes disabled with the result that the listed DBE is unable to complete its work on the contract.

Good cause does not exist if:

- The Prime Contractor seeks to terminate a COA DBE so that the Prime can self-perform the Work.
- The Prime Contractor seeks to terminate a COA DBE so the Prime Contractor can substitute another DBE or non-DBE after contract award.
- The failure or refusal of the DBE Subcontractor to perform its work on the subcontract results from the bad faith or discriminatory action of the Prime Contractor (e.g., the failure of the Prime Contractor to make timely payments or the unnecessary placing of obstacles in the path of the DBE's Work).

INFORMATIONAL COPY ONLY - NOT FOR BIDDING

Prior to requesting termination, the Prime Contractor must give notice in writing to the DBE Subcontractor with a copy to the Contracting Agency of its intent to request to terminate DBE work and the reasons for doing so. The DBE Subcontractor shall have five (5) days to respond to the prime Contractor's notice. The DBE's response shall either support the termination or advise the Contracting Agency and the Prime Contractor of the reasons it objects to the termination of its subcontract.

When a COA DBE firm is "terminated" from a Contract (or fails to complete its Subcontract for any reason), the Prime Contractor shall make every good faith effort to substitute another DBE Firm (ref.to 49 CFR 26.53(g)).

Graduation
When a DBE firm "graduates" from the DBE program (during the course of an executed subcontract), the DBE participation of that firm "may" continue to count towards the contract DBE goal.

Decertification
When a COA DBE firm who has a signed subcontract in place with a Prime, later becomes "decertified" (during the course of that subcontract) – the DBE participation of that firm "may" continue to count towards the Contract DBE goal.

Counting payments
Payments to a DBE firm will count toward DBE goals only if the participation is in accordance with these specifications.

Prompt Payment
Prompt payment to all Subcontractors shall be in accordance with Section 1-08.1(1) of these Contract special provisions.

Payment
Compensation for all costs involved with complying with the conditions of this specification and any other associated DBE requirements is included in payment for the associated Contract items of Work.

Damages for Noncompliance
The Prime Contractor shall not discriminate on the basis of race, color, national origin, or sex in the performance of this Contract. The Prime Contractor shall carry out applicable requirements of 49 CFR Part 26 in the award and administration of Contracts, which contain funding assistance from the United States Department of Transportation. Failure by the Prime Contractor to carry out these requirements is a material breach of this Contract, which may result in the Termination of this Contract or such other remedy as the Contracting Agency deems appropriate.

If the Prime Contractor does not comply with any part of its Contract as required under 49 CFR part 26, and/or any other applicable law or regulation regarding DBE, the Contracting Agency may withhold payment, suspend the ability of the Prime Contractor to participate in future Contracting Agency contracts, impose sanctions or Terminate the Contract, and subject the Prime Contractor to civil penalties of up to ten percent of the amount of the Contract for each violation. In the case of WSDOT Contracts, prequalification may be

INFORMATIONAL COPY ONLY - NOT FOR BIDDING

suspended pursuant to WAC 468-16-180, and continuous violations (exceeding a single violation) may also disqualify the Prime Contractor from further participation in WSDOT Contracts for a period of up to three years.

An apparent low Bidder must be in compliance with these Contract Provisions as a condition precedent to the granting of a notice of award by the Contracting Agency. The Prime Contractor is entitled to request an adjudicative proceeding with respect to the Contracting Agency's determination of Contract violation and assessed penalties by filing a written application within thirty days of receipt of notification. The adjudicative proceeding, if requested, will be conducted by an administrative law judge pursuant to the procedures set forth in RCW 34.05 and Chapter 10.08 of the Washington Administrative Code.

Federal Agency Inspection

Section 1-07.12 is supplemented with the following:

(July 30, 2012)
Required Federal Aid Provisions
The Required Contract Provisions Federal Aid Construction Contracts (FHWA 1273) Revised May 1, 2012 supersede any conflicting provisions of the Standard Specifications and are made a part of this Contract; provided, however, that if any of the provisions of FHWA 1273 are less restrictive than Washington State Law, then the Washington State Law shall prevail.

The provisions of FHWA 1273 included in this Contract require that the Contractor Insert the FHWA 1273 in each Subcontract, together with the wage rates which are part of the FHWA 1273. Also, a clause shall be included in each Subcontract requiring the Subcontractors to insert the FHWA 1273 thereto in any lower tier Subcontracts, together with the wage rates. The Contractor shall also ensure that this section, REQUIRED FEDERAL AID PROVISIONS, is inserted in each Subcontract for Subcontractors and lower tier Subcontractors. For this purpose, upon request to the Project Engineer, the Contractor will be provided with extra copies of the FHWA 1273, the applicable wage rates, and this Special Provision.

1-07.13 Contractor's Responsibility for Work

Repair of Damage

Section 1-07.13(4) is revised to read:

(August 6, 2001)
The Contractor shall promptly repair all damage to either temporary or permanent work as directed by the Engineer. For damage qualifying for relief under Sections 1-07.13(1), 1-07.13(2), or 1-07.13(3), payment will be made in accordance with Section 1-04.4. Payment will be limited to repair of damaged work only. No payment will be made for delay or disruption of work.

1-07.16 Protection and Restoration of Property

INFORMATIONAL COPY ONLY - NOT FOR BIDDING

Section 1-07.16 is supplemented with the following:

(******)

Notification

The Contractor shall distribute a special notice to each project resident before beginning work. Project resident means any person, company, or public agency having a driveway inside the project limits, within one mile of the project limits, or having a driveway or access on a dead-end road within the project limits. The special notice shall contain the following information and statements:

- Date of the notice.
- Project name, termini, and a description of the major phases of the work.
- Name of Contractor, Contractor's representative and 24 hour phone number.
- Scheduled project start and completion dates.
- Available detour routes.
- One-way traffic will be maintained during each working day.
- Two-way traffic will be restored at the end of each working day.
- All plants, trees, shrubs, gardens, sprinklers or structures within the limits of construction will be removed. Residents are to be advised to remove such property before work begins.
- Driveways will be restored to useable conditions at the end of each working day, without exception.
- Mail service interruptions or relocations. Statement that the Contractor will remove, temporarily relocate, and eventually reinstall mail receptacles. Statement that mailboxes, posts, etc., damaged by the Contractor will be replaced and installed at no charge to the resident.
- Possible problems with power, telephone, potable water, sewer, irrigation supply relocations and/or interruptions, if any.
- Temporary fencing requirements for livestock, if any.
- Residents are responsible for driveway culvert maintenance.
- Request to irrigators to eliminate water on the roadway and in the borrow ditches per Grant County Ordinance.

The Contractor must notify all affected Grant County agencies of the date and anticipated length of all road closures, including school districts, fire districts, Multi-Agency Communications Center (509) 762-1901, Sheriff's Dept. (509) 754-2011, Emergency Management (509) 762-1462, and U.S. Postal Service offices.

The Contractor must place a "Notice of Road Construction" in the legal newspaper of Grant County (Columbia Basin Herald). All notices must be provided a minimum of three (3) working days prior to beginning work. The County will not allow any work to be performed until the required notices are made by the Contractor.

(******)

Payment

The lump sum contract price for "Notification" shall be full compensation for all labor, equipment, materials, and tools necessary to perform the work outlined in this supplemental section.

1-07.17 Utilities And Similar Facilities

INFORMATIONAL COPY ONLY - NOT FOR BIDDING

Section 1-07.17 is supplemented with the following:

(******)
Locations and dimensions shown in the Plans for existing facilities are in accordance with available information obtained without uncovering, measuring, or other verification.

Public and private utilities, or their Contractors, will furnish all work necessary to adjust, relocate, replace, or construct their facilities unless otherwise provided for in the Plans or these Special Provisions. Such adjustment, relocation, replacement, or construction will be done during the prosecution of the work for this project.

The Contractor shall call the Utility Location Request Center (One Call Center), for field location, not less than two nor more than ten business days before the scheduled date for commencement of excavation which may affect underground utility facilities, unless otherwise agreed upon by the parties involved. A business day is defined as any day other than Saturday, Sunday, or a legal local, State, or Federal holiday. The telephone number for the One Call Center for this project is 1-800-424-5555. If no one-number locator service is available, notice shall be provided individually to those owners known to or suspected of having underground facilities within the area of proposed excavation.

The Contractor is alerted to the existence of Chapter 19.122 RCW, a law relating to underground utilities. Any cost to the Contractor incurred as a result of this law shall be at the Contractor's expense.

No excavation shall begin until all known facilities, in the vicinity of the excavation area, have been located and marked.

The Contractor can go to the following web site to find any changes to the Washington dig law that took effect in 2013
http://www.utc.wa.gov/publicSafety/pipelineSafety/Pages/CallBeforeYouDig-DigLaw.aspx

The following addresses and telephone numbers of utility companies and other agencies known or suspected of having facilities within the project limits are supplied for the Contractor's convenience:

- Grant County PUD, Tom Schwiesow
  30 C Street SW,
  Ephrata, WA 98823, (509) 754-3451 Ext. 2440
- Frontier Communication, Zeke Johnson
  320 East Penny Road
  Wenatchee, WA 98801, (509) 662-9262

1-07.18 Public Liability and Property Damage Insurance

Delete this section in its entirety, and replace it with the following:

1-07.18 Insurance

INFORMATIONAL COPY ONLY - NOT FOR BIDDING

(January 24, 2011 APWA GSP)

1-07.18(1) General Requirements

A. The Contractor shall obtain the insurance described in this section from insurers approved by the State Insurance Commissioner pursuant to RCW Title 48. The insurance must be provided by an insurer with a rating of A-: VII or higher in the A.M. Best's Key Rating Guide, which is licensed to do business in the state of Washington (or issued as a surplus line by a Washington Surplus lines broker). The Contracting Agency reserves the right to approve or reject the insurance provided, based on the insurer (including financial condition), terms and coverage, the Certificate of Insurance, and/or endorsements.

B. The Contractor shall keep this insurance in force during the term of the Contract and for thirty (30) days after the Physical Completion date, unless otherwise indicated (see C. below).

C. If any insurance policy is written on a claims made form, its retroactive date, and that of all subsequent renewals, shall be no later than the effective date of this Contract. The policy shall state that coverage is claims made, and state the retroactive date. Claims-made form coverage shall be maintained by the Contractor for a minimum of 36 months following the Final Completion or earlier termination of this Contract, and the Contractor shall annually provide the Contracting Agency with proof of renewal. If renewal of the claims made form of coverage becomes unavailable, or economically prohibitive, the Contractor shall purchase an extended reporting period ("tail") or execute another form of guarantee acceptable to the Contracting Agency to assure financial responsibility for liability for services performed.

D. The insurance policies shall contain a "cross liability" provision.

E. The Contractor's and all subContractors' insurance coverage shall be primary and non-contributory insurance as respects the Contracting Agency's insurance, self-insurance, or insurance pool coverage.

F. The Contractor shall provide the Contracting Agency and all Additional Insureds with written notice of any policy cancellation, within two business days of their receipt of such notice.

G. Upon request, the Contractor shall forward to the Contracting Agency a full and certified copy of the insurance policy(s).

H. The Contractor shall not begin work under the Contract until the required insurance has been obtained and approved by the Contracting Agency.

I. Failure on the part of the Contractor to maintain the insurance as required shall constitute a material breach of contract, upon which the Contracting Agency may, after giving five business days notice to the Contractor to correct the breach, immediately terminate the Contract or, at its discretion, procure or renew such insurance and pay any and all premiums in connection therewith, with any sums so expended to be repaid to the Contracting Agency on demand, or at the sole discretion of the Contracting Agency, offset against funds due the Contractor from the Contracting Agency.

J. All costs for insurance shall be incidental to and included in the unit or lump sum prices of the contract and no additional payment will be made.

INFORMATIONAL COPY ONLY - NOT FOR BIDDING

1-07.18(2) Additional Insured

All insurance policies, with the exception of Professional Liability and Workers Compensation, shall name the following listed entities as additional insured(s):

- the Contracting Agency and its officers, elected officials, employees, agents, and volunteers

The above-listed entities shall be additional insured(s) for the full available limits of liability maintained by the Contractor, whether primary, excess, contingent or otherwise, irrespective of whether such limits maintained by the Contractor are greater than those required by this Contract, and irrespective of whether the Certificate of Insurance provided by the Contractor pursuant to 1-07.18(3) describes limits lower than those maintained by the Contractor.

1-07.18(3) Subcontractors

Contractor shall ensure that each subcontractor of every tier obtains and maintains at a minimum the insurance coverages listed in 1-07.18(5)A and 1-07.18(5)B. Upon request of the Contracting Agency, the Contractor shall provide evidence of such insurance.

1-07.18(4) Evidence of Insurance

The Contractor shall deliver to the Contracting Agency a Certificate(s) of Insurance and endorsements for each policy of insurance meeting the requirements set forth herein when the Contractor delivers the signed Contract for the work. The certificate and endorsements must conform to the following requirements:

1. An ACORD certificate or a form determined by the Contracting Agency to be equivalent.
2. Copies of all endorsements naming Contracting Agency and all other entities listed in 1-07.18(2) as Additional Insured(s), showing the policy number. The Contractor may submit a copy of any blanket additional insured clause from its policies instead of a separate endorsement. A statement of additional insured status on an ACORD Certificate of Insurance shall <u>not</u> satisfy this requirement.
3. Any other amendatory endorsements to show the coverage required herein.

1-07.18(5) Coverages and Limits

The insurance shall provide the minimum coverages and limits set forth below. Providing coverage in these stated minimum limits shall not be construed to relieve the Contractor from liability in excess of such limits. All deductibles and self-insured retentions must be disclosed and are subject to approval by the Contracting Agency. The cost of any claim payments falling within the deductible shall be the responsibility of the Contractor.

1-07.18(5)A Commercial General Liability

A policy of Commercial General Liability Insurance, including:

Per project aggregate
Premises/Operations Liability
Products/Completed Operations – for a period of one year following final acceptance of the work.
Personal/Advertising Injury
Contractual Liability
Independent Contractors Liability
Stop Gap / Employers' Liability
Explosion, Collapse, or Underground Property Damage (XCU)

INFORMATIONAL COPY ONLY – NOT FOR BIDDING

Blasting (only required when the Contractor's work under this Contract includes exposures to which this specified coverage responds)

Such policy must provide the following minimum limits:

$1,000,000 Each Occurrence
$2,000,000 General Aggregate
$1,000,000 Products & Completed Operations Aggregate
$1,000,000 Personal & Advertising Injury, each offence

Stop Gap / Employers' Liability

$1,000,000 Each Accident
$1,000,000 Disease - Policy Limit
$1,000,000 Disease - Each Employee

1-07.18(5)B Automobile Liability

Automobile Liability for owned, non-owned, hired, and leased vehicles, with an MCS 90 endorsement and a CA 9948 endorsement attached if "pollutants" are to be transported. Such policy(ies) must provide the following minimum limit:

$1,000,000 combined single limit

1-07.18(5)C Workers' Compensation

The Contractor shall comply with Workers' Compensation coverage as required by the Industrial Insurance laws of the state of Washington.

1-07.23 Public Convenience and Safety

Construction Under Traffic

Section 1-07.23(1) is supplemented with the following:

(January 2, 2012)
Work Zone Clear Zone

The Work Zone Clear Zone (WZCZ) applies during working and nonworking hours. The WZCZ applies only to temporary roadside objects introduced by the Contractor's operations and does not apply to preexisting conditions or permanent Work. Those work operations that are actively in progress shall be in accordance with adopted and approved Traffic Control Plans, and other contract requirements.

During nonworking hours equipment or materials shall not be within the WZCZ unless they are protected by permanent guardrail or temporary concrete barrier. The use of temporary concrete barrier shall be permitted only if the Engineer approves the installation and location.

During actual hours of work, unless protected as described above, only materials absolutely necessary to construction shall be within the WZCZ and only construction vehicles absolutely necessary to construction shall be allowed within the WZCZ or allowed to stop or park on the shoulder of the roadway.

INFORMATIONAL COPY ONLY - NOT FOR BIDDING

The Contractor's nonessential vehicles and employees private vehicles shall not be permitted to park within the WZCZ at any time unless protected as described above.

Deviation from the above requirements shall not occur unless the Contractor has requested the deviation in writing and the Engineer has provided written approval.

Minimum WZCZ distances are measured from the edge of traveled way and will be determined as follows:

Regulatory Posted Speed	Distance from Traveled Way (Feet)
35 mph or less	10 *
40 mph	15
45 to 55 mph	20
60 mph or greater	30

* or 2-feet beyond the outside edge of sidewalk

Minimum Work Zone Clear Zone Distance

(******)

Payment

No additional compensation will be paid to the Contractor for any cost or expense incurred as a result of the requirements of this provision and all costs shall be considered incidental to and included in other applicable contract items.

PROSECUTION AND PROGRESS

Add the following new section:

1-08.0 Preliminary Matters

(May 25, 2006 APWA GSP)

Add the following new section:

1-08.0(1) Preconstruction Conference

(October 10, 2008 APWA GSP)

Prior to the Contractor beginning the work, a preconstruction conference will be held between the Contractor, the Engineer and such other interested parties as may be invited. The purpose of the preconstruction conference will be:

1. To review the initial progress schedule;
2. To establish a working understanding among the various parties associated or affected by the work;
3. To establish and review procedures for progress payment, notifications, approvals, submittals, etc.;
4. To establish normal working hours for the work;
5. To review safety standards and traffic control; and
6. To discuss such other related items as may be pertinent to the work.

INFORMATIONAL COPY ONLY - NOT FOR BIDDING

The Contractor shall prepare and submit at the preconstruction conference the following:

1. A breakdown of all lump sum items;
2. A preliminary schedule of working drawing submittals; and
3. A list of material sources for approval if applicable.

Add the following new section:

1-08.0(2) Hours of Work

(March 8, 2013 APWA GSP)

Except in the case of emergency or unless otherwise approved by the Contracting Agency, the normal straight time working hours for the Contract shall be any consecutive 8-hour period between 7:00 a.m. and 6:00 p.m. of a working day with a maximum 1-hour lunch break and a 5-day work week. The normal straight time 8-hour working period for the Contract shall be established at the preconstruction conference or prior to the Contractor commencing the work.

Written permission from the Engineer is required, if a Contractor desires to perform work on holidays, Saturdays, or Sundays; before 7:00 a.m. or after 6:00 p.m. on any day; or longer than an 8-hour period on any day. The Contractor shall apply in writing to the Engineer for such permission, no later than noon on the working day prior to the day for which the Contractor is requesting permission to work.

Permission to work between the hours of 10:00 p.m. and 7:00 a.m. during weekdays and between the hours of 10:00 p.m. and 9:00 a.m. on weekends or holidays may also be subject to noise control requirements. Approval to continue work during these hours may be revoked at any time the Contractor exceeds the Contracting Agency's noise control regulations or complaints are received from the public or adjoining property owners regarding the noise from the Contractor's operations. The Contractor shall have no claim for damages or delays should such permission be revoked for these reasons.

Permission to work Saturdays, Sundays, holidays, or other than the agreed upon normal straight time working hours Monday through Friday may be given subject to certain other conditions set forth by the Contracting Agency or Engineer. These conditions may include but are not limited to:

- The Engineer may require designated representatives to be present during the work. Representatives who may be deemed necessary by the Engineer include, but are not limited to: survey crews; personnel from the Contracting Agency's material testing lab; inspectors; and other Contracting Agency employees when in the opinion of the Engineer, such work necessitates their presence.
- On non-Federal aid projects, requiring the Contractor to reimburse the Contracting Agency for the costs in excess of straight-time costs for Contracting Agency representatives who worked during such times.
- Considering the work performed on Saturdays, Sundays, and holidays as working days with regard to the contract time.
- Considering multiple work shifts as multiple working days with respect to contract time, even though the multiple shifts occur in a single 24-hour period.

1-08.1 Subcontracting

INFORMATIONAL COPY ONLY NOT FOR BIDDING

Section 1-08.1 is supplemented with the following:

(October 12, 1998)
Prior to any subcontractor or agent beginning work, the Contractor shall submit to the Engineer a certification (WSDOT Form 420-004) that a written agreement between the Contractor and the subcontractor or between the subcontractor and any lower tier subcontractor has been executed. This certification shall also guarantee that these subcontract agreements include all the documents required by the Special Provision Federal Agency Inspection.

A subcontractor or lower tier subcontractor will not be permitted to perform any work under the contract until the following documents have been completed and submitted to the Engineer:

1. Request to Sublet Work (Form 421-012), and
2. Contractor and Subcontractor or Lower Tier Subcontractor Certification for Federal-aid Projects (Form 420-004).

The Contractor's records pertaining to the requirements of this Special Provision shall be open to inspection or audit by representatives of the Contracting Agency during the life of the contract and for a period of not less than three years after the date of acceptance of the contract. The Contractor shall retain these records for that period. The Contractor shall also guarantee that these records of all subcontractors and lower tier subcontractors shall be available and open to similar inspection or audit for the same time period.

Subcontract Completion and Return of Retainage Withheld

Section 1-08.1(1) is revised to read:

(August 4, 2014)
The following procedures shall apply to all subcontracts entered into as a part of this Contract:

Requirements

1. The Prime Contractor or Subcontractor shall make payment to the Subcontractor not later than ten days after receipt of payment from the Contracting Agency for work satisfactorily completed by the Subcontractor, to the extent of each Subcontractor's interest therein.

2. Prompt and full payment of retainage from the Prime Contractor to the Subcontractor shall be made within 30 days after Subcontractor's Work is satisfactorily completed.

3. For purposes of this Section, a Subcontractor's work is satisfactorily completed when all task and requirements of the Subcontract have been accomplished and including any required documentation and material testing.

4. Failure by a Prime Contractor or Subcontractor to comply with these requirements may result in one or more of the following:

   a. Withholding of payments until the Prime Contractor or Subcontractor complies

   b. Failure to comply shall be reflected in the Prime Contractor's Performance Evaluation

INFORMATIONAL COPY ONLY - NOT FOR BIDDING

c. Cancellation, Termination, or Suspension of the Contract, in whole or in part

d. Other sanctions as provided by the subcontract or by law under applicable prompt pay statutes.

Conditions
This clause does not create a contractual relationship between the Contracting Agency and any Subcontractor as stated in Section 1-08.1. Also, it is not intended to bestow upon any Subcontractor, the status of a third-party beneficiary to the Contract between the Contracting Agency and the Contractor.

Payment
The Contractor will be solely responsible for any additional costs involved in paying retainage to the Subcontractors. Those costs shall be incidental to the respective Bid Items.

1-08.4 Prosecution Of Work

The first sentence of Section 1-08.4 is revised to read:

(******)
The Contractor shall begin work on October 13, 2014, unless otherwise approved by the Engineer.

1-08.5 Time For Completion

The third paragraph of Section 1-08.5 is revised to read:

(******)
Contract time shall begin on the first working day. The first working day shall be October 13, 2014, unless otherwise approved by the Engineer.

Section 1-08.5 is supplemented with the following:

(March 13, 1995)
This project shall be physically completed within 25 working days.

1-08.9 Liquidated Damages

(August 14, 2013 APWA GSP)

Revise the fourth paragraph to read:

When the Contract Work has progressed to Substantial Completion as defined in the Contract, the Engineer may determine that the work is Substantially Complete. The Engineer will notify the Contractor in writing of the Substantial Completion Date. For overruns in Contract time occurring after the date so established, the formula for liquidated damages shown above will not apply. For overruns in Contract time occurring after the Substantial Completion Date, liquidated damages shall be assessed on the basis of direct engineering and related costs assignable to the project until the actual Physical Completion Date of all the Contract Work. The Contractor shall complete the remaining Work as promptly as possible. Upon request by the Project Engineer, the Contractor shall furnish a written schedule for completing the physical Work on the Contract.

INFORMATIONAL COPY ONLY - NOT FOR BIDDING

Measurement and Payment

Payments

Section 1-09.9 is supplemented with the following:

Retainage

Section 1-09.9(1) content and title is deleted and replaced with the following:

(June 27, 2011)
Vacant

1-09.13 Claims Resolution

1-09.13(3) Claims $250,000 or Less

(October 1, 2005 APWA GSP)

Delete this Section and replace it with the following:

The Contractor and the Contracting Agency mutually agree that those claims that total $250,000 or less, submitted in accordance with Section 1-09.11 and not resolved by nonbinding ADR processes, shall be resolved through litigation unless the parties mutually agree in writing to resolve the claim through binding arbitration.

1-09.13(3)A Administration of Arbitration

(October 1, 2005 APWA GSP)

Revise the third paragraph to read:

The Contracting Agency and the Contractor mutually agree to be bound by the decision of the arbitrator, and judgment upon the award rendered by the arbitrator may be entered in the Superior Court of the county in which the Contracting Agency's headquarters are located. The decision of the arbitrator and the specific basis for the decision shall be in writing. The arbitrator shall use the contract as a basis for decisions.

TEMPORARY TRAFFIC CONTROL

General

Section 1-10.1 is supplemented with the following:

(April 1, 2013)
The Contracting Agency will provide the following labor, equipment and/or materials resources to the Contractor for use on the project.

*** Class A Traffic Signs as outlined in the included Construction Sign Plan and Sign Table ***

INFORMATIONAL COPY ONLY - NOT FOR BIDDING

The Contractor shall notify the Engineer when each resource is to be utilized and shall provide a minimum of *** 5 (five) *** working days advance notice to allow any necessary arrangements to be made.

1-10.2 Traffic Control Management

General

Section 1-10.2(1) is supplemented with the following:

(December 1, 2008)
Only training with WSDOT TCS card and WSDOT training curriculum is recognized in the State of Washington. The Traffic Control Supervisor shall be certified by one of the following:

The Northwest Laborers-Employers Training Trust
27055 Ohio Ave.
Kingston, WA 98346
(360) 297-3035

Evergreen Safety Council
401 Pontius Ave. N.
Seattle, WA 98109
1-800-521-0778 or (206) 382-4090

The American Traffic Safety Services Association
15 Riverside Parkway, Suite 100
Fredericksburg, Virginia 22406-1022
Training Dept. Toll Free (877) 642-4637
Phone: (540) 368-1701

1-10.2(2) Traffic Control Plans

Section 1-10.2(2) is supplemented with the following:

(******)
The County has provided the Traffic Sign Plan for this project and said plan(s) are included in these specifications and is made part of this contract.

The work contemplated in this contract will require the Contractor to take special precautions in implementing safe traffic control procedures in accordance with the MUTCD. The Contractor's attention is directed to WAC 296-155-305 as it relates to signing, signaling and flaggers. All questions concerning new standards should be directed to the Wash. State Dept. of Labor and Industries.

The Contractor will not be permitted to close either Stratford Road or Patton Blvd. One-way traffic must be remain open during work hours and two-way traffic restored at the end of each working day. Access to County road intersections, local farms and residences shall be kept open at all times.

1-10.3 Traffic Control Labor, Procedures and Devices

INFORMATIONAL COPY ONLY - NOT FOR BIDDING

1-10.3(3) Traffic Control Devices

Construction Signs

Section 1-10.3(3)A is supplemented with the following:

(******)
The required signs will be available to the Contractor at the Grant County Sign Shop, 124 Enterprise St. SE, Ephrata, WA, (509) 754-6085, on normal work days. The Contractor shall make arrangements with the Engineer at least five working days prior to picking up the signs. The Contractor shall sign an itemized receipt at the time of acquisition.

Signs shall be returned to Grant County Sign Shop by the Contractor when their need has ceased as determined by the Engineer. The value of signs furnished by the Contracting Agency to the Contractor is fixed at $10.00 per square foot. The value of such signs which are damaged or not returned as provided in Sections 1-10.1 and 1-10.3(3)A will be deducted from payment due or to become due the Contractor.

Wood Sign Posts
Use the charts below to determine post size for Class A construction signs.

One Post Installation

Post Size	Min. Sign Sq. Ft.	Max Sign Sq. Ft.
4x4	-	16.0
4x6	17.0	20.0
6x6	21.0	25.0
6x8	26.0	31.0

Two Post Installation
(For signs 5 feet or greater in width)

Post Size	Min. Sign Sq. Ft.	Max Sign Sq. Ft.
4x4	-	16.0
4x6	17.0	36.0
6x6	37.0	46.0
6x8	47.0	75.0 *

* The Engineer will determine the post size for signs greater than 75 square feet.

Barricades

Section 1-10.3(3)D is supplemented with the following:

(******)
The barricades, provided by the contractor, shall be Type III and constructed in accordance with the details shown in the MUTCD and the Standard Plans. The barricade width shall be eight (8) feet.

INFORMATIONAL COPY ONLY - NOT FOR BIDDING

As may be indicated in the Signing Plan, Traffic Control Plans, or the Contract Provisions, the Contractor may be required to install signs, warning lights, or both, on barricades

1-10.4 Measurement

Lump Sum Bid for Project (No Unit Items)

Section 1-10.4(1) is supplemented with the following:

(August 2, 2004)
The proposal contains the item "Project Temporary Traffic Control", lump sum. The provisions of Section 1-10.4(1) shall apply.

1-10.5 Payment

Section 1-10.5(1) is supplemented with the following:

(******)
The lump sum contract price for "Project Temporary Traffic Control" shall include all costs incurred by the Contractor in placing and maintaining Class A traffic control signs furnished by the County and in furnishing, placing, and maintaining traffic control devices including Class B signs, traffic control vehicles, traffic control supervisor, traffic control labor including flaggers, two-way radios, eight (8) foot wide Type III barricades, flashers, posts for signs and other equipment and materials in accordance with the Construction Sign Plan, Traffic Control Plan(s) and Section 1-10 of the Standard Specifications. Progress payment for the lump sum item "Project Temporary Traffic Control" will be made as follows:

1. When the initial temporary traffic control devices (Class A signs) are set up, fifty (50) percent of the amount bid for the item will be paid.
2. Payment for the remaining fifty (50) percent of the amount bid for the item will be paid on a prorated basis in accordance with the total job progress as determined by progress payments.

REMOVAL OF STRUCTURES AND OBSTRUCTIONS

2-02.3 Construction Requirements

Section 2-02.3 is supplemented with the following:

(******)
The existing cement concrete ramps shown on the plans on Patton Blvd shall be removed and replaced with Cement Concrete Ramps with Detectable Warning Surface as outlined in the plans and proposal. A total of 20 existing sidewalk ramps, 100 – 150 Square Yards of Cement Conc. Sidewalk, approximately 100 Linear Feet of Cement Conc. Curb and Gutter, and approximately 80-120 cubic yard of material under the existing ramps and sidewalks will be removed under this specification. The existing Cement Conc. Curb at ASPI Blvd., Loring Dr., the NE corner of 22nd Ave., Craig St. shall remain in place. Also, the curb at the intersection of Stratford Rd. and Maple Dr. shall remain in place Concrete sawcutting at an existing contraction joint and/or back of curb and clean removal at an existing expansion joint may be necessary at each

INFORMATIONAL COPY ONLY - NOT FOR BIDDING

ramp/sidewalk location, and shall be included in this specification. These locations will be staked by the Engineer.

(******)

Payment

The lump sum contract price for "Removal of Structure and Obstruction" shall be full compensation for all labor, equipment, materials, and tools necessary to perform the work outlined in this supplemental section.

DIVISION 5 SURFACE TREATMENTS AND PAVEMENTS

5-04.3(7)A2 Nonstatistical Evaluation

(******)

Mix designs for HMA accepted by Nonstatistical evaluation shall;

- Be submitted to the Project Engineer on WSDOT Form 350-042
- Have the aggregate structure and asphalt binder content determined in accordance with WSDOT Standard Operating Procedure 732 and meet the requirements of Sections 9-03.8(2) and 9-03.8(6).
- Have anti-strip requirements, if any, for the proposed mix design determined in accordance with WSDOT Test Method T 718 or based on historic anti-strip and aggregate source compatibility from WSDOT lab testing. Anti-strip evaluation of HMA mix designs utilized that include RAP will be completed without the inclusion of the RAP.

At or prior to the preconstruction meeting, the contractor shall provide one of the following mix design verification certifications for Contracting Agency review;

- The proposed mix design indicated on a WSDOT mix design/anti-strip report that is within one year of the approval date

- If the proposed mix design has not been referenced and previously verified by WSDOT State Materials Lab on a previous project, the Contractor shall also submit samples to the WSDOT State Materials Lab for WSDOT verification testing in accordance with WSDOT Standard Specifications.

The mix design will be performed by a lab accredited by a national authority such as Laboratory Accreditation Bureau, L-A-B for Construction Materials Testing, The Construction Materials Engineering Council (CMEC's) ISO 17025 or AASHTO Accreditation Program (AAP) and shall supply evidence of participation in the AASHTO Material Reference Laboratory (AMRL) program.

At the discretion of the Engineer, agencies may accept mix designs verified beyond the one year verification period with a certification from the Contractor that the materials and sources are the same as those shown on the original mix design.

Three working days prior to the first day of paving, up to six Ignition Furnace Calibration Samples shall be obtained to calibrate the Ignition Furnaces used for acceptance testing of

INFORMATIONAL COPY ONLY - NOT FOR BIDDING

the HMA. Calibration samples shall be provided by the Contractor when directed by the Engineer. Calibration samples shall be prepared in accordance with WSDOT SOP 728.

5-04.3(8)A1 General
(January 16, 2014 APWA GSP)

Delete this section and replace it with the following:

Acceptance of HMA shall be as defined under nonstatistical or commercial evaluation.

Nonstatistical evaluation will be used for all HMA not designated as Commercial HMA in the contract documents.

The mix design will be the initial JMF for the class of HMA. The Contractor may request a change in the JMF. Any adjustments to the JMF will require the approval of the Project Engineer and must be made in accordance with Section 9-03.8(7).

Commercial evaluation may be used for Commercial HMA and for other classes of HMA in the following applications: sidewalks, road approaches, ditches, slopes, paths, trails, gores, prelevel, and pavement repair. Other nonstructural applications of HMA accepted by commercial evaluation shall be as approved by the Project Engineer. Sampling and testing of HMA accepted by commercial evaluation will be at the option of the Project Engineer. Commercial HMA can be accepted by a contractor certificate of compliance letter stating the material meets the HMA requirements defined in the contract

5-04.5(1)B Price Adjustments for Quality of HMA Compaction
(January 16, 2014 APWA GSP)

Delete this section and replace it with the following:

The maximum CPF of a compaction lot is 1.00.

For each compaction lot of HMA when the CPF is less than 1.00, a Nonconforming Compaction Factor (NCCF) will be determined. THE NCCF equals the algebraic difference of CPF minus 1.00 multiplied by 40 percent. The Compaction Price Adjustment will be calculated as the product of the NCCF, the quantity of HMA in the lot in tons and the unit contract price per ton of the mix

DIVISION 8 MISCELLANEOUS CONSTRUCTION

CEMENT CONCRETE SIDEWALKS

Construction Requirements

(******)
Section 8-14 is supplemented with the following:

INFORMATIONAL COPY ONLY - NOT FOR BIDDING

Cement Conc. Sidewalk

Description
All new Cement Conc. Sidewalk and Cement Conc. Ramps shall be constructed upon 0.17' of compacted crushed surfacing top course.

Ramp Detectable Warning Retrofit

Description
This work consists of saw cutting and grinding existing cement concrete ramp, remove concrete and other material as necessary, and install Detectable Warning Surface per standard plan F-45.10-01.

Payment
Payment will be made in accordance with Section 1-04.1, for the following bid items when included in the proposal:

"Ramp Detectable Warning Retrofit" per each

Placing and Finishing Concrete

(******)
Section 8-14.3(3) is supplemented with the following:

The contractor shall coordinate Cement Conc. Ramp replacement with the Traffic Signal System Induction Loop work, modifications, temporary removal and replacement of existing utility/junctions boxes, and pedestrian pedestals. Pedestrian pedestal buttons shall be operational at all times (even if in a temporary fashion) and accessible to pedestrians during the course of ramp reconstruction. Demolished ramp and sidewalk areas shall be isolated from pedestrians during working and non-working hours. The Contractor will be required to detour pedestrians in a safe manner around the ramp areas during construction, and will complete any given ramp within 3 calendar days of original ramp or sidewalk removal.

Sidewalks and/or Ramps constructed with slopes greater than those allowed by the attached standard plans will be removed and reconstructed at the sole expense of the Contractor.

ILLUMINATION, TRAFFIC SIGNAL SYSTEMS, INTELLIGENT TRANSPORTATION SYSTEMS, AND ELECTRICAL

Construction Requirements

(******)
Section 8-20 is supplemented with the following:

Traffic Signal System Induction Loop

Description

INFORMATIONAL COPY ONLY - NOT FOR BIDDING

This work consists of replacing existing traffic loops as shown on the provided as-built drawings. The Contractor shall ensure that the induction loops to be installed are compatible with the existing signal system.

Payment
Payment will be made in accordance with Section 8-20.5, for the following bid item:

"Traffic Signal System Induction Loop" per lump sum

PAVEMENT MARKING

Materials

(******)
The first sentence of Section 8-22.2 is replaced with the following:

Paint Material for pavement lines and pavement markings shall be **Waterborne** paint and be chosen from WSDOT QPL listings for 9-34.2(5) – Pavement Marking – Low VOC Waterborne Paint.

Construction Requirements

Preliminary Spotting

The first sentence of Section 8-22.3(1) is replaced with the following:

(******)
The Contractor shall use established control points to assist in the preliminary spotting of the lines to be marked. Where control points are unavailable the Contractor shall establish such control as necessary to provide accurate preliminary spotting for pavement marking. The Engineer shall provide control points for no-pass zones.

Marking Application
Section 8-22.3(3) is supplemented with the following:

(******)
This contract contains new striping work and will require two applications of paint on a thoroughly swept pavement surface. 10 mils on the first pass and 15 mils on the second pass in the opposite direction. Glass beads for retro-reflective applications shall be applied at the rate of 7 pounds per gallon of paint.

The Contractor shall use a three gun paint spray system for all striping on this contract.

Measurement
Section 8-22.4 is supplemented with the following:

(******)
The following are the approximate linear foot lengths of pavement markings required on this project:

Patton Blvd:
Painted 2 Way Turn Lane – 1,122 L.F.
Painted Skip Centerline with No-Pass – 11,210 L.F.

INFORMATIONAL COPY ONLY - NOT FOR BIDDING

Painted Lane Line-22,296 L.F.
Painted Edge Line 12' Lane – 1,061 L.F.

Stratford Road:
Painted 2 Way Turn Lane-8,294 L.F.
Painted Skip Centerline – 8,282 L.F.
Painted Skip Centerline with No-Pass – 3,092 L.F.
Painted Lane Line-1,640 L.F.
Painted Double Line-780 L.F.
Painted Skip centerline With No Pass-1,372L.F.
Painted Edge Line 12' Lane – 31,224 L.F.

(August 4, 2014)
Standard Plans

The State of Washington Standard Plans for Road, Bridge and Municipal Construction M21-01 transmitted under Publications Transmittal No. PT 14-046, effective August 4, 2014 is made a part of this contract.

INFORMATIONAL COPY ONLY - NOT FOR BIDDING

PROPOSAL

To: Board of County Commissioners
Grant County, Washington

Date:_____, 2014

This certifies that the undersigned has examined the location of **STRATFORD ROAD & PATTON BLVD. GRIND/INLAY PROJECT, CRP 14-02 & 14-03, in Grant County, Washington**, and that the plans, specifications and contract governing the work embraced in the improvement, and the method by which payment will be made for said work is understood. The undersigned hereby proposes to undertake and complete the work embraced in this improvement, or as much thereof as can be completed with the money available in accordance with said plans, specifications and contract and at the following schedule of rates and prices.

STRATFORD ROAD & PATTON BLVD. GRIND/INLAY PROJECT

Note: Unit prices for all items, all extensions, and total amount must be shown. Please type or use ink. Please initial all changes.

Item No.	Plan Quantity	Item Description	Price per Unit* Dollars . Cents	Total Amount Dollars . Cents
PREPARATION				
1	100% Lump Sum	Mobilization	At ////////./////// Per Lump Sum	.
2	100% Lump Sum	Notification	At ////////./////// Per Lump Sum	.
3	100% Lump Sum	Removal Of Structure and Obstruction	At ////////./////// Per Lump Sum	.
SURFACING				
4	75 C.Y.	Crushed Surfacing Top Course	At . Per Cubic Yard	.
HOT MIX ASPHALT				
5	101,258 S.Y.	Planing Bituminous Pavement	At . Per Square Yard	.
6	11,950 Ton	HMA Cl. ½ In. PG64-28	At . Per Ton	.

INFORMATIONAL COPY ONLY - NOT FOR BIDDING

Item No.	Plan Quantity	Item Description	Price per Unit* Dollars . Cents	Total Amount Dollars . Cents
7	Calculated	Job Mix Compliance Price Adjustment	At ////////./////// Calculated	-$2.00
8	Calculated	Compaction Price Adjustment	At ////////./////// Calculated	-$2.00
TRAFFIC				
9	25,808 Lin. Ft.	Temporary Pavement Marking	At . Per Linear Foot	.
10	90,373 Lin. Ft.	Paint Line	At . Per Linear Foot	.
11	2,100 Lin. Ft.	Painted Wide Line	At . Per Linear Foot	.
12	880 S. Ft.	Painted Crosswalk Line	At . Per Square Foot	.
13	13 Each	Painted Traffic Arrow	At . Per Each	.
14	2 Each	Painted Railroad Crossing Symbol	At . Per Each	.
15	64 L.F.	Painted Stop Line	At . Per Linear Foot	.
16	100 S.Y.	Cement Conc. Sidewalk	At . Per Square Yard	.
17	11 Each	Cement Concrete Curb Ramp Type Perpendicular A	At . Per Each	.

INFORMATIONAL COPY ONLY - NOT FOR BIDDING

Item No.	Plan Quantity	Item Description	Price per Unit* Dollars . Cents	Total Amount Dollars . Cents
18	9 Each	Cement Concrete Curb Ramp Type Parallel A	At . Per Each	.
19	90 L.F.	Cement Concrete Traffic Curb and Gutter	At . Per Linear Foot	.
20	300 L.F.	Cement Concrete Pedestrian Curb and Gutter	At . Per Linear Foot	.
21	100% Lump Sum	Project Temporary Traffic Control	At ////////./////// Per Lump Sum	.
OTHER ITEMS				
22	100% Lump Sum	SPCC Plan	At ////////./////// Per Lump Sum	.
23	4 Each	Ramp Detectable Warning Retrofit	At . Per Each	.
24	100% Lump Sum	Trimming and Cleanup	At ////////./////// Per Lump Sum	.
25	100% Lump Sum	Traffic Signal System Induction Loop	At ////////./////// Per Lump Sum	.
26	Calculated	Minor Change	At ////////./////// Calculated	-$2.00

PROJECT Total	.

INFORMATIONAL COPY ONLY - NOT FOR BIDDING

Failure to return this Declaration as part of the bid proposal package will make the bid nonresponsive and ineligible for award.

NON-COLLUSION DECLARATION

I, by signing the proposal, hereby declare, under penalty of perjury under the laws of the United States that the following statements are true and correct:

1. That the undersigned person(s), firm, association, or corporation has (have) not, either directly or indirectly, entered into any agreement, participated in any collusion, or otherwise taken any action in restraint of free competitive bidding in connection with the project for which this proposal is submitted.

2. **That by signing the signature page of this proposal, I am deemed to have signed and have agreed to the provisions of this declaration.**

NOTICE TO ALL BIDDERS

To report bid rigging activities call:

1-800-424-9071

The U.S. Department of Transportation (USDOT) operates the above toll-free "hotline" Monday through Friday, 8:00 a.m. to 5:00 p.m., Eastern Time. Anyone with knowledge of possible bid rigging, bidder collusion, or other fraudulent activities should use the "hotline" to report such activities.

The "hotline" is part of USDOT's continuing effort to identify and investigate highway construction contract fraud and abuse and is operated under the direction of the USDOT Inspector General. All information will be treated confidentially and caller anonymity will be respected.

Revised 6/14

From DOT Form 272-036I EF
07/2011

INFORMATIONAL COPY ONLY - NOT FOR BIDDING

Proposal – Signature Page

The bidder is hereby advised that by signature of this proposal he/she is deemed to have acknowledged all requirements and signed all certificates contained herein.

A proposal guaranty in an amount of five percent (5%) of the total bid, based upon the approximate estimate of quantities at the above prices and in the form as indicated below, is attached hereto:

Cash	☐	In the Amount of _____
Cashier's Check	☐	_____ Dollars
Certified Check	☐	($_____) Payable to the Grant County Treasurer
Proposal Bond	☐	In the Amount of 5% of the Bid

Receipt is hereby acknowledged of addendum(s) No.(s) ____, ____ & ____.

Signature of Authorized Official(s)

Proposal Must Be Signed →

_____

_____

Please Print Name of Authorized Official

Firm Name _____

Address _____

_____

_____

State of Washington Contractor's License No. _____

Federal ID No. _____

Note:

(1) This proposal form is not transferable and any alteration entered hereon without prior permission from the County Engineer will be cause for considering the proposal irregular and subsequent rejection of bid.

(2) Please refer to section 1-02.6 of the standard specifications, re:"Preparation of Proposal" or "Article 4" of the instructions to bidders for building construction jobs.

(3) Should it be necessary to modify this proposal either in writing or by electronic means, please make reference to the following proposal number in your communication: _____

Revised 8/95

INFORMATIONAL COPY ONLY - NOT FOR BIDDING

Statement of Contractor Qualifications

To: Board of County Commissioners
Grant County, Washington

Date: _____, 2014

RE: **STRATFORD ROAD & PATTON BLVD. GRIND/INLAY PROJECT, CRP 14-02 & 14-03**

I hereby maintain that I am a responsible bidder as contemplated by the policies of the State of Washington and Chapter 36.77 of the Revised Code of Washington.

1. My permanent business name and address is _____ which I have maintained for ____ years. My phone is (____)_____ Fax (____)_____
2. I have adequate plant equipment to expeditiously and properly perform the work contemplated for Grant County, Washington. **Description of work:** This contract provides for the construction of 3.32 miles of HMA grind/inlay on Stratford Road, from MP 1.11 to MP 4.43, and the construction of 1.60 miles of HMA grind/inlay on Patton Blvd., from MP 0.00 to MP 1.60, Patton Blvd. is a four lane county road with intermittent turn lanes, and Stratford Road is both a two lane and four lane county road with intermittent turn lanes, both roads are in Grant County, WA, and includes planing bituminous pavement, hot mix asphalt, project temporary traffic control, painted centerline and edge line and other work all in accordance with the attached Contract Plans, these Contract Provisions and the Standard Specifications. (Please list equipment to be used on this project. Attach list if necessary.)

   _____

   _____
3. I have adequate funds to promptly meet obligations incident to this work. (Provide bank, contact & phone.) a) _____
   b) _____ c) _____
4. I have adequate experience in this class of work and I am thoroughly familiar with the specifications used in this project. I have constructed the following similar improvements: (Provide project name, contact & phone.)
   a) _____
   b) _____
5. I have submitted and maintain annually a "Standard Questionnaire and Financial Statement" to the Washington State Department of Transportation (WSDOT): Yes ☐ No ☐ Region: _____
   WSDOT has determined: a) I am prequalified to _____
   _____ in the amount of _____.__
   b) I have failed to be prequalified for the following reasons: ___
   _____.

   The Contracting Agency may determine a prospective Bidder who is not prequalified to perform certain types of work within the financial and experience constraints determined by WSDOT to be not responsible and refuse to award a contract.

   The Board of County Commissioners shall proceed to award the contract to the lowest and best bidder but may reject any or all bids if in its opinion good cause exists therefor. (RCW 36.77.040)

I hereby certify that the above statements are true and accurate.

Very truly yours,

By: _____

(Print Name) _____

Company Name: _____

Address: _____

City, State, Zip: _____

Washington State Contractor's License No.: _____

Revised 4/02

INFORMATIONAL COPY ONLY - NOT FOR BIDDING

Bid Bond

KNOW ALL MEN BY THESE PRESENTS:

That we, _____, as Principal, and _____, as Surety, are held and firmly bound unto Grant County, Washington, as Obligee, in the penal sum of _____ Dollars ($_____) for the payment of which the Principal and Surety bind themselves, their heirs, executors, administrators, successors and assigns, jointly and severally, by these presents.

The condition of the obligation is such that if the Obligee shall make any award to the Principal for **STRATFORD ROAD & PATTON BLVD. GRIND/INLAY PROJECT, CRP 14-02 & 14-03,** located in Grant County, Washington, according to the terms of the proposal or bid made by the Principal therefor, and the Principal shall duly make and enter into a contract with the Obligee in accordance with the terms of said proposal or bid and award and shall give bond for the faithful performance thereof, with the Surety or Sureties approved by the Obligee; or if the principal shall, in case of failure so to do, pay and forfeit to the Obligee the penal amount of the deposit specified in the call for bids, then this obligation shall be null and void; otherwise it shall be and remain in full force and effect and the Surety shall forthwith pay and forfeit to the Obligee, as penalty and liquidated damages, the amount of this bond.

SIGNED, SEALED AND DATED THIS ____ DAY OF _____, 2014

Principal _____

Surety _____

Attorney-in-Fact _____

INFORMATIONAL COPY ONLY - NOT FOR BIDDING

Grant County Public Works
124 Enterprise St. SE
Ephrata, WA. 98823

Local Agency Subcontractor List

Prepared in compliance with RCW 39.30.060 as amended

To Be Submitted with the Bid Proposal

Project Name: **STRATFORD ROAD & PATTON BLVD. GRIND/INLAY PROJECT**

Failure to list subcontractors who are proposed to perform the work of HVAC (heating, ventilation and air conditioning), plumbing, as described in Chapter 18.106 RCW, and electrical as described in Chapter 19.28 RCW, or naming more than one subcontractor to perform the same work will result in your bid being non-responsive and therefore void.

Subcontractor(s) that are proposed to perform the work of heating, ventilation and air conditioning, plumbing, as described in Chapter 18.106 RCW, and electrical as described in Chapter 19.28 RCW must be listed below. The work to be performed is to be listed below the subcontractor(s) name. The requirement to name the prime contract bidder's proposed HVAC, plumbing and electrical subcontractors applies only to proposed HVAC, plumbing, and electrical subcontractors who will contract directly with the prime contract bidder submitting the bid to the public entity.

If no subcontractor is listed below, the bidder acknowledges that it does not intend to use any subcontractor to perform those items of work.

Subcontractor Name _____
Work to be Performed _____
_____
_____

Subcontractor Name _____
Work to be Performed _____
_____
_____

Subcontractor Name _____
Work to be Performed _____
_____
_____

Subcontractor Name _____
Work to be Performed _____
_____
_____

Subcontractor Name _____
Work to be Performed _____
_____
_____

Bidder's are notified that the opinion of the enforcement agency PVC or metal conduit, junction boxes, etc, are considered electrical equipment and must be installed by a licensed electrical contractor, even if the installation is for future use and no wiring or electric current is connected during the project.
A licensed electrical contractor must be listed to perform the work.

INFORMATIONAL COPY ONLY - NOT FOR BIDDING

CONTRACT

THIS AGREEMENT, between the Board of County Commissioners of Grant County, State of Washington, acting under and by virtue of Chapter 36.77 of the Revised Code of Washington, as amended, hereinafter called the County, and _____, for itself, its heirs, executors, administrators, successors and assigns, hereinafter called the Contractor.

WITNESSETH:

That in consideration of the payments, covenants, and agreements, hereinafter mentioned, and attached and made a part of this agreement, to be made and performed by the parties hereto, and the parties hereto covenant and agree as follows:

DESCRIPTION OF WORK:

1. The Contractor shall do all work and furnish all tools, materials, and equipment necessary to improve and complete **STRATFORD ROAD & PATTON BLVD. GRIND/INLAY PROJECT, CRP 14-02 & 14-03,** located in Grant County, Washington, as proposed in a bid opened **1:30 P.M., Tuesday, September 23, 2014** in accordance with and as described in the herein attached plans and standard specifications, and in full compliance with the terms, conditions, and stipulations herein set forth and attached, now referred to any by such reference incorporated herein and made part hereof as fully for all purposes as if here set forth at length, and shall perform any alterations in or additions to the work covered by this contract and every part thereof and any force account work may be ordered as provided in this contract and every part thereof.

2. The Contractor shall provide and be at the expense of all materials, labor, carriage, tools, implements and conveniences and things of every description that may be requisite for the transfer of materials and for constructing and completing the work provided for in this contract and every part thereof.

3. The County hereby promises and agrees with the Contractor to employ, and does employ the Contractor to provide the materials and to do and cause to be done the above described work and to complete and finish the same according to the attached plans and specifications and the terms and conditions herein contained, and hereby contracts to pay for the same according to the attached specifications and the schedule of unit or itemized prices hereto attached, at the time and in the manner and upon the conditions provided for in this contract and every part thereof. The County further agrees to employ the Contractor to perform any alterations in or additions to the work covered by this contract and every part thereof and any force account work that may be ordered and pay for same under the terms of this contract and the attached plans and specifications.

4. The Contractor for himself, and for his heirs, executors, administrators and assigns, and successors and assigns, does hereby agree to the full performance of all the covenants herein contained upon the part of the Contractor.

5. It is further provided that no liability shall attach to the County by reason of entering into this contract, except as expressly provided herein.

INFORMATIONAL COPY ONLY - NOT FOR BIDDING

IN WITNESS WHEREOF, the said Contractor has executed this instrument, and the said Board of County Commissioners of Grant County has caused this instrument to be executed by and in the name of said Board by its Members, duly attested by its Clerk, the day and year below written, and the seal of said Board to be hereunto affixed on said date.

____day of _____, 2014

_____
Signature

_____
Print Name

_____
Firm Name

_____
Address

_____
City State Zip

(____)_____
Phone

ATTEST:

_____
Clerk of the Board

APPROVED AS TO FORM:

____day of _____2014

_____
Deputy Prosecuting Attorney

BOARD OF COUNTY COMMISSIONERS
OF GRANT COUNTY, WASHINGTON

Done this ____ day of _____, 2014

_____
Chair

_____
Member

_____
Member

INFORMATIONAL COPY ONLY - NOT FOR BIDDING

CONTRACT BOND

KNOW ALL MEN BY THESE PRESENTS:

That we, the undersigned, _____, as principal, and _____, a corporation organized and existing under the laws of the State of _____, as surety corporation, and qualified under the laws of the State of Washington to become surety upon bonds of contractors with municipal corporations, as surety, are jointly and severally held and firmly bound to Grant County, Washington, in the penal sum of _____ ($_____) for the payment of which sum on demand we bind ourselves and our successors, heirs, administrators or personal representatives, as the case may be.

This obligation is entered into in pursuance of the statutes of the State of Washington, the Ordinances of Grant County, Washington.

Dated at _____, Washington, this ____ day of _____, 2014.

The conditions of the above obligation are such that:

WHEREAS, on **September 23, 2014**, the Board of County Commissioners of said Grant County has let or is about to let to the Principal, a certain contract, the said contract providing for the improvement of **STRATFORD ROAD & PATTON BLVD. GRIND/INLAY PROJECT, CRP 14-02 & 14-03,** located in Grant County, Washington, (which contract is referred to herein and is made a part hereof as though attached hereto), and

WHEREAS, the said Principal has accepted, or is about to accept, the said contract, and undertake to perform the work therein provided for in the manner and within the time set forth;

NOW, THEREFORE, if the said Principal shall faithfully perform all of the provisions of said contract in the manner and within the time therein set forth or within such extensions of time as may be granted under said contract, and shall pay all laborers, mechanics, subcontractors and material men, and all persons who shall supply said Principal or subcontractors with provisions and supplies for the carrying on of said work, and shall hold said Grant County harmless from any loss or damage occasioned to any person or property by reason of any carelessness or negligence on the part of said Principal, or any subcontractor in the performance of said work and shall indemnify and hold Grant County harmless from any damage or expense by reason of failure of performance as specified in said contract or from defects appearing or developing in the material or workmanship provided or performed under said contract, and until the same is accepted, then and in that event this obligation shall be void but otherwise it shall be and remain in full force and effect.

Countersigned:

_____ _____

Licensed Agent/Surety Co. Principal

_____ _____

Attorney-in-Fact, Surety

_____ Approved as to form:

(_____)_____ _____, 2014

Firm, Street Address (No P.O. Box), Phone of Local Office of Agent Deputy Prosecuting Attorney

_____

Deputy Prosecuting Attorney

INFORMATIONAL COPY ONLY - NOT FOR BIDDING

INFORMATIONAL COPY ONLY - NOT FOR BIDDING

TITLE VI – Contractor Requirements

During the performance of this contract, the contractor/consultant, for itself, its assignees and successors in interest (hereinafter referred to as the "contractor") agrees as follows:

1. Compliance with Regulations

The contractor shall comply with the Regulations relative to non-discrimination in federally assisted programs of United States Department of Transportation (USDOT), Title 49, Code of Federal Regulations, part 21, as they may be amended from time to time, (hereinafter referred to as the Regulations), which are herein incorporated by reference and made a part of this contract.

2. Non-discrimination

The contractor, with regard to the work performed by it during the contract, shall not discriminate on the grounds of race, color, sex, or national origin in the selection and retention of sub-contractors, including procurement of materials and leases of equipment. The contractor shall not participate either directly or indirectly in the discrimination prohibited by Section 21.5 of the Regulations, including employment practices when the contract covers a program set forth in Appendix B of the Regulations.

3. Solicitations for Sub-contracts, Including Procurement of Materials and Equipment

In all solicitations either by competitive bidding or negotiations made by the contractor for work to be performed under a sub-contract, including procurement of materials or leases of equipment, each potential sub-contractor or supplier shall be notified by the contractor of the contractor's obligations under this contract and the Regulations relative to non-discrimination on the grounds of race, color, sex, or national origin.

4. Information and Reports

The contractor shall provide all information and reports required by the Regulations or directives issued pursuant thereto, and shall permit access to its books, records, accounts, other sources of information, and its facilities as may be determined by the contracting agency or the appropriate federal agency to be pertinent to ascertain compliance with such Regulations, orders and instructions. Where any information required of a contractor is in the exclusive possession of another who fails or refuses to furnish this information, the contractor shall so certify to WSDOT or the USDOT as appropriate, and shall set forth what efforts it has made to obtain the information.

5. Sanctions for Non-compliance

In the event of the contractor's non-compliance with the non-discrimination provisions of this contract, the contracting agency shall impose such contract sanctions as it or the USDOT may determine to be appropriate, including, but not limited to:

- Withholding of payments to the contractor under the contract until the contractor complies, and/or;
- Cancellation, termination, or suspension of the contract, in whole or in part

6. Incorporation of Provisions

The contractor shall include the provisions of paragraphs (1) through (5) in every sub-contract, including procurement of materials and leases of equipment, unless exempt by the Regulations, or directives issued pursuant thereto. The contractor shall take such action with respect to any sub-contractor or procurement as the contracting agency or USDOT may direct as a means of enforcing such provisions including sanctions for non-compliance.

Provided, however, that in the event a contractor becomes involved in, or is threatened with, litigation with a sub-contractor or supplier as a result of such direction, the contractor may request WSDOT enter into such litigation to protect the interests of the state and, in addition, the contractor may request the USDOT enter into such litigation to protect the interests of the United States.

INFORMATIONAL COPY ONLY - NOT FOR BIDDING

INFORMATIONAL COPY ONLY - NOT FOR BIDDING

Instructions for
Disadvantaged Business Enterprise Utilization Certification
(DOT Form 272-056)

To be eligible for award of the contract, the bidder shall properly complete and submit a Disadvantaged Business Enterprise Utilization Certification form with the bidder's sealed Bid Proposal that demonstrates how the bidder intends to meet the DBE Condition of Award (COA) goal.

Box 1: Name of Bidder (Proposal holder) submitting a bid.

Column 1: Name of the Disadvantaged Business Enterprise (DBE) and Certificate Number.

Column 2: The Project Role that the DBE will be performing as follows;

- Prime,
- Joint Venture,
- Subcontractor,
- Manufacturer,
- Regular Dealer*

The role is used to determine what portion of the DBE participation may be credited toward the goal. See *Crediting DBE Participation toward Meeting the Goal* as described in the *Disadvantaged Business Enterprise Condition of Award Participation* specification.

Column 3: A description of the work to be performed by the DBE consistent with the eligible Description of Work in the Directory of Certified DBE firms. If the DBE is to perform a portion of a bid item, then state Partial and what work is included, e.g., "Electrical (Partial) – Trenching". "Mobilization" will not be accepted as a description of work as it is not considered a distinct item of work that a DBE is certified to perform. The bidder may rely upon the descriptors listed in the Directory of Certified DBE Firms.

Column 4: The dollar amount for each DBE listed in the certification that the prime intends to apply towards meeting the DBE contract goal. It may be that only a portion of the amount paid to the DBE is eligible as COA participation. See *Crediting DBE Participation* in the special provisions; *Disadvantaged Business Enterprise Condition of Award Participation*.

Box 2: The goal stated in the contract in terms of a dollar amount or a percentage as noted under the general special provision; *DBE Condition of Award (COA) Goal*, *Disadvantaged Business Enterprise Condition of Award Participation*. When expressed as a percentage it is a percentage of the sum total of all bid items as submitted in the bidder's proposal.

Box 3: The total for column 4. This value must equal or exceed the goal amount.

* Note: In accordance with 49 CFR 26.55(e)(2)(i), if the materials or supplies are purchased from a DBE Regular Dealer, the amount to be counted towards the DBE will be sixty percent (60%) of the cost of the materials or supplies, e.g., Material cost: $100,000, allowable amount toward DBE goal; $60,000.

INFORMATIONAL COPY ONLY - NOT FOR BIDDING

INFORMATIONAL COPY ONLY - NOT FOR BIDDING

Local Agency Disadvantaged Business Enterprise (DBE) Written Confirmation Document

INFORMATIONAL COPY ONLY - NOT FOR BIDDING

As an authorized representative of the Disadvantaged Business Enterprise (DBE), I confirm that we have been contacted by the referenced bidder with regard to the referenced project and if the bidder is awarded the contract we will enter into an agreement with the bidder to participate in the project consistent with the information provided in the bidder's Disadvantaged Business Enterprise Utilization Certification.

Contract Title: _____

Bidder's Business Name: _____

DBE's Business Name: _____

DBE Signature: _____

DBE's Title: _____

Date: _____

The entries must be consistent with what is shown on the bidder's Disadvantaged Business Enterprise Utilization Certification. Failure to do so will result in bid rejection. See contract provision; *Disavantaged Business Enterprise Condition of Award Participation.*

Description of Work: _____

Amount to be Applied Towards Goal: _____

INFORMATIONAL COPY ONLY - NOT FOR BIDDING

Local Agency Disadvantaged Business Enterprise Utilization Certification

To be eligible for award of this contract the bidder must fill out and submit, as part of its bid proposal, the following Disadvantaged Business Enterprise Utilization Certification relating to Disadvantaged Business Enterprise (DBE) requirements. The Contracting Agency shall consider as non-responsive and shall reject any bid proposal that does not contain a DBE Certification which properly demonstrates that the bidder will meet the DBE participation requirements in one of the manners provided for in the proposed contract. The Bidder must submit good faith effort documentation with the DBE Utilization Certification ***only in the event*** the bidder's efforts to solicit sufficient DBE participation has been unsuccessful. The successful bidder's Disadvantage Business Enterprise Utilization Certification shall be deemed a part of the resulting contract. Information on certified firms is available from OMWBE, telephone 360-753-9693 or Toll Free 1-866-208-1064.

_____ certifies that the Disadvantaged Business Enterprise (DBE)
(Box 1) Name of Bidder

Firms listed below have been contacted regarding participation on this project. If this bidder is successful on this project and is awarded the contract, it shall assure that subcontracts or supply agreements are executed with those firms where an "Amount to be Applied Towards Goal" is listed. (If necessary, use additional sheet.)

Column 1 **Name of DBE Certificate Number**	Column 2 * **Project Role** (Prime, Joint Venture, Subcontractor, Manufacturer, Regular Dealer)	Column 3 **Description of Work**	Column 4 ** **Amount to be Applied Towards Goal**
1.			
2.			
3.			
4.			
5.			
6.			
7.			
8.			
9.			
10.			

Disadvantaged Business Enterprise Subcontracting Goal: _____ (Box 2) DBE Total $ _____ *** (Box 3)

* Regular Dealer status must be approved prior to bid submittal by the Office of Equal Opportunity, Wash. State Dept. of Transportation, on each contract.

** See the section "Crediting DBE Participation Toward Meeting the Goal" in the Contract Document.

*** The Contracting Agency will utilize this amount to determine whether or not the bidder has met the goal. In the event of an arithmetic difference between this total and the sum of the individual amounts listed above, then the sum of the amounts listed shall prevail and the total will be revised accordingly. Participation in excess of the goal amount will be considered voluntary or race-neutral participation.

SR

INFORMATIONAL COPY ONLY - NOT FOR BIDDING

INFORMATIONAL COPY ONLY - NOT FOR BIDDING

REQUIRED CONTRACT PROVISIONS FEDERAL-AID CONSTRUCTION CONTRACTS
FHWA-1273 -- Revised May 1, 2012

I. General
II. Nondiscrimination
III. Nonsegregated Facilities
IV. Davis-Bacon and Related Act Provisions
V. Contract Work Hours and Safety Standards Act Provisions
VI. Subletting or Assigning the Contract
VII. Safety: Accident Prevention
VIII. False Statements Concerning Highway Projects
IX. Implementation of Clean Air Act and Federal Water Pollution Control Act
X. Compliance with Governmentwide Suspension and Debarment Requirements
XI. Certification Regarding Use of Contract Funds for Lobbying

ATTACHMENTS

A. Employment and Materials Preference for Appalachian Development Highway System or Appalachian Local Access Road Contracts (included in Appalachian contracts only)

INFORMATIONAL COPY ONLY - NOT FOR BIDDING

I. GENERAL

1. Form FHWA-1273 must be physically incorporated in each construction contract funded under Title 23 (excluding emergency contracts solely intended for debris removal). The contractor (or subcontractor) must insert this form in each subcontract and further require its inclusion in all lower tier subcontracts (excluding purchase orders, rental agreements and other agreements for supplies or services).

The applicable requirements of Form FHWA-1273 are incorporated by reference for work done under any purchase order, rental agreement or agreement for other services. The prime contractor shall be responsible for compliance by any subcontractor, lower-tier subcontractor or service provider.

Form FHWA-1273 must be included in all Federal-aid design-build contracts, in all subcontracts and in lower-tier subcontracts (excluding subcontracts for design services, purchase orders, rental agreements and other agreements for supplies or services). The design-builder shall be responsible for compliance by any subcontractor, lower-tier subcontractor or service provider.

Contracting agencies may reference Form FHWA-1273 in bid proposal or request for proposal documents, however, the Form FHWA-1273 must be physically incorporated (not referenced) in all contracts, subcontracts and lower-tier subcontracts (excluding purchase orders, rental agreements and other agreements for supplies or services related to a construction contract).

2. Subject to the applicability criteria noted in the following sections, these contract provisions shall apply to all work performed on the contract by the contractor's own organization and with

the assistance of workers under the contractor's immediate superintendence and to all work performed on the contract by piecework, station work, or by subcontract.

3. A breach of any of the stipulations contained in these Required Contract Provisions may be sufficient grounds for withholding of progress payments, withholding of final payment, termination of the contract, suspension / debarment or any other action determined to be appropriate by the contracting agency and FHWA.

4. Selection of Labor: During the performance of this contract, the contractor shall not use convict labor for any purpose within the limits of a construction project on a Federal-aid highway unless it is labor performed by convicts who are on parole, supervised release, or probation. The term Federal-aid highway does not include roadways functionally classified as local roads or rural minor collectors.

II. NONDISCRIMINATION

The provisions of this section related to 23 CFR Part 230 are applicable to all Federal-aid construction contracts and to all related construction subcontracts of $10,000 or more. The provisions of 23 CFR Part 230 are not applicable to material supply, engineering, or architectural service contracts.

In addition, the contractor and all subcontractors must comply with the following policies: Executive Order 11246, 41 CFR 60, 29 CFR 1625-1627, Title 23 USC Section 140, the Rehabilitation Act of 1973, as amended (29 USC 794), Title VI of the Civil Rights Act of 1964, as amended, and related regulations including 49 CFR Parts 21, 26 and 27; and 23 CFR Parts 200, 230, and 633.

The contractor and all subcontractors must comply with: the requirements of the Equal Opportunity Clause in 41 CFR 60-1.4(b) and, for all construction contracts exceeding $10,000, the Standard Federal Equal Employment Opportunity Construction Contract Specifications in 41 CFR 60-4.3.

Note: The U.S. Department of Labor has exclusive authority to determine compliance with Executive Order 11246 and the policies of the Secretary of Labor including 41 CFR 60, and 29 CFR 1625-1627. The contracting agency and the FHWA have the authority and the responsibility to ensure compliance with Title 23 USC Section 140, the Rehabilitation Act of 1973, as amended (29 USC 794), and Title VI of the Civil Rights Act of 1964, as amended, and related regulations including 49 CFR Parts 21, 26 and 27; and 23 CFR Parts 200, 230, and 633.

The following provision is adopted from 23 CFR 230, Appendix A, with appropriate revisions to conform to the U.S. Department of Labor (US DOL) and FHWA requirements.

1. Equal Employment Opportunity: Equal employment opportunity (EEO) requirements not to discriminate and to take affirmative action to assure equal opportunity as set forth under laws, executive orders, rules, regulations (28 CFR 35, 29 CFR 1630, 29 CFR 1625-1627, 41 CFR 60 and 49 CFR 27) and orders of the Secretary of Labor as modified by the provisions prescribed herein, and imposed pursuant to 23 U.S.C. 140 shall constitute the EEO and specific affirmative action standards for the contractor's project activities under this contract. The provisions of the Americans with Disabilities Act of 1990 (42 U.S.C. 12101 et seq.) set forth under 28 CFR 35 and 29 CFR 1630 are incorporated by reference in this contract. In the execution of this

INFORMATIONAL COPY ONLY - NOT FOR BIDDING

contract, the contractor agrees to comply with the following minimum specific requirement activities of EEO:

a. The contractor will work with the contracting agency and the Federal Government to ensure that it has made every good faith effort to provide equal opportunity with respect to all of its terms and conditions of employment and in their review of activities under the contract.

b. The contractor will accept as its operating policy the following statement:

"It is the policy of this Company to assure that applicants are employed, and that employees are treated during employment, without regard to their race, religion, sex, color, national origin, age or disability. Such action shall include: employment, upgrading, demotion, or transfer; recruitment or recruitment advertising; layoff or termination; rates of pay or other forms of compensation; and selection for training, including apprenticeship, pre-apprenticeship, and/or on-the-job training."

2. EEO Officer: The contractor will designate and make known to the contracting officers an EEO Officer who will have the responsibility for and must be capable of effectively administering and promoting an active EEO program and who must be assigned adequate authority and responsibility to do so.

3. Dissemination of Policy: All members of the contractor's staff who are authorized to hire, supervise, promote, and discharge employees, or who recommend such action, or who are substantially involved in such action, will be made fully cognizant of, and will implement, the contractor's EEO policy and contractual responsibilities to provide EEO in each grade and classification of employment. To ensure that the above agreement will be met, the following actions will be taken as a minimum:

a. Periodic meetings of supervisory and personnel office employees will be conducted before the start of work and then not less often than once every six months, at which time the contractor's EEO policy and its implementation will be reviewed and explained. The meetings will be conducted by the EEO Officer.

b. All new supervisory or personnel office employees will be given a thorough indoctrination by the EEO Officer, covering all major aspects of the contractor's EEO obligations within thirty days following their reporting for duty with the contractor.

c. All personnel who are engaged in direct recruitment for the project will be instructed by the EEO Officer in the contractor's procedures for locating and hiring minorities and women.

d. Notices and posters setting forth the contractor's EEO policy will be placed in areas readily accessible to employees, applicants for employment and potential employees.

e. The contractor's EEO policy and the procedures to implement such policy will be brought to the attention of employees by means of meetings, employee handbooks, or other appropriate means.

4. Recruitment: When advertising for employees, the contractor will include in all advertisements for employees the notation: "An Equal Opportunity Employer." All such advertisements will be placed in publications having a large circulation among minorities and women in the area from which the project work force would normally be derived.

INFORMATIONAL COPY ONLY - NOT FOR BIDDING

a. The contractor will, unless precluded by a valid bargaining agreement, conduct systematic and direct recruitment through public and private employee referral sources likely to yield qualified minorities and women. To meet this requirement, the contractor will identify sources of potential minority group employees, and establish with such identified sources procedures whereby minority and women applicants may be referred to the contractor for employment consideration.

b. In the event the contractor has a valid bargaining agreement providing for exclusive hiring hall referrals, the contractor is expected to observe the provisions of that agreement to the extent that the system meets the contractor's compliance with EEO contract provisions. Where implementation of such an agreement has the effect of discriminating against minorities or women, or obligates the contractor to do the same, such implementation violates Federal nondiscrimination provisions.

c. The contractor will encourage its present employees to refer minorities and women as applicants for employment. Information and procedures with regard to referring such applicants will be discussed with employees.

5. Personnel Actions: Wages, working conditions, and employee benefits shall be established and administered, and personnel actions of every type, including hiring, upgrading, promotion, transfer, demotion, layoff, and termination, shall be taken without regard to race, color, religion, sex, national origin, age or disability. The following procedures shall be followed:

a. The contractor will conduct periodic inspections of project sites to insure that working conditions and employee facilities do not indicate discriminatory treatment of project site personnel.

b. The contractor will periodically evaluate the spread of wages paid within each classification to determine any evidence of discriminatory wage practices.

c. The contractor will periodically review selected personnel actions in depth to determine whether there is evidence of discrimination. Where evidence is found, the contractor will promptly take corrective action. If the review indicates that the discrimination may extend beyond the actions reviewed, such corrective action shall include all affected persons.

d. The contractor will promptly investigate all complaints of alleged discrimination made to the contractor in connection with its obligations under this contract, will attempt to resolve such complaints, and will take appropriate corrective action within a reasonable time. If the investigation indicates that the discrimination may affect persons other than the complainant, such corrective action shall include such other persons. Upon completion of each investigation, the contractor will inform every complainant of all of their avenues of appeal.

6. Training and Promotion:

a. The contractor will assist in locating, qualifying, and increasing the skills of minorities and women who are applicants for employment or current employees. Such efforts should be aimed at developing full journey level status employees in the type of trade or job classification involved.

INFORMATIONAL COPY ONLY - NOT FOR BIDDING

b. Consistent with the contractor's work force requirements and as permissible under Federal and State regulations, the contractor shall make full use of training programs, i.e., apprenticeship, and on-the-job training programs for the geographical area of contract performance. In the event a special provision for training is provided under this contract, this subparagraph will be superseded as indicated in the special provision. The contracting agency may reserve training positions for persons who receive welfare assistance in accordance with 23 U.S.C. 140(a).

c. The contractor will advise employees and applicants for employment of available training programs and entrance requirements for each.

d. The contractor will periodically review the training and promotion potential of employees who are minorities and women and will encourage eligible employees to apply for such training and promotion.

7. Unions: If the contractor relies in whole or in part upon unions as a source of employees, the contractor will use good faith efforts to obtain the cooperation of such unions to increase opportunities for minorities and women. Actions by the contractor, either directly or through a contractor's association acting as agent, will include the procedures set forth below:

a. The contractor will use good faith efforts to develop, in cooperation with the unions, joint training programs aimed toward qualifying more minorities and women for membership in the unions and increasing the skills of minorities and women so that they may qualify for higher paying employment.

b. The contractor will use good faith efforts to incorporate an EEO clause into each union agreement to the end that such union will be contractually bound to refer applicants without regard to their race, color, religion, sex, national origin, age or disability.

c. The contractor is to obtain information as to the referral practices and policies of the labor union except that to the extent such information is within the exclusive possession of the labor union and such labor union refuses to furnish such information to the contractor, the contractor shall so certify to the contracting agency and shall set forth what efforts have been made to obtain such information.

d. In the event the union is unable to provide the contractor with a reasonable flow of referrals within the time limit set forth in the collective bargaining agreement, the contractor will, through independent recruitment efforts, fill the employment vacancies without regard to race, color, religion, sex, national origin, age or disability; making full efforts to obtain qualified and/or qualifiable minorities and women. The failure of a union to provide sufficient referrals (even though it is obligated to provide exclusive referrals under the terms of a collective bargaining agreement) does not relieve the contractor from the requirements of this paragraph. In the event the union referral practice prevents the contractor from meeting the obligations pursuant to Executive Order 11246, as amended, and these special provisions, such contractor shall immediately notify the contracting agency.

8. Reasonable Accommodation for Applicants / Employees with Disabilities: The contractor must be familiar with the requirements for and comply with the Americans with Disabilities Act and all rules and regulations established there under. Employers must provide reasonable accommodation in all employment activities unless to do so would cause an undue hardship.

INFORMATIONAL COPY ONLY - NOT FOR BIDDING

9. Selection of Subcontractors, Procurement of Materials and Leasing of Equipment: The contractor shall not discriminate on the grounds of race, color, religion, sex, national origin, age or disability in the selection and retention of subcontractors, including procurement of materials and leases of equipment. The contractor shall take all necessary and reasonable steps to ensure nondiscrimination in the administration of this contract.

a. The contractor shall notify all potential subcontractors and suppliers and lessors of their EEO obligations under this contract.

b. The contractor will use good faith efforts to ensure subcontractor compliance with their EEO obligations.

10. Assurance Required by 49 CFR 26.13(b):

a. The requirements of 49 CFR Part 26 and the State DOT's U.S. DOT-approved DBE program are incorporated by reference.

b. The contractor or subcontractor shall not discriminate on the basis of race, color, national origin, or sex in the performance of this contract. The contractor shall carry out applicable requirements of 49 CFR Part 26 in the award and administration of DOT-assisted contracts. Failure by the contractor to carry out these requirements is a material breach of this contract, which may result in the termination of this contract or such other remedy as the contracting agency deems appropriate.

11. Records and Reports: The contractor shall keep such records as necessary to document compliance with the EEO requirements. Such records shall be retained for a period of three years following the date of the final payment to the contractor for all contract work and shall be available at reasonable times and places for inspection by authorized representatives of the contracting agency and the FHWA.

a. The records kept by the contractor shall document the following:

(1) The number and work hours of minority and non-minority group members and women employed in each work classification on the project;

(2) The progress and efforts being made in cooperation with unions, when applicable, to increase employment opportunities for minorities and women; and

(3) The progress and efforts being made in locating, hiring, training, qualifying, and upgrading minorities and women;

b. The contractors and subcontractors will submit an annual report to the contracting agency each July for the duration of the project, indicating the number of minority, women, and non-minority group employees currently engaged in each work classification required by the contract work. This information is to be reported on Form FHWA-1391. The staffing data should represent the project work force on board in all or any part of the last payroll period preceding the end of July. If on-the-job training is being required by special provision, the contractor will be required to collect and report training data. The employment data should reflect the work force on board during all or any part of the last payroll period preceding the end of July.

INFORMATIONAL COPY ONLY - NOT FOR BIDDING

III. NONSEGREGATED FACILITIES

This provision is applicable to all Federal-aid construction contracts and to all related construction subcontracts of $10,000 or more.

The contractor must ensure that facilities provided for employees are provided in such a manner that segregation on the basis of race, color, religion, sex, or national origin cannot result. The contractor may neither require such segregated use by written or oral policies nor tolerate such use by employee custom. The contractor's obligation extends further to ensure that its employees are not assigned to perform their services at any location, under the contractor's control, where the facilities are segregated. The term "facilities" includes waiting rooms, work areas, restaurants and other eating areas, time clocks, restrooms, washrooms, locker rooms, and other storage or dressing areas, parking lots, drinking fountains, recreation or entertainment areas, transportation, and housing provided for employees. The contractor shall provide separate or single-user restrooms and necessary dressing or sleeping areas to assure privacy between sexes.

IV. DAVIS-BACON AND RELATED ACT PROVISIONS

This section is applicable to all Federal-aid construction projects exceeding $2,000 and to all related subcontracts and lower-tier subcontracts (regardless of subcontract size). The requirements apply to all projects located within the right-of-way of a roadway that is functionally classified as Federal-aid highway. This excludes roadways functionally classified as local roads or rural minor collectors, which are exempt. Contracting agencies may elect to apply these requirements to other projects.

The following provisions are from the U.S. Department of Labor regulations in 29 CFR 5.5 "Contract provisions and related matters" with minor revisions to conform to the FHWA-1273 format and FHWA program requirements.

1. Minimum wages

a. All laborers and mechanics employed or working upon the site of the work, will be paid unconditionally and not less often than once a week, and without subsequent deduction or rebate on any account (except such payroll deductions as are permitted by regulations issued by the Secretary of Labor under the Copeland Act (29 CFR part 3)), the full amount of wages and bona fide fringe benefits (or cash equivalents thereof) due at time of payment computed at rates not less than those contained in the wage determination of the Secretary of Labor which is attached hereto and made a part hereof, regardless of any contractual relationship which may be alleged to exist between the contractor and such laborers and mechanics.

Contributions made or costs reasonably anticipated for bona fide fringe benefits under section 1(b)(2) of the Davis-Bacon Act on behalf of laborers or mechanics are considered wages paid to such laborers or mechanics, subject to the provisions of paragraph 1.d. of this section; also, regular contributions made or costs incurred for more than a weekly period (but not less often than quarterly) under plans, funds, or programs which cover the particular weekly period, are deemed to be constructively made or incurred during such weekly period. Such laborers and

INFORMATIONAL COPY ONLY - NOT FOR BIDDING

mechanics shall be paid the appropriate wage rate and fringe benefits on the wage determination for the classification of work actually performed, without regard to skill, except as provided in 29 CFR 5.5(a)(4). Laborers or mechanics performing work in more than one classification may be compensated at the rate specified for each classification for the time actually worked therein: Provided, That the employer's payroll records accurately set forth the time spent in each classification in which work is performed. The wage determination (including any additional classification and wage rates conformed under paragraph 1.b. of this section) and the Davis-Bacon poster (WH–1321) shall be posted at all times by the contractor and its subcontractors at the site of the work in a prominent and accessible place where it can be easily seen by the workers.

b. (1) The contracting officer shall require that any class of laborers or mechanics, including helpers, which is not listed in the wage determination and which is to be employed under the contract shall be classified in conformance with the wage determination. The contracting officer shall approve an additional classification and wage rate and fringe benefits therefore only when the following criteria have been met:

(i) The work to be performed by the classification requested is not performed by a classification in the wage determination; and

(ii) The classification is utilized in the area by the construction industry; and

(iii) The proposed wage rate, including any bona fide fringe benefits, bears a reasonable relationship to the wage rates contained in the wage determination.

(2) If the contractor and the laborers and mechanics to be employed in the classification (if known), or their representatives, and the contracting officer agree on the classification and wage rate (including the amount designated for fringe benefits where appropriate), a report of the action taken shall be sent by the contracting officer to the Administrator of the Wage and Hour Division, Employment Standards Administration, U.S. Department of Labor, Washington, DC 20210. The Administrator, or an authorized representative, will approve, modify, or disapprove every additional classification action within 30 days of receipt and so advise the contracting officer or will notify the contracting officer within the 30-day period that additional time is necessary.

(3) In the event the contractor, the laborers or mechanics to be employed in the classification or their representatives, and the contracting officer do not agree on the proposed classification and wage rate (including the amount designated for fringe benefits, where appropriate), the contracting officer shall refer the questions, including the views of all interested parties and the recommendation of the contracting officer, to the Wage and Hour Administrator for determination. The Wage and Hour Administrator, or an authorized representative, will issue a determination within 30 days of receipt and so advise the contracting officer or will notify the contracting officer within the 30-day period that additional time is necessary.

(4) The wage rate (including fringe benefits where appropriate) determined pursuant to paragraphs 1.b.(2) or 1.b.(3) of this section, shall be paid to all workers performing work in the classification under this contract from the first day on which work is performed in the classification.

INFORMATIONAL COPY ONLY - NOT FOR BIDDING

c. Whenever the minimum wage rate prescribed in the contract for a class of laborers or mechanics includes a fringe benefit which is not expressed as an hourly rate, the contractor shall either pay the benefit as stated in the wage determination or shall pay another bona fide fringe benefit or an hourly cash equivalent thereof.

d. If the contractor does not make payments to a trustee or other third person, the contractor may consider as part of the wages of any laborer or mechanic the amount of any costs reasonably anticipated in providing bona fide fringe benefits under a plan or program, Provided, That the Secretary of Labor has found, upon the written request of the contractor, that the applicable standards of the Davis-Bacon Act have been met. The Secretary of Labor may require the contractor to set aside in a separate account assets for the meeting of obligations under the plan or program.

2. Withholding

The contracting agency shall upon its own action or upon written request of an authorized representative of the Department of Labor, withhold or cause to be withheld from the contractor under this contract, or any other Federal contract with the same prime contractor, or any other federally-assisted contract subject to Davis-Bacon prevailing wage requirements, which is held by the same prime contractor, so much of the accrued payments or advances as may be considered necessary to pay laborers and mechanics, including apprentices, trainees, and helpers, employed by the contractor or any subcontractor the full amount of wages required by the contract. In the event of failure to pay any laborer or mechanic, including any apprentice, trainee, or helper, employed or working on the site of the work, all or part of the wages required by the contract, the contracting agency may, after written notice to the contractor, take such action as may be necessary to cause the suspension of any further payment, advance, or guarantee of funds until such violations have ceased.

3. Payrolls and basic records

a. Payrolls and basic records relating thereto shall be maintained by the contractor during the course of the work and preserved for a period of three years thereafter for all laborers and mechanics working at the site of the work. Such records shall contain the name, address, and social security number of each such worker, his or her correct classification, hourly rates of wages paid (including rates of contributions or costs anticipated for bona fide fringe benefits or cash equivalents thereof of the types described in section 1(b)(2)(B) of the Davis-Bacon Act), daily and weekly number of hours worked, deductions made and actual wages paid. Whenever the Secretary of Labor has found under 29 CFR 5.5(a)(1)(iv) that the wages of any laborer or mechanic include the amount of any costs reasonably anticipated in providing benefits under a plan or program described in section 1(b)(2)(B) of the Davis-Bacon Act, the contractor shall maintain records which show that the commitment to provide such benefits is enforceable, that the plan or program is financially responsible, and that the plan or program has been communicated in writing to the laborers or mechanics affected, and records which show the costs anticipated or the actual cost incurred in providing such benefits. Contractors employing apprentices or trainees under approved programs shall maintain written evidence of the registration of apprenticeship programs and certification of trainee programs, the registration of the apprentices and trainees, and the ratios and wage rates prescribed in the applicable programs.

INFORMATIONAL COPY ONLY - NOT FOR BIDDING

b. (1) The contractor shall submit weekly for each week in which any contract work is performed a copy of all payrolls to the contracting agency. The payrolls submitted shall set out accurately and completely all of the information required to be maintained under 29 CFR 5.5(a)(3)(i), except that full social security numbers and home addresses shall not be included on weekly transmittals. Instead the payrolls shall only need to include an individually identifying number for each employee (e.g. , the last four digits of the employee's social security number). The required weekly payroll information may be submitted in any form desired. Optional Form WH–347 is available for this purpose from the Wage and Hour Division Web site at http://www.dol.gov/esa/whd/forms/wh347instr.htm or its successor site. The prime contractor is responsible for the submission of copies of payrolls by all subcontractors. Contractors and subcontractors shall maintain the full social security number and current address of each covered worker, and shall provide them upon request to the contracting agency for transmission to the State DOT, the FHWA or the Wage and Hour Division of the Department of Labor for purposes of an investigation or audit of compliance with prevailing wage requirements. It is not a violation of this section for a prime contractor to require a subcontractor to provide addresses and social security numbers to the prime contractor for its own records, without weekly submission to the contracting agency..

(2) Each payroll submitted shall be accompanied by a "Statement of Compliance," signed by the contractor or subcontractor or his or her agent who pays or supervises the payment of the persons employed under the contract and shall certify the following:

(i) That the payroll for the payroll period contains the information required to be provided under §5.5 (a)(3)(ii) of Regulations, 29 CFR part 5, the appropriate information is being maintained under §5.5 (a)(3)(i) of Regulations, 29 CFR part 5, and that such information is correct and complete;

(ii) That each laborer or mechanic (including each helper, apprentice, and trainee) employed on the contract during the payroll period has been paid the full weekly wages earned, without rebate, either directly or indirectly, and that no deductions have been made either directly or indirectly from the full wages earned, other than permissible deductions as set forth in Regulations, 29 CFR part 3;

(iii) That each laborer or mechanic has been paid not less than the applicable wage rates and fringe benefits or cash equivalents for the classification of work performed, as specified in the applicable wage determination incorporated into the contract.

(3) The weekly submission of a properly executed certification set forth on the reverse side of Optional Form WH–347 shall satisfy the requirement for submission of the "Statement of Compliance" required by paragraph 3.b.(2) of this section.

(4) The falsification of any of the above certifications may subject the contractor or subcontractor to civil or criminal prosecution under section 1001 of title 18 and section 231 of title 31 of the United States Code.

c. The contractor or subcontractor shall make the records required under paragraph 3.a. of this section available for inspection, copying, or transcription by authorized representatives of the contracting agency, the State DOT, the FHWA, or the Department of Labor, and shall permit such representatives to interview employees during working hours on the job. If the contractor or subcontractor fails to submit the required records or to make them available, the FHWA may,

INFORMATIONAL COPY ONLY - NOT FOR BIDDING

after written notice to the contractor, the contracting agency or the State DOT, take such action as may be necessary to cause the suspension of any further payment, advance, or guarantee of funds. Furthermore, failure to submit the required records upon request or to make such records available may be grounds for debarment action pursuant to 29 CFR 5.12.

4. Apprentices and trainees

a. Apprentices (programs of the USDOL).

Apprentices will be permitted to work at less than the predetermined rate for the work they performed when they are employed pursuant to and individually registered in a bona fide apprenticeship program registered with the U.S. Department of Labor, Employment and Training Administration, Office of Apprenticeship Training, Employer and Labor Services, or with a State Apprenticeship Agency recognized by the Office, or if a person is employed in his or her first 90 days of probationary employment as an apprentice in such an apprenticeship program, who is not individually registered in the program, but who has been certified by the Office of Apprenticeship Training, Employer and Labor Services or a State Apprenticeship Agency (where appropriate) to be eligible for probationary employment as an apprentice.

The allowable ratio of apprentices to journeymen on the job site in any craft classification shall not be greater than the ratio permitted to the contractor as to the entire work force under the registered program. Any worker listed on a payroll at an apprentice wage rate, who is not registered or otherwise employed as stated above, shall be paid not less than the applicable wage rate on the wage determination for the classification of work actually performed. In addition, any apprentice performing work on the job site in excess of the ratio permitted under the registered program shall be paid not less than the applicable wage rate on the wage determination for the work actually performed. Where a contractor is performing construction on a project in a locality other than that in which its program is registered, the ratios and wage rates (expressed in percentages of the journeyman's hourly rate) specified in the contractor's or subcontractor's registered program shall be observed.

Every apprentice must be paid at not less than the rate specified in the registered program for the apprentice's level of progress, expressed as a percentage of the journeymen hourly rate specified in the applicable wage determination. Apprentices shall be paid fringe benefits in accordance with the provisions of the apprenticeship program. If the apprenticeship program does not specify fringe benefits, apprentices must be paid the full amount of fringe benefits listed on the wage determination for the applicable classification. If the Administrator determines that a different practice prevails for the applicable apprentice classification, fringes shall be paid in accordance with that determination.

In the event the Office of Apprenticeship Training, Employer and Labor Services, or a State Apprenticeship Agency recognized by the Office, withdraws approval of an apprenticeship program, the contractor will no longer be permitted to utilize apprentices at less than the applicable predetermined rate for the work performed until an acceptable program is approved.

b. Trainees (programs of the USDOL).

Except as provided in 29 CFR 5.16, trainees will not be permitted to work at less than the predetermined rate for the work performed unless they are employed pursuant to and

INFORMATIONAL COPY ONLY - NOT FOR BIDDING

individually registered in a program which has received prior approval, evidenced by formal certification by the U.S. Department of Labor, Employment and Training Administration.

The ratio of trainees to journeymen on the job site shall not be greater than permitted under the plan approved by the Employment and Training Administration.

Every trainee must be paid at not less than the rate specified in the approved program for the trainee's level of progress, expressed as a percentage of the journeyman hourly rate specified in the applicable wage determination. Trainees shall be paid fringe benefits in accordance with the provisions of the trainee program. If the trainee program does not mention fringe benefits, trainees shall be paid the full amount of fringe benefits listed on the wage determination unless the Administrator of the Wage and Hour Division determines that there is an apprenticeship program associated with the corresponding journeyman wage rate on the wage determination which provides for less than full fringe benefits for apprentices. Any employee listed on the payroll at a trainee rate who is not registered and participating in a training plan approved by the Employment and Training Administration shall be paid not less than the applicable wage rate on the wage determination for the classification of work actually performed. In addition, any trainee performing work on the job site in excess of the ratio permitted under the registered program shall be paid not less than the applicable wage rate on the wage determination for the work actually performed.

In the event the Employment and Training Administration withdraws approval of a training program, the contractor will no longer be permitted to utilize trainees at less than the applicable predetermined rate for the work performed until an acceptable program is approved.

c. Equal employment opportunity. The utilization of apprentices, trainees and journeymen under this part shall be in conformity with the equal employment opportunity requirements of Executive Order 11246, as amended, and 29 CFR part 30.

d. Apprentices and Trainees (programs of the U.S. DOT).

Apprentices and trainees working under apprenticeship and skill training programs which have been certified by the Secretary of Transportation as promoting EEO in connection with Federal-aid highway construction programs are not subject to the requirements of paragraph 4 of this Section IV. The straight time hourly wage rates for apprentices and trainees under such programs will be established by the particular programs. The ratio of apprentices and trainees to journeymen shall not be greater than permitted by the terms of the particular program.

5. Compliance with Copeland Act requirements. The contractor shall comply with the requirements of 29 CFR part 3, which are incorporated by reference in this contract.

6. Subcontracts. The contractor or subcontractor shall insert Form FHWA-1273 in any subcontracts and also require the subcontractors to include Form FHWA-1273 in any lower tier subcontracts. The prime contractor shall be responsible for the compliance by any subcontractor or lower tier subcontractor with all the contract clauses in 29 CFR 5.5.

7. Contract termination: debarment. A breach of the contract clauses in 29 CFR 5.5 may be grounds for termination of the contract, and for debarment as a contractor and a subcontractor as provided in 29 CFR 5.12.

INFORMATIONAL COPY ONLY - NOT FOR BIDDING

8. Compliance with Davis-Bacon and Related Act requirements. All rulings and interpretations of the Davis-Bacon and Related Acts contained in 29 CFR parts 1, 3, and 5 are herein incorporated by reference in this contract.

9. Disputes concerning labor standards. Disputes arising out of the labor standards provisions of this contract shall not be subject to the general disputes clause of this contract. Such disputes shall be resolved in accordance with the procedures of the Department of Labor set forth in 29 CFR parts 5, 6, and 7. Disputes within the meaning of this clause include disputes between the contractor (or any of its subcontractors) and the contracting agency, the U.S. Department of Labor, or the employees or their representatives.

10. Certification of eligibility.

a. By entering into this contract, the contractor certifies that neither it (nor he or she) nor any person or firm who has an interest in the contractor's firm is a person or firm ineligible to be awarded Government contracts by virtue of section 3(a) of the Davis-Bacon Act or 29 CFR 5.12(a)(1).

b. No part of this contract shall be subcontracted to any person or firm ineligible for award of a Government contract by virtue of section 3(a) of the Davis-Bacon Act or 29 CFR 5.12(a)(1).

c. The penalty for making false statements is prescribed in the U.S. Criminal Code, 18 U.S.C. 1001.

V. CONTRACT WORK HOURS AND SAFETY STANDARDS ACT

The following clauses apply to any Federal-aid construction contract in an amount in excess of $100,000 and subject to the overtime provisions of the Contract Work Hours and Safety Standards Act. These clauses shall be inserted in addition to the clauses required by 29 CFR 5.5(a) or 29 CFR 4.6. As used in this paragraph, the terms laborers and mechanics include watchmen and guards.

1. Overtime requirements. No contractor or subcontractor contracting for any part of the contract work which may require or involve the employment of laborers or mechanics shall require or permit any such laborer or mechanic in any workweek in which he or she is employed on such work to work in excess of forty hours in such workweek unless such laborer or mechanic receives compensation at a rate not less than one and one-half times the basic rate of pay for all hours worked in excess of forty hours in such workweek.

2. Violation; liability for unpaid wages; liquidated damages. In the event of any violation of the clause set forth in paragraph (1.) of this section, the contractor and any subcontractor responsible therefor shall be liable for the unpaid wages. In addition, such contractor and subcontractor shall be liable to the United States (in the case of work done under contract for the District of Columbia or a territory, to such District or to such territory), for liquidated damages. Such liquidated damages shall be computed with respect to each individual laborer or mechanic, including watchmen and guards, employed in violation of the clause set forth in paragraph (1.) of this section, in the sum of $10 for each calendar day on which such individual

INFORMATIONAL COPY ONLY - NOT FOR BIDDING

was required or permitted to work in excess of the standard workweek of forty hours without payment of the overtime wages required by the clause set forth in paragraph (1.) of this section.

3. Withholding for unpaid wages and liquidated damages. The FHWA or the contacting agency shall upon its own action or upon written request of an authorized representative of the Department of Labor withhold or cause to be withheld, from any moneys payable on account of work performed by the contractor or subcontractor under any such contract or any other Federal contract with the same prime contractor, or any other federally-assisted contract subject to the Contract Work Hours and Safety Standards Act, which is held by the same prime contractor, such sums as may be determined to be necessary to satisfy any liabilities of such contractor or subcontractor for unpaid wages and liquidated damages as provided in the clause set forth in paragraph (2.) of this section.

4. Subcontracts. The contractor or subcontractor shall insert in any subcontracts the clauses set forth in paragraph (1.) through (4.) of this section and also a clause requiring the subcontractors to include these clauses in any lower tier subcontracts. The prime contractor shall be responsible for compliance by any subcontractor or lower tier subcontractor with the clauses set forth in paragraphs (1.) through (4.) of this section.

VI. SUBLETTING OR ASSIGNING THE CONTRACT

This provision is applicable to all Federal-aid construction contracts on the National Highway System.

1. The contractor shall perform with its own organization contract work amounting to not less than 30 percent (or a greater percentage if specified elsewhere in the contract) of the total original contract price, excluding any specialty items designated by the contracting agency. Specialty items may be performed by subcontract and the amount of any such specialty items performed may be deducted from the total original contract price before computing the amount of work required to be performed by the contractor's own organization (23 CFR 635.116).

a. The term "perform work with its own organization" refers to workers employed or leased by the prime contractor, and equipment owned or rented by the prime contractor, with or without operators. Such term does not include employees or equipment of a subcontractor or lower tier subcontractor, agents of the prime contractor, or any other assignees. The term may include payments for the costs of hiring leased employees from an employee leasing firm meeting all relevant Federal and State regulatory requirements. Leased employees may only be included in this term if the prime contractor meets all of the following conditions:

(1) the prime contractor maintains control over the supervision of the day-to-day activities of the leased employees;

(2) the prime contractor remains responsible for the quality of the work of the leased employees;

(3) the prime contractor retains all power to accept or exclude individual employees from work on the project; and

INFORMATIONAL COPY ONLY - NOT FOR BIDDING

(4) the prime contractor remains ultimately responsible for the payment of predetermined minimum wages, the submission of payrolls, statements of compliance and all other Federal regulatory requirements.

b. "Specialty Items" shall be construed to be limited to work that requires highly specialized knowledge, abilities, or equipment not ordinarily available in the type of contracting organizations qualified and expected to bid or propose on the contract as a whole and in general are to be limited to minor components of the overall contract.

2. The contract amount upon which the requirements set forth in paragraph (1) of Section VI is computed includes the cost of material and manufactured products which are to be purchased or produced by the contractor under the contract provisions.

3. The contractor shall furnish (a) a competent superintendent or supervisor who is employed by the firm, has full authority to direct performance of the work in accordance with the contract requirements, and is in charge of all construction operations (regardless of who performs the work) and (b) such other of its own organizational resources (supervision, management, and engineering services) as the contracting officer determines is necessary to assure the performance of the contract.

4. No portion of the contract shall be sublet, assigned or otherwise disposed of except with the written consent of the contracting officer, or authorized representative, and such consent when given shall not be construed to relieve the contractor of any responsibility for the fulfillment of the contract. Written consent will be given only after the contracting agency has assured that each subcontract is evidenced in writing and that it contains all pertinent provisions and requirements of the prime contract.

5. The 30% self-performance requirement of paragraph (1) is not applicable to design-build contracts; however, contracting agencies may establish their own self-performance requirements.

VII. SAFETY: ACCIDENT PREVENTION

This provision is applicable to all Federal-aid construction contracts and to all related subcontracts.

1. In the performance of this contract the contractor shall comply with all applicable Federal, State, and local laws governing safety, health, and sanitation (23 CFR 635). The contractor shall provide all safeguards, safety devices and protective equipment and take any other needed actions as it determines, or as the contracting officer may determine, to be reasonably necessary to protect the life and health of employees on the job and the safety of the public and to protect property in connection with the performance of the work covered by the contract.

2. It is a condition of this contract, and shall be made a condition of each subcontract, which the contractor enters into pursuant to this contract, that the contractor and any subcontractor shall not permit any employee, in performance of the contract, to work in surroundings or under conditions which are unsanitary, hazardous or dangerous to his/her health or safety, as determined under construction safety and health standards (29 CFR 1926) promulgated by the Secretary of Labor, in accordance with Section 107 of the Contract Work Hours and Safety Standards Act (40 U.S.C. 3704).

INFORMATIONAL COPY ONLY - NOT FOR BIDDING

3. Pursuant to 29 CFR 1926.3, it is a condition of this contract that the Secretary of Labor or authorized representative thereof, shall have right of entry to any site of contract performance to inspect or investigate the matter of compliance with the construction safety and health standards and to carry out the duties of the Secretary under Section 107 of the Contract Work Hours and Safety Standards Act (40 U.S.C.3704).

VIII. FALSE STATEMENTS CONCERNING HIGHWAY PROJECTS

This provision is applicable to all Federal-aid construction contracts and to all related subcontracts.

In order to assure high quality and durable construction in conformity with approved plans and specifications and a high degree of reliability on statements and representations made by engineers, contractors, suppliers, and workers on Federal-aid highway projects, it is essential that all persons concerned with the project perform their functions as carefully, thoroughly, and honestly as possible. Willful falsification, distortion, or misrepresentation with respect to any facts related to the project is a violation of Federal law. To prevent any misunderstanding regarding the seriousness of these and similar acts, Form FHWA-1022 shall be posted on each Federal-aid highway project (23 CFR 635) in one or more places where it is readily available to all persons concerned with the project:

18 U.S.C. 1020 reads as follows:

"Whoever, being an officer, agent, or employee of the United States, or of any State or Territory, or whoever, whether a person, association, firm, or corporation, knowingly makes any false statement, false representation, or false report as to the character, quality, quantity, or cost of the material used or to be used, or the quantity or quality of the work performed or to be performed, or the cost thereof in connection with the submission of plans, maps, specifications, contracts, or costs of construction on any highway or related project submitted for approval to the Secretary of Transportation; or

Whoever knowingly makes any false statement, false representation, false report or false claim with respect to the character, quality, quantity, or cost of any work performed or to be performed, or materials furnished or to be furnished, in connection with the construction of any highway or related project approved by the Secretary of Transportation; or

Whoever knowingly makes any false statement or false representation as to material fact in any statement, certificate, or report submitted pursuant to provisions of the Federal-aid Roads Act approved July 1, 1916, (39 Stat. 355), as amended and supplemented;

Shall be fined under this title or imprisoned not more than 5 years or both."

IX. IMPLEMENTATION OF CLEAN AIR ACT AND FEDERAL WATER POLLUTION CONTROL ACT

This provision is applicable to all Federal-aid construction contracts and to all related subcontracts.

INFORMATIONAL COPY ONLY - NOT FOR BIDDING

By submission of this bid/proposal or the execution of this contract, or subcontract, as appropriate, the bidder, proposer, Federal-aid construction contractor, or subcontractor, as appropriate, will be deemed to have stipulated as follows:

1. That any person who is or will be utilized in the performance of this contract is not prohibited from receiving an award due to a violation of Section 508 of the Clean Water Act or Section 306 of the Clean Air Act.
2. That the contractor agrees to include or cause to be included the requirements of paragraph (1) of this Section X in every subcontract, and further agrees to take such action as the contracting agency may direct as a means of enforcing such requirements.

X. CERTIFICATION REGARDING DEBARMENT, SUSPENSION, INELIGIBILITY AND VOLUNTARY EXCLUSION

This provision is applicable to all Federal-aid construction contracts, design-build contracts, subcontracts, lower-tier subcontracts, purchase orders, lease agreements, consultant contracts or any other covered transaction requiring FHWA approval or that is estimated to cost $25,000 or more – as defined in 2 CFR Parts 180 and 1200.

1. **Instructions for Certification – First Tier Participants:**

a. By signing and submitting this proposal, the prospective first tier participant is providing the certification set out below.

b. The inability of a person to provide the certification set out below will not necessarily result in denial of participation in this covered transaction. The prospective first tier participant shall submit an explanation of why it cannot provide the certification set out below. The certification or explanation will be considered in connection with the department or agency's determination whether to enter into this transaction. However, failure of the prospective first tier participant to furnish a certification or an explanation shall disqualify such a person from participation in this transaction.

c. The certification in this clause is a material representation of fact upon which reliance was placed when the contracting agency determined to enter into this transaction. If it is later determined that the prospective participant knowingly rendered an erroneous certification, in addition to other remedies available to the Federal Government, the contracting agency may terminate this transaction for cause of default.

d. The prospective first tier participant shall provide immediate written notice to the contracting agency to whom this proposal is submitted if any time the prospective first tier participant learns that its certification was erroneous when submitted or has become erroneous by reason of changed circumstances.

e. The terms "covered transaction," "debarred," "suspended," "ineligible," "participant," "person," "principal," and "voluntarily excluded," as used in this clause, are defined in 2 CFR Parts 180 and 1200. "First Tier Covered Transactions" refers to any covered transaction between a grantee or subgrantee of Federal funds and a participant (such as the prime or

INFORMATIONAL COPY ONLY - NOT FOR BIDDING

general contract). "Lower Tier Covered Transactions" refers to any covered transaction under a First Tier Covered Transaction (such as subcontracts). "First Tier Participant" refers to the participant who has entered into a covered transaction with a grantee or subgrantee of Federal funds (such as the prime or general contractor). "Lower Tier Participant" refers any participant who has entered into a covered transaction with a First Tier Participant or other Lower Tier Participants (such as subcontractors and suppliers).

f. The prospective first tier participant agrees by submitting this proposal that, should the proposed covered transaction be entered into, it shall not knowingly enter into any lower tier covered transaction with a person who is debarred, suspended, declared ineligible, or voluntarily excluded from participation in this covered transaction, unless authorized by the department or agency entering into this transaction.

g. The prospective first tier participant further agrees by submitting this proposal that it will include the clause titled "Certification Regarding Debarment, Suspension, Ineligibility and Voluntary Exclusion-Lower Tier Covered Transactions," provided by the department or contracting agency, entering into this covered transaction, without modification, in all lower tier covered transactions and in all solicitations for lower tier covered transactions exceeding the $25,000 threshold.

h. A participant in a covered transaction may rely upon a certification of a prospective participant in a lower tier covered transaction that is not debarred, suspended, ineligible, or voluntarily excluded from the covered transaction, unless it knows that the certification is erroneous. A participant is responsible for ensuring that its principals are not suspended, debarred, or otherwise ineligible to participate in covered transactions. To verify the eligibility of its principals, as well as the eligibility of any lower tier prospective participants, each participant may, but is not required to, check the Excluded Parties List System website (https://www.epls.gov/), which is compiled by the General Services Administration.

i. Nothing contained in the foregoing shall be construed to require the establishment of a system of records in order to render in good faith the certification required by this clause. The knowledge and information of the prospective participant is not required to exceed that which is normally possessed by a prudent person in the ordinary course of business dealings.

j. Except for transactions authorized under paragraph (f) of these instructions, if a participant in a covered transaction knowingly enters into a lower tier covered transaction with a person who is suspended, debarred, ineligible, or voluntarily excluded from participation in this transaction, in addition to other remedies available to the Federal Government, the department or agency may terminate this transaction for cause or default.

* * * * *

2. Certification Regarding Debarment, Suspension, Ineligibility and Voluntary Exclusion – First Tier Participants:

a. The prospective first tier participant certifies to the best of its knowledge and belief, that it and its principals:

(1) Are not presently debarred, suspended, proposed for debarment, declared ineligible, or voluntarily excluded from participating in covered transactions by any Federal department or agency;

INFORMATIONAL COPY ONLY - NOT FOR BIDDING

(2) Have not within a three-year period preceding this proposal been convicted of or had a civil judgment rendered against them for commission of fraud or a criminal offense in connection with obtaining, attempting to obtain, or performing a public (Federal, State or local) transaction or contract under a public transaction; violation of Federal or State antitrust statutes or commission of embezzlement, theft, forgery, bribery, falsification or destruction of records, making false statements, or receiving stolen property;

(3) Are not presently indicted for or otherwise criminally or civilly charged by a governmental entity (Federal, State or local) with commission of any of the offenses enumerated in paragraph (a)(2) of this certification; and

(4) Have not within a three-year period preceding this application/proposal had one or more public transactions (Federal, State or local) terminated for cause or default.

b. Where the prospective participant is unable to certify to any of the statements in this certification, such prospective participant shall attach an explanation to this proposal.

2. **Instructions for Certification - Lower Tier Participants:**

(Applicable to all subcontracts, purchase orders and other lower tier transactions requiring prior FHWA approval or estimated to cost $25,000 or more - 2 CFR Parts 180 and 1200)

a. By signing and submitting this proposal, the prospective lower tier is providing the certification set out below.

b. The certification in this clause is a material representation of fact upon which reliance was placed when this transaction was entered into. If it is later determined that the prospective lower tier participant knowingly rendered an erroneous certification, in addition to other remedies available to the Federal Government, the department, or agency with which this transaction originated may pursue available remedies, including suspension and/or debarment.

c. The prospective lower tier participant shall provide immediate written notice to the person to which this proposal is submitted if at any time the prospective lower tier participant learns that its certification was erroneous by reason of changed circumstances.

d. The terms "covered transaction," "debarred," "suspended," "ineligible," "participant," "person," "principal," and "voluntarily excluded," as used in this clause, are defined in 2 CFR Parts 180 and 1200. You may contact the person to which this proposal is submitted for assistance in obtaining a copy of those regulations. "First Tier Covered Transactions" refers to any covered transaction between a grantee or subgrantee of Federal funds and a participant (such as the prime or general contract). "Lower Tier Covered Transactions" refers to any covered transaction under a First Tier Covered Transaction (such as subcontracts). "First Tier Participant" refers to the participant who has entered into a covered transaction with a grantee or subgrantee of Federal funds (such as the prime or general contractor). "Lower Tier Participant" refers any participant who has entered into a covered transaction with a First Tier Participant or other Lower Tier Participants (such as subcontractors and suppliers).

e. The prospective lower tier participant agrees by submitting this proposal that, should the proposed covered transaction be entered into, it shall not knowingly enter into any lower tier covered transaction with a person who is debarred, suspended, declared ineligible, or

INFORMATIONAL COPY ONLY - NOT FOR BIDDING

voluntarily excluded from participation in this covered transaction, unless authorized by the department or agency with which this transaction originated.

f. The prospective lower tier participant further agrees by submitting this proposal that it will include this clause titled "Certification Regarding Debarment, Suspension, Ineligibility and Voluntary Exclusion-Lower Tier Covered Transaction," without modification, in all lower tier covered transactions and in all solicitations for lower tier covered transactions exceeding the $25,000 threshold.

g. A participant in a covered transaction may rely upon a certification of a prospective participant in a lower tier covered transaction that is not debarred, suspended, ineligible, or voluntarily excluded from the covered transaction, unless it knows that the certification is erroneous. A participant is responsible for ensuring that its principals are not suspended, debarred, or otherwise ineligible to participate in covered transactions. To verify the eligibility of its principals, as well as the eligibility of any lower tier prospective participants, each participant may, but is not required to, check the Excluded Parties List System website (https://www.epls.gov/), which is compiled by the General Services Administration.

h. Nothing contained in the foregoing shall be construed to require establishment of a system of records in order to render in good faith the certification required by this clause. The knowledge and information of participant is not required to exceed that which is normally possessed by a prudent person in the ordinary course of business dealings.

i. Except for transactions authorized under paragraph e of these instructions, if a participant in a covered transaction knowingly enters into a lower tier covered transaction with a person who is suspended, debarred, ineligible, or voluntarily excluded from participation in this transaction, in addition to other remedies available to the Federal Government, the department or agency with which this transaction originated may pursue available remedies, including suspension and/or debarment.

* * * * *

Certification Regarding Debarment, Suspension, Ineligibility and Voluntary Exclusion--Lower Tier Participants:

1. The prospective lower tier participant certifies, by submission of this proposal, that neither it nor its principals is presently debarred, suspended, proposed for debarment, declared ineligible, or voluntarily excluded from participating in covered transactions by any Federal department or agency.

2. Where the prospective lower tier participant is unable to certify to any of the statements in this certification, such prospective participant shall attach an explanation to this proposal.

* * * * *

INFORMATIONAL COPY ONLY - NOT FOR BIDDING

XI. CERTIFICATION REGARDING USE OF CONTRACT FUNDS FOR LOBBYING

This provision is applicable to all Federal-aid construction contracts and to all related subcontracts which exceed $100,000 (49 CFR 20).

1. The prospective participant certifies, by signing and submitting this bid or proposal, to the best of his or her knowledge and belief, that:

a. No Federal appropriated funds have been paid or will be paid, by or on behalf of the undersigned, to any person for influencing or attempting to influence an officer or employee of any Federal agency, a Member of Congress, an officer or employee of Congress, or an employee of a Member of Congress in connection with the awarding of any Federal contract, the making of any Federal grant, the making of any Federal loan, the entering into of any cooperative agreement, and the extension, continuation, renewal, amendment, or modification of any Federal contract, grant, loan, or cooperative agreement.

b. If any funds other than Federal appropriated funds have been paid or will be paid to any person for influencing or attempting to influence an officer or employee of any Federal agency, a Member of Congress, an officer or employee of Congress, or an employee of a Member of Congress in connection with this Federal contract, grant, loan, or cooperative agreement, the undersigned shall complete and submit Standard Form-LLL, "Disclosure Form to Report Lobbying," in accordance with its instructions.

2. This certification is a material representation of fact upon which reliance was placed when this transaction was made or entered into. Submission of this certification is a prerequisite for making or entering into this transaction imposed by 31 U.S.C. 1352. Any person who fails to file the required certification shall be subject to a civil penalty of not less than $10,000 and not more than $100,000 for each such failure.

3. The prospective participant also agrees by submitting its bid or proposal that the participant shall require that the language of this certification be included in all lower tier subcontracts, which exceed $100,000 and that all such recipients shall certify and disclose accordingly.

INFORMATIONAL COPY ONLY - NOT FOR BIDDING

ATTACHMENT A - EMPLOYMENT AND MATERIALS PREFERENCE FOR APPALACHIAN DEVELOPMENT HIGHWAY SYSTEM OR APPALACHIAN LOCAL ACCESS ROAD CONTRACTS

This provision is applicable to all Federal-aid projects funded under the Appalachian Regional Development Act of 1965.

1. During the performance of this contract, the contractor undertaking to do work which is, or reasonably may be, done as on-site work, shall give preference to qualified persons who regularly reside in the labor area as designated by the DOL wherein the contract work is situated, or the subregion, or the Appalachian counties of the State wherein the contract work is situated, except:

a. To the extent that qualified persons regularly residing in the area are not available.

b. For the reasonable needs of the contractor to employ supervisory or specially experienced personnel necessary to assure an efficient execution of the contract work.

c. For the obligation of the contractor to offer employment to present or former employees as the result of a lawful collective bargaining contract, provided that the number of nonresident persons employed under this subparagraph (1c) shall not exceed 20 percent of the total number of employees employed by the contractor on the contract work, except as provided in subparagraph (4) below.

2. The contractor shall place a job order with the State Employment Service indicating (a) the classifications of the laborers, mechanics and other employees required to perform the contract work, (b) the number of employees required in each classification, (c) the date on which the participant estimates such employees will be required, and (d) any other pertinent information required by the State Employment Service to complete the job order form. The job order may be placed with the State Employment Service in writing or by telephone. If during the course of the contract work, the information submitted by the contractor in the original job order is substantially modified, the participant shall promptly notify the State Employment Service.

3. The contractor shall give full consideration to all qualified job applicants referred to him by the State Employment Service. The contractor is not required to grant employment to any job applicants who, in his opinion, are not qualified to perform the classification of work required.

4. If, within one week following the placing of a job order by the contractor with the State Employment Service, the State Employment Service is unable to refer any qualified job applicants to the contractor, or less than the number requested, the State Employment Service will forward a certificate to the contractor indicating the unavailability of applicants. Such certificate shall be made a part of the contractor's permanent project records. Upon receipt of this certificate, the contractor may employ persons who do not normally reside in the labor area to fill positions covered by the certificate, notwithstanding the provisions of subparagraph (1c) above.

5.The provisions of 23 CFR 633.207(e) allow the contracting agency to provide a contractual preference for the use of mineral resource materials native to the Appalachian region.

6. The contractor shall include the provisions of Sections 1 through 4 of this Attachment A in every subcontract for work which is, or reasonably may be, done as on-site work.

INFORMATIONAL COPY ONLY - NOT FOR BIDDING

Washington State Department of Labor and Industries
Policy Statement
(Regarding the Production of "Standard" or "Non-standard" Items)

Below is the department's (State L&I's) list of criteria to be used in determining whether a prefabricated item is "standard" or "non-standard". For items not appearing on WSDOT's predetermined list, these criteria shall be used by the Contractor (and the Contractor's subcontractors, agents to subcontractors, suppliers, manufacturers, and fabricators) to determine coverage under RCW 39.12. The production, in the State of Washington, of non-standard items is covered by RCW 39.12, and the production of standard items is not. The production of any item outside the State of Washington is not covered by RCW 39.12.

1. Is the item fabricated for a public works project? If not, it is not subject to RCW 39.12. If it is, go to question 2.

2. Is the item fabricated on the public works jobsite? If it is, the work is covered under RCW 39.12. If not, go to question 3.

3. Is the item fabricated in an assembly/fabrication plant set up for, and dedicated primarily to, the public works project? If it is, the work is covered by RCW 39.12. If not, go to question 4.

4. Does the item require any assembly, cutting, modification or other fabrication by the supplier? If not, the work is not covered by RCW 39.12. If yes, go to question 5.

5. Is the prefabricated item intended for the public works project typically an inventory item which could reasonably be sold on the general market? If not, the work is covered by RCW 39.12. If yes, go to question 6.

6. Does the specific prefabricated item, generally defined as standard, have any unusual characteristics such as shape, type of material, strength requirements, finish, etc? If yes, the work is covered under RCW 39.12.

Any firm with questions regarding the policy, WSDOT's Predetermined List, or for determinations of covered and non-covered workers shall be directed to State L&I at (360) 902-5330.

INFORMATIONAL COPY ONLY - NOT FOR BIDDING

WSDOT's
Predetermined List for
Suppliers - Manufactures - Fabricator

Below is a list of potentially prefabricated items, originally furnished by WSDOT to Washington State Department of Labor and Industries, that may be considered non-standard and therefore covered by the prevailing wage law, RCW 39.12. Items marked with an X in the "YES" column should be considered to be non-standard and therefore covered by RCW 39.12. Items marked with an X in the "NO" column should be considered to be standard and therefore not covered. Of course, exceptions to this general list may occur, and in that case shall be evaluated according to the criteria described in State and L&I's policy statement.

	ITEM DESCRIPTION	YES	NO
1.	Metal rectangular frames, solid metal covers, herringbone grates, and bi-directional vaned grates for Catch Basin Types 1, 1L, 1P, and 2 and Concrete Inlets. See Std. Plans		X
2.	Metal circular frames (rings) and covers, circular grates, and prefabricated ladders for Manhole Types 1, 2, and 3, Drywell Types 1, 2, and 3 and Catch Basin Type 2. See Std. Plans		X
3.	Prefabricated steel grate supports and welded grates, metal frames and dual vaned grates, and Type 1, 2, and 3 structural tubing grates for Drop Inlets. See Std. Plans.		X
4.	Concrete Pipe - Plain Concrete pipe and reinforced concrete pipe Class 2 to 5 sizes smaller than 60 inch diameter.		X
5.	Concrete Pipe - Plain Concrete pipe and reinforced concrete pipe Class 2 to 5 sizes larger than 60 inch diameter.		X
6.	Corrugated Steel Pipe - Steel lock seam corrugated pipe for culverts and storm sewers, sizes 30 inch to 120 inches in diameter. May also be treated, 1 thru 5.		X
7.	Corrugated Aluminum Pipe - Aluminum lock seam corrugated pipe for culverts and storm sewers, sizes 30 inch to 120 inches in diameter. May also be treated, #5.		X

INFORMATIONAL COPY ONLY - NOT FOR BIDDING

	ITEM DESCRIPTION	YES	NO
8.	Anchor Bolts & Nuts - Anchor Bolts and Nuts, for mounting sign structures, luminaries and other items, shall be made from commercial bolt stock. See Contract Plans and Std. Plans for size and material type.		X
9.	Aluminum Pedestrian Handrail - Pedestrian handrail conforming to the type and material specifications set forth in the contract plans. Welding of aluminum shall be in accordance with Section 9-28.14(3).	X	
10.	Major Structural Steel Fabrication - Fabrication of major steel items such as trusses, beams, girders, etc., for bridges.	X	
11.	Minor Structural Steel Fabrication - Fabrication of minor steel Items such as special hangers, brackets, access doors for structures, access ladders for irrigation boxes, bridge expansion joint systems, etc., involving welding, cutting, punching and/or boring of holes. See Contact Plans for item description and shop drawings.	X	
12.	Aluminum Bridge Railing Type BP - Metal bridge railing conforming to the type and material specifications set forth in the Contract Plans. Welding of aluminum shall be in accordance with Section 9-28.14(3).		X
13.	Concrete Piling--Precast-Prestressed concrete piling for use as 55 and 70 ton concrete piling. Concrete to conform to Section 9-19.1 of Std. Spec..	X	
14.	Precast Manhole Types 1, 2, and 3 with cones, adjustment sections and flat top slabs. See Std. Plans.		X
15.	Precast Drywell Types 1, 2, and with cones and adjustment Sections. See Std. Plans.		X
16.	Precast Catch Basin - Catch Basin type 1, 1L, 1P, and 2 With adjustment sections. See Std. Plans.		X

INFORMATIONAL COPY ONLY - NOT FOR BIDDING

ITEM DESCRIPTION	YES	NO
17. Precast Concrete Inlet - with adjustment sections, See Std. Plans		X
18. Precast Drop Inlet Type 1 and 2 with metal grate supports. See Std. Plans.		X
19. Precast Grate Inlet Type 2 with extension and top units. See Std. Plans		X
20. Metal frames, vaned grates, and hoods for Combination Inlets. See Std. Plans		X
21. Precast Concrete Utility Vaults - Precast Concrete utility vaults of various sizes. Used for in ground storage of utility facilities and controls. See Contract Plans for size and construction requirements. Shop drawings are to be provided for approval prior to casting		X
22. Vault Risers - For use with Valve Vaults and Utilities Vaults.		X
23. Valve Vault - For use with underground utilities. See Contract Plans for details.		X
24. Precast Concrete Barrier - Precast Concrete Barrier for use as new barrier or may also be used as Temporary Concrete Barrier. Only new state approved barrier may be used as permanent barrier.		X
25. Reinforced Earth Wall Panels – Reinforced Earth Wall Panels in size and shape as shown in the Plans. Fabrication plant has annual approval for methods and materials to be used. See Shop Drawing. Fabrication at other locations may be approved, after facilities inspection, contact HQ. Lab.	X	
26. Precast Concrete Walls - Precast Concrete Walls - tilt-up wall panel in size and shape as shown in Plans. Fabrication plant has annual approval for methods and materials to be used	X	

INFORMATIONAL COPY ONLY - NOT FOR BIDDING

	ITEM DESCRIPTION	YES	NO
27.	Precast Railroad Crossings - Concrete Crossing Structure Slabs.	X	
28.	12, 18 and 26 inch Standard Precast Prestressed Girder -- Standard Precast Prestressed Girder for use in structures. Fabricator plant has annual approval of methods and materials to be used. Shop Drawing to be provided for approval prior to casting girders. See Std. Spec. Section 6-02.3(25)A	X	
29.	Prestressed Concrete Girder Series 4-14 - Prestressed Concrete Girders for use in structures. Fabricator plant has annual approval of methods and materials to be used. Shop Drawing to be provided for approval prior to casting girders. See Std. Spec. Section 6-02.3(25)A .	X	
30.	Prestressed Tri-Beam Girder - Prestressed Tri-Beam Girders for use in structures. Fabricator plant has annual approval of methods and materials to be used. Shop Drawing to be provided for approval prior to casting girders. See Std. Spec. Section 6-02.3(25)A	X	
31.	Prestressed Precast Hollow-Core Slab -- Precast Prestressed Hollow-core slab for use in structures. Fabricator plant has annual approval of methods and materials to be used. Shop Drawing to be provided for approval prior to casting girders. See Std. Spec. Section 6-02.3(25)A.	X	
32.	Prestressed-Bulb Tee Girder - Bulb Tee Prestressed Girder for use in structures. Fabricator plant has annual approval of methods and materials to be used. Shop Drawing to be provided for approval prior to casting girders. See Std. Spec. Section 6-02.3(25)A	X	
33.	Monument Case and Cover See Std. Plan.		X

INFORMATIONAL COPY ONLY - NOT FOR BIDDING

	ITEM DESCRIPTION	YES	NO
34.	Cantilever Sign Structure - Cantilever Sign Structure fabricated from steel tubing meeting AASHTO-M-183. See Std. Plans, and Contract Plans for details. The steel structure shall be galvanized after fabrication in accordance with AASHTO-M-111.	X	
35.	Mono-tube Sign Structures - Mono-tube Sign Bridge fabricated to details shown in the Plans. Shop drawings for approval are required prior to fabrication.	X	
36.	Steel Sign Bridges - Steel Sign Bridges fabricated from steel tubing meeting AASHTO-M-138 for Aluminum Alloys. See Std. Plans, and Contract Plans for details. The steel structure shall be galvanized after fabrication in accordance with AASHTO-M-111.	X	
37.	Steel Sign Post - Fabricated Steel Sign Posts as detailed in Std Plans. Shop drawings for approval are to be provided prior to fabrication		X
38.	Light Standard-Prestressed - Spun, prestressed, hollow concrete poles.	X	
39.	Light Standards - Lighting Standards for use on highway illumination systems, poles to be fabricated to conform with methods and materials as specified on Std. Plans. See Specia Provisions for pre-approved drawings.	X	
40.	Traffic Signal Standards - Traffic Signal Standards for use on highway and/or street signal systems. Standards to be fabricated to conform with methods and material as specified on Std. Plans. See Special Provisions for pre-approved drawings	X	
41.	Precast Concrete Sloped Mountable Curb (Single and DualFaced) See Std. Plans.		X

INFORMATIONAL COPY ONLY - NOT FOR BIDDING

	ITEM DESCRIPTION	YES	NO
42.	Traffic Signs - Prior to approval of a Fabricator of Traffic Signs, the sources of the following materials must be submitted and approved for reflective sheeting, legend material, and aluminum sheeting. **NOTE:** *** Fabrication inspection required. Only signs tagged "Fabrication Approved" by WSDOT Sign Fabrication Inspector to be installed	X	X
		Custom Message	Std Signing Message
43.	Cutting & bending reinforcing steel		X
44.	Guardrail components	X	X
		Custom End Sec	Standard Sec
45.	Aggregates/Concrete mixes	Covered by WAC 296-127-018	
46.	Asphalt	Covered by WAC 296-127-018	
47.	Fiber fabrics		X
48.	Electrical wiring/components		X
49.	treated or untreated timber pile		X
50.	Girder pads (elastomeric bearing)	X	
51.	Standard Dimension lumber		X
52.	Irrigation components		X

INFORMATIONAL COPY ONLY - NOT FOR BIDDING

ITEM DESCRIPTION	YES	NO
53. Fencing materials		X
54. Guide Posts		X
55. Traffic Buttons		X
56. Epoxy		X
57. Cribbing		X
58. Water distribution materials		X
59. Steel "H" piles		X
60. Steel pipe for concrete pile casings		X
61. Steel pile tips, standard		X
62. Steel pile tips, custom	X	

Prefabricated items specifically produced for public works projects that are prefabricated in a county other than the county wherein the public works project is to be completed, the wage for the offsite prefabrication shall be the applicable prevailing wage for the county in which the actual prefabrication takes place.

It is the manufacturer of the prefabricated product to verify that the correct county wage rates are applied to work they perform.

See RCW 39.12.010
(The definition of "locality" in RCW 39.12.010(2) contains the phrase "wherein the physical work is being performed." The department interprets this phrase to mean the actual work site.

INFORMATIONAL COPY ONLY - NOT FOR BIDDING

WSDOT's List of State Occupations not applicable to Heavy and Highway Construction Projects

This project is subject to the state hourly minimum rates for wages and fringe benefits in the contract provisions, as provided by the state Department of Labor and Industries.
The following list of occupations, is comprised of those occupations that are not normally used in the construction of heavy and highway projects.
When considering job classifications for use and / or payment when bidding on, or building heavy and highway construction projects for, or administered by WSDOT, these Occupations will be excepted from the included "Washington State Prevailing Wage Rates For Public Work Contracts" documents.

- Building Service Employees
- Electrical Fixture Maintenance Workers
- Electricians - Motor Shop
- Heating Equipment Mechanics
- Industrial Engine and Machine Mechanics
- Industrial Power Vacuum Cleaners
- Inspection, Cleaning, Sealing of Water Systems by Remote Control
- Laborers - Underground Sewer & Water
- Machinists (Hydroelectric Site Work)
- Modular Buildings
- Playground & Park Equipment Installers
- Power Equipment Operators - Underground Sewer & Water
- Residential *** ALL ASSOCIATED RATES ***
- Sign Makers and Installers (Non-Electrical)
- Sign Makers and Installers (Electrical)
- Stage Rigging Mechanics (Non Structural)

The following occupations may be used only as outlined in the preceding text concerning "WSDOT's list for Suppliers - Manufacturers - Fabricators"

- Fabricated Precast Concrete Products
- Metal Fabrication (In Shop)

Definitions for the Scope of Work for prevailing wages may be found at the Washington State Department of Labor and Industries web site and in WAC Chapter 296-127.

INFORMATIONAL COPY ONLY - NOT FOR BIDDING

Washington State Department of Labor and Industries
Policy Statements
(Regarding Production and Delivery of Gravel, Concrete, Asphalt, etc.)

WAC 296-127-018 Agency filings affecting this section

Coverage and exemptions of workers involved in the production and delivery of gravel, concrete, asphalt, or similar materials.

(1) The materials covered under this section include but are not limited to: Sand, gravel, crushed rock, concrete, asphalt, or other similar materials.

(2) All workers, regardless of by whom employed, are subject to the provisions of chapter 39.12 RCW when they perform any or all of the following functions:

(a) They deliver or discharge any of the above-listed materials to a public works project site:

(i) At one or more point(s) directly upon the location where the material will be incorporated into the project; or

(ii) At multiple points at the project; or

(iii) Adjacent to the location and coordinated with the incorporation of those materials.

(b) They wait at or near a public works project site to perform any tasks subject to this section of the rule.

(c) They remove any materials from a public works construction site pursuant to contract requirements or specifications (e.g., excavated materials, materials from demolished structures, clean-up materials, etc.).

(d) They work in a materials production facility (e.g., batch plant, borrow pit, rock quarry, etc.,) which is established for a public works project for the specific, but not necessarily exclusive, purpose of supplying materials for the project.

(e) They deliver concrete to a public works site regardless of the method of incorporation.

(f) They assist or participate in the incorporation of any materials into the public works project.

INFORMATIONAL COPY ONLY - NOT FOR BIDDING

(3) All travel time that relates to the work covered under subsection (2) of this section requires the payment of prevailing wages. Travel time includes time spent waiting to load, loading, transporting, waiting to unload, and delivering materials. Travel time would include all time spent in travel in support of a public works project whether the vehicle is empty or full. For example, travel time spent returning to a supply source to obtain another load of material for use on a public works site or returning to the public works site to obtain another load of excavated material is time spent in travel that is subject to prevailing wage. Travel to a supply source, including travel from a public works site, to obtain materials for use on a private project would not be travel subject to the prevailing wage.

(4) Workers are not subject to the provisions of chapter 39.12 RCW when they deliver materials to a stockpile.

(a) A "stockpile" is defined as materials delivered to a pile located away from the site of incorporation such that the stockpiled materials must be physically moved from the stockpile and transported to another location on the project site in order to be incorporated into the project.

(b) A stockpile does not include any of the functions described in subsection (2)(a) through (f) of this section; nor does a stockpile include materials delivered or distributed to multiple locations upon the project site; nor does a stockpile include materials dumped at the place of incorporation, or adjacent to the location and coordinated with the incorporation.

(5) The applicable prevailing wage rate shall be determined by the locality in which the work is performed. Workers subject to subsection (2)(d) of this section, who produce such materials at an off-site facility shall be paid the applicable prevailing wage rates for the county in which the off-site facility is located. Workers subject to subsection (2) of this section, who deliver such materials to a public works project site shall be paid the applicable prevailing wage rates for the county in which the public works project is located.

[Statutory Authority: Chapter 39.12 RCW, RCW 43.22.051 and 43.22.270. 08-24-101, § 296-127-018, filed 12/2/08, effective 1/2/09. Statutory Authority: Chapters 39.04 and 39.12 RCW and RCW 43.22.270. 92-01-104 and 92-08-101, § 296-127-018, filed 12/18/91 and 4/1/92, effective 8/31/92.]

INFORMATIONAL COPY ONLY - NOT FOR BIDDING

INFORMATIONAL COPY ONLY - NOT FOR BIDDING

General Decision Number: WA140001 08/01/2014 WA1

Superseded General Decision Number: WA20130001

State: Washington

Construction Type: Highway

Counties: Washington Statewide.

HIGHWAY (Excludes D.O.E. Hanford Site in Benton and Franklin Counties)

Modification Number	Publication Date
0	01/03/2014
1	01/17/2014
2	01/24/2014
3	02/07/2014
4	02/21/2014
5	03/14/2014
6	04/25/2014
7	05/23/2014
8	06/06/2014
9	06/13/2014
10	06/20/2014
11	07/04/2014
12	07/11/2014
13	07/18/2014
14	07/25/2014
15	08/01/2014

CARP0001-008 06/01/2013

	Rates	Fringes
Carpenters:		
COLUMBIA RIVER AREA - ADAMS, BENTON, COLUMBIA, DOUGLAS (EAST OF THE 120TH MERIDIAN), FERRY, FRANKLIN, GRANT, OKANOGAN (EAST OF THE 120TH MERIDIAN) AND WALLA WALLA COUNTIES		
GROUP 1	$ 30.66	12.87
GROUP 2	$ 31.56	12.87
GROUP 3	$ 31.64	12.87
GROUP 4	$ 31.64	12.87
GROUP 5	$ 62.58	12.87
GROUP 6	$ 30.29	12.87
GROUP 7	$ 31.29	12.87
GROUP 8	$ 28.54	12.87
GROUP 9	$ 30.29	12.87

INFORMATIONAL COPY ONLY - NOT FOR BIDDING

SPOKANE AREA: ASOTIN, GARFIELD, LINCOLN, PEND OREILLE, SPOKANE, STEVENS AND WHITMAN COUNTIES

GROUP 1:.....	$ 30.66	12.87
GROUP 2:.....	$ 31.56	12.87
GROUP 3:.....	$ 31.64	12.87
GROUP 4:.....	$ 31.64	12.87
GROUP 5:.....	$ 70.78	12.87
GROUP 6:.....	$ 32.64	12.87
GROUP 7.....	$ 35.39	12.87
GROUP 8.....	$ 34.39	12.87
GROUP 9.....	$ 34.39	12.87

CARPENTER & DIVER CLASSIFICATIONS:

GROUP 1: Carpenter
GROUP 2: Millwright, machine erector
GROUP 3: Piledriver - includes driving, pulling, cutting, placing collars, setting, welding, or creosote treated material, on all piling
GROUP 4: Bridge carpenters
GROUP 5: Diver Wet
GROUP 6: Diver Tender, Manifold Operator, ROV Operator
GROUP 7: Diver Standby, Bell/Vehicle or Submersible operator Not Under Pressure
GROUP 8: Assistant Tender, ROV Tender/Technician
GROUP 9: Manifold Operator-Mixed Gas

ZONE PAY:

ZONE 1	0-40 MILES	FREE
ZONE 2	41-65 MILES	$2.25/PER HOUR
ZONE 3	66-100 MILES	$3.25/PER HOUR
ZONE 4	OVER 100 MILES	$4.75/PER HOUR

DISPATCH POINTS:

CARPENTERS/MILLWRIGHTS: PASCO (515 N Neel Street) or Main Post Office of established residence of employee (Whichever is closest to the worksite).

CARPENTERS/PILEDRIVER: SPOKANE (127 E. AUGUSTA AVE.) or Main Post Office of established residence of employee (Whichever is closest to the worksite).

CARPENTERS: WENATCHEE (27 N. CHELAN) or Main Post Office of established residence of employee (Whichever is closest to the worksite).

CARPENTERS: COEUR D' ALENE (1839 N. GOVERNMENT WAY) or Main Post Office of established residence of employee (Whichever is closest to the worksite).

CARPENTERS: MOSCOW (302 N. JACKSON) or Main Post Office of established residence of employee (Whichever is closest to the worksite).

INFORMATIONAL COPY ONLY - NOT FOR BIDDING

DEPTH PAY FOR DIVERS BELOW WATER SURFACE:
50-100 feet $2.00 per foot
101-150 feet $3.00 per foot
151-220 feet $4.00 per foot
221 feet and deeper $5.00 per foot

PREMIUM PAY FOR DIVING IN ENCLOSURES WITH NO VERTICAL ASCENT:
0-25 feet Free
26-300 feet $1.00 per Foot

SATURATION DIVING:
The standby rate applies until saturation starts. The saturation diving rate applies when divers are under pressure continuously until work task and decompression are complete. the diver rate shall be paid for all saturation hours.

WORK IN COMBINATION OF CLASSIFICATIONS:
Employees working in any combination of classifications within the diving crew (except dive supervisor) in a shift are paid in the classification with the highest rate for that shift.

HAZMAT PROJECTS:

Anyone working on a HAZMAT job (task), where HAZMAT certification is required, shall be compensated at a premium, in addition to the classification working in as follows:

LEVEL D + $.25 per hour - This is the lowest level of protection. No respirator is used and skin protection is minimal.

LEVEL C + $.50 per hour - This level uses an air purifying respirator or additional protective clothing.

LEVEL B + $.75 per hour - Uses same respirator protection as Level A. Supplied air line is provided in conjunction with a chemical "splash suit".

LEVEL A +$1.00 per hour - This level utilizes a fully encapsulated suit with a self-contained breathing apparatus or a supplied air line.

INFORMATIONAL COPY ONLY - NOT FOR BIDDING

CARP0003-006 10/01/2011

SOUTHWEST WASHINGTON: CLARK, COWLITZ, KLICKITAT, LEWIS(Piledriver only), PACIFIC (South of a straight line made by extending the north boundary line of Wahkiakum County west to Willapa Bay to the Pacific Ocean), SKAMANIA AND WAHKIAKUM COUNTIES and INCLUDES THE ENTIRE PENINSULA WEST OF WILLAPA BAY

SEE ZONE DESCRIPTION FOR CITIES BASE POINTS

ZONE 1:

	Rates	Fringes
Carpenters:		
CARPENTERS	$ 32.04	14.18
DIVERS TENDERS	$ 36.34	14.18
DIVERS	$ 77.08	14.18
DRYWALL	$ 27.56	14.18
MILLWRIGHTS	$ 32.19	14.18
PILEDRIVERS	$ 33.04	14.18

DEPTH PAY:
50 TO 100 FEET $1.00 PER FOOT OVER 50 FEET
101 TO 150 FEET $1.50 PER FOOT OVER 101 FEET
151 TO 200 FEET $2.00 PER FOOT OVER 151 FEET

Zone Differential (Add up Zone 1 rates):
Zone 2 - $0.85
Zone 3 - 1.25
Zone 4 - 1.70
Zone 5 - 2.00
Zone 6 - 3.00

BASEPOINTS: ASTORIA, LONGVIEW, PORTLAND, THE DALLES, AND VANCOUVER, (NOTE: All dispatches for Washington State Counties: Cowlitz, Wahkiakum and Pacific shall be from Longview Local #1707 and mileage shall be computed from that point.)

ZONE 1: Projects located within 30 miles of the respective city hall of the above mentioned cities
ZONE 2: Projects located more than 30 miles and less than 40 miles of the respective city of the above mentioned cities
ZONE 3: Projects located more than 40 miles and less than 50 miles of the respective city of the above mentioned cities
ZONE 4: Projects located more than 50 miles and less than 60 miles of the respective city of the above mentioned cities.
ZONE 5: Projects located more than 60 miles and less than 70 miles of the respective city of the above mentioned cities
ZONE 6: Projects located more than 70 miles of the respected city of the above mentioned cities

---

INFORMATIONAL COPY ONLY - NOT FOR BIDDING

CARP0770-003 07/01/2012

	Rates	Fringes
Carpenters:		
CENTRAL WASHINGTON: CHELAN, DOUGLAS (WEST OF THE 120TH MERIDIAN), KITTITAS, OKANOGAN (WEST OF THE 120TH MERIDIAN) AND YAKIMA COUNTIES		
CARPENTERS ON CREOSOTE MATERIAL	$ 25.93	12.60
CARPENTERS	$ 25.83	12.60
DIVERS TENDER	$ 39.15	12.60
DIVERS	$ 87.20	12.60
MILLWRIGHT AND MACHINE ERECTORS	$ 37.07	12.60
PILEDRIVER, DRIVING, PULLING, CUTTING, PLACING COLLARS, SETTING, WELDING OR CRESOTE TREATED MATERIAL, ALL PILING	$ 36.22	12.60

(HOURLY ZONE PAY: WESTERN AND CENTRAL WASHINGTON - ALL CLASSIFICATIONS EXCEPT MILLWRIGHTS AND PILEDRIVERS

Hourly Zone Pay shall be paid on jobs located outside of the free zone computed from the city center of the following listed cities:

Seattle	Olympia	Bellingham
Auburn	Bremerton	Anacortes
Renton	Shelton	Yakima
Aberdeen-Hoquiam	Tacoma	Wenatchee
Ellensburg	Everett	Port Angeles
Centralia	Mount Vernon	Sunnyside
Chelan	Pt. Townsend	

Zone Pay:

0 -25 radius miles	Free
26-35 radius miles	$1.00/hour
36-45 radius miles	$1.15/hour
46-55 radius miles	$1.35/hour
Over 55 radius miles	$1.55/hour

(HOURLY ZONE PAY: WESTERN AND CENTRAL WASHINGTON - MILLWRIGHT AND PILEDRIVER ONLY)

Hourly Zone Pay shall be computed from Seattle Union Hall, Tacoma City center, and Everett City center

Zone Pay:

0 -25 radius miles	Free
26-45 radius miles	$ .70/hour
Over 45 radius miles	$1.50/hour

INFORMATIONAL COPY ONLY - NOT FOR BIDDING

CARP0770-006 07/07/2012

	Rates	Fringes
Carpenters:		
WESTERN WASHINGTON:		
CLALLAM, GRAYS HARBOR, ISLAND, JEFFERSON, KING, KITSAP, LEWIS (excludes piledrivers only), MASON, PACIFIC (North of a straight line made by extending the north boundary line of Wahkiakum County west to the Pacific Ocean), PIERCE, SAN JUAN, SKAGIT, SNOHOMISH, THURSTON AND WHATCOM COUNTIES		
BRIDGE CARPENTERS	$ 35.39	13.60
CARPENTERS ON CREOSOTE MATERIAL	$ 35.49	13.60
CARPENTERS	$ 35.39	13.60
DIVERS TENDER	$ 39.15	13.60
DIVERS	$ 87.20	13.60
MILLWRIGHT AND MACHINE ERECTORS	$ 36.39	13.60
PILEDRIVER, DRIVING, PULLING, CUTTING, PLACING COLLARS, SETTING, WELDING OR CRESOTE TREATED MATERIAL, ALL PILING	$ 35.59	13.60

(HOURLY ZONE PAY: WESTERN AND CENTRAL WASHINGTON - ALL CLASSIFICATIONS EXCEPT MILLWRIGHTS AND PILEDRIVERS

Hourly Zone Pay shall be paid on jobs located outside of the free zone computed from the city center of the following listed cities:

Seattle	Olympia	Bellingham
Auburn	Bremerton	Anacortes
Renton	Shelton	Yakima
Aberdeen-Hoquiam	Tacoma	Wenatchee
Ellensburg	Everett	Port Angeles
Centralia	Mount Vernon	Sunnyside
Chelan	Pt. Townsend	

Zone Pay:

0 -25 radius miles	Free
26-35 radius miles	$1.00/hour
36-45 radius miles	$1.15/hour
46-55 radius miles	$1.35/hour
Over 55 radius miles	$1.55/hour

(HOURLY ZONE PAY: WESTERN AND CENTRAL WASHINGTON - MILLWRIGHT AND PILEDRIVER ONLY)

Hourly Zone Pay shall be computed from Seattle Union Hall, Tacoma City center, and Everett City center

Zone Pay:

0 -25 radius miles	Free
26-45 radius miles	$ .70/hour
Over 45 radius miles	$1.50/hour

INFORMATIONAL COPY ONLY - NOT FOR BIDDING

ELEC0046-001 02/04/2013

CALLAM, JEFFERSON, KING AND KITSAP COUNTIES

	Rates	Fringes
CABLE SPLICER	$ 46.87	3%+15.96
ELECTRICIAN	$ 42.61	3%+15.96

ELEC0048-003 01/01/2014

CLARK, KLICKITAT AND SKAMANIA COUNTIES

	Rates	Fringes
CABLE SPLICER	$ 42.63	19.11
ELECTRICIAN	$ 38.75	19.11

HOURLY ZONE PAY:

Hourly Zone Pay shall be paid on jobs located outside of the free zone computed from the city center of the following listed cities:

Portland, The Dalles, Hood River, Tillamook, Seaside and Astoria

Zone Pay:
Zone 1: 31-50 miles $1.50/hour
Zone 2: 51-70 miles $3.50/hour
Zone 3: 71-90 miles $5.50/hour
Zone 4: Beyond 90 miles $9.00/hour

*These are not miles driven. Zones are based on Delorrne Street Atlas USA 2006 plus.

ELEC0048-029 01/01/2014

COWLITZ AND WAHKIAKUM COUNTY

	Rates	Fringes
CABLE SPLICER	$ 42.63	19.11
ELECTRICIAN	$ 38.75	19.11

ELEC0073-001 07/01/2013

ADAMS, FERRY, LINCOLN, PEND OREILLE, SPOKANE, STEVENS, WHITMAN COUNTIES

	Rates	Fringes
CABLE SPLICER	$ 31.98	16.15
ELECTRICIAN	$ 29.07	16.15

INFORMATIONAL COPY ONLY - NOT FOR BIDDING

ELEC0076-002 09/01/2013

GRAYS HARBOR, LEWIS, MASON, PACIFIC, PIERCE, AND THURSTON COUNTIES

	Rates	Fringes
CABLE SPLICER	$ 37.71	22.47
ELECTRICIAN	$ 34.28	22.47

ELEC0112-005 06/01/2014

ASOTIN, BENTON, COLUMBIA, FRANKLIN, GARFIELD, KITTITAS, WALLA WALLA, YAKIMA COUNTIES

	Rates	Fringes
CABLE SPLICER	$ 39.95	17.88
ELECTRICIAN	$ 38.05	17.82

ELEC0191-003 06/01/2013

ISLAND, SAN JUAN, SNOHOMISH, SKAGIT AND WHATCOM COUNTIES

	Rates	Fringes
CABLE SPLICER	$ 42.91	17.39
ELECTRICIAN	$ 39.01	17.39

ELEC0191-004 07/01/2013

CHELAN, DOUGLAS, GRANT AND OKANOGAN COUNTIES

	Rates	Fringes
CABLE SPLICER	$ 39.50	17.30
ELECTRICIAN	$ 35.91	17.30

INFORMATIONAL COPY ONLY - NOT FOR BIDDING

ENGI0302-003 06/01/2014

CHELAN (WEST OF THE 120TH MERIDIAN), CLALLAM, DOUGLAS (WEST OF THE 120TH MERIDIAN), GRAYS HARBOR, ISLAND, JEFFERSON, KING, KITSAP, KITTITAS, MASON, OKANOGAN (WEST OF THE 120TH MERIDIAN), SAN JUNA, SKAGIT, SNOHOMISH, WHATCOM AND YAKIMA (WEST OF THE 120TH MERIDIAN) COUNTIES

PROJECTS: CATEGORY A PROJECTS (EXCLUDES CATEGORY B PROJECTS, AS SHOWN BELOW)

Zone 1 (0-25 radius miles):

	Rates	Fringes
Power equipment operators:		
Group 1A	$ 38.39	17.39
Group 1AA	$ 38.96	17.39
Group 1AAA	$ 39.52	17.39
Group 1	$ 37.84	17.39
Group 2	$ 37.35	17.39
Group 3	$ 36.93	17.39
Group 4	$ 34.57	17.39

Zone Differential (Add to Zone 1 rates):
Zone 2 (26-45 radius miles) - $1.00
Zone 3 (Over 45 radius miles) - $1.30

BASEPOINTS: Aberdeen, Bellingham, Bremerton, Everett, Kent, Mount Vernon, Port Angeles, Port Townsend, Seattle, Shelton, Wenatchee, Yakima

POWER EQUIPMENT OPERATORS CLASSIFICATIONS

GROUP 1AAA - Cranes-over 300 tons, or 300 ft of boom (including jib with attachments)

GROUP 1AA - Cranes 200 to 300 tons, or 250 ft of boom (including jib with attachments); Tower crane over 175 ft in height, base to boom

GROUP 1A - Cranes, 100 tons thru 199 tons, or 150 ft of boom (including jib with attachments); Crane-overhead, bridge type, 100 tons and over; Tower crane up to 175 ft in height base to boom; Loaders-overhead, 8 yards and over; Shovels, excavator, backhoes-6 yards and over with attachments

GROUP 1 - Cableway; Cranes 45 tons thru 99 tons, under 150 ft of boom (including jib with attachments); Crane-overhead, bridge type, 45 tons thru 99 tons; Derricks on building work; Excavator, shovel, backhoes over 3 yards and under 6 yards; Hard tail end dump articulating off-road equipment 45 yards and over; Loader- overhead 6 yards to, but not including 8 yards; Mucking machine, mole, tunnel, drill and/or shield; Quad 9, HD 41, D-10; Remote control operator on rubber tired earth moving equipment; Rollagon; Scrapers-self propelled 45 yards and over; Slipform pavers; Transporters, all truck or track type

INFORMATIONAL COPY ONLY - NOT FOR BIDDING

GROUP 2 - Barrier machine (zipper); Batch Plant Operaor-Concrete; Bump Cutter; Cranes, 20 tons thru 44 tons with attachments; Crane-overhead, bridge type-20 tons through 44 tons; Chipper; Concrete Pump-truck mount with boom attachment; Crusher; Deck Engineer/Deck Winches (power); Drilling machine; Excavator, shovel, backhoe-3yards and under; Finishing Machine, Bidwell, Gamaco and similar equipment; Guardrail punch; Horizontal/directional drill operator; Loaders-overhead under 6 yards; Loaders-plant feed; Locomotives-all; Mechanics-all; Mixers-asphalt plant; Motor patrol graders-finishing; Piledriver (other than crane mount); Roto-mill,roto-grinder; Screedman, spreader, topside operator-Blaw Knox, Cedar Rapids, Jaeger, Caterpillar, Barbar Green; Scraper-self propelled, hard tail end dump, articulating off-road equipment-under 45 yards; Subgrade trimmer; Tractors, backhoes-over 75 hp; Transfer material service machine-shuttle buggy, blaw knox-roadtec; Truck crane oiler/driver-100 tons and over; Truck Mount portable conveyor; Yo Yo Pay dozer

GROUP 3 - Conveyors; Cranes-thru 19 tons with attachments; A-frame crane over 10 tons; Drill oilers-auger type, truck or crane mount; Dozers-D-9 and under; Forklift-3000 lbs. and over with attachments; Horizontal/directional drill locator; Outside hoists-(elevators and manlifts), air tuggers, strato tower bucket elevators; Hydralifts/boom trucks over 10 tons; Loader-elevating type, belt; Motor patrol grader-nonfinishing; Plant oiler- asphalt, crusher; Pumps-concrete; Roller, plant mix or multi-lift materials; Saws-concrete; Scrpers-concrete and carry-all; Service engineer-equipment; Trenching machines; Truck Crane Oiler/Driver under 100 tons; Tractors, backhoe 75 hp and under

GROUP 4 - Assistant Engineer; Bobcat; Brooms; Compressor; Concrete finish mahine-laser screed; Cranes-A frame-10 tons and under; Elevator and Manlift-permanent or shaft type; Gradechecker, Stakehop; Forklifts under 3000 lbs. with attachments; Hydralifts/boom trucks, 10 tons and under; Oil distributors, blower distribution and mulch seeding operator; Pavement breaker; Posthole digger, mechanical; Power plant; Pumps, water; Rigger and Bellman; Roller-other than plant mix; Wheel Tractors, farmall type; Shotcrete/gunite equipment operator

INFORMATIONAL COPY ONLY - NOT FOR BIDDING

Category B Projects: 95% of the basic hourly reate for each group plus full fringe benefits applicable to category A projects shall apply to the following projects. A Reduced rates may be paid on the following:

1. Projects involving work on structures such as buildings and bridges whose total value is less than $1.5 million excluding mechanical, electrical, and utility portions of the contract.

2. Projects of less than $1 million where no building is involved. Surfacing and paving included, but utilities excluded.

3. Marine projects (docks, wharfs, etc.) less than $150,000.

HANDLING OF HAZARDOUS WASTE MATERIALS:

Personnel in all craft classifications subject to working inside a federally designated hazardous perimeter shall be elgible for compensation in accordance with the following group schedule relative to the level of hazardous waste as outlined in the specific hazardous waste project site safety plan.

H-1 Base wage rate when on a hazardous waste site when not outfitted with protective clothing

H-2 Class "C" Suit - Base wage rate plus $ .25 per hour.

H-3 Class "B" Suit - Base wage rate plus $ .50 per hour.

H-4 Class "A" Suit - Base wage rate plus $ .75 per hour.

Zone Differential (Add to Zone 1 rates):
Zone 2 (26-45 radius miles) - $ .70
Zone 3 (Over 45 radius miles) - $1.00

BASEPOINTS: Aberdeen, Bellingham, Bremerton, Everett, Kent, Mount Vernon, Port Angeles, Port Townsend, Seattle, Shelton, Wenatchee, Yakima

INFORMATIONAL COPY ONLY - NOT FOR BIDDING

POWER EQUIPMENT OPERATORS CLASSIFICATIONS

GROUP 1AAA - Cranes-over 300 tons, or 300 ft of boom (including jib with attachments)

GROUP 1AA - Cranes 200 to 300 tons, or 250 ft of boom (including jib with attachments); Tower crane over 175 ft in height, base to boom

GROUP 1A - Cranes, 100 tons thru 199 tons, or 150 ft of boom (including jib with attachments); Crane-overhead, bridge type, 100 tons and over; Tower crane up to 175 ft in height base to boom; Loaders-overhead, 8 yards and over; Shovels, excavator, backhoes-6 yards and over with attachments

GROUP 1 - Cableway; Cranes 45 tons thru 99 tons, under 150 ft of boom (including jib with attachments); Crane-overhead, bridge type, 45 tons thru 99 tons; Derricks on building work; Excavator, shovel, backhoes over 3 yards and under 6 yards; Hard tail end dump articulating off-road equipment 45 yards and over; Loader- overhead 6 yards to, but not including 8 yards; Mucking machine, mole, tunnel, drill and/or shield; Quad 9, HD 41, D-10; Remote control operator on rubber tired earth moving equipment; Rollagon; Scrapers-self propelled 45 yards and over; Slipform pavers; Transporters, all truck or track type

GROUP 2 - Barrier machine (zipper); Batch Plant Operaor-Concrete; Bump Cutter; Cranes, 20 tons thru 44 tons with attachments; Crane-overhead, bridge type-20 tons through 44 tons; Chipper; Concrete Pump-truck mount with boom attachment; Crusher; Deck Engineer/Deck Winches (power); Drilling machine; Excavator, shovel, backhoe-3 yards and under; Finishing Machine Bidwell, Gamaco and similar equipment; Guardrail punch; Horizontal/directional drill operator; Loaders-overhead under 6 yards; Loaders-plant feed; Locomotives-all; Mechanics-all; Mixers-asphalt plant; Motor patrol graders-finishing; Piledriver (other than crane mount); Roto-mill roto-grinder; Screedman, spreader, topside operator-Blaw Knox, Cedar Rapids, Jaeger, Caterpillar, Barbar Green; Scraper-self propelled, hard tail end dump, articulating off-road equipment-under 45 yards; Subgrade trimmer; Tractors, backhoes-over 75 hp; Transfer material service machine-shuttle buggy, blaw knox-roadtec; Truck crane oiler/driver-100 tons and over; Truck Mount portable conveyor; Yo Yo Pay dozer

INFORMATIONAL COPY ONLY - NOT FOR BIDDING

GROUP 3 - Conveyors; Cranes-thru 19 tons with attachments; A-frame crane over 10 tons; Drill oilers-auger type, truck or crane mount; Dozers-D-9 and under; Forklift-3000 lbs. and over with attachments; Horizontal/directional drill locator; Outside hoists-(elevators and manlifts), air tuggers, strato tower bucket elevators; Hydralifts/boom trucks over 10 tons; Loader-elevating type, belt; Motor patrol grader-nonfinishing; Plant oiler- asphalt, crusher; Pumps-concrete; Roller, plant mix or multi-lift materials; Saws-concrete; Scrpers-concrete and carry-all; Service engineer-equipment; Trenching machines; Truck Crane Oiler/Driver under 100 tons; Tractors, backhoe 75 hp and under

GROUP 4 - Assistant Engineer; Bobcat; Brooms; Compressor; Concrete finish mahine-laser screed; Cranes-A frame-10 tons and under; Elevator and Manlift-permanent or shaft type; Gradechecker, Stakehop; Forklifts under 3000 lbs. with attachments; Hydralifts/boom trucks, 10 tons and under; Oil distributors, blower distribution and mulch seeding operator; Pavement breaker; Posthole digger, mechanical; Power plant; Pumps, water; Rigger and Bellman; Roller-other than plant mix; Wheel Tractors, farmall type; Shotcrete/gunite equipment operator

CATEGORY B PROJECTS: 95% OF THE BASIC HOURLY RATE FOR EACH GROUP PLUS FULL FRINGE BENEFITS APPLICABLE TO CATEGORY A PROJECTS SHALL APPLY TO THE FOLLOWING PROJECTS. REDUCED RATES MAY BE PAID ON THE FOLLOWING:

1. Projects involving work on structures such as buildings and bridges whose total value is less than $1.5 million excluding mechanical, electrical, and utility portions of the contract.
2. Projects of less than $1 million where no building is involved. Surfacing and paving including, but utilities excluded.
3. Marine projects (docks, wharfs, ect.) less than $150,000.

HANDLING OF HAZARDOUS WASTE MATERIALS: Personnel in all craft classifications subject to working inside a federally designed hazardous perimeter shall be elgible for compensation in accordance with the following group schedule relative to the level of hazardous waste as outlined in the specific hazardous waste project site safety plan.

H-1 Base wage rate when on a hazardous waste site when not outfitted with protective clothing.
H-2 Class "C" Suit - Base wage rate plus $.25 per hour.
H-3 Class "B" Suit - Base wage rate plus $.50 per hour.
H-4 Class "A" Suit - Base wage rate plus $.75 per hour.

INFORMATIONAL COPY ONLY - NOT FOR BIDDING

ENGI0370-002 06/01/2013

ADAMS, ASOTIN, BENTON, CHELAN (EAST OF THE 120TH MERIDIAN), COLUMBIA, DOUGLAS (EAST OF THE 120TH MERIDIAN), FERRY, FRANKLIN, GARFIELD, GRANT, LINCOLN, OKANOGAN (EAST OF THE 120TH MERIDIAN), PEND OREILLE, SPOKANE, STEVENS, WALLA WALLA, WHITMAN AND YAKIMA (EAST OF THE 120TH MERIDIAN) COUNTIES

ZONE 1:

	Rates	Fringes
Power equipment operators:		
GROUP 1	$ 25.56	12.85
GROUP 2	$ 25.88	12.85
GROUP 3	$ 26.49	12.85
GROUP 4	$ 26.65	12.85
GROUP 5	$ 26.81	12.85
GROUP 6	$ 27.09	12.85
GROUP 7	$ 27.36	12.85
GROUP 8	$ 28.46	12.85

ZONE DIFFERENTIAL (Add to Zone 1 rate): Zone 2 - $2.00

Zone 1: Within 45 mile radius of Spokane, Pasco, Washington; Lewiston, Idaho

Zone 2: Outside 45 mile radius of Spokane, Pasco, Washington; Lewiston, Idaho

POWER EQUIPMENT OPERATORS CLASSIFICATIONS

GROUP 1: Bit Grinders; Bolt Threading Machine; Compressors (under 2000 CFM, gas, diesel, or electric power); Deck Hand; Fireman & Heater Tender; Hydro-seeder, Mulcher, Nozzleman; Oiler Driver, & Cable Tender, Mucking Machine; Pumpman; Rollers, all types on subgrade, including seal and chip coatings (farm type, Case, John Deere & similar, or Compacting Vibrator), except when pulled by Dozer with operable blade; Welding Machine; Crane Oiler-Driver (CLD required) & Cable Tender, Mucking Machine

INFORMATIONAL COPY ONLY - NOT FOR BIDDING

GROUP 2: A-frame Truck (single drum); Assistant Refrigeration Plant (under 1000 ton); Assistant Plant Operator, Fireman or Pugmixer (asphalt); Bagley or Stationary Scraper; Belt Finishing Machine; Blower Operator (cement); Cement Hog; Compressor (2000 CFM or over, 2 or more, gas diesel or electric power); Concrete Saw (multiple cut); Distributor Leverman; Ditch Witch or similar; Elevator Hoisting Materials; Dope Pots (power agitated); Fork Lift or Lumber Stacker, hydra-lift & similar; Gin Trucks (pipeline); Hoist, single drum; Loaders (bucket elevators and conveyors); Longitudinal Float; Mixer (portable-concrete); Pavement Breaker, Hydra-Hammer & similar; Power Broom; Railroad Ballast Regulation Operator (self-propelled); Railroad Power Tamper Operator (self-propelled); Railroad Tamper Jack Operator (self-propelled; Spray Curing Machine (concrete); Spreader Box (self-propelled); Straddle Buggy (Ross & similar on construction job only); Tractor (Farm type R/T with attachment, except Backhoe); Tugger Operator

GROUP 3: A-frame Truck (2 or more drums); Assistant Refrigeration Plant & Chiller Operator (over 1000 ton); Backfillers (Cleveland & similar); Batch Plant & Wet Mix Operator, single unit (concrete); Belt-Crete Conveyors with power pack or similar; Belt Loader (Kocal or similar); Bending Machine; Bob Cat (Skid Steer); Boring Machine (earth); Boring Machine (rock under 8 inch bit) (Quarry Master, Joy or similar); Bump Cutter (Wayne, Saginau or similar); Canal Lining Machine (concrete); Chipper (without crane); Cleaning & Doping Machine (pipeline); Deck Engineer; Elevating Belt-type Loader (Euclid, Barber Green & similar); Elevating Grader-type Loader (Dumor, Adams or similar); Generator Plant Engineers (diesel or electric); Gunnite Combination Mixer & Compressor; Locomotive Engineer; Mixermobile; Mucking Machine; Posthole Auger or Punch; Pump (grout or jet); Soil Stabilizer (P & H or similar); Spreader Machine; Dozer/Tractor (up to D-6 or equivalent) and Traxcavator; Traverse Finish Machine; Turnhead Operator

GROUP 4: Concrete Pumps (squeeze-crete, flow-crete, pump-crete, Whitman & similar); Curb Extruder (asphalt or concrete); Drills (churn, core, calyx or diamond); Equipment Serviceman; Greaser & Oiler; Hoist (2 or more drums or Tower Hoist); Loaders (overhead & front-end, under 4 yds. R/T); Refrigeration Plant Engineer (under 1000 ton); Rubber-tired Skidders (R/T with or without attachments); Surface Heater & Plant Machine; Trenching Machines (under 7 ft. depth capacity); Turnhead (with re-screening); Vacuum Drill (reverse circulation drill under 8 inch bit)

INFORMATIONAL COPY ONLY - NOT FOR BIDDING

GROUP 5: Backhoe (under 45,000 gw); Backhoe & Hoe Ram (under 3/4 yd.); Carrydeck & Boom Truck (under 25 tons); Cranes (25 tons & under), all attachments including clamshell, dragline; Derricks & Stifflegs (under 65 tons); Drilling Equipment(8 inch bit & over) (Robbins, reverse circulation & similar); Hoe Ram; Piledriving Engineers; Paving (dual drum); Railroad Track Liner Operaotr (self-propelled); Refrigeration Plant Engineer (1000 tons & over); Signalman (Whirleys, Highline Hammerheads or similar); Grade Checker

GROUP 6: Asphalt Plant Operator; Automatic Subgrader (Ditches & Trimmers)(Autograde, ABC, R.A. Hansen & similar on grade wire); Backhoe (45,000 gw and over to 110,000 gw); Backhoes & Hoe Ram (3/4 yd. to 3 yd.); Batch Plant (over 4 units); Batch & Wet Mix Operator (multiple units, 2 & incl. 4); Blade Operator (motor patrol & attachments); Cable Controller (dispatcher); Compactor (self-propelled with blade); Concrete Pump Boom Truck; Concrete Slip Form Paver; Cranes (over 25 tons, to and including 45 tons), all attachments including clamshell, dragline; Crusher, Grizzle & Screening Plant Operator; Dozer, 834 R/T & similar; Drill Doctor; Loader Operator (front-end & overhead, 4 yds. incl. 8 yds.); Multiple Dozer Units with single blade; Paving Machine (asphalt and concrete); Quad-Track or similar equipment; Rollerman (finishing asphalt pavement); Roto Mill (pavement grinder); Scrapers, all, rubber-tired; Screed Operator; Shovel(under 3 yds.); Trenching Machines (7 ft. depth & over); Tug Boat Operator Vactor guzzler, super sucker; Lime Batch Tank Operator (REcycle Train); Lime Brain Operator (Recycle Train); Mobile Crusher Operator (Recycle Train)

GROUP 7: Backhoe (over 110,000 gw); Backhoes & Hoe Ram (3 yds & over); Blade (finish & bluetop) Automatic, CMI, ABC, Finish Athey & Huber & similar when used as automatic; Cableway Operators; Concrete Cleaning/Decontamination machine operator; Cranes (over 45 tons to but not including 85 tons), all attachments including clamshell and dragine; Derricks & Stiffleys (65 tons & over); Elevating Belt (Holland type); Heavy equipment robotics operator; Loader (360 degrees revolving Koehring Scooper or similar); Loaders (overhead & front-end, over 8 yds. to 10 yds.); Rubber-tired Scrapers (multiple engine with three or more scrapers); Shovels (3 yds. & over); Whirleys & Hammerheads, ALL; H.D. Mechanic; H.D. Welder; Hydraulic Platform Trailers (Goldhofer, Shaurerly andSimilar); Ultra High Pressure Wateriet Cutting Tool System Operator (30,000 psi); Vacuum Blasting Machine Operator

INFORMATIONAL COPY ONLY - NOT FOR BIDDING

GROUP 8: Cranes (85 tons and over, and all climbing, overhead,rail and tower), all attachments including clamshell, dragline; Loaders (overhead and front-end, 10 yards and over); Helicopter Pilot

BOOM PAY: (All Cranes, Including Tower)
180 ft to 250 ft $ .50 over scale
Over 250 ft $ .80 over scale

NOTE:
In computing the length of the boom on Tower Cranes, they shall be measured from the base of the Tower to the point of the boom.

HAZMAT:
Anyone working on HAZMAT jobs, working with supplied air shall receive $1.00 an hour above classification.

ENGI0612-012 06/01/2013

LEWIS,PIERCE, PACIFIC (portion lying north of a parallel line extending west from the northern boundary of Wahkaikum County to the sea) AND THURSTON COUNTIES

ON PROJECTS DESCRIBED IN FOOTNOTE A BELOW, THE RATE FOR EACH GROUP SHALL BE 90% OF THE BASE RATE PLUS FULL FRINGE BENEFITS. ON ALL OTHER WORK, THE FOLLOWING RATES APPLY.

Zone 1 (0-25 radius miles):

	Rates	Fringes
Power equipment operators:		
GROUP 1A	$ 37.39	16.65
GROUP 1AA	$ 37.96	16.65
GROUP 1AAA	$ 38.52	16.65
GROUP 1	$ 36.84	16.65
GROUP 2	$ 36.35	16.65
GROUP 3	$ 35.93	16.65
GROUP 4	$ 33.57	16.65

Zone Differential (Add to Zone 1 rates):
Zone 2 (26-45 radius miles) = $1.00
Zone 3 (Over 45 radius miles) - $1.30

BASEPOINTS: CENTRALIA, OLYMPIA, TACOMA

INFORMATIONAL COPY ONLY - NOT FOR BIDDING

POWER EQUIPMENT OPERATORS CLASSIFICATIONS

GROUP 1 AAA - Cranes-over 300 tons or 300 ft of boom (including jib with attachments)

GROUP 1AA - Cranes- 200 tonsto 300 tons, or 250 ft of boom (including jib with attachments; Tower crane over 175 ft in height, bas to boom

GROUP 1A - Cranes, 100 tons thru 199 tons, or 150 ft of boom (including jib with attachments); Crane-overhead, bridge type, 100 tons and over; Tower crane up to 175 ft in height base to boom; Loaders-overhead, 8 yards and over; Shovels, excavator, backhoes-6 yards and over with attachments

GROUP 1 - Cableway; Cranes 45 tons thru 99 tons under 150 ft of boom (including jib with attachments); Crane-overhead, bridge type, 45 tons thru 99 tons; Derricks on building work; Excavator, shovel, backhoes over 3 yards and under 6 yards; Hard tail end dump articulating off-road equipment 45 yards and over; Loader- overhead, 6 yards to, but not including, 8 yards; Mucking machine, mole, tunnel, drill and/or shield; Quad 9 HD 41, D-10; Remote control operator on rubber tired earth moving equipment; Rollagon; Scrapers-self-propelled 45 yards and over; Slipform pavers; Transporters, all track or truck type

GROUP 2 - Barrier machine (zipper); Batch Plant Operator-concrete; Bump Cutter; Cranes, 20 tons thru 44 tons with attachments; Crane-Overhead, bridge type, 20 tons through 44 tons; Chipper; Concrete pump-truck mount with boom attachment; Crusher; Deck engineer/deck winches (power); Drilling machine; Excavator, shovel, backhoe-3 yards and under; Finishing machine, Bidwell, Gamaco and similar equipment; Guardrail punch; Loaders, overhead under 6 yards; Loaders-plant feed; Locomotives-all; Mechanics- all; Mixers, asphalt plant; Motor patrol graders, finishing; Piledriver (other than crane mount); Roto-mill, roto-grinder; Screedman, spreader, topside operator-Blaw Knox, Cedar Rapids, Jaeger, Caterpillar, Barbar Green; Scraper-self propelled, hard tail end dump, articulating off-road equipment- under 45 yards; Subgrader trimmer; Tractors, backhoe over 75 hp; Transfer material service machine-shuttle buggy, Blaw Knox- Roadtec; Truck Crane oiler/driver-100 tons and over; Truck Mount Portable Conveyor; Yo Yo pay

INFORMATIONAL COPY ONLY - NOT FOR BIDDING

GROUP 3 - Conveyors; Cranes through 19 tons with attachments; Crane-A-frame over 10 tons; Drill oilers-auger type, truck or crane mount; Dozer-D-9 and under; Forklift-3000 lbs. and over with attachments; Horizontal/directional drill locator; Outside Hoists-(elevators and manlifts), air tuggers, strato tower bucket elevators; Hydralifts/boom trucks over 10 tons; Loaders-elevating type, belt; Motor patrol grader-nonfinishing; Plant oiler- asphalt, crusher; Pump-Concrete; Roller, plant mix or multi-lfit materials; Saws-concrete; Scrapers, concrete and carry all; Service engineers-equipment; Trenching machines; Truck crane oiler/driver under 100 tons; Tractors, backhoe under 75 hp

GROUP 4 - Assistant Engineer; Bobcat; Brooms; Compressor; Concrete Finish Machine-laser screed; Cranes A-frame 10 tons and under; Elevator and manlift (permanent and shaft type); Forklifts-under 3000 lbs. with attachments; Gradechecker, stakehop; Hydralifts/boom trucks, 10 tons and under; Oil distributors, blower distribution and mulch seeding operator; Pavement breaker; Posthole digger-mechanical; Power plant; Pumps-water; Rigger and Bellman; Roller-other than plant mix; Wheel Tractors, farmall type; Shotcrete/gunite equipment operator

FOOTNOTE A- Reduced rates may be paid on the following:

1. Projects involving work on structures such as buildings and bridges whose total value is less than $1.5 million excluding mechanical, electrical, and utility portions of the contract.

2. Projects of less than $1 million where no building is involved. Surfacing and paving included, but utilities excluded.

3. Marine projects (docks, wharfs, etc.) less than $150,000.

HANDLING OF HAZARDOUS WASTE MATERIALS: Personnel in all craft classifications subject to working inside a federally designated hazardous perimeter shall be elgible for compensation in accordance with the following group schedule relative to the level of hazardous waste as outlined in the specific hazardous waste project site safety plan.

H-1 Base wage rate when on a hazardous waste site when not outfitted with protective clothing, Class "D" Suit - Base wage rate plus $ .50 per hour.
H-2 Class "C" Suit - Base wage rate plus $1.00 per hour.
H-3 Class "B" Suit - Base wage rate plus $1.50 per hour.
H-4 Class "A" Suit - Base wage rate plus $2.00 per hour.

INFORMATIONAL COPY ONLY - NOT FOR BIDDING

ENGI0701-002 01/01/2014

CLARK, COWLITZ, KLICKKITAT, PACIFIC (SOUTH), SKAMANIA, AND WAHKIAKUM COUNTIES

POWER RQUIPMENT OPERATORS: ZONE 1

	Rates	Fringes
Power equipment operators: (See Footnote A)		
GROUP 1	$ 38.25	13.70
GROUP 1A	$ 40.16	13.70
GROUP 1B	$ 42.08	13.70
GROUP 2	$ 36.56	13.70
GROUP 3	$ 35.54	13.70
GROUP 4	$ 34.56	13.70
GROUP 5	$ 33.43	13.70
GROUP 6	$ 30.34	13.70

Zone Differential (add to Zone 1 rates):
Zone 2 - $3.00
Zone 3 - $6.00

INFORMATIONAL COPY ONLY - NOT FOR BIDDING

For the following metropolitan counties: MULTNOMAH; CLACKAMAS; MARION; WASHINGTON; YAMHILL; AND COLUMBIA; CLARK; AND COWLITZ COUNTY, WASHINGTON WITH MODIFICATIONS AS INDICATED:

All jobs or projects located in Multnomah, Clackamas and Marion Counties, West of the western boundary of Mt. Hood National Forest and West of Mile Post 30 on Interstate 84 and West of Mile Post 30 on State Highway 26 and West of Mile Post 30 on Highway 22 and all jobs or projects located in Yamhill County, Washington County and Columbia County and all jobs or porjects located in Clark & Cowlitz County, Washington except that portion of Cowlitz County in the Mt. St. Helens "Blast Zone" shall receive Zone I pay for all classifications.

All jobs or projects located in the area outside the identified boundary above, but less than 50 miles from the Portland City Hall shall receive Zone II pay for all classifications.

All jobs or projects located more than 50 miles from the Portland City Hall, but outside the identified border above, shall receive Zone III pay for all classifications.

For the following cities: ALBANY; BEND; COOS BAY; EUGENE; GRANTS PASS; KLAMATH FALLS; MEDFORD; ROSEBURG

All jobs or projects located within 30 miles of the respective city hall of the above mentioned cities shall receive Zone I pay for all classifications.

All jobs or projects located more than 30 miles and less than 50 miles from the respective city hall of the above mentioned cities shall receive Zone II pay for all classifications.

All jobs or projects located more than 50 miles from the respective city hall of the above mentioned cities shall receive Zone III pay for all classifications.

INFORMATIONAL COPY ONLY - NOT FOR BIDDING

POWER EQUIPMENT OPERATORS CLASSIFICATIONS

GROUP 1: CONCRETE: Batch Plant and/or Wet Mix Operator, three units or more; CRANE: Helicopter Operator, when used in erecting work; Whirley Operator, 90 ton and over; LATTICE BOOM CRANE: Operator 200 tons through 299 tons, and/or over 200 feet boom; HYDRAULIC CRANE: Hydraulic Crane Operator 90 tons through 199 tons with luffing or tower attachments; FLOATING EQUIPMENT: Floating Crane, 150 ton but less than 250 ton

GROUP 1A: HYDRAULIC CRANE: Hydraulic Operator, 200 tons and over (with luffing or tower attachment); LATTICE BOOM CRANE: Operator, 200 tons through 299 tons, with over 200 feet boom; FLOATING EQUIPMENT: Floating Crane 250 ton and over

GROUP 1B: LATTICE BOOM CRANE: Operator, 300 tons through 399 tons with over 200 feet boom; Operator 400 tons and over; FLOATING EQUIPMENT: Floating Crane 350 ton and over

GROUP 2: ASPHALT: Asphalt Plant Operator (any type); Roto Mill, pavement profiler, operator, 6 foot lateral cut and over; BLADE: Auto Grader or "Trimmer" (Grade Checker required); Blade Operator, Robotic; BULLDOZERS: Bulldozer operator over 120,000 lbs and above; Bulldozer operator, twin engine; Bulldozer Operator,tandem, quadnine, D10, D11, and similar type; Bulldozere Robotic Equipment (any type; CONCRETE: Batch Plant and/or Wet Mix Operator, one and two drum; Automatic Concrete Slip Form Paver Operator; Concrete Canal Line Operator; Concrete Profiler, Diamond Head; CRANE: Cableway Operator, 25 tons and over; HYDRAULIC CRANE: Hydraulic crane operator 90 tons through 199 tons (without luffing or tower attachment); TOWER/WHIRLEY OPERATOR: Tower Crane Operator; Whirley Operator, under 90 tons; LATTICE BOOM CRANE: 90 through 199 tons and/or 150 to 200 feet boom; CRUSHER: Crusher Plant Operator; FLOATING EQUIPMENT: Floating Clamshell, etc.operator, 3 cu. yds. and over; Floating Crane (derrick barge) Operator, 30 tons but less than 150 tons; LOADERS: Loader operator, 120,000 lbs. and above; REMOTE CONTROL: Remote controlled earth-moving equipment; RUBBER-TIRED SCRAPERS: Rubber-tired scraper operator, with tandem scrapers, multi-engine; SHOVEL, DRAGLINE, CLAMSHELL, SKOOPER OPERATOR: Shovel, Dragline, Clamshell, operator 5 cu. yds and over; TRENCHING MACHINE: Wheel Excavator, under 750 cu. yds. per hour (Grade Oiler required); Canal Trimmer (Grade Oiler required); Wheel Excavator, over 750 cu. yds. per hour; Band Wagon (in conjunction with wheel excavator); UNDERWATER EQUIPMENT: Underwater Equipment Operator, remote or otherwise; HYDRAULIC HOES-EXCAVATOR: Excavator over 130,000 lbs.; HYDRAULIC CRANE: Hydraulic crane operator, 50 tons through 89 tons (with luffing or tower attachment);

INFORMATIONAL COPY ONLY - NOT FOR BIDDING

GROUP 3: BULLDOZERS: Bulldozer operator, over 70,000 lbs. up to and including 120,000 lbs.; HYDRAULIC CRANE: Hydraulic crane operator, 50 tons through 89 tons (without luffing or tower attachment); LATTICE BOOM CRANES: Lattice Boom Crane-50 through 89 tons (and less than 150 feet boom); FORKLIFT: Rock Hound Operator; HYDRAULIC HOES-EXCAVATOR: excavator over 80,000 lbs. through 130,000 lbs.; LOADERS: Loader operator 60,000 and less than 120,000; RUBBER-TIRED SCRAPERS: Scraper Operator, with tandem scrapers; Self-loading, paddle wheel, auger type, finish and/or 2 or more units; SHOVEL, DRAGLINE, CLAMSHELL,SKOOPER OPERATOR: Shovel, Dragline, Clamshell operators 3 cu. yds. but less than 5 cu yds.

GROUP 4: ASPHALT: Screed Operator; Asphalt Paver operator (screeman required); BLADE: Blade operator; Blade operator, finish; Blade operator, externally controlled by electronic, mechanical hydraulic means; Blade operator, multi-engine; BULLDOZERS: Bulldozer Operator over 20,000 lbs and more than 100 horse up to 70,000 lbs; Drill Cat Operator; Side-boom Operator; Cable-Plow Operator (any type); CLEARING: Log Skidders; Chippers; Incinerator; Stump Splitter (loader mounted or similar type); Stump Grinder (loader mounted or similar type; Tub Grinder; Land Clearing Machine (Track mounted forestry mowing & grinding machine); Hydro Axe (loader mounted or similar type); COMPACTORS SELF-PROPELLED: Compactor Operator, with blade; Compactor Operator, multi-engine; Compactor Operator, robotic; CONCRETE: Mixer Mobile Operator; Screed Operator; Concrete Cooling Machine Operator; Concrete Paving Road Mixer; Concrete Breaker; Reinforced Tank Banding Machine (K-17 or similar types); Laser Screed; CRANE: Chicago boom and similar types; Lift Slab Machine Operator; Boom type lifting device, 5 ton capacity or less; Hoist Operator, two (2) drum; Hoist Operator, three (3) or more drums; Derrick Operator, under 100 ton; Hoist Operator, stiff leg, guy derrick or similar type, 50 ton and over; Cableway Operator up to twenty (25) ton; Bridge Crane Operator, Locomotive, Gantry, Overhead, Cherry Picker or similar type crane; Carry Deck Operator; Hydraulic Crane Operator, under 50 tons; LATTICE BOOM CRANE OPERATOR: Lattice Boom Crane Operator, under 50 tons; CRUSHER: Generator Operator; Diesel-Electric Engineer; Grizzley Operator; Drill Doctor; Boring Machine Operator; Driller-Percussion, Diamond, Core, Cable, Rotary and similar type; Cat Drill (John Henry); Directional Drill Operator over 20,000 lbs pullback; FLOATING EQUIPMENT: Diesel-electric Engineer; Jack Operator, elevating barges, Barge Operator, self-unloading; Piledriver Operator (not crane type) (Deckhand required); Floating Clamshelll, etc. Operator, under 3 cu. yds. (Fireman or Diesel-Electric Engineer required); Floating Crane (derrick barge) Operator, less than 30 tons; GENERATORS: Generator Operator; Diesel-electric Engineer; GUARDRAIL EQUIPMENT: Guardrail Punch Operator (all types); Guardrail Auger Operator (all types); Combination Guardrail machines, i.e., punch auger, etc.; HEATING PLANT: Surface

INFORMATIONAL COPY ONLY - NOT FOR BIDDING

Heater and Planer Operator; HYDRAULIC HOES EXCAVATOR: Robotic Hydraulic backhoe operator, track and wheel type up to and including 20,0000 lbs. with any or all attachments; Excavator Operator over 20,000 lbs through 80,000 lbs.; LOADERS: Belt Loaders, Kolman and Ko Cal types; Loaders Operator, front end and overhead, 25,000 lbs and less than 60,000 lbs; Elevating Grader Operator by Tractor operator, Sierra, Euclid or similar types; PILEDRIVERS: Hammer Operator; Piledriver Operator (not crane type); PIPELINE, SEWER WATER: Pipe Cleaning Machine Operator; Pipe Doping Machine Operator; Pipe Bending Machine Operator; Pipe Wrapping Machine Operator; Boring Machine Operator; Back Filling Machine Operator; REMOTE CONTROL: Concrete Cleaning Decontamination Machine Operator; Ultra High Pressure Water Jet Cutting Tool System Operator/Mechanic; Vacuum Blasting Machine Operator/mechanic; REPAIRMEN, HEAVY DUTY: Diesel Electric Engineer (Plant or Floating; Bolt Threading Machine operator; Drill Doctor (Bit Grinder); H.D. Mechanic; Machine Tool Operator; RUBBER-TIRED SCRAPERS: Rubber-tired Scraper Operator,single engine, single scraper; Self-loading, paddle wheel, auger type under 15 cu. yds.; Rubber-tired Scraper Operator, twin engine; Rubber-tired Scraper Operator, with push- ull attachments; Self Loading, paddle wheel, auger type 15 cu. yds. and over, single engine; Water pulls, water wagons; SHOVEL, DRAGLINE, CLAMSHELL, SKOOPER OPERATOR: Diesel Electric Engineer; Stationay Drag Scraper Operator; Shovel, Dragline, Clamshell, Operator under 3 cy yds.; Grade-all Operator; SURFACE (BASE) MATERIAL: Blade mounted spreaders, Ulrich and similar types; TRACTOR-RUBBERED TIRED: Tractor operator, rubber-tired, over 50 hp flywheel; Tractor operator, with boom attachment; Rubber-tired dozers and pushers (Michigan, Cat, Hough type); Skip Loader, Drag Box; TRENCHING MACHINE: Trenching Machine operator, digging capacity over 3 ft depth; Back filling machine operator; TUNNEL: Mucking machine operator

INFORMATIONAL COPY ONLY - NOT FOR BIDDING

GROUP 5: ASPHALT: Extrusion Machine Operator; Roller Operator (any asphalt mix); Asphalt Burner and Reconditioner Operator (any type); Roto-Mill, pavement profiler, ground man; BULLDOZERS: Bulldozer operator, 20,000 lbs. or less or 100 horse or less; COMPRESSORS: Compressor Operator (any power), over 1,250 cu. ft. total capacity; COMPACTORS: Compactor Operator, including vibratory; Wagner Pactor Operator or similar type (without blade); CONCRETE: Combination mixer and Compressor Operator, gunite work; Concrete Batch Plant Quality Control Operator; Beltcrete Operator; Pumpcrete Operator (any type); Pavement Grinder and/or Grooving Machine Operator (riding type); Cement Pump Operator, Fuller-Kenyon and similar; Concrete Pump Operator; Grouting Machine Operator; Concrete mixer operator, single drum, under (5) bag capacity; Cast in place pipe laying machine; maginnis Internal Full slab vibrator operator; Concrete finishing mahine operator, Clary, Johnson, Bidwell, Burgess Bridge deck or similar type; Curb Machine Operator, mechanical Berm, Curb and/or Curb and Gutter; Concrete Joint Machine Operator; Concrete Planer Operator; Tower Mobile Operator; Power Jumbo Operator setting slip forms in tunnels; Slip Form Pumps, power driven hydraulic lifting device for concrete forms; Concrete Paving Machine Operator; Concrete Finishing Machine Operator; Concrete Spreader Operator; CRANE: Helicopter Hoist Operator; Hoist Operator, single drum; Elevator Operator; A-frame Truck Operator, Double drum; Boom Truck Operator; HYDRAULIC CRANE OPERATOR: Hydraulic Boom Truck, Pittman; DRILLING: Churm Drill and Earth Boring Machine Operator; Vacuum Truck; Directional Drill Operator over 20,000 lbs pullback; FLOATING EQUIPMENT: Fireman; FORKLIFT: Fork Lift, over 10 ton and/or robotic; HYDRAULIC HOES EXCAVATORS: Hydraulic Backhoe Operator, wheel type (Ford, John Deere, Case type); Hydraulic Backhoe Operator track type up to and including 20,000 lbs.; LOADERS: Loaders, rubber- tired type, less than 25,000 lbs; Elevating Grader Operator, Tractor Towed requiring Operator or Grader; Elevating loader operator, Athey and similar types; OILERS: Service oiler (Greaser); PIPELINE-SEWER WATER: Hydra hammer or simialr types; Pavement Breaker Operator; PUMPS: Pump Operator, more than 5 (any size); Pot Rammer Operator; RAILROAD EQUIPMENT: Locomotive Operator, under 40 tons; Ballast Regulator Operator; Ballast Tamper Multi-Purpose Operator; Track Liner Operator; Tie Spacer Operator; Shuttle Car Operator; Locomotive Operator, 40 tons and over; MATERIAL HAULRS: Cat wagon DJBs Volvo similar types; Conveyored material hauler; SURFACING (BASE) MATERIAL: Rock Spreaders, self-propelled; Pulva-mixer or similar types; Chiip Spreading machine operator; Lime spreading operator, construction job siter; SWEEPERS: Sweeper operator (Wayne type) self-propelled construction job site; TRACTOR-RUBBER TIRED: Tractor operator, rubber-tired, 50 hp flywheel and under; Trenching machine operator, maximum digging capacity 3 ft depth; TUNNEL: Dinkey

INFORMATIONAL COPY ONLY - NOT FOR BIDDING

GROUP 6: ASPHALT: Plant Oiler; Plant Fireman; Pugmill Operator (any type); Truck mounted asphalt spreader, with screed; COMPRESSORS: Compressor Operator (any power), under 1,250 cu. ft. total capacity; CONCRETE: Plant Oiler, Assistant Conveyor Operator; Conveyor Operator; Mixer Box Operator (C.T.B., dry batch, etc.); Cement Hog Operator; Concrete Saw Operator; Concrete Curing Machine Operator (riding type); Wire Mat or Brooming Machine Operator; CRANE: Oiler; Fireman, all equipment; Truck Crane Oiler Driver; A-frame Truck Operator, single drum; Tugger or Coffin Type Hoist Operator; CRUSHER: Crusher Oiler; Crusher Feederman; CRUSHER: Crusher oiler; Crusher feederman; DRILLING: Drill Tender; Auger Oiler; FLOATING EQUIPMENT: Deckhand; Boatman; FORKLIFT: Self-propelled Scaffolding Operator, construction job site (exclduing working platform); Fork Lift or Lumber Stacker Operator, construction job site; Ross Carrier Operator, construction job site; Lull Hi-Lift Operator or Similar Type; GUARDRAIL EQUIPMENT: Oiler; Auger Oiler; Oiler, combination guardrail machines; Guardrail Punch Oiler; HEATING PLANT: Temporary Heating Plant Operator; LOADERS: Bobcat, skid steer (less than 1 cu yd.); Bucket Elevator Loader Operator, BarberGreene and similar types; OILERS: Oiler; Guardrail Punch Oiler; Truck Crane Oiler-Driver; Auger Oiler; Grade Oiler, required to check grade; Grade Checker; Rigger; PIPELINE-SEWER WATER: Tar Pot Fireman; Tar Pot Fireman (power agitated); PUMPS: Pump Operator (any power); Hydrostatic Pump Operator; RAILROAD EQUIPMENT: Brakeman; Oiler; Switchman; Motorman; Ballast Jack Tamper Operator; SHOVEL, DRAGLINE, CLAMSHELL, SKOOPER, ETC. OPERATOR: Oiler, Grade Oiler (required to check grade); Grade Checker; Fireman; SWEEPER: Broom operator, self propelled, construction job site; SURFACING (BASE) MATERIAL: Roller Operator, grading of base rock (not asphalt); Tamping Machine operartor, mechanical, self-propelled; Hydrographic Seeder Machine Operator; TRENCHING MACHINE: Oiler; Grade Oiler; TUNNEL: Conveyor operator; Air filtration equipment operator

---

INFORMATIONAL COPY ONLY - NOT FOR BIDDING

IRON0014-005 07/01/2013

ADAMS, ASOTIN, BENTON, COLUMBIA, DOUGLAS, FERRY, FRANKLIN, GARFIELD, GRANT, LINCOLN, OKANOGAN, PEND ORIELLE, SPOKANE, STEVENS, WALLA WALLA AND WHITMAN COUNTIES

	Rates	Fringes
IRONWORKER	$ 31.60	21.35

IRON0029-002 07/01/2013

CLARK, COWLITZ, KLICKITAT, PACIFIC, SKAMANIA, AND WAHKAIKUM COUNTIES

	Rates	Fringes
IRONWORKER	$ 34.12	21.35

IRON0086-002 07/01/2013

YAKIMA, KITTITAS AND CHELAN COUNTIES

	Rates	Fringes
IRONWORKER	$ 31.60	21.35

IRON0086-004 07/01/2013

CLALLAM, GRAYS HARBOR, ISLAND, JEFFERSON, KING, KITSAP, LEWIS, MASON, PIERCE, SKAGIT, SNOHOMISH, THURSTON, AND WHATCOM COUNTIES

	Rates	Fringes
IRONWORKER	$ 38.14	21.35

INFORMATIONAL COPY ONLY - NOT FOR BIDDING

LABO0001-002 06/01/2014

ZONE 1:

	Rates	Fringes
Laborers:		
CALLAM, GRAYS HARBOR, ISLAND, JEFFERSON, KING, KITSAP, LEWIS, MASON, PACIFIC (NORTH OF STRAIGHT LINE MADE BY EXTENDING THE NORTH BOUNDARY WAHKIAKUM COUNTY WEST TO THE PACIFIC OCEAN), PIERCE, SAN JUAN,SKAGIT, SNOHOMISH,THURSTON AND WHATCOM COUNTIES		
GROUP 1	$ 22.49	10.30
GROUP 2	$ 25.79	10.30
GROUP 3	$ 32.29	10.30
GROUP 4	$ 33.08	10.30
GROUP 5	$ 33.62	10.30
CHELAN, DOUGLAS (WEST OF THE 120TH MERIDIAN), KITTITAS AND YAKIMA COUNTIES		
GROUP 1	$ 18.95	10.30
GROUP 2	$ 21.76	10.30
GROUP 3	$ 23.85	10.30
GROUP 4	$ 24.43	10.30
GROUP 5	$ 24.85	10.30

BASE POINTS: BELLINGHAM, MT. VERNON, EVERETT, SEATTLE, KENT, TACOMA, OLYMPIA, CENTRALIA, ABERDEEN, SHELTON, PT. TOWNSEND, PT. ANGELES, AND BREMERTON

ZONE 1 - Projects within 25 radius miles of the respective city hall
ZONE 2 - More than 25 but less than 45 radius miles from the respective city hall
ZONE 3 - More than 45 radius miles from the respective city hall

ZONE DIFFERENTIAL (ADD TO ZONE 1 RATES):
ZONE 2 - $1.00
ZONE 3 - $1.30

BASE POINTS: CHELAN, SUNNYSIDE, WENATCHEE, AND YAKIMA

ZONE 1 - Projects within 25 radius miles of the respective city hall
ZONE 2 - More than 25 radius miles from the respective city hall

ZONE DIFFERENTIAL (ADD TO ZONE 1 RATES):
ZONE 2 - $2.25

INFORMATIONAL COPY ONLY - NOT FOR BIDDING

LABORERS CLASSIFICATIONS

GROUP 1: Landscaping and Planting; Watchman; Window Washer/Cleaner (detail clean-up, such as but not limited to cleaning floors, ceilings, walls, windows, etc., prior to final acceptance by the owner)

GROUP 2: Batch Weighman; Crusher Feeder; Fence Laborer; Flagman; Pilot Car

GROUP 3: General Laborer; Air, Gas, or Electric Vibrating Screed; Asbestos Abatement Laborer; Ballast Regulator Machine; Brush Cutter; Brush Hog Feeder; Burner; Carpenter Tender; Cement Finisher Tender; Change House or Dry Shack; Chipping Gun (under 30 lbs.); Choker Setter; Chuck Tender; Clean-up Laborer; Concrete Form Stripper; Curing Laborer; Demolition (wrecking and moving including charred material); Ditch Digger; Dump Person; Fine Graders; Firewatch; Form Setter; Gabian Basket Builders; Grout Machine Tender; Grinders; Guardrail Erector; Hazardous Waste Worker (Level C: uses a chemical "splash suit" and air purifying respirator); Maintenance Person; Material Yard Person; Pot Tender; Rip Rap Person; Riggers; Scale Person; Sloper Sprayer; Signal Person; Stock Piler; Stake Hopper; Toolroom Man (at job site); Topper-Tailer; Track Laborer; Truck Spotter; Vinyl Seamer

GROUP 4: Cement Dumper-Paving; Chipping Gun (over 30 lbs.); Clary Power Spreader; Concrete Dumper/Chute Operator; Concrete Saw Operator; Drill Operator (hydraulic, diamond, aiartrac); Faller and Bucker Chain Saw; Grade Checker and Transit Person; Groutmen (pressure) including post tension beams; Hazardous Waste Worker (Level B: uses same respirator protection as Level A. A supplied air line is provided in conjunction with a chemical "splash suit"); High Scaler; Jackhammer; Laserbeam Operator; Manhole Builder-Mudman; Nozzleman (concrete pump, green cutter when using combination of high pressure air and water on concrete and rock, sandblast, gunite, shotcrete, water blaster, vacuum blaster); Pavement Breaker; Pipe Layer and Caulker; Pipe Pot Tender; Pipe Reliner (not insert type); Pipe Wrapper; Power Jacks; Railroad Spike Puller-Power; Raker-Asphalt; Rivet Buster; Rodder; Sloper (over 20 ft); Spreader (concrete); Tamper and Similar electric, air and glas operated tool; Timber Person-sewer (lagger shorer and cribber); Track Liner Power; Tugger Operator; Vibrator; Well Point Laborer

GROUP 5: Caisson Worker; Miner; Mortarman and Hodcarrier; Powderman; Re-Timberman; Hazardous Waste Worker (Level A: utilizes a fully encapsulated suit with a self-contained breathing apparatus or a supplied air line).

INFORMATIONAL COPY ONLY - NOT FOR BIDDING

LABO0238-004 06/01/2014

PASCO AREA: ADAMS, BENTON, COLUMBIA,DOUGLAS (East of 120th Meridian), FERRY, FRANKLIN, GRANT, OKANOGAN, WALLA WALLA

SPOKANE AREA: ASOTIN, GARFIELD, LINCOLN, PEND OREILLE, SPOKANE, STEVENS & WHITMAN COUNTIES

	Rates	Fringes
LABORER (PASCO)		
GROUP 1	$ 22.25	10.95
GROUP 2	$ 24.35	10.95
GROUP 3	$ 24.62	10.95
GROUP 4	$ 24.89	10.95
GROUP 5	$ 25.17	10.95
LABORER (SPOKANE)		
GROUP 1	$ 21.95	10.95
GROUP 2	$ 24.05	10.95
GROUP 3	$ 24.32	10.95
GROUP 4	$ 24.59	10.95
GROUP 5	$ 24.87	10.95

Zone Differential (Add to Zone 1 rate): $2.00

BASE POINTS: Spokane, Pasco, Lewiston

Zone 1: 0-45 radius miles from the main post office.
Zone 2: 45 radius miles and over from the main post office.

INFORMATIONAL COPY ONLY - NOT FOR BIDDING

LABORERS CLASSIFICATIONS

GROUP 1: Flagman; Landscape Laborer; Scaleman; Traffic Control Maintenance Laborer (to include erection and maintenance of barricades, signs and relief of flagperson); Window Washer/Cleaner (detail cleanup, such as, but not limited to cleaning floors, ceilings, walls, windows, etc. prior to final acceptance by the owner)

GROUP 2: Asbestos Abatement Worker; Brush Hog Feeder; Carpenter Tender; Cement Handler; Clean-up Laborer; Concrete Crewman (to include stripping of forms, hand operating jacks on slip form construction, application of concrete curing compounds, pumpcrete machine, signaling, handling the nozzle of squeezcrete or similar machine,6 inches and smaller); Confined Space Attendant; Concrete Signalman; Crusher Feeder; Demolition (to include clean-up, burning, loading, wrecking and salvage of all material); Dumpman; Fence Erector; Firewatch; Form Cleaning Machine Feeder, Stacker; General Laborer; Grout Machine Header Tender; Guard Rail (to include guard rails, guide and reference posts, sign posts, and right-of-way markers); Hazardous Waste Worker, Level D (no respirator is used and skin protection is minimal); Miner, Class "A" (to include all bull gang, concrete crewman, dumpman and pumpcrete crewman, including distributing pipe, assembly & dismantle, and nipper); Nipper; Riprap Man; Sandblast Tailhoseman; Scaffold Erector (wood or steel); Stake Jumper; Structural Mover (to include separating foundation, preparation, cribbing, shoring, jacking and unloading of structures); Tailhoseman (water nozzle); Timber Bucker and Faller (by hand); Track Laborer (RR); Truck Loader; Well-Point Man; All Other Work Classifications Not Specially Listed Shall Be Classified As General Laborer

GROUP 3: Asphalt Roller, walking; Cement Finisher Tender; Concrete Saw, walking; Demolition Torch; Dope Pot Firemen, non-mechanical; Driller Tender (when required to move and position machine); Form Setter, Paving; Grade Checker using level; Hazardous Waste Worker, Level C (uses a chemical "splash suit" and air purifying respirator); Jackhammer Operator; Miner, Class "B" (to include brakeman, finisher, vibrator, form setter); Nozzleman (to include squeeze and flo-crete nozzle); Nozzleman, water, air or steam; Pavement Breaker (under 90 lbs.); Pipelayer, corrugated metal culvert; Pipelayer, multi- plate; Pot Tender; Power Buggy Operator; Power Tool Operator, gas, electric, pneumatic; Railroad Equipment, power driven, except dual mobile power spiker or puller; Railroad Power Spiker or Puller, dual mobile; Rodder and Spreader; Tamper (to include operation of Barco, Essex and similar tampers); Trencher, Shawnee; Tugger Operator; Wagon Drills; Water Pipe Liner; Wheelbarrow (power driven)

INFORMATIONAL COPY ONLY - NOT FOR BIDDING

GROUP 4: Air and Hydraulic Track Drill; Aspahlt Raker;Brush Machine (to include horizontal construction joint cleanup brush machine, power propelled); Caisson Worker, free air; Chain Saw Operator and Faller; Concrete Stack (to include laborers when laborers working on free standing concrete stacks for smoke or fume control above 40 feet high); Gunite (to include operation of machine and nozzle); Hazardous Waste Worker, Level B (uses same respirator protection as Level A. A supplied air line is provided in conjunction with a chemical "splash suit"); High Scaler; Laser Beam Operator (to include grade checker and elevation control); Miner, Class C (to include miner, nozzleman for concrete, laser beam operator and rigger on tunnels); Monitor Operator (air track or similar mounting); Mortar Mixer; Nozzleman (to include jet blasting nozzleman, over 1,200 lbs., jet blast machine power propelled, sandblast nozzle); Pavement Breaker (90 lbs. and over); Pipelayer (to include working topman, caulker, collarman, jointer, mortarman, rigger, jacker, shorer, valve or meter installer); Pipewrapper; Plasterer Tender; Vibrators (all)

GROUP 5 - Drills with Dual Masts; Hazardous Waste Worker, Level A (utilizes a fully encapsulated suit with a self-contained breathing apparatus or a supplied air line); Miner Class "D", (to include raise and shaft miner, laser beam operator on riases and shafts)

LABO0238-006 06/01/2014

COUNTIES EAST OF THE 120TH MERIDIAN: ADAMS, ASOTIN, BENTON, CHELAN, COLUMBIA, DOUGLAS, FERRY, FRANKLIN, GARFIELD, GRANT, LINCOLN, OKANOGAN, PEND OREILLE, STEVENS, SPOKANE, WALLA WALLA, WHITMAN

	Rates	Fringes
Hod Carrier	$ 24.32	10.95

LABO0335-001 06/01/2013

CLARK, COWLITZ, KLICKITAT, PACIFIC (SOUTH OF A STRAIGHT LINE MADE BY EXTENDING THE NORTH BOUNDARY LINE OF WAHKIAKUM COUNTY WEST TO THE PACIFIC OCEAN), SKAMANIA AND WAHKIAKUM COUNTIES

	Rates	Fringes
Laborers:		
ZONE 1:		
GROUP 1	$ 28.65	10.05
GROUP 2	$ 29.25	10.05
GROUP 3	$ 29.69	10.05
GROUP 4	$ 30.07	10.05
GROUP 5	$ 26.15	10.05
GROUP 6	$ 23.73	10.05
GROUP 7	$ 20.53	10.05

INFORMATIONAL COPY ONLY - NOT FOR BIDDING

Zone Differential (Add to Zone 1 rates):
Zone 2 $ 0.65
Zone 3 - 1.15
Zone 4 - 1.70
Zone 5 - 2.75

BASE POINTS: GOLDENDALE, LONGVIEW, AND VANCOUVER

ZONE 1: Projects within 30 miles of the respective city all.
ZONE 2: More than 30 miles but less than 40 miles from the respective city hall.
ZONE 3: More than 40 miles but less than 50 miles from the respective city hall.
ZONE 4: More than 50 miles but less than 80 miles from the respective city hall.
ZONE 5: More than 80 miles from the respective city hall.

LABORERS CLASSIFICATIONS

GROUP 1: Asphalt Plant Laborers; Asphalt Spreaders; Batch Weighman; Broomers; Brush Burners and Cutters; Car and Truck Loaders; Carpenter Tender; Change-House Man or Dry Shack Man; Choker Setter; Clean-up Laborers; Curing, Concrete; Demolition, Wrecking and Moving Laborers; Dumpers, road oiling crew; Dumpmen (for grading crew); Elevator Feeders; Median Rail Reference Post, Guide Post, Right of Way Marker; Fine Graders; Fire Watch; Form Strippers (not swinging stages); General Laborers; Hazardous Waste Worker; Leverman or Aggregate Spreader (Flaherty and similar types); Loading Spotters; Material Yard Man (including electrical); Pittsburgh Chipper Operator or Similar Types; Railroad Track Laborers; Ribbon Setters (including steel forms); Rip Rap Man (hand placed); Road Pump Tender; Sewer Labor; Signalman; Skipman; Slopers; Spraymen; Stake Chaser; Stockpiler; Tie Back Shoring; Timber Faller and Bucker (hand labor); Toolroom Man (at job site); Tunnel Bullgang (above ground); Weight-Man- Crusher (aggregate when used)

GROUP 2: Applicator (including pot power tender for same), applying protective material by hand or nozzle on utility lines or storage tanks on project; Brush Cutters (power saw); Burners; Choker Splicer; Clary Power Spreader and similar types; Clean- up Nozzleman-Green Cutter (concrete, rock, etc.); Concrete Power Buggyman; Concrete Laborer; Crusher Feeder; Demolition and Wrecking Charred Materials; Gunite Nozzleman Tender; Gunite or Sand Blasting Pot Tender; Handlers or Mixers of all Materials of an irritating nature (including cement and lime); Tool Operators (includes but not limited to: Dry Pack Machine; Jackhammer; Chipping Guns; Paving Breakers); Pipe Doping and Wrapping; Post Hole Digger, air, gas or electric; Vibrating Screed; Tampers; Sand Blasting (Wet); Stake-Setter; Tunnel-Muckers, Brakemen, Concrete Crew, Bullgang (underground)

INFORMATIONAL COPY ONLY - NOT FOR BIDDING

GROUP 3: Asbestos Removal; Bit Grinder; Drill Doctor; Drill Operators, air tracks, cat drills, wagon drills, rubber-mounted drills, and other similar types including at crusher plants; Gunite Nozzleman; High Scalers, Strippers and Drillers (covers work in swinging stages, chairs or belts, under extreme conditions unusual to normal drilling, blasting, barring-down, or sloping and stripping); Manhole Builder; Powdermen; Concrete Saw Operator; Pwdermen; Power Saw Operators (Bucking and Falling); Pumpcrete Nozzlemen; Sand Blasting (Dry); Sewer Timberman; Track Liners, Anchor Machines, Ballast Regulators, Multiple Tampers, Power Jacks, Tugger Operator; Tunnel-Chuck Tenders, Nippers and Timbermen; Vibrator; Water Blaster

GROUP 4: Asphalt Raker; Concrete Saw Operator (walls); Concrete Nozzelman; Grade Checker; Pipelayer; Laser Beam (pipelaying)-applicable when employee assigned to move, set up, align; Laser Beam; Tunnel Miners; Motorman-Dinky Locomotive-Tunnel; Powderman-Tunnel; Shield Operator-Tunnel

GROUP 5: Traffic Flaggers

GROUP 6: Fence Builders

GROUP 7: Landscaping or Planting Laborers

LABO0335-019 09/01/2013

	Rates	Fringes
Hod Carrier	$ 30.47	10.05

PAIN0005-002 07/01/2014

STATEWIDE EXCEPT CLARK, COWLITZ, KLICKITAT, PACIFIC (SOUTH), SKAMANIA, AND WAHKIAKUM COUNTIES

	Rates	Fringes
Painters:		
STRIPERS	$ 28.50	14.61

PAIN0005-004 03/01/2009

CLALLAM, GRAYS HARBOR, ISLAND, JEFFERSON, KING, KITSAP, LEWIS, MASON, PIERCE, SAN JUAN, SKAGIT, SNOHOMISH, THURSTON AND WHATCOM COUNTIES

	Rates	Fringes
PAINTER	$ 20.82	7.44

INFORMATIONAL COPY ONLY - NOT FOR BIDDING

PAIN0005-006 07/01/2014

ADAMS, ASOTIN; BENTON AND FRANKLIN (EXCEPT HANFORD SITE); CHELAN, COLUMBIA, DOUGLAS, FERRY, GARFIELD, GRANT, KITTITAS, LINCOLN, OKANOGAN, PEND OREILLE, SPOKANE, STEVENS, WALLA WALLA, WHITMAN AND YAKIMA COUNTIES

	Rates	Fringes
PAINTER		
Application of Cold Tar Products, Epoxies, Polyure thanes, Acids, Radiation Resistant Material, Water and Sandblasting	$ 26.65	10.48
Over 30'/Swing Stage Work	$ 22.20	7.98
Brush, Roller, Striping, Steam-cleaning and Spray	$ 21.55	10.48
Lead Abatement, Asbestos Abatement	$ 21.50	7.98

*$.70 shall be paid over and above the basic wage rates listed for work on swing stages and high work of over 30 feet.

PAIN0055-003 07/01/2014

CLARK, COWLITZ, KLICKITAT, PACIFIC, SKAMANIA, AND WAHKIAKUM COUNTIES

	Rates	Fringes
Painters:		
Brush & Roller	$ 21.67	9.40
High work - All work 60 ft. or higher	$ 22.42	9.40
Spray and Sandblasting	$ 22.27	9.40

PAIN0055-006 07/01/2013

CLARK, COWLITZ, KLICKITAT, SKAMANIA and WAHKIAKUM COUNTIES

	Rates	Fringes
Painters:		
HIGHWAY & PARKING LOT STRIPER	$ 33.41	10.36

INFORMATIONAL COPY ONLY - NOT FOR BIDDING

PLAS0072-004 06/01/2013

ADAMS, ASOTIN, BENTON, CHELAN, COLUMBIA, DOUGLAS, FERRY, FRANKLIN, GARFIELD, GRANT, KITTITAS, LINCOLN, OKANOGAN, PEND OREILLE, SPOKANE, STEVENS, WALLA WALLA, WHITMAN, AND YAKIMA COUNTIES

	Rates	Fringes
CEMENT MASON/CONCRETE FINISHER		
ZONE 1	$ 26.01	12.14

Zone Differential (Add to Zone 1 rate): Zone 2 - $2.00

BASE POINTS: Spokane, Pasco, Lewiston; Wenatchee
Zone 1: 0 - 45 radius miles from the main post office
Zone 2: Over 45 radius miles from the main post office

PLAS0528-001 06/01/2014

CLALLAM, COWLITZ, GRAYS HARBOR, ISLAND, JEFFERSON, KING, KITSAP, LEWIS, MASON, PACIFIC, PIERCE, SAN JUAN, SKAGIT, SNOHOMISH, THURSTON, WAHKIAKUM AND WHATCOM COUNTIES

	Rates	Fringes
Cement Masons:		
CEMENT MASON	$ 37.43	14.95
COMPOSITION, TROWEL MACHINE, GRINDER, POWER TOOLS, GUNNITE NOZZLE	$ 37.43	14.95
TROWLING MACHINE OPERATOR ON COMPOSITION	$ 37.93	14.95

PLAS0555-002 06/01/2014

CLARK, KLICKITAT AND SKAMANIA COUNTIES

ZONE 1:

	Rates	Fringes
Cement Masons:		
CEMENT MASONS DOING BOTH COMPOSITION/POWER MACHINERY AND SUSPENDED/HANGING SCAFFOLD	$ 30.58	17.76
CEMENT MASONS ON SUSPENDED, SWINGING AND/OR HANGING SCAFFOLD	$ 30.58	17.76
CEMENT MASONS	$ 29.98	17.76
COMPOSITION WORKERS AND POWER MACHINERY OPERATORS	$ 31.18	17.76

INFORMATIONAL COPY ONLY - NOT FOR BIDDING

Zone Differential (Add To Zone 1 Rates):
Zone 2 - $0.65
Zone 3 - 1.15
Zone 4 - 1.70
Zone 5 - 3.00

BASE POINTS: BEND, CORVALLIS, EUGENE, MEDFORD, PORTLAND, SALEM, THE DALLES, VANCOUVER

ZONE 1: Projects within 30 miles of the respective city hall
ZONE 2: More than 30 miles but less than 40 miles from the respective city hall.
ZONE 3: More than 40 miles but less than 50 miles from the respective city hall.
ZONE 4: More than 50 miles but less than 80 miles from the respective city hall.
ZONE 5: More than 80 miles from the respective city hall

TEAM0037-002 06/01/2014

CLARK, COWLITZ, KLICKITAT, PACIFIC (South of a straight line made by extending the north boundary line of Wahkiakum County west to the Pacific Ocean), SKAMANIA, AND WAHKIAKUM COUNTIES

	Rates	Fringes
Truck drivers:		
ZONE 1		
GROUP 1	$ 26.90	14.37
GROUP 2	$ 27.02	14.37
GROUP 3	$ 27.15	14.37
GROUP 4	$ 27.41	14.37
GROUP 5	$ 27.63	14.37
GROUP 6	$ 27.79	14.37
GROUP 7	$ 27.99	14.37

Zone Differential (Add to Zone 1 Rates):
Zone 2 - $0.65
Zone 3 - 1.15
Zone 4 - 1.70
Zone 5 - 2.75

BASE POINTS: ASTORIA, THE DALLES, LONGVIEW AND VANCOUVER

ZONE 1: Projects within 30 miles of the respective city hall.
ZONE 2: More than 30 miles but less than 40 miles from the respective city hall.
ZONE 3: More than 40 miles but less than 50 miles from the respective city hall.
ZONE 4: More than 50 miles but less than 80 miles from the respective city hall.
ZONE 5: More than 80 miles from the respective city hall.

INFORMATIONAL COPY ONLY - NOT FOR BIDDING

TRUCK DRIVERS CLASSIFICATIONS

GROUP 1: A Frame or Hydra lifrt truck w/load bearing surface; Articulated Dump Truck; Battery Rebuilders; Bus or Manhaul Driver; Concrete Buggies (power operated); Concrete Pump Truck; Dump Trucks, side, end and bottom dumps, including Semi Trucks and Trains or combinations there of: up to and including 10 cu. yds.; Lift Jitneys, Fork Lifts (all sizes in loading, unloading and transporting material on job site); Loader and/or Leverman on Concrete Dry Batch Plant (manually operated); Pilot Car; Pickup Truck; Solo Flat Bed and misc. Body Trucks, 0-10 tons; Truck Tender; Truck Mechanic Tender; Water Wagons (rated capacity) up to 3,000 gallons; Transit Mix and Wet or Dry Mix - 5 cu. yds. and under; Lubrication Man, Fuel Truck Driver, Tireman, Wash Rack, Steam Cleaner or combinations; Team Driver; Slurry Truck Driver or Leverman; Tireman

GROUP 2: Boom Truck/Hydra-lift or Retracting Crane; Challenger; Dumpsters or similar equipment all sizes; Dump Trucks/Articulated Dumps 6 cu to 10 cu.; Flaherty Spreader Driver or Leverman; Lowbed Equipment, Flat Bed Semi-trailer or doubles transporting equipment or wet or dry materials; Lumber Carrier, Driver-Straddle Carrier (used in loading, unloading and transporting of materials on job site); Oil Distributor Driver or Leverman; Transit mix and wet or dry mix trcuks: over 5 cu. yds. and including 7 cu. yds.; Vacuum Trucks; Water truck/Wagons (rated capacity) over 3,000 to 5,000 gallons

GROUP 3: Ammonia Nitrate Distributor Driver; Dump trucks, side, end and bottom dumps, including Semi Trucks and Trains or combinations thereof: over 10 cu. yds. and including 30 cu. yds. includes Articulated Dump Trucks; Self-Propelled Street Sweeper; Transit mix and wet or dry mix truck: over 7 cu yds. and including 11 cu yds.; Truck Mechanic-Welder-Body Repairman; Utility and Clean-up Truck; Water Wagons (rated capacity) over 5,000 to 10,000 gallons

GROUP 4: Asphalt Burner; Dump Trucks, side, end and bottom cumps, including Semi-Trucks and Trains or combinations thereof: over 30 cu. yds. and including 50 cu. yds. includes Articulated Dump Trucks; Fire Guard; Transit Mix and Wet or Dry Mix Trucks, over 11 cu. yds. and including 15 cu. yds.; Water Wagon (rated capacity) over 10,000 gallons to 15,000 gallons

GROUP 5: Composite Crewman; Dump Trucks, side, end and bottom dumps, including Semi Trucks and Trains or combinations thereof: over 50 cu. yds. and including 60 cu. yds. includes Articulated Dump Trucks

GROUP 6: Bulk Cement Spreader w/o Auger; Dry Pre-Batch concrete Mix Trucks; Dump trucks, side, end and bottom dumps, including Semi Trucks and Trains of combinations thereof: over 60 cu. yds. and including 80 cu. yds., and includes Articulated Dump Trucks; Skid Truck

INFORMATIONAL COPY ONLY - NOT FOR BIDDING

GROUP 7: Dump Trucks, side, end and bottom dumps, including Semi Trucks and Trains or combinations thereof: over 80 cu. yds. and including 100 cu. yds., includes Articulated Dump Trucks; Industrial Lift Truck (mechanical tailgate)

TEAM0174-001 01/01/2014

CLALLAM, GRAYS HARBOR, ISLAND, JEFFERSON, KING, KITSAP, LEWIS, MASON, PACIFIC (North of a straight line made by extending the north boundary line of Wahkiakum County west to the Pacific Ocean), PIERCE, SAN JUAN, SKAGIT, SNOHOMISH, THURSTON AND WHATCOM COUNTIES

	Rates	Fringes
Truck drivers:		
ZONE A:		
GROUP 1:.....	$ 32.18	16.69
GROUP 2:.....	$ 31.34	16.69
GROUP 3:.....	$ 28.53	16.69
GROUP 4:.....	$ 23.56	16.69
GROUP 5:.....	$ 31.73	16.69

ZONE B (25-45 miles from center of listed cities*): Add $.70 per hour to Zone A rates.
ZONE C (over 45 miles from centr of listed cities*): Add $1.00 per hour to Zone A rates.

*Zone pay will be calculated from the city center of the following listed cities:

BELLINGHAM	CENTRALIA	RAYMOND	OLYMPIA
EVERETT	SHELTON	ANACORTES	BELLEVUE
SEATTLE	PORT ANGELES	MT. VERNON	KENT
TACOMA	PORT TOWNSEND	ABERDEEN	BREMERTON

TRUCK DRIVERS CLASSIFICATIONS

GROUP 1 - "A-frame or Hydralift" trucks and Boom trucks or similar equipment when "A" frame or "Hydralift" and Boom truck or similar equipment is used; Buggymobile; Bulk Cement Tanker; Dumpsters and similar equipment, Tournorockers, Tournowagon, Tournotrailer, Cat DW series, Terra Cobra, Le Tourneau, Westinghouse, Athye Wagon, Euclid Two and Four-Wheeled power tractor with trailer and similar top-loaded equipment transporting material: Dump Trucks, side, end and bottom dump, including semi-trucks and trains or combinations thereof with 16 yards to 30 yards capacity: Over 30 yards $.15 per hour additional for each 10 yard increment; Explosive Truck (field mix) and similar equipment; Hyster Operators (handling bulk loose aggregates); Lowbed and Heavy Duty Trailer; Road Oil Distributor Driver; Spreader, Flaherty Transit mix used exclusively in heavy construction; Water Wagon and Tank Truck-3,000 gallons and over capacity

INFORMATIONAL COPY ONLY - NOT FOR BIDDING

GROUP 2 - Bulllifts, or similar equipment used in loading or unloading trucks, transporting materials on job site; Dumpsters, and similar equipment, Tournorockers, Tournowagon, Turnotrailer, Cat. D.W. Series, Terra Cobra, Le Tourneau, Westinghouse, Athye wagon, Euclid two and four-wheeled power tractor with trailer and similar top-loaded equipment transporting material: Dump trucks, side, end and bottom dump, including semi-trucks and trains or combinations thereof with less than 16 yards capacity; Flatbed (Dual Rear Axle); Grease Truck, Fuel Truck, Greaser, Battery Service Man and/or Tire Service Man; Leverman and loader at bunkers and batch plants; Oil tank transport; Scissor truck; Slurry Truck; Sno-Go and similar equipment; Swampers; Straddler Carrier (Ross, Hyster) and similar equipment; Team Driver; Tractor (small, rubber-tired)(when used within Teamster jurisdiction); Vacuum truck; Water Wagon and Tank trucks-less than 3,000 gallons capacity; Winch Truck; Wrecker, Tow truck and similar equipment

GROUP 3 - Flatbed (single rear axle); Pickup Sweeper; Pickup Truck. (Adjust Group 3 upward by $2.00 per hour for onsite work only)

GROUP 4 - Escort or Pilot Car

GROUP 5 - Mechanic

HAZMAT PROJECTS

Anyone working on a HAZMAT job where HAZMAT certification is required, shall be compensated as a premium, in addition to the classification working in as follows:
LEVEL C: +$.25 per hour - This level uses an air purifying respirator or additional protective clothing.
LEVEL B: +$.50 per hour - Uses same respirator protection as Level A. Supplied air line is provided in conjunction with a chemical "splash suit."
LEVEL A: +$.75 per hour - This level utilizes a fully-encapsulated suit with a self-contained breathing apparatus or a supplied air line.

INFORMATIONAL COPY ONLY - NOT FOR BIDDING

TEAM0690-004 01/01/2014

ADAMS, ASOTIN, BENTON, CHELAN, COLUMBIA, DOUGLAS, FERRY, FRANKLIN, GARFIELD, GRANT KITTITAS, LINCOLN, OKANOGAN, PEND OREILLE, SPOKANE, STEVENS, WALLA WALLA, WHITMAN AND YAKIMA COUNTIES

	Rates	Fringes
Truck drivers: (AREA 1: SPOKANE ZONE CENTER: Adams,Chelan, Douglas, Ferry, Grant, Kittitas, Lincoln, Okanogan, Pen Oreille, Spokane, Stevens, and Whitman Counties		
AREA 1: LEWISTON ZONE CENTER: Asotin, Columbia, and Garfield Counties		
AREA 2: PASCO ZONE CENTER: Benton, Franklin, Walla Walla and Yakima Counties)		
AREA 1:		
GROUP 1	$ 20.17	15.19
GROUP 2	$ 22.44	15.19
GROUP 3	$ 22.94	15.19
GROUP 4	$ 23.27	15.19
GROUP 5	$ 23.38	15.19
GROUP 6	$ 23.55	15.19
GROUP 7	$ 24.08	15.19
GROUP 8	$ 24.44	15.19
AREA 2		
GROUP 1	$ 21.77	15.19
GROUP 2	$ 24.31	15.19
GROUP 3	$ 24.42	15.19
GROUP 4	$ 24.75	15.19
GROUP 5	$ 24.86	15.19
GROUP 6	$ 25.02	15.19
GROUP 7	$ 25.56	15.19
GROUP 8	$ 25.88	15.19

Zone Differential (Add to Zone 1 rate: Zone 2 + $2.00)

BASE POINTS: Spokane, Pasco, Lewiston
Zone 1: 0-45 radius miles from the main post office.
Zone 2: Outside 45 radius miles from the main post office

TRUCK DRIVERS CLASSIFICATIONS

GROUP 1: Escort Driver or Pilot Car; Employee Haul; Power Boat Hauling Employees or Material

GROUP 2: Fish Truck; Flat Bed Truck; Fork Lift (3000 lbs. and under); Leverperson (loading trucks at bunkers); Trailer Mounted Hydro Seeder and Mulcher; Seeder & Mulcher; Stationary Fuel Operator; Tractor (small, rubber-tired, pulling trailer or similar equipment)

INFORMATIONAL COPY ONLY - NOT FOR BIDDING

GROUP 3: Auto Crane (2000 lbs. capacity); Buggy Mobile & Similar; Bulk Cement Tanks & Spreader; Dumptor (6 yds. & under); Flat Bed Truck with Hydraullic System; Fork Lift (3001-16,000 lbs.); Fuel Truck Driver, Steamcleaner & Washer; Power Operated Sweeper; Rubber-tired Tunnel Jumbo; Scissors Truck; Slurry Truck Driver; Straddle Carrier (Ross, Hyster, & similar); Tireperson; Transit Mixers & Truck Hauling Concrete (3 yd. to & including 6 yds.); Trucks, side, end, bottom & articulated end dump (3 yards to and including 6 yds.); Warehouseperson (to include shipping & receiving); Wrecker & Tow Truck

GROUP 4: A-Frame; Burner, Cutter, & Welder; Service Greaser; Trucks, side, end, bottom & articulated end dump (over 6 yards to and including 12 yds.); Truck Mounted Hydro Seeder; Warehouseperson; Water Tank truck (0-8,000 gallons)

GROUP 5: Dumptor (over 6 yds.); Lowboy (50 tons & under); Self- loading Roll Off; Semi-Truck & Trailer; Tractor with Steer Trailer; Transit Mixers and Trucks Hauling Concrete (over 6 yds. to and including 10 yds.); Trucks, side, end, bottom and end dump (over 12 yds. to & including 20 yds.); Truck-Mounted Crane (with load bearing surface either mounted or pulled, up to 14 ton); Vacuum Truck (super sucker, guzzler, etc.)

GROUP 6: Flaherty Spreader Box Driver; Flowboys; Fork Lift (over 16,000 lbs.); Dumps (Semi-end); Mechanic (Field); Semi- end Dumps; Transfer Truck & Trailer; Transit Mixers & Trucks Hauling Concrete (over 10 yds. to & including 20 yds.); Trucks, side, end, bottom and articulated end dump (over 20 yds. to & including 40 yds.); Truck and Pup; Tournarocker, DWs & similar with 2 or more 4 wheel-power tractor with trailer, gallonage or yardage scale, whichever is greater Water Tank Truck (8,001- 14,000 gallons); Lowboy(over 50 tons)

GROUP 7: Oil Distributor Driver; Stringer Truck (cable oeprated trailer); Transit Mixers & Trucks Hauling Concrete (over 20 yds.); Truck, side, end, bottom end dump (over 40 yds. to & including 100 yds.); Truck Mounted Crane (with load bearing surface either mounted or pulled (16 through 25 tons)

GROUP 8: Prime Movers and Stinger Truck; Trucks, side, end, bottom and articulated end dump (over 100 yds.); Helicopter Pilot Hauling Employees or Materials

Footnote A - Anyone working on a HAZMAT job, where HAZMAT certification is required, shall be compensated as a premium, in additon to the classification working in as follows:

LEVEL C-D: - $.50 PER HOUR (This is the lowest level of protection. This level may use an air purifying respirator or additional protective clothing.

INFORMATIONAL COPY ONLY - NOT FOR BIDDING

LEVEL A-B: - $1.00 PER HOUR (Uses supplied air is conjunction with a chemical spash suit or fully encapsulated suit with a self-contained breathing apparatus.

Employees shall be paid Hazmat pay in increments of four(4) and eight(8) hours.

NOTE:
Trucks Pulling Equipment Trailers: shall receive $.15/hour over applicable truck rate

---

WELDERS - Receive rate prescribed for craft performing operation to which welding is incidental.

==========

Unlisted classifications needed for work not included within the scope of the classifications listed may be added after award only as provided in the labor standards contract clauses (29CFR 5.5 (a) (1) (ii)).

The body of each wage determination lists the classification and wage rates that have been found to be prevailing for the cited type(s) of construction in the area covered by the wage determination. The classifications are listed in alphabetical order of "identifiers" that indicate whether the particular rate is union or non-union.

Union Identifiers

An identifier enclosed in dotted lines beginning with characters other than "SU" denotes that the union classification and rate have found to be prevailing for that classification. Example: PLUM0198-005 07/01/2011. The first four letters , PLUM, indicate the international union and the four-digit number, 0198, that follows indicates the local union number or district council number where applicable , i.e., Plumbers Local 0198. The next number, 005 in the example, is an internal number used in processing the wage determination. The date, 07/01/2011, following these characters is the effective date of the most current negotiated rate/collective bargaining agreement which would be July 1, 2011 in the above example.

Union prevailing wage rates will be updated to reflect any changes in the collective bargaining agreements governing the rates.

0000/9999: weighted union wage rates will be published annually each January.

INFORMATIONAL COPY ONLY - NOT FOR BIDDING

Non-Union Identifiers

Classifications listed under an "SU" identifier were derived from survey data by computing average rates and are not union rates; however, the data used in computing these rates may include both union and non-union data. Example: SULA2004-007 5/13/2010. SU indicates the rates are not union majority rates, LA indicates the State of Louisiana; 2004 is the year of the survey; and 007 is an internal number used in producing the wage determination. A 1993 or later date, 5/13/2010, indicates the classifications and rates under that identifier were issued as a General Wage Determination on that date.

Survey wage rates will remain in effect and will not change until a new survey is conducted.

WAGE DETERMINATION APPEALS PROCESS

1.) Has there been an initial decision in the matter? This can be:

* an existing published wage determination
* a survey underlying a wage determination
* a Wage and Hour Division letter setting forth a position on a wage determination matter
* a conformance (additional classification and rate) ruling

On survey related matters, initial contact, including requests for summaries of surveys, should be with the Wage and Hour Regional Office for the area in which the survey was conducted because those Regional Offices have responsibility for the Davis-Bacon survey program. If the response from this initial contact is not satisfactory, then the process described in 2.) and 3.) should be followed.

With regard to any other matter not yet ripe for the formal process described here, initial contact should be with the Branch of Construction Wage Determinations. Write to:

Branch of Construction Wage Determinations
Wage and Hour Division
U.S. Department of Labor
200 Constitution Avenue, N.W.
Washington, DC 20210

2.) If the answer to the question in 1.) is yes, then an interested party (those affected by the action) can request review and reconsideration from the Wage and Hour Administrator (See 29 CFR Part 1.8 and 29 CFR Part 7). Write to:

Wage and Hour Administrator
U.S. Department of Labor
200 Constitution Avenue, N.W.
Washington, DC 20210

INFORMATIONAL COPY ONLY - NOT FOR BIDDING

The request should be accompanied by a full statement of the interested party's position and by any information (wage payment data, project description, area practice material, etc.) that the requestor considers relevant to the issue.

3.) If the decision of the Administrator is not favorable, an interested party may appeal directly to the Administrative Review Board (formerly the Wage Appeals Board). Write to:

Administrative Review Board
U.S. Department of Labor
200 Constitution Avenue, N.W.
Washington, DC 20210

4.) All decisions by the Administrative Review Board are final.

==========

END OF GENERAL DECISION

INFORMATIONAL COPY ONLY - NOT FOR BIDDING

INFORMATIONAL COPY ONLY - NOT FOR BIDDING

State of Washington
Department of Labor & Industries

Prevailing Wage Section - Telephone 360-902-5335
PO Box 44540, Olympia, WA 98504-4540

Washington State Prevailing Wage

The PREVAILING WAGES listed here include both the hourly wage rate and the hourly rate of fringe benefits. On public works projects, worker's wage and benefit rates must add to not less than this total. A brief description of overtime calculation requirements are provided on the Benefit Code Key.

Journey Level Prevailing Wage Rates for the Effective Date: 8/28/2014

INFORMATIONAL COPY ONLY - NOT FOR BIDDING

County	Trade	Job Classification	Wage	Holiday	Overtime	Note
Grant	Cement Masons	Journey Level	$38.15	7B	1N	
Grant	Flaggers	Journey Level	$32.71	7B	1M	
Grant	Laborers	Air And Hydraulic Track Drill	$35.35	7B	1M	
Grant	Laborers	Asphalt Raker	$35.35	7B	1M	
Grant	Laborers	Asphalt Roller, Walking	$35.08	7B	1M	
Grant	Laborers	Brick Pavers	$34.81	7B	1M	
Grant	Laborers	Brush Hog Feeder	$34.81	7B	1M	
Grant	Laborers	Brush Machine	$35.35	7B	1M	
Grant	Laborers	Caisson Worker, Free Air	$35.35	7B	1M	
Grant	Laborers	Carpenter Tender	$34.81	7B	1M	
Grant	Laborers	Cement Finisher Tender	$35.08	7B	1M	
Grant	Laborers	Cement Handler	$34.81	7B	1M	
Grant	Laborers	Chain Saw Operator & Faller	$35.35	7B	1M	
Grant	Laborers	Clean-up Laborer	$34.81	7B	1M	
Grant	Laborers	Compaction Equipment	$35.08	7B	1M	
Grant	Laborers	Concrete Crewman	$34.81	7B	1M	
Grant	Laborers	Concrete Saw, Walking	$35.08	7B	1M	
Grant	Laborers	Concrete Signalman	$34.81	7B	1M	
Grant	Laborers	Concrete Stack	$35.35	7B	1M	
Grant	Laborers	Confined Space Attendant	$34.81	7B	1M	
Grant	Laborers	Crusher Feeder	$34.81	7B	1M	
Grant	Laborers	Demolition	$34.81	7B	1M	
Grant	Laborers	Demolition Torch	$35.08	7B	1M	
Grant	Laborers	Dope Pot Fireman, Non-mechanical	$35.08	7B	1M	
Grant	Laborers	Driller Helper (when Required To Move & Position Machine)	$35.08	7B	1M	
Grant	Laborers	Drills With Dual Masts	$35.63	7B	1M	
Grant	Laborers	Dry Stack Walls	$34.81	7B	1M	
Grant	Laborers	Dumpman	$34.81	7B	1M	

Grant	Laborers	Erosion Control Laborer	$34.81	7B	1M	
Grant	Laborers	Final Detail Cleanup (i.e., Dusting, Vacuuming, Window Cleaning; Not Construction Debris Cleanup)	$32.71	7B	1M	
Grant	Laborers	Firewatch	$34.81	7B	1M	
Grant	Laborers	Form Cleaning Machine Feeder, Stacker	$34.81	7B	1M	
Grant	Laborers	Form Setter, Paving	$35.08	7B	1M	
Grant	Laborers	General Laborer	$34.81	7B	1M	
Grant	Laborers	Grade Checker	$37.34	7B	1M	
Grant	Laborers	Grout Machine Header Tender	$34.81	7B	1M	
Grant	Laborers	Guard Rail	$34.81	7B	1M	
Grant	Laborers	Gunite	$35.35	7B	1M	
Grant	Laborers	Hazardous Waste Worker (level A)	$35.63	7B	1M	
Grant	Laborers	Hazardous Waste Worker (level B)	$35.35	7B	1M	
Grant	Laborers	Hazardous Waste Worker (level C)	$35.08	7B	1M	
Grant	Laborers	Hazardous Waste Worker (level D)	$34.81	7B	1M	
Grant	Laborers	Hdpe Or Similar Liner Installer	$34.81	7B	1M	
Grant	Laborers	High Scaler	$35.35	7B	1M	
Grant	Laborers	Jackhammer Operator Miner, Class "b"	$35.08	7B	1M	
Grant	Laborers	Laser Beam Operator	$35.35	7B	1M	
Grant	Laborers	Miner, Class "a"	$34.81	7B	1M	
Grant	Laborers	Miner, Class "c"	$35.35	7B	1M	
Grant	Laborers	Miner, Class "d"	$35.63	7B	1M	
Grant	Laborers	Monitor Operator, Air Track Or Similar Mounting	$35.35	7B	1M	
Grant	Laborers	Mortar Mixer	$35.35	7B	1M	
Grant	Laborers	Nipper	$34.81	7B	1M	
Grant	Laborers	Nozzleman	$35.35	7B	1M	
Grant	Laborers	Nozzleman, Water (to Include Fire Hose), Air Or Steam	$35.08	7B	1M	
Grant	Laborers	Pavement Breaker, 90 Lbs. & Over	$35.35	7B	1M	
Grant	Laborers	Pavement Breaker, Under 90 Lbs.	$35.08	7B	1M	
Grant	Laborers	Pipelayer	$35.35	7B	1M	
Grant	Laborers	Pipelayer, Corrugated Metal Culvert And Multi-plate	$35.08	7B	1M	
Grant	Laborers	Pipewrapper	$35.35	7B	1M	
Grant	Laborers	Plasterer Tenders	$35.35	7B	1M	
Grant	Laborers	Pot Tender	$35.08	7B	1M	
Grant	Laborers	Powderman	$37.00	7B	1M	

INFORMATIONAL COPY ONLY - NOT FOR BIDDING

Grant	Laborers	Powderman Helper	$35.08	7B	1M	
Grant	Laborers	Power Buggy Operator	$35.08	7B	1M	
Grant	Laborers	Power Tool Operator, Gas, Electric, Pneumatic	$35.08	7B	1M	
Grant	Laborers	Railroad Equipment, Power Driven, Except Dual Mobile	$35.08	7B	1M	
Grant	Laborers	Railroad Power Spiker Or Puller, Dual Mobile	$35.08	7B	1M	
Grant	Laborers	Remote Equipment Operator	$35.63	7B	1M	
Grant	Laborers	Remote Equipment Operator (i.e. Compaction And Demolition)	$35.08	7B	1M	
Grant	Laborers	Rigger/signal Person	$35.08	7B	1M	
Grant	Laborers	Riprap Person	$34.81	7B	1M	
Grant	Laborers	Rodder & Spreader	$35.08	7B	1M	
Grant	Laborers	Sandblast Tailhoseman	$34.81	7B	1M	
Grant	Laborers	Scaffold Erector, Wood Or Steel	$34.81	7B	1M	
Grant	Laborers	Stake Jumper	$34.81	7B	1M	
Grant	Laborers	Structural Mover	$34.81	7B	1M	
Grant	Laborers	Tailhoseman (water Nozzle)	$34.81	7B	1M	
Grant	Laborers	Timber Bucker & Faller (by Hand)	$34.81	7B	1M	
Grant	Laborers	Track Laborer (rr)	$34.81	7B	1M	
Grant	Laborers	Traffic Control Laborer	$32.71	7B	1M	8T
Grant	Laborers	Traffic Control Supervisor	$33.71	7B	1M	8S
Grant	Laborers	Trencher, Shawnee	$35.08	7B	1M	
Grant	Laborers	Trenchless Technology Technician	$35.35	7B	1M	
Grant	Laborers	Truck Loader	$34.81	7B	1M	
Grant	Laborers	Tugger Operator	$35.08	7B	1M	
Grant	Laborers	Vibrators, All	$35.35	7B	1M	
Grant	Laborers	Wagon Drills	$35.08	7B	1M	
Grant	Laborers	Water Pipe Liner	$35.08	7B	1M	
Grant	Laborers	Welder, Electric, Manual Or Automatic (hdpe Or Similar Pipe And Liner)	$35.63	7B	1M	
Grant	Laborers	Well-point Person	$34.81	7B	1M	
Grant	Laborers	Wheelbarrow, Power Driven	$35.08	7B	1M	
Grant	Power Equipment Operators	A-frame Truck (2 Or More Drums)	$39.34	7B	1M	8D
Grant	Power Equipment Operators	A-frame Truck (single Drum)	$38.73	7B	1M	8D
Grant	Power Equipment Operators	Asphalt Plant Operator	$39.94	7B	1M	8D
Grant	Power Equipment Operators	Assistant Plant Operator, Fireman Or Pugmixer (asphalt)	$38.73	7B	1M	8D
Grant	Power Equipment Operators	Assistant Refrigeration Plant & Chiller Operator (over 1000 Ton)	$39.34	7B	1M	8D

INFORMATIONAL COPY ONLY - NOT FOR BIDDING

Grant	Power Equipment Operators	Assistant Refrigeration Plant (under 1000 Ton)	$38.73	7B	1M	8D
Grant	Power Equipment Operators	Automatic Subgrader (ditches & Trimmers)	$39.94	7B	1M	8D
Grant	Power Equipment Operators	Backfillers (cleveland & Similar)	$39.34	7B	1M	8D
Grant	Power Equipment Operators	Backhoe & Hoe Ram (under 3/4 Yd.)	$39.66	7B	1M	8D
Grant	Power Equipment Operators	Backhoe (45,000 Gw & Under)	$39.66	7B	1M	8D
Grant	Power Equipment Operators	Backhoe (45,000 Gw To 110,000 Gw)	$39.94	7B	1M	8D
Grant	Power Equipment Operators	Backhoe (over 110,000 Gw)	$40.21	7B	1M	8D
Grant	Power Equipment Operators	Backhoes & Hoe Ram (3 Yds & Over)	$40.21	7B	1M	8D
Grant	Power Equipment Operators	Backhoes & Hoe Ram (3/4 Yd. To 3 Yd.)	$39.94	7B	1M	8D
Grant	Power Equipment Operators	Bagley Or Stationary Scraper	$38.73	7B	1M	8D
Grant	Power Equipment Operators	Batch & Wet Mix Operator (multiple Units, 2 & Incl. 4)	$39.94	7B	1M	8D
Grant	Power Equipment Operators	Batch Plant & Wet Mix Operator, Single Unit (concrete)	$39.34	7B	1M	8D
Grant	Power Equipment Operators	Batch Plant (over 4 Units)	$39.94	7B	1M	8D
Grant	Power Equipment Operators	Belt Finishing Machine	$38.73	7B	1M	8D
Grant	Power Equipment Operators	Belt Loader (kocat Or Similar)	$39.34	7B	1M	8D
Grant	Power Equipment Operators	Belt-crete Conveyors With Power Pack Or Similar	$39.34	7B	1M	8D
Grant	Power Equipment Operators	Bending Machine	$39.34	7B	1M	8D
Grant	Power Equipment Operators	Bit Grinders	$38.41	7B	1M	8D
Grant	Power Equipment Operators	Blade (finish & Bluetop), Automatic, Cmi, Abc, Finish Athey & Huber & Similar When Used As Automatic	$40.21	7B	1M	8D
Grant	Power Equipment Operators	Blade Operator (motor Patrol & Attachments)	$39.94	7B	1M	8D
Grant	Power Equipment Operators	Blower Operator (cement)	$38.73	7B	1M	8D
Grant	Power Equipment Operators	Boat Operator	$38.41	7B	1M	8D
Grant	Power Equipment Operators	Bob Cat (skid Steer)	$39.34	7B	1M	8D
Grant	Power Equipment Operators	Bolt Threading Machine	$38.41	7B	1M	8D
Grant	Power Equipment Operators	Boom Cats (side)	$39.94	7B	1M	8D
Grant	Power Equipment Operators	Boring Machine (earth)	$39.34	7B	1M	8D
Grant	Power Equipment Operators	Boring Machine (Rock Under 8" Bit - Quarry Master, Joy Or Similar)	$39.34	7B	1M	8D
Grant	Power Equipment Operators	Bump Cutter (wayne, Saginau Or Similar)	$39.34	7B	1M	8D
Grant	Power Equipment Operators	Cableway Controller (dispatcher)	$39.94	7B	1M	8D
Grant	Power Equipment Operators	Cableway Operators	$40.21	7B	1M	8D
Grant	Power Equipment Operators		$39.34	7B	1M	8D

INFORMATIONAL COPY ONLY - NOT FOR BIDDING

		Canal Lining Machine (concrete)				
Grant	Power Equipment Operators	Carrydeck & Boom Truck (under 25 Tons)	$39.66	7B	1M	8D
Grant	Power Equipment Operators	Cement Hog	$38.73	7B	1M	8D
Grant	Power Equipment Operators	Chipper (without Crane) Cleaning & Doping Machine (pipeline)	$39.34	7B	1M	8D
Grant	Power Equipment Operators	Clamshell, Dragline	$41.31	7B	1M	8D
Grant	Power Equipment Operators	Compactor (self-propelled With Blade)	$39.94	7B	1M	8D
Grant	Power Equipment Operators	Compressor (2000 Cfm Or Over, 2 Or More, Gas Diesel Or Electric Power)	$38.73	7B	1M	8D
Grant	Power Equipment Operators	Compressors (under 2000 Cfm, Gas, Diesel Or Electric Power)	$38.41	7B	1M	8D
Grant	Power Equipment Operators	Concrete Cleaning / Decontamination Machine Operator	$40.21	7B	1M	8D
Grant	Power Equipment Operators	Concrete Pump Boon Truck	$39.94	7B	1M	8D
Grant	Power Equipment Operators	Concrete Pumps (squeeze crete, Flow-crete, Whitman & Similar)	$39.50	7B	1M	8D
Grant	Power Equipment Operators	Concrete Saw (multiple Cut)	$38.73	7B	1M	8D
Grant	Power Equipment Operators	Concrete Slip Form Paver	$39.94	7B	1M	8D
Grant	Power Equipment Operators	Conveyor Aggregate Delivery Systems (c.a.d.)	$39.94	7B	1M	8D
Grant	Power Equipment Operators	Crane Oiler- Driver (cdl Required) & Cable Tender, Mucking Machine	$38.41	7B	1M	8D
Grant	Power Equipment Operators	Cranes (25 Tons & Under), All Attachments Incl. Clamshell, Dragline	$39.66	7B	1M	8D
Grant	Power Equipment Operators	Cranes (25 Tons To And Including 45 Tons), All Attachments Incl. Clamshell, Dragline	$39.94	7B	1M	8D
Grant	Power Equipment Operators	Cranes (45 Tons To 85 Tons), All Attachments Incl. Clamshell And Dragline	$40.21	7B	1M	8D
Grant	Power Equipment Operators	Cranes (85 Tons & Over) And All Climbing, Overhead, Rail & Tower. All Attachments Incl.	$41.31	7B	1M	8D
Grant	Power Equipment Operators	Crusher Feeder	$38.41	7B	1M	8D
Grant	Power Equipment Operators	Crusher, Grizzle & Screening Plant Operator	$39.94	7B	1M	8D
Grant	Power Equipment Operators	Curb Extruder (asphalt Or Concrete)	$39.50	7B	1M	8D
Grant	Power Equipment Operators	Deck Engineer	$39.34	7B	1M	8D
Grant	Power Equipment Operators	Deck Hand	$38.41	7B	1M	8D
Grant	Power Equipment Operators		$40.21	7B	1M	8D

INFORMATIONAL COPY ONLY - NOT FOR BIDDING

		Derricks & Stifflegs (65 Tons & Over)				
Grant	Power Equipment Operators	Derricks & Stifflegs (under 65 Tons)	$39.66	7B	1M	8D
Grant	Power Equipment Operators	Distributor Leverman	$38.73	7B	1M	8D
Grant	Power Equipment Operators	Ditch Witch Or Similar	$38.73	7B	1M	8D
Grant	Power Equipment Operators	Dope Pots (power Agitated	$38.73	7B	1M	8D
Grant	Power Equipment Operators	Dozer / Tractor (up To D-6 Or Equivalent) And Traxcavator	$39.34	7B	1M	8D
Grant	Power Equipment Operators	Dozer / Tractors (d-6 & Equivalent & Over)	$39.94	7B	1M	8D
Grant	Power Equipment Operators	Dozer, 834 R/t & Similar	$39.94	7B	1M	8D
Grant	Power Equipment Operators	Drill Doctor	$39.94	7B	1M	8D
Grant	Power Equipment Operators	Driller Licensed	$41.31	7B	1M	8D
Grant	Power Equipment Operators	Drillers Helper	$38.41	7B	1M	8D
Grant	Power Equipment Operators	Drilling Equipment (8" Bit & Over - Robbins, Reverse Circulation & Similar)	$39.66	7B	1M	8D
Grant	Power Equipment Operators	Drills (churn, Core, Calyx Or Diamond)	$39.50	7B	1M	8D
Grant	Power Equipment Operators	Elevating Belt (holland Type)	$40.21	7B	1M	8D
Grant	Power Equipment Operators	Elevating Belt-type Loader (euclid, Barber Green & Similar)	$39.34	7B	1M	8D
Grant	Power Equipment Operators	Elevating Grader-type Loader (dumor, Adams Or Similar)	$39.34	7B	1M	8D
Grant	Power Equipment Operators	Elevator Hoisting Materials	$38.73	7B	1M	8D
Grant	Power Equipment Operators	Equipment Serviceman, Greaser & Oiler	$39.50	7B	1M	8D
Grant	Power Equipment Operators	Fireman & Heater Tender	$38.41	7B	1M	8D
Grant	Power Equipment Operators	Fork Lift Or Lumber Stacker, Hydra-life & Similar	$38.73	7B	1M	8D
Grant	Power Equipment Operators	Generator Plant Engineers (diesel Or Electric)	$39.34	7B	1M	8D
Grant	Power Equipment Operators	Gin Trucks (pipeline)	$38.73	7B	1M	8D
Grant	Power Equipment Operators	Grade Checker	$39.66	7B	1M	8D
Grant	Power Equipment Operators	Gunite Combination Mixer & Compressor	$39.34	7B	1M	8D
Grant	Power Equipment Operators	H.d. Mechanic	$40.21	7B	1M	8D
Grant	Power Equipment Operators	H.d. Welder	$40.21	7B	1M	8D
Grant	Power Equipment Operators	Helicopter Pilot	$41.31	7B	1M	8D
Grant	Power Equipment Operators	Helper, Mechanic Or Welder, H.D	$38.41	7B	1M	8D
Grant	Power Equipment Operators	Hoe Ram	$39.66	7B	1M	8D
Grant	Power Equipment Operators	Hoist (2 Or More Drums Or Tower Hoist)	$39.50	7B	1M	8D
Grant	Power Equipment Operators	Hoist, Single Drum	$38.73	7B	1M	8D
Grant	Power Equipment Operators		$40.21	7B	1M	8D

INFORMATIONAL COPY ONLY - NOT FOR BIDDING

		Hydraulic Platform Trailers (goldhofer, Shaurerly And Similar)				
Grant	Power Equipment Operators	Hydro-seeder, Mulcher, Nozzleman	$38.41	7B	1M	8D
Grant	Power Equipment Operators	Lime Batch Tank Operator (recycle Train)	$39.94	7B	1M	8D
Grant	Power Equipment Operators	Lime Brain Operator (recycle Train)	$39.94	7B	1M	8D
Grant	Power Equipment Operators	Loader (360 Degrees Revolving Koehring Scooper Or Similar)	$40.21	7B	1M	8D
Grant	Power Equipment Operators	Loader Operator (front-end & Overhead, 4 Yds. Incl. 8 Yds.)	$39.94	7B	1M	8D
Grant	Power Equipment Operators	Loaders (bucket Elevators And Conveyors)	$38.73	7B	1M	8D
Grant	Power Equipment Operators	Loaders (overhead & Front-end, Over 8 Yds. To 10 Yds.)	$40.21	7B	1M	8D
Grant	Power Equipment Operators	Loaders (overhead & Front-end, Under 4 Yds.. R/t)	$39.50	7B	1M	8D
Grant	Power Equipment Operators	Loaders (overhead And Front-end, 10 Yds. & Over)	$41.31	7B	1M	8D
Grant	Power Equipment Operators	Locomotive Engineer	$39.34	7B	1M	8D
Grant	Power Equipment Operators	Longitudinal Float	$38.73	7B	1M	8D
Grant	Power Equipment Operators	Master Environmental Maintenance Technician	$40.21	7B	1M	8D
Grant	Power Equipment Operators	Mixer (portable - Concrete)	$38.73	7B	1M	8D
Grant	Power Equipment Operators	Mixermobile	$39.34	7B	1M	8D
Grant	Power Equipment Operators	Mobile Crusher Operator (recycle Train)	$39.94	7B	1M	8D
Grant	Power Equipment Operators	Mucking Machine	$39.34	7B	1M	8D
Grant	Power Equipment Operators	Multiple Dozer Units With Single Blade	$39.94	7B	1M	8D
Grant	Power Equipment Operators	Pavement Breaker, Hydra-hammer & Similar	$38.73	7B	1M	8D
Grant	Power Equipment Operators	Paving (dual Drum)	$39.66	7B	1M	8D
Grant	Power Equipment Operators	Paving Machine (asphalt And Concrete)	$39.94	7B	1M	8D
Grant	Power Equipment Operators	Piledriving Engineers	$39.66	7B	1M	8D
Grant	Power Equipment Operators	Plant Oiler	$38.41	7B	1M	8D
Grant	Power Equipment Operators	Posthole Auger Or Punch	$39.34	7B	1M	8D
Grant	Power Equipment Operators	Power Broom	$38.73	7B	1M	8D
Grant	Power Equipment Operators	Pump (grout Or Jet)	$39.34	7B	1M	8D
Grant	Power Equipment Operators	Pumpman	$38.41	7B	1M	8D
Grant	Power Equipment Operators	Quad-track Or Similar Equipment	$39.94	7B	1M	8D
Grant	Power Equipment Operators	Railroad Ballast Regulation Operator (self-propelled)	$38.73	7B	1M	8D
Grant	Power Equipment Operators	Railroad Power Tamper Operator (self-propelled)	$38.73	7B	1M	8D
Grant	Power Equipment Operators		$38.73	7B	1M	8D

INFORMATIONAL COPY ONLY - NOT FOR BIDDING

		Railroad Tamper Jack Operator (self-propelled)				
Grant	Power Equipment Operators	Railroad Track Liner Operator (self-propelled)	$39.66	7B	1M	8D
Grant	Power Equipment Operators	Refrigeration Plant Engineer (1000 Tons & Over)	$39.66	7B	1M	8D
Grant	Power Equipment Operators	Refrigeration Plant Engineer (under 1000 Ton)	$39.50	7B	1M	8D
Grant	Power Equipment Operators	Rollerman (finishing Asphalt Pavement)	$39.94	7B	1M	8D
Grant	Power Equipment Operators	Rollers, All Types On Subgrade, Including Seal And Chip Coating (farm Type, Case, John Deere And Similar,or Compacting Vibrator), Except When Pulled B	$38.41	7B	1M	8D
Grant	Power Equipment Operators	Roto Mill (pavement Grinder)	$39.94	7B	1M	8D
Grant	Power Equipment Operators	Rotomill Groundsman	$39.50	7B	1M	8D
Grant	Power Equipment Operators	Rubber-tired Scrapers (multiple Engine With Three Or More Scrapers)	$40.21	7B	1M	8D
Grant	Power Equipment Operators	Rubber-tired Skidders (r/t With Or Without Attachments)	$39.50	7B	1M	8D
Grant	Power Equipment Operators	Scrapers, All, Rubber-tired	$39.94	7B	1M	8D
Grant	Power Equipment Operators	Screed Operator	$39.94	7B	1M	8D
Grant	Power Equipment Operators	Shovels (3 Yds. & Over)	$40.21	7B	1M	8D
Grant	Power Equipment Operators	Shovels (under 3 Yds.)	$39.94	7B	1M	8D
Grant	Power Equipment Operators	Signalman (whirleys, Highline, Hammerheads Or Similar)	$39.66	7B	1M	8D
Grant	Power Equipment Operators	Soil Stabilizer (p & H Or Similar)	$39.34	7B	1M	8D
Grant	Power Equipment Operators	Spray Curing Machine (concrete)	$38.73	7B	1M	8D
Grant	Power Equipment Operators	Spreader Box (self-propelled)	$38.73	7B	1M	8D
Grant	Power Equipment Operators	Spreader Machine	$39.34	7B	1M	8D
Grant	Power Equipment Operators	Steam Cleaner	$38.41	7B	1M	8D
Grant	Power Equipment Operators	Straddle Buggy (ross & Similar On Construction Job Only)	$38.73	7B	1M	8D
Grant	Power Equipment Operators	Surface Heater & Planer Machine	$39.50	7B	1M	8D
Grant	Power Equipment Operators	Tractor (farm Type R/t With Attachments, Except Backhoe)	$38.73	7B	1M	8D
Grant	Power Equipment Operators	Traverse Finish Machine	$39.34	7B	1M	8D
Grant	Power Equipment Operators	Trenching Machines (7 Ft. Depth & Over)	$39.94	7B	1M	8D
Grant	Power Equipment Operators	Trenching Machines (under 7 Ft. Depth Capacity)	$39.50	7B	1M	8D
Grant	Power Equipment Operators	Tug Boat Operator	$39.94	7B	1M	8D
Grant	Power Equipment Operators	Tugger Operator	$38.73	7B	1M	8D

INFORMATIONAL COPY ONLY - NOT FOR BIDDING

Grant	Power Equipment Operators	Turnhead (with Re-screening)	$39.50	7B	1M	8D
Grant	Power Equipment Operators	Turnhead Operator	$39.34	7B	1M	8D
Grant	Power Equipment Operators	Ultra High Pressure Wateriet Cutting Tool System Operator, (30,000 Psi)	$40.21	7B	1M	8D
Grant	Power Equipment Operators	Vactor Guzzler, Super Sucker	$39.94	7B	1M	8D
Grant	Power Equipment Operators	Vacuum Blasting Machine Operator	$40.21	7B	1M	8D
Grant	Power Equipment Operators	Vacuum Drill (reverse Circulation Drill Under 8" Bit)	$39.50	7B	1M	8D
Grant	Power Equipment Operators	Welding Machine	$38.41	7B	1M	8D
Grant	Power Equipment Operators	Whirleys & Hammerheads, All	$40.21	7B	1M	8D
Grant	Surveyors	All Classifications	$28.57	Null	1	
Grant	Traffic Control Stripers	Journey Level	$42.33	7A	1K	
Grant	Truck Drivers	Dump Truck	$26.09		1	
Grant	Truck Drivers	Dump Truck And Trailer	$26.09		1	
Grant	Truck Drivers	Other Trucks	$27.84		1	
Grant	Truck Drivers	Transit Mixer	$10.00		1	

INFORMATIONAL COPY ONLY - NOT FOR BIDDING

INFORMATIONAL COPY ONLY - NOT FOR BIDDING

****

Overtime Codes

Overtime calculations are based on the hourly rate actually paid to the worker. On public works projects, the hourly rate must be not less than the prevailing rate of wage minus the hourly rate of the cost of fringe benefits actually provided for the worker.

1. ALL HOURS WORKED IN EXCESS OF EIGHT (8) HOURS PER DAY OR FORTY (40) HOURS PER WEEK SHALL BE PAID AT ONE AND ONE-HALF TIMES THE HOURLY RATE OF WAGE.

B. All hours worked on Saturdays shall be paid at one and one-half times the hourly rate of wage. All hours worked on Sundays and holidays shall be paid at double the hourly rate of wage.

C. The first two (2) hours after eight (8) regular hours Monday through Friday and the first ten (10) hours on Saturday shall be paid at one and one-half times the hourly rate of wage. All other overtime hours and all hours worked on Sundays and holidays shall be paid at double the hourly rate of wage.

D. The first two (2) hours before or after a five-eight (8) hour workweek day or a four-ten (10) hour workweek day and the first eight (8) hours worked the next day after either workweek shall be paid at one and one-half times the hourly rate of wage. All additional hours worked and all worked on Sundays and holidays shall be paid at double the hourly rate of wage.

E. The first two (2) hours after eight (8) regular hours Monday through Friday and the first eight (8) hours on Saturday shall be paid at one and one-half times the hourly rate of wage. All other hours worked Monday through Saturday, and all hours worked on Sundays and holidays shall be paid at double the hourly rate of wage.

F. The first two (2) hours after eight (8) regular hours Monday through Friday and the first ten (10) hours on Saturday shall be paid at one and one-half times the hourly rate of wage. All other overtime hours worked, except Labor Day, shall be paid at double the hourly rate of wage. All hours worked on Labor Day shall be paid at three times the hourly rate of wage.

G. The first ten (10) hours worked on Saturdays and the first ten (10) hours worked on a fifth calendar weekday in a four-ten hour schedule, shall be paid at one and one-half times the hourly rate of wage. All hours worked in excess of ten (10) hours per day Monday through Saturday and all hours worked on Sundays and holidays shall be paid at double the hourly rate of wage.

H. All hours worked on Saturdays (except makeup days if work is lost due to inclement weather conditions or equipment breakdown) shall be paid at one and one-half times the hourly rate of wage. All hours worked Monday through Saturday over twelve (12) hours and all hours worked on Sundays and holidays shall be paid at double the hourly rate of wage.

I. All hours worked on Sundays and holidays shall also be paid at double the hourly rate of wage.

J. The first two (2) hours after eight (8) regular hours Monday through Friday and the first ten (10) hours on Saturday shall be paid at one and one-half times the hourly rate of wage. All hours worked over ten (10) hours Monday through Saturday, Sundays and holidays shall be paid at double the hourly rate of wage.

K. All hours worked on Saturdays and Sundays shall be paid at one and one-half times the hourly rate of wage. All hours worked on holidays shall be paid at double the hourly rate of wage.

M. All hours worked on Saturdays (except makeup days if work is lost due to inclement weather conditions) shall be paid at one and one-half times the hourly rate of wage. All hours worked on Sundays and holidays shall be paid at double the hourly rate of wage.

INFORMATIONAL COPY ONLY - NOT FOR BIDDING

1. N. All hours worked on Saturdays (except makeup days) shall be paid at one and one-half times the hourly rate of wage. All hours worked on Sundays and holidays shall be paid at double the hourly rate of wage.

O. The first ten (10) hours worked on Saturday shall be paid at one and one-half times the hourly rate of wage. All hours worked on Sundays, holidays and after twelve (12) hours, Monday through Friday and after ten (10) hours on Saturday shall be paid at double the hourly rate of wage.

P. All hours worked on Saturdays (except makeup days if circumstances warrant) and Sundays shall be paid at one and one-half times the hourly rate of wage. All hours worked on holidays shall be paid at double the hourly rate of wage.

Q. The first two (2) hours after eight (8) regular hours Monday through Friday and up to ten (10) hours worked on Saturdays shall be paid at one and one-half times the hourly rate of wage. All hours worked in excess of ten (10) hours per day Monday through Saturday and all hours worked on Sundays and holidays (except Christmas day) shall be paid at double the hourly rate of wage. All hours worked on Christmas day shall be paid at two and one-half times the hourly rate of wage.

R. All hours worked on Sundays and holidays shall be paid at two times the hourly rate of wage.

S. The first two (2) hours after eight (8) regular hours Monday through Friday and the first eight (8) hours on Saturday shall be paid at one and one-half times the hourly rate of wage. All hours worked on holidays and all other overtime hours worked, except Labor Day, shall be paid at double the hourly rate of wage. All hours worked on Labor Day shall be paid at three times the hourly rate of wage.

U. All hours worked on Saturdays shall be paid at one and one-half times the hourly rate of wage. All hours worked on Sundays and holidays (except Labor Day) shall be paid at two times the hourly rate of wage. All hours worked on Labor Day shall be paid at three times the hourly rate of wage.

V. All hours worked on Sundays and holidays (except Thanksgiving Day and Christmas day) shall be paid at one and one-half times the hourly rate of wage. All hours worked on Thanksgiving Day and Christmas day shall be paid at double the hourly rate of wage.

W. All hours worked on Saturdays and Sundays (except make-up days due to conditions beyond the control of the employer)) shall be paid at one and one-half times the hourly rate of wage. All hours worked on holidays shall be paid at double the hourly rate of wage.

X. The first four (4) hours after eight (8) regular hours Monday through Friday and the first twelve (12) hours on Saturday shall be paid at one and one-half times the hourly rate of wage. All hours worked over twelve (12) hours Monday through Saturday, Sundays and holidays shall be paid at double the hourly rate of wage. When holiday falls on Saturday or Sunday, the day before Saturday, Friday, and the day after Sunday, Monday, shall be considered the holiday and all work performed shall be paid at double the hourly rate of wage.

Y. All hours worked outside the hours of 5:00 am and 5:00 pm (or such other hours as may be agreed upon by any employer and the employee) and all hours worked in excess of eight (8) hours per day (10 hours per day for a 4 x 10 workweek) and on Saturdays and holidays (except labor day) shall be paid at one and one-half times the hourly rate of wage. (except for employees who are absent from work without prior approval on a scheduled workday during the workweek shall be paid at the straight-time rate until they have worked 8 hours in a day (10 in a 4 x 10 workweek) or 40 hours during that workweek.) All hours worked Monday through Saturday over twelve (12) hours and all hours worked on Sundays and Labor Day shall be paid at double the hourly rate of wage.

Z. All hours worked on Saturdays and Sundays shall be paid at one and one-half times the hourly rate of wage. All hours worked on holidays shall be paid the straight time rate of pay in addition to holiday pay.

INFORMATIONAL COPY ONLY - NOT FOR BIDDING

2. ALL HOURS WORKED IN EXCESS OF EIGHT (8) HOURS PER DAY OR FORTY (40) HOURS PER WEEK SHALL BE PAID AT ONE AND ONE-HALF TIMES THE HOURLY RATE OF WAGE.

B. All hours worked on holidays shall be paid at one and one-half times the hourly rate of wage.

C. All hours worked on Sundays shall be paid at one and one-half times the hourly rate of wage. All hours worked on holidays shall be paid at two times the hourly rate of wage.

F. The first eight (8) hours worked on holidays shall be paid at the straight hourly rate of wage in addition to the holiday pay. All hours worked in excess of eight (8) hours on holidays shall be paid at double the hourly rate of wage.

G. All hours worked on Sunday shall be paid at two times the hourly rate of wage. All hours worked on paid holidays shall be paid at two and one-half times the hourly rate of wage including holiday pay.

H. All hours worked on Sunday shall be paid at two times the hourly rate of wage. All hours worked on holidays shall be paid at one and one-half times the hourly rate of wage.

O. All hours worked on Sundays and holidays shall be paid at one and one-half times the hourly rate of wage.

R. All hours worked on Sundays and holidays and all hours worked over sixty (60) in one week shall be paid at double the hourly rate of wage.

U. All hours worked on Saturdays shall be paid at one and one-half times the hourly rate of wage. All hours worked over 12 hours in a day or on Sundays and holidays shall be paid at double the hourly rate of wage.

W. The first two (2) hours after eight (8) regular hours Monday through Friday and the first eight (8) hours on Saturday shall be paid at one and one-half times the hourly rate of wage. All other hours worked Monday through Saturday, and all hours worked on Sundays and holidays shall be paid at double the hourly rate of wage. On a four-day, ten-hour weekly schedule, either Monday thru Thursday or Tuesday thru Friday schedule, all hours worked after ten shall be paid at double the hourly rate of wage. The first eight (8) hours worked on the fifth day shall be paid at one and one-half times the hourly rate of wage. All other hours worked on the fifth, sixth, and seventh days and on holidays shall be paid at double the hourly rate of wage.

3. ALL HOURS WORKED IN EXCESS OF EIGHT (8) HOURS PER DAY OR FORTY (40) HOURS PER WEEK SHALL BE PAID AT ONE AND ONE-HALF TIMES THE HOURLY RATE OF WAGE.

A. Work performed in excess of eight (8) hours of straight time per day, or ten (10) hours of straight time per day when four ten (10) hour shifts are established, or forty (40) hours of straight time per week, Monday through Friday, or outside the normal shift, and all work on Saturdays shall be paid at time and one-half the straight time rate. Hours worked over twelve hours (12) in a single shift and all work performed after 6:00 pm Saturday to 6:00 am Monday and holidays shall be paid at double the straight time rate of pay. Any shift starting between the hours of 6:00 pm and midnight shall receive an additional one dollar ($1.00) per hour for all hours worked that shift. The employer shall have the sole discretion to assign overtime work to employees. Primary consideration for overtime work shall be given to employees regularly assigned to the work to be performed on overtime situations. After an employee has worked eight (8) hours at an applicable overtime rate, all additional hours shall be at the applicable overtime rate until such time as the employee has had a break of eight (8) hours or more.

INFORMATIONAL COPY ONLY - NOT FOR BIDDING

3. C. Work performed in excess of eight (8) hours of straight time per day, or ten (10) hours of straight time per day when four ten (10) hour shifts are established, or forty (40) hours of straight time per week, Monday through Friday, or outside the normal shift, and all work on Saturdays shall be paid at one and one-half times the hourly rate of wage. All work performed after 6:00 pm Saturday to 5:00 am Monday and Holidays shall be paid at double the hourly rate of wage. After an employee has worked eight (8) hours at an applicable overtime rate, all additional hours shall be at the applicable overtime rate until such time as the employee has had a break of eight (8) hours or more.

D. All hours worked between the hours of 6:00 pm and 6:00 am, Monday through Saturday, shall be paid at a premium rate of 15% over the hourly rate of wage. All other hours worked after 6:00 am on Saturdays, shall be paid at one and one-half times the hourly rate of wage. All hours worked on Sundays and holidays shall be paid at double the hourly rate of wage.

E. All hours worked Sundays and holidays shall be paid at double the hourly rate of wage. Each week, once 40 hours of straight time work is achieved, then any hours worked over 10 hours per day Monday through Saturday shall be paid at double the hourly wage rate.

F. All hours worked on Saturday shall be paid at one and one-half times the hourly rate of wage. All hours worked on Sunday shall be paid at two times the hourly rate of wage. All hours worked on paid holidays shall be paid at two and one-half times the hourly rate of wage including holiday pay.

H. All work performed on Sundays between March 16th and October 14th and all Holidays shall be compensated for at two (2) times the regular rate of pay. Work performed on Sundays between October 15th and March 15th shall be compensated at one and one half (1-1/2) times the regular rate of pay.

I. All hours worked on Saturdays shall be paid at one and one-half times the hourly rate of wage. In the event the job is down due to weather conditions during a five day work week (Monday through Friday,) or a four day-ten hour work week (Tuesday through Friday,) then Saturday may be worked as a voluntary make-up day at the straight time rate. However, Saturday shall not be utilized as a make-up day when a holiday falls on Friday. All hours worked Monday through Saturday over twelve (12) hours and all hours worked on Sundays and holidays shall be paid at double the hourly rate of wage.

4. ALL HOURS WORKED IN EXCESS OF EIGHT (8) HOURS PER DAY OR FORTY (40) HOURS PER WEEK SHALL BE PAID AT ONE AND ONE-HALF TIMES THE HOURLY RATE OF WAGE.

A. All hours worked in excess of eight (8) hours per day or forty (40) hours per week shall be paid at double the hourly rate of wage. All hours worked on Saturdays, Sundays and holidays shall be paid at double the hourly rate of wage.

B. All hours worked over twelve (12) hours per day and all hours worked on holidays shall be paid at double the hourly rate of wage.

Holiday Codes

5. A. Holidays: New Year's Day, Memorial Day, Independence Day, Labor Day, Thanksgiving Day, Friday after Thanksgiving Day, and Christmas Day (7).

B. Holidays: New Year's Day, Memorial Day, Independence Day, Labor Day, Thanksgiving Day, Friday after Thanksgiving Day, the day before Christmas, and Christmas Day (8).

C. Holidays: New Year's Day, Presidents' Day, Memorial Day, Independence Day, Labor Day, Thanksgiving Day, the Friday after Thanksgiving Day, And Christmas Day (8).

INFORMATIONAL COPY ONLY - NOT FOR BIDDING

5. D. Holidays: New Year's Day, Memorial Day, Independence Day, Labor Day, Thanksgiving Day, the Friday and Saturday after Thanksgiving Day, And Christmas Day (8).

H. Holidays: New Year's Day, Memorial Day, Independence Day, Thanksgiving Day, the Day after Thanksgiving Day, And Christmas (6).

I. Holidays: New Year's Day, Memorial Day, Independence Day, Labor Day, Thanksgiving Day, and Christmas Day (6).

J. Holidays: New Year's Day, Memorial Day, Independence Day, Thanksgiving Day, Friday after Thanksgiving Day, Christmas Eve Day, And Christmas Day (7).

K. Holidays: New Year's Day, Presidents' Day, Memorial Day, Independence Day, Labor Day, Thanksgiving Day, Friday After Thanksgiving Day, The Day Before Christmas, And Christmas Day (9).

L. Holidays: New Year's Day, Martin Luther King Jr. Day, Memorial Day, Independence Day, Labor Day, Thanksgiving Day, Friday After Thanksgiving Day, And Christmas Day (8).

N. Holidays: New Year's Day, Presidents' Day, Memorial Day, Independence Day, Labor Day, Veterans' Day, Thanksgiving Day, The Friday After Thanksgiving Day, And Christmas Day (9).

P. Holidays: New Year's Day, Memorial Day, Independence Day, Labor Day, Thanksgiving Day, Friday And Saturday After Thanksgiving Day, The Day Before Christmas, And Christmas Day (9). If A Holiday Falls On Sunday, The Following Monday Shall Be Considered As A Holiday.

Q. Paid Holidays: New Year's Day, Memorial Day, Independence Day, Labor Day, Thanksgiving Day, and Christmas Day (6).

R. Paid Holidays: New Year's Day, Memorial Day, Independence Day, Labor Day, Thanksgiving Day, Day After Thanksgiving Day, One-Half Day Before Christmas Day, And Christmas Day. (7 1/2).

S. Paid Holidays: New Year's Day, Presidents' Day, Memorial Day, Independence Day, Labor Day, Thanksgiving Day, And Christmas Day (7).

T. Paid Holidays: New Year's Day, Washington's Birthday, Memorial Day, Independence Day, Labor Day, Thanksgiving Day, The Friday After Thanksgiving Day, Christmas Day, And The Day Before Or After Christmas (9).

Z. Holidays: New Year's Day, Memorial Day, Independence Day, Labor Day, Veterans Day, Thanksgiving Day, the Friday after Thanksgiving Day, And Christmas Day (8).

Holiday Codes Continued

6. A. Paid Holidays: New Year's Day, Presidents' Day, Memorial Day, Independence Day, Labor Day, Thanksgiving Day, The Friday After Thanksgiving Day, And Christmas Day (8).

E. Paid Holidays: New Year's Day, Day Before Or After New Year's Day, Presidents Day, Memorial Day, Independence Day, Labor Day, Thanksgiving Day, Day After Thanksgiving Day, Christmas Day, And A Half-Day On Christmas Eve Day. (9 1/2).

G. Paid Holidays: New Year's Day, Martin Luther King Jr. Day, Presidents' Day, Memorial Day, Independence Day, Labor Day, Veterans' Day, Thanksgiving Day, The Friday After Thanksgiving Day, Christmas Day, And Christmas Eve Day (11).

INFORMATIONAL COPY ONLY - NOT FOR BIDDING

6. H. Paid Holidays: New Year's Day, New Year's Eve Day, Memorial Day, Independence Day, Labor Day, Thanksgiving Day, Friday After Thanksgiving Day, Christmas Day, The Day After Christmas, And A Floating Holiday (10).

I. Paid Holidays: New Year's Day, Memorial Day, Independence Day, Labor Day, Thanksgiving Day, Friday After Thanksgiving Day, And Christmas Day (7).

T. Paid Holidays: New Year's Day, Presidents' Day, Memorial Day, Independence Day, Labor Day, Thanksgiving Day, The Friday After Thanksgiving Day, The Last Working Day Before Christmas Day, And Christmas Day (9).

Z. Holidays: New Year's Day, Memorial Day, Independence Day, Labor Day, Thanksgiving Day, Friday after Thanksgiving Day, And Christmas Day (7). If a holiday falls on Saturday, the preceding Friday shall be considered as the holiday. If a holiday falls on Sunday, the following Monday shall be considered as the holiday.

Holiday Codes Continued

7. A. Holidays: New Year's Day, Memorial Day, Independence Day, Labor Day, Thanksgiving Day, The Friday And Saturday After Thanksgiving Day, And Christmas Day (8). Any Holiday Which Falls On A Sunday Shall Be Observed As A Holiday On The Following Monday. If any of the listed holidays falls on a Saturday, the preceding Friday shall be a regular work day.

B. Holidays: New Year's Day, Memorial Day, Independence Day, Labor Day, Thanksgiving Day, the Friday and Saturday after Thanksgiving Day, And Christmas Day (8). Any holiday which falls on a Sunday shall be observed as a holiday on the following Monday. Any holiday which falls on a Saturday shall be observed as a holiday on the preceding Friday.

C. Holidays: New Year's Day, Martin Luther King Jr. Day, Memorial Day, Independence Day, Labor Day, Thanksgiving Day, The Friday After Thanksgiving Day, And Christmas Day (8). Any holiday which falls on a Sunday shall be observed as a holiday on the following Monday. Any holiday which falls on a Saturday shall be observed as a holiday on the preceding Friday.

D. Paid Holidays: New Year's Day, Memorial Day, Independence Day, Labor Day, Veteran's Day, Thanksgiving Day, the Friday after Thanksgiving Day, And Christmas Day (8). Unpaid Holidays: President's Day. Any paid holiday which falls on a Sunday shall be observed as a holiday on the following Monday. Any paid holiday which falls on a Saturday shall be observed as a holiday on the preceding Friday.

E. Holidays: New Year's Day, Memorial Day, Independence Day, Labor Day, Thanksgiving Day, the Friday after Thanksgiving Day, And Christmas Day (7). Any holiday which falls on a Sunday shall be observed as a holiday on the following Monday. Any holiday which falls on a Saturday shall be observed as a holiday on the preceding Friday.

F. Holidays: New Year's Day, Memorial Day, Independence Day, Labor Day, Thanksgiving Day, the Friday after Thanksgiving Day, the last working day before Christmas day and Christmas day (8). Any holiday which falls on a Sunday shall be observed as a holiday on the following Monday. Any holiday which falls on a Saturday shall be observed as a holiday on the preceding Friday.

G. Holidays: New Year's Day, Memorial Day, Independence Day, Labor Day, Thanksgiving Day, and Christmas Day (6). Any holiday which falls on a Sunday shall be observed as a holiday on the following Monday.

H. Holidays: New Year's Day, Martin Luther King Jr. Day, Independence Day, Memorial Day, Labor Day, Thanksgiving Day, the Friday after Thanksgiving Day, the Last Working Day before Christmas Day and Christmas Day (9). Any holiday which falls on a Sunday shall be observed as a holiday on the following Monday. Any holiday which falls on a Saturday shall be observed as a holiday on the preceding Friday.

INFORMATIONAL COPY ONLY - NOT FOR BIDDING

7. I. Holidays: New Year's Day, President's Day, Independence Day, Memorial Day, Labor Day, Thanksgiving Day, The Friday After Thanksgiving Day, The Day Before Christmas Day And Christmas Day (9). Any holiday which falls on a Sunday shall be observed as a holiday on the following Monday. Any holiday which falls on a Saturday shall be observed as a holiday on the preceding Friday.

J. Holidays: New Year's Day, Independence Day, Memorial Day, Labor Day, Thanksgiving Day and Christmas Day (6). Any holiday which falls on a Sunday shall be observed as a holiday on the following Monday. Any holiday which falls on a Saturday shall be observed as a holiday on the preceding Friday.

K. Holidays: New Year's Day, Memorial Day, Independence Day, Thanksgiving Day, the Friday and Saturday after Thanksgiving Day, And Christmas Day (8). Any holiday which falls on a Sunday shall be observed as a holiday on the following Monday. Any holiday which falls on a Saturday shall be observed as a holiday on the preceding Friday.

L. Holidays: New Year's Day, Memorial Day, Labor Day, Independence Day, Thanksgiving Day, the Last Work Day before Christmas Day, And Christmas Day (7). Any holiday which falls on a Sunday shall be observed as a holiday on the following Monday. Any holiday which falls on a Saturday shall be observed as a holiday on the preceding Friday.

M. Paid Holidays: New Year's Day, The Day after or before New Year's Day, President's Day, Memorial Day, Independence Day, Labor Day, Thanksgiving Day, the Friday after Thanksgiving Day, Christmas Day, And the Day after or before Christmas Day 10). Any holiday which falls on a Sunday shall be observed as a holiday on the following Monday. Any holiday which falls on a Saturday shall be observed as a holiday on the preceding Friday.

N. Holidays: New Year's Day, Memorial Day, Independence Day, Labor Day, Thanksgiving Day, the Friday after Thanksgiving Day, And Christmas Day (7). Any holiday which falls on a Sunday shall be observed as a holiday on the following Monday. When Christmas falls on a Saturday, the preceding Friday shall be observed as a holiday.

P. Holidays: New Year's Day, Memorial Day, Independence Day, Labor Day, Thanksgiving Day, Friday after Thanksgiving Day, And Christmas Day (7). Any holiday which falls on a Sunday shall be observed as a holiday on the following Monday.

Q. Holidays: New Year's Day, Memorial Day, Independence Day, Labor Day, Thanksgiving Day, the Friday after Thanksgiving Day, the Last Working Day before Christmas Day and Christmas Day (8). Any holiday which falls on a Sunday shall be observed as a holiday on the following Monday. If any of the listed holidays falls on a Saturday, the preceding Friday shall be a regular work day.

R. Paid Holidays: New Year's Day, the day after or before New Year's Day, President's Day, Memorial Day, Independence Day, Labor Day, Thanksgiving Day, the Friday after Thanksgiving Day, Christmas Day, and the day after or before Christmas Day (10). If any of the listed holidays fall on Saturday, the preceding Friday shall be observed as the holiday. If any of the listed holidays falls on a Sunday, the day observed by the Nation shall be considered a holiday and compensated accordingly.

S. Paid Holidays: New Year's Day, Memorial Day, Independence Day, Labor Day, Thanksgiving Day, Friday After Thanksgiving Day, Christmas Day, The Day After Christmas, And A Floating Holiday (9). If any of the listed holidays falls on a Sunday, the day observed by the Nation shall be considered a holiday and compensated accordingly.

T. Paid Holidays: New Year's Day, The Day After Or Before New Year's Day, President's Day, Memorial Day, Independence Day, Labor Day, Thanksgiving Day, The Friday After Thanksgiving Day, Christmas Day, and The Day After Or Before Christmas Day. (10). If any of the listed holidays falls on a Sunday, the day observed by the Nation shall be considered a holiday and compensated accordingly. Any holiday which falls on a Saturday shall be observed as a holiday on the preceding Friday.

INFORMATIONAL COPY ONLY - NOT FOR BIDDING

Note Codes

8. A. In addition to the hourly wage and fringe benefits, the following depth premiums apply to depths of fifty feet or more:
Over 50' To 100' -$2.00 per Foot for Each Foot Over 50 Feet
Over 100' To 150' -$3.00 per Foot for Each Foot Over 100 Feet
Over 150' To 220' -$4.00 per Foot for Each Foot Over 150 Feet
Over 220' -$5.00 per Foot for Each Foot Over 220 Feet

C. In addition to the hourly wage and fringe benefits, the following depth premiums apply to depths of fifty feet or more:
Over 50' To 100' -$1.00 per Foot for Each Foot Over 50 Feet
Over 100' To 150' -$1.50 per Foot for Each Foot Over 100 Feet
Over 150' To 200' -$2.00 per Foot for Each Foot Over 150 Feet
Over 200' -Divers May Name Their Own Price

D. Workers working with supplied air on hazmat projects receive an additional $1.00 per hour.

L. Workers on hazmat projects receive additional hourly premiums as follows -Level A: $0.75, Level B: $0.50, And Level C: $0.25.

M. Workers on hazmat projects receive additional hourly premiums as follows: Levels A & B: $1.00, Levels C & D: $0.50.

N. Workers on hazmat projects receive additional hourly premiums as follows -Level A: $1.00, Level B: $0.75, Level C: $0.50, And Level D: $0.25.

P. Workers on hazmat projects receive additional hourly premiums as follows -Class A Suit: $2.00, Class B Suit: $1.50, Class C Suit: $1.00, And Class D Suit $0.50.

Q. The highest pressure registered on the gauge for an accumulated time of more than fifteen (15) minutes during the shift shall be used in determining the scale paid.

R. Effective August 31, 2012 – A Traffic Control Supervisor shall be present on the project whenever flagging or spotting or other traffic control labor is being utilized. A Traffic Control Laborer performs the setup, maintenance and removal of all temporary traffic control devices and construction signs necessary to control vehicular, bicycle, and pedestrian traffic during construction operations. Flaggers and Spotters shall be posted where shown on approved Traffic Control Plans or where directed by the Engineer. All flaggers and spotters shall possess a current flagging card issued by the State of Washington, Oregon, Montana, or Idaho. These classifications are only effective on or after August 31, 2012.

S. Effective August 31, 2012 – A Traffic Control Supervisor shall be present on the project whenever flagging or spotting or other traffic control labor is being utilized. Flaggers and Spotters shall be posted where shown on approved Traffic Control Plans or where directed by the Engineer. All flaggers and spotters shall possess a current flagging card issued by the State of Washington, Oregon, Montana, or Idaho. This classification is only effective on or after August 31, 2012.

T. Effective August 31, 2012 – A Traffic Control Laborer performs the setup, maintenance and removal of all temporary traffic control devices and construction signs necessary to control vehicular, bicycle, and pedestrian traffic during construction operations. Flaggers and Spotters shall be posted where shown on approved Traffic Control Plans or where directed by the Engineer. All flaggers and spotters shall possess a current flagging card issued by the State of Washington, Oregon, Montana, or Idaho. This classification is only effective on or after August 31, 2012.

INFORMATIONAL COPY ONLY - NOT FOR BIDDING

CONSTRUCTION SIGN PLAN

DATE: 8/7/2014

PROJ. NAME: STRATFORD GRIND INLAY **CRP #** 14-02

ITEM #	MUTCD #	QTY	SIGN STATUS	# CHK OUT	# CHK IN	DESCRIPTION	SIZE	COLOR
1	W20-1	13				ROAD WORK AHEAD	36X36	HITP B/O
2	G20-1	7				ROAD RESURFACING	60X36	HITP B/O
						NEXT 3 MI. EXPECT DELAYS		HITP B/O
3	W21-801/W13-1	8				ABRUPT LANE EDGE	36X36	HITP B/O
						35 MPH	18X18	HITP B/O
4		8				GROOVED PAVEMENT	36X36	HITP B/O
5	W21-1701	6				MC USE EXTREME CAUTION	24X30	HITP B/O
6	W21-1701	2				MC USE EXTREME CAUTION	36x36	HITP B/O

*NOTE: 1

CLASS "B" WORK ZONE FLAGGER SIGNS TO BE PROVIDED BY CONTRACTOR ON TEMPORARY STANDS. IF NECESSARY SIGNS LEFT OVERNIGHT WILL HAVE FLASHERS ATTACHED.

*NOTE: 2

SIGN TO BE MOUNTED ON ONE (1) EACH TYPE III BARRICADE WITH FLASHERS. MIN EIGNT (8) FT WIDE

--|-|---|-|-- IS THE SYMBOL FOR TWO (2) EACH TYPE III BARRICADES WITH FLASHERS ON THE SIGN PLAN MAP

THERE ARE A TOTAL OF ____0____ TYPE III BARRICADES ON THIS PROJECT.

*NOTE: 3

CONTRACTOR IS RESPONSIBLE FOR BARRICADES AND THE MAINTENANCE OF ALL CONSTRUCTION SIGNS AND THE REPLACEMENT OF ALL REMOVED STOP SIGNS. OTHER TRAFFIC SIGNS THAT ARE REMOVED ARE TO BE STORED AT A SITE DETERMINED BY THE PROJECT INSPECTOR. PORTABLE SIGNS AND TRAFFIC CONTROL DEVICES LISTED ARE NOT INTENDED TO BE COMPLETE. OTHER SIGNS MAY BE REQUIRED WITHIN THE PROJECT LIMITS TO ACCOMMODATE CONTRACTORS WORK METHODS.

CHECK OUT--CONTRACTORS REP: _____ DATE _____

CHECK IN---ALL SIGNS IN GOOD ORDER OR AS OTHERWISE NOTED: _____

CHECK IN--COUNTY REP: _____ DATE _____

INFORMATIONAL COPY ONLY - NOT FOR BIDDING

STRATFORD ROAD GRIND/INLAY

Moses Lake City Limits to Tyndall Vicinity

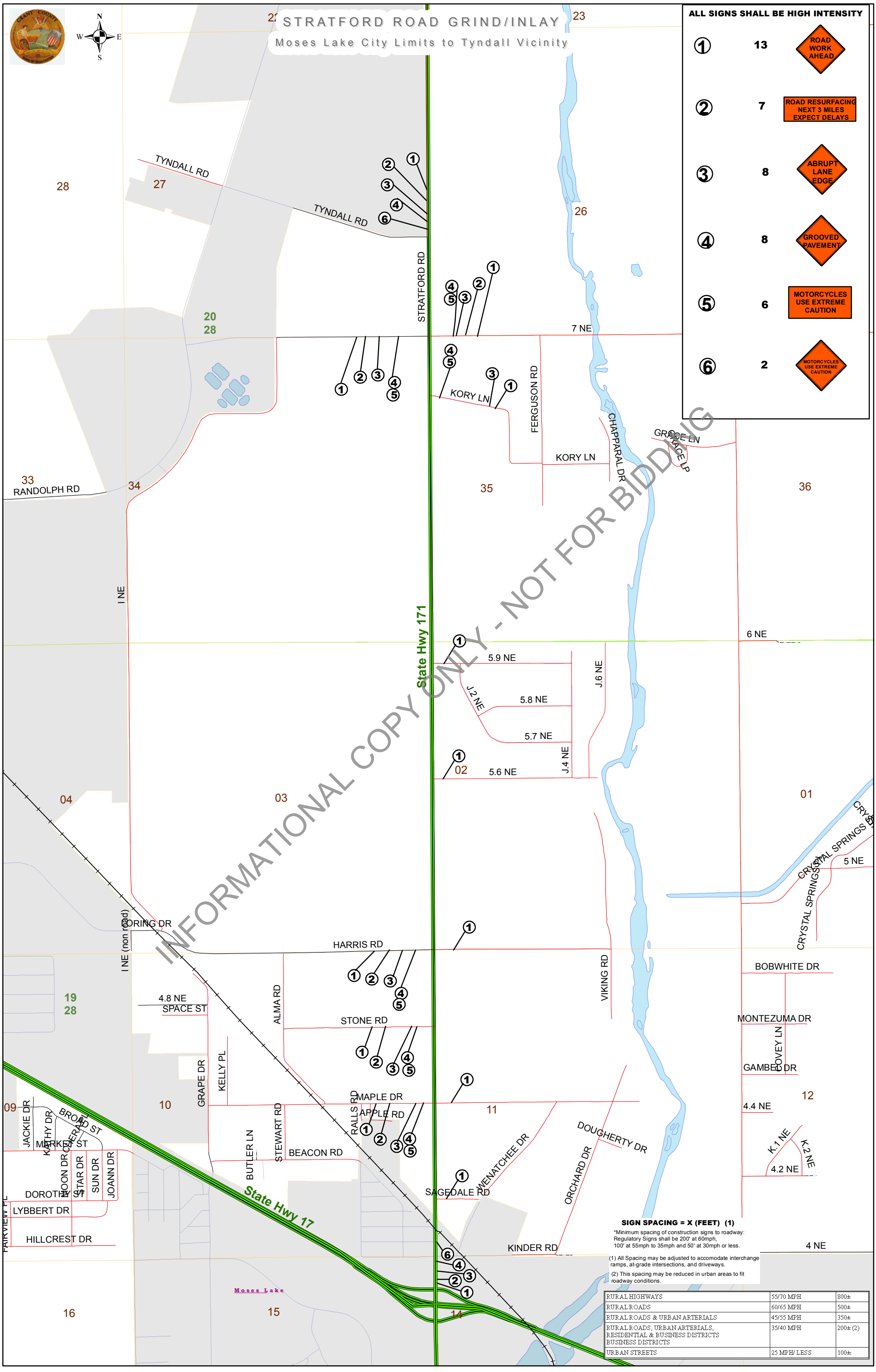

ALL SIGNS SHALL BE HIGH INTENSITY

1	13	ROAD WORK AHEAD
2	7	ROAD RESURFACING NEXT 3 MILES EXPECT DELAYS
3	8	ABRUPT LANE EDGE
4	8	GROOVED PAVEMENT
5	6	MOTORCYCLES USE EXTREME CAUTION
6	2	MOTORCYCLES USE EXTREME CAUTION

INFORMATIONAL COPY ONLY - NOT FOR BIDDING

SIGN SPACING = X (FEET) (1)

*Minimum spacing of construction signs to roadway: Regulatory Signs shall be 200' at 60mph, 100' at 55mph to 35mph and 50' at 30mph or less.

(1) All Spacing may be adjusted to accomodate interchange ramps, at-grade intersections, and driveways.

(2) This spacing may be reduced in urban areas to fit roadway conditions.

RURAL HIGHWAYS	55/70 MPH	800±
RURAL ROADS	60/65 MPH	500±
RURAL ROADS & URBAN ARTERIALS	45/55 MPH	350±
RURAL ROADS, URBAN ARTERIALS, RESIDENTIAL & BUSINESS DISTRICTS BUSINESS DISTRICTS	35/40 MPH	200± (2)
URBAN STREETS	25 MPH/ LESS	100±

CONSTRUCTION SIGN PLAN

DATE: 8/7/14

PROJ. NAME: PATTON BLVD GRIND INLAY **CRP #** 14-03

ITEM #	MUTCD #	QTY	SIGN STATUS	# CHK OUT	# CHK IN	DESCRIPTION	SIZE	COLOR
1	W20-1	13				ROAD WORK AHEAD	36X36	B/O-HIP
2	G20-2	5				*2 ROAD RESURFACING	60X30	B/O-HIP
						NEXT 1.5 MILES		B/O-HIP
						EXPECT DELAYS		B/O-HIP
3	W21-081	13				ABRUPT LANE EDGE	36X36	B/O-HIP
4	W8-1	13				GROOVED PAVEMENT	36X36	B/O-HIP
5	W21-1701	10				MC USE EXTREME	30X24	B/O-HIP
						CAUTION		B/O-HIP
6	W21-1701	3				MC USE EXTREME	36X36	B/O-HIP
						CAUTION		

*NOTE: 1

CLASS "B" WORK ZONE FLAGGER SIGNS TO BE PROVIDED BY CONTRACTOR ON TEMPORARY STANDS. IF NECESSARY SIGNS LEFT OVERNIGHT WILL HAVE FLASHERS ATTACHED.

*NOTE: 2

SIGNS OF OVER 10 SQ FT AREA WILL NEED TO BE MOUNTED ON TWO (2) POSTS

*NOTE: 3

THERE WILL BE APROXIMATELY 26 AREAS TO BE GROUND. A BUMP SIGN TO BE USED IN LANE AHEAD OF GRINDOUT. BUMP SIGNS ARE PROVIDED, CONTRACTOR RESPONSIBLE FOR TEMPORARY STANDS AND FLASHERS IF LEFT OVERNIGHT---SIGNS OVER 10 SQ FT TO BE MOUNTED ON TWO (2) POSTS.

*NOTE: 4

CONTRACTOR IS RESPONSIBLE FOR THE MAINTENANCE OF ALL CONSTRUCTION SIGNS AND THE REPLACEMENT OF ALL REMOVED STOP SIGNS. OTHER TRAFFIC SIGNS THAT ARE REMOVED ARE TO BE STORED AT A SITE DETERMINED BY THE PROJECT INSPECTOR. PORTABLE SIGNS AND TRAFFIC CONTROL DEVICES LISTED ARE NOT INTENDED TO BE COMPLETE. OTHER SIGNS MAY BE REQUIRED WITHIN THE PROJECT LIMITS TO ACCOMMODATE CONTRACTORS WORK METHODS.

CHECK OUT--CONTRACTORS REP: DATE

CHECK IN---ALL SIGNS IN GOOD ORDER OR AS OTHERWISE NOTED:

CHECK IN--COUNTY REP: DATE

INFORMATIONAL COPY ONLY - NOT FOR BIDDING

PATTON BLVD. GRIND/ INLAY

SR 17 to Craig Blvd.

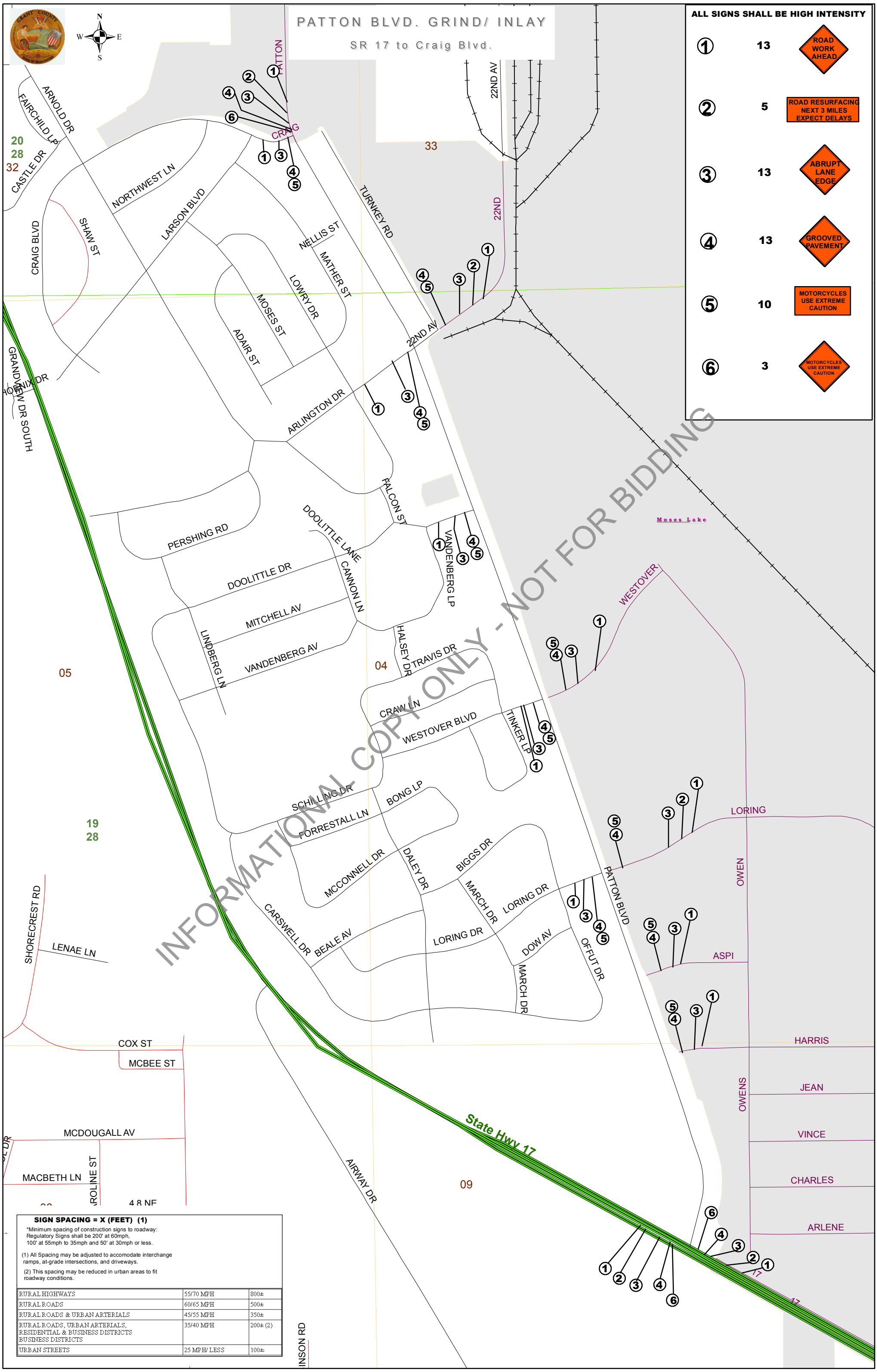

INFORMATIONAL COPY ONLY - NOT FOR BIDDING

ALL SIGNS SHALL BE HIGH INTENSITY

1	13	ROAD WORK AHEAD
2	5	ROAD RESURFACING NEXT 3 MILES EXPECT DELAYS
3	13	ABRUPT LANE EDGE
4	13	GROOVED PAVEMENT
5	10	MOTORCYCLES USE EXTREME CAUTION
6	3	MOTORCYCLES USE EXTREME CAUTION

SIGN SPACING = X (FEET) (1)

*Minimum spacing of construction signs to roadway: Regulatory Signs shall be 200' at 60mph, 100' at 55mph to 35mph and 50' at 30mph or less.

(1) All Spacing may be adjusted to accomodate interchange ramps, at-grade intersections, and driveways.

(2) This spacing may be reduced in urban areas to fit roadway conditions.

RURAL HIGHWAYS	55/70 MPH	800±
RURAL ROADS	60/65 MPH	500±
RURAL ROADS & URBAN ARTERIALS	45/55 MPH	350±
RURAL ROADS, URBAN ARTERIALS, RESIDENTIAL & BUSINESS DISTRICTS BUSINESS DISTRICTS	35/40 MPH	200± (2)
URBAN STREETS	25 MPH/ LESS	100±

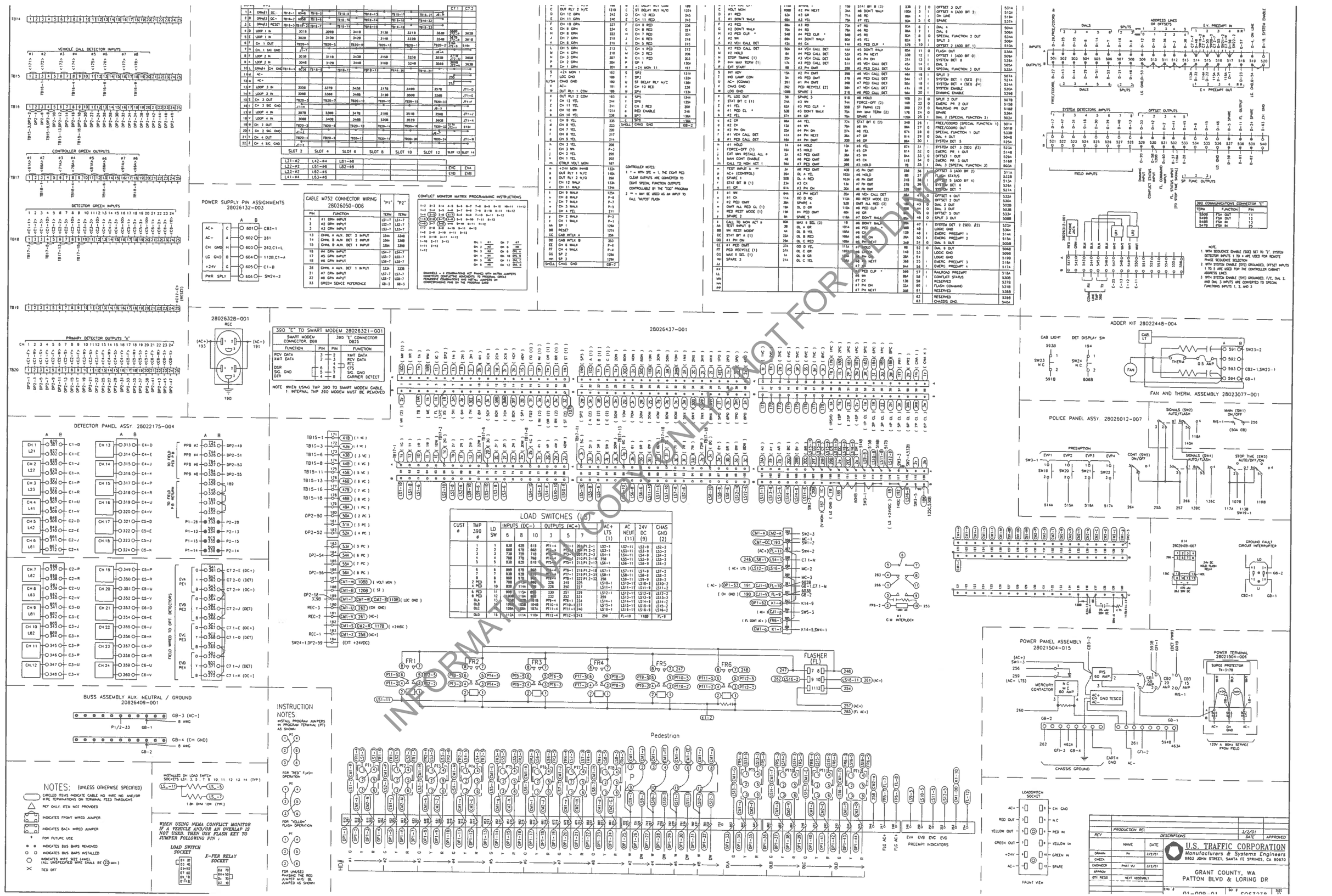

INFORMATIONAL COPY ONLY
NOT FOR ADDING

28026102-015
INTERSECTION DISPLAY PANEL ASSY.

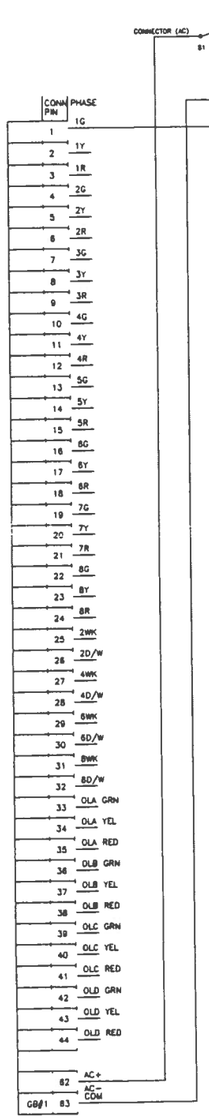

DP1
28026102-017
DISPLAY CBL 63 PINS

PIN	FUNCTION	TO
1	Ø1 GRN	201
2	Ø1 YEL	202
3	Ø1 RED	203
4	Ø2 GRN	204
5	Ø2 YEL	205
6	Ø2 RED	206
7	Ø3 GRN	207
8	Ø3 YEL	208
9	Ø3 RED	209
10	Ø4 GRN	210
11	Ø4 YEL	211
12	Ø4 RED	212
13	Ø5 GRN	213
14	Ø5 YEL	214
15	Ø5 RED	215
16	Ø6 GRN	216
17	Ø6 YEL	217
18	Ø6 RED	218
19	Ø7 GRN	219
20	Ø7 YEL	220
21	Ø7 RED	221
22	Ø8 GRN	222
23	Ø8 YEL	223
24	Ø8 RED	224
25	Ø2 WK	225
26	Ø2 D/W	226
27	Ø4 WK	227
28	Ø4 D/W	228
29	Ø6 WK	229
30	Ø6 D/W	230
31	Ø8 WK	231
32	Ø8 D/W	232
33	OVLA GRN	234
34	OLVA YEL	235
35	OLVA RED	236
36	OLVB GRN	237
37	OLVB YEL	238
38	OLVB RED	239
39	OLVC GRN	240
40	OLVC YEL	241
41	OLVC RED	242
42	OLVD GRN	243
43	OLVD YEL	244
44	OLVD RED	245
45		T
46		T
47		T
48		T
49		T
50		T
51		T
52		T
53		T
54		T
55		T
56		T
57		T
58	GUIDE PIN	*
59	GUIDE PIN	*
60		T
61		T
62	AC+	263
63	AC-	261

28026102-047
DETECTION PANEL ASSY.

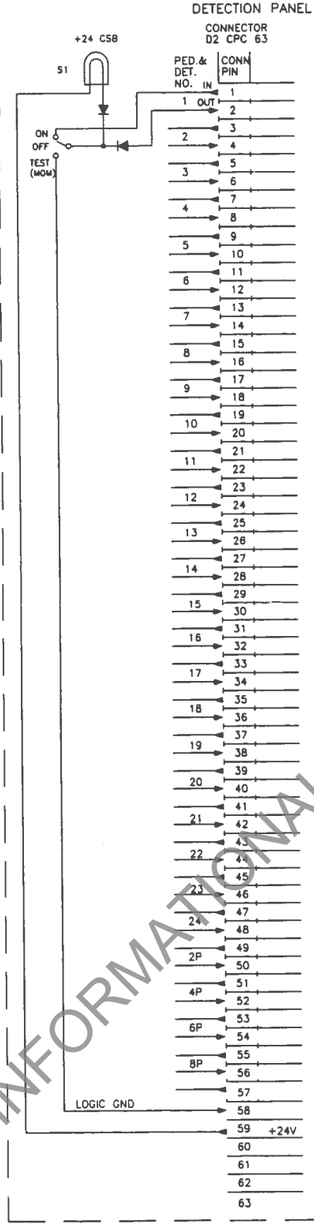

DP2
28026102-017A
DISPLAY CBL 63 PINS

PIN	FUNCTION	TO
1	CH. 1 IN	TB20-1
2	CH. 1 OUT	TB16-1
3	CH. 2 IN	TB20-2
4	CH. 2 OUT	TB16-2
5	CH. 3 IN	TB20-3
6	CH. 3 OUT	TB16-3
7	CH. 4 IN	TB20-4
8	CH. 4 OUT	TB16-4
9	CH. 5 IN	TB20-5
10	CH. 5 OUT	TB16-5
11	CH. 6 IN	TB20-6
12	CH. 6 OUT	TB16-6
13	CH. 7 IN	TB20-7
14	CH. 7 OUT	TB16-7
15	CH. 8 IN	TB20-8
16	CH. 8 OUT	TB16-8
17	CH. 9 IN	TB20-9
18	CH. 9 OUT	TB16-9
19	CH. 10 IN	TB20-10
20	CH. 10 OUT	TB16-10
21	CH. 11 IN	TB20-11
22	CH. 11 OUT	TB16-11
23	CH. 12 IN	TB20-12
24	CH. 12 OUT	TB16-12
25	CH. 13 IN	TB20-13
26	CH. 13 OUT	TB16-13
27	CH. 14 IN	TB20-14
28	CH. 14 OUT	TB16-14
29	CH. 15 IN	TB20-15
30	CH. 15 OUT	TB16-15
31	CH. 16 IN	TB20-16
32	CH. 16 OUT	TB16-16
33	CH. 17 IN	TB20-17
34	CH. 17 OUT	TB16-17
35	CH. 18 IN	TB20-18
36	CH. 18 OUT	TB16-18
37	CH. 19 IN	TB20-19
38	CH. 19 OUT	TB16-19
39	CH. 20 IN	TB20-20
40	CH. 20 OUT	TB16-20
41	CH. 21 IN	TB20-21
42	CH. 21 OUT	TB16-21
43	CH. 22 IN	TB20-22
44	CH. 22 OUT	TB16-22
45	CH. 23 IN	TB20-23
46	CH. 23 OUT	TB16-23
47	CH. 24 IN	TB20-24
48	CH. 24 OUT	TB16-24
49	2 PED IN	325B
50	2 PED OUT	180
51	4 PED IN	326B
52	4 PED OUT	182
53	6 PED IN	327B
54	6 PED OUT	184
55	8 PED IN	328B
56	8 PED OUT	186
57		
58	LOGIC GND	189
59	+24 VDC	194
60		
61		
62	GUIDE PIN	*
63	GUIDE PIN	*

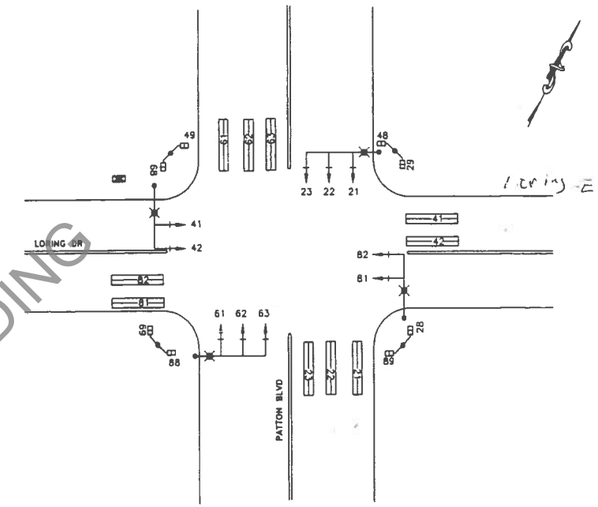

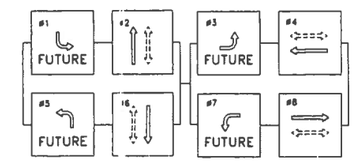

PHASE DIAGRAM

CONTROLLER CABINET LAYOUT

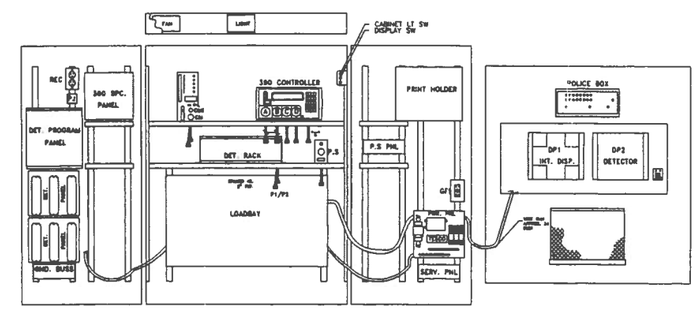

	NAME	DATE
DRAWN	PV	3/2/01
CHECK		
ENGINEER	PHAT VU	3/2/01
APPROV		
QTY REQD	NEXT ASSEMBLY	

U.S. TRAFFIC CORPORATION
Manufacturers & Systems Engineers
9603 JOHN STREET, SANTA FE SPRINGS, CA 90670

GRANT COUNTY, WA
PATTON BLVD & LORING DR

ENG. #: 01-009-01 | SO. #: S063238 | SIZE D

APPLICATION | REVISION: | SCALE = 1/1 | SHEET 2 OF 2

INFORMATIONAL COPY ONLY - NOT FOR BIDDING

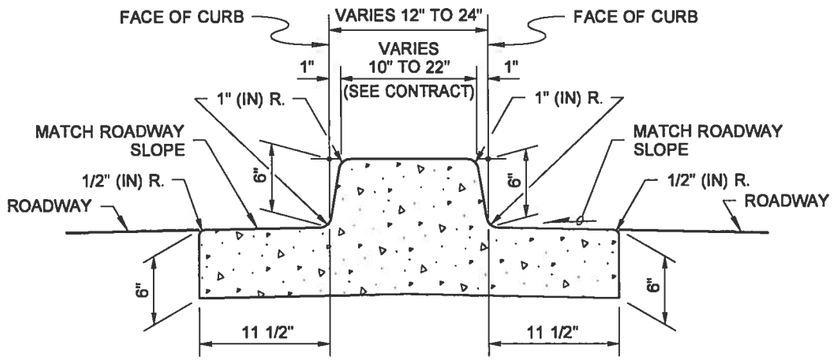

DUAL-FACED CEMENT CONCRETE TRAFFIC CURB AND GUTTER

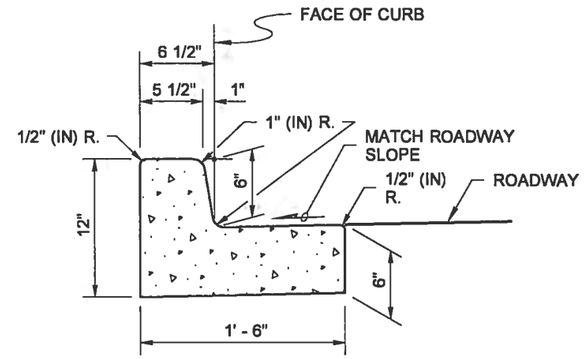

CEMENT CONCRETE TRAFFIC CURB AND GUTTER

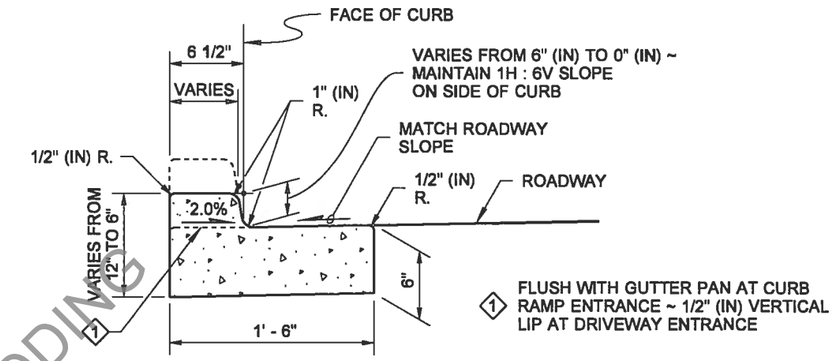

DEPRESSED CURB SECTION

AT CURB RAMPS AND DRIVEWAY ENTRANCES

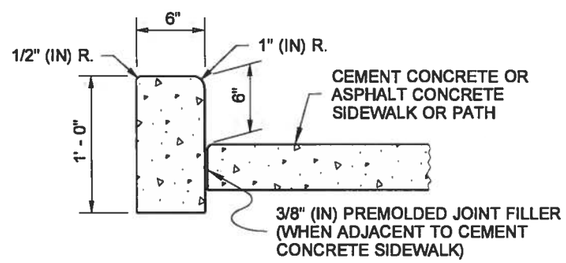

CEMENT CONCRETE PEDESTRIAN CURB

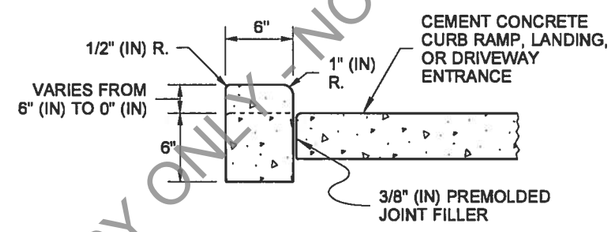

CEMENT CONCRETE PEDESTRIAN CURB

AT CURB RAMPS, LANDINGS, AND DRIVEWAY ENTRANCES

NOTE

1. See **Standard Plan F-30.10** for Curb Expansion and Contraction Joint spacing and see **Standard Specification Sections 8-04 and 9-04** for additional requirements.

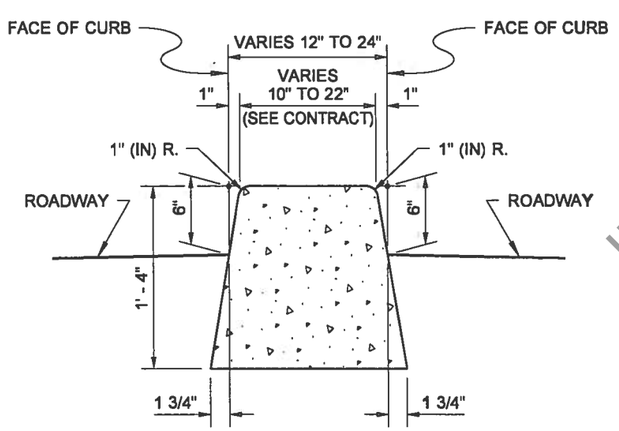

DUAL-FACED CEMENT CONCRETE TRAFFIC CURB

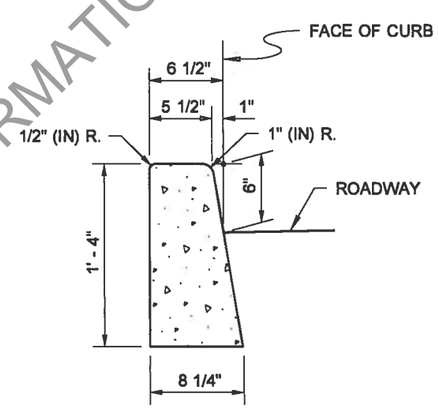

CEMENT CONCRETE TRAFFIC CURB

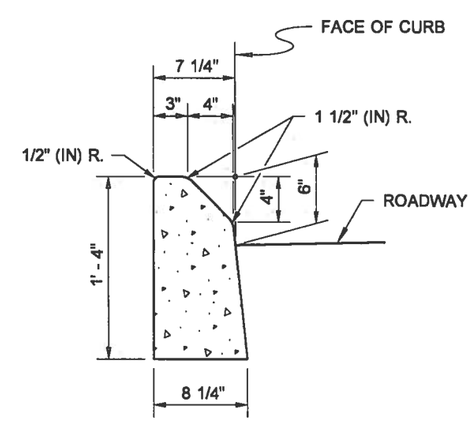

MOUNTABLE CEMENT CONCRETE TRAFFIC CURB

Barry, Ed
May 6 2014 3:31 PM

CEMENT CONCRETE CURBS

STANDARD PLAN F-10.12-03

SHEET 1 OF 1 SHEET

APPROVED FOR PUBLICATION
Bakotich, Pasco
Jun 11 2014 1:25 PM
STATE DESIGN ENGINEER
Washington State Department of Transportation

DRAWN BY: FERN LIDDELL

INFORMATIONAL COPY ONLY - NOT FOR BIDDING

DRAWN BY: MARK SUJKA

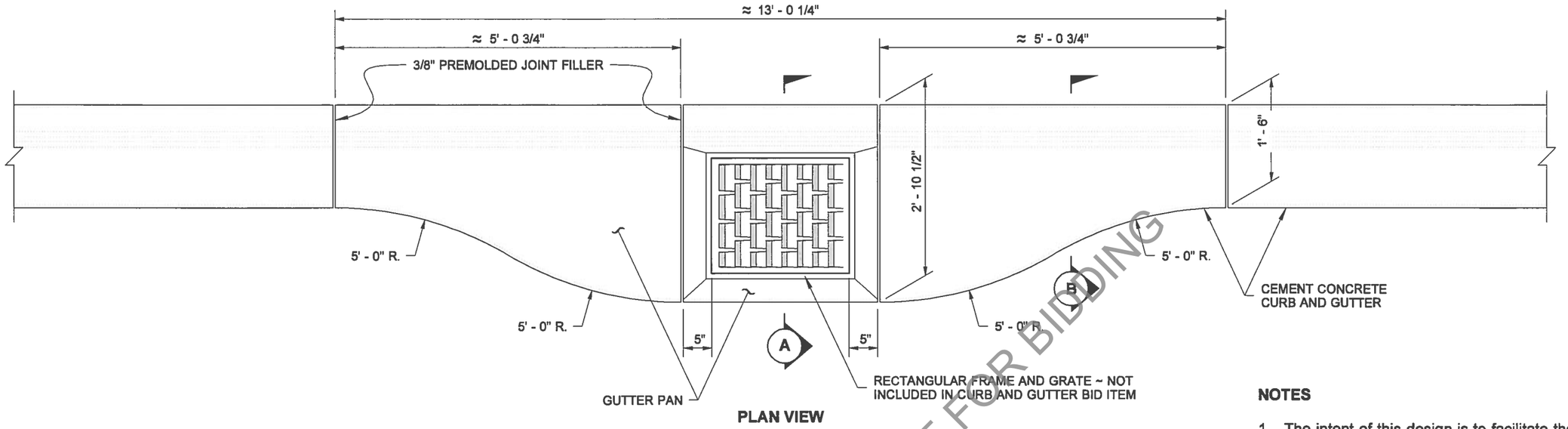

PLAN VIEW

CATCH BASIN GUTTER PAN

NOTES

1. The intent of this design is to facilitate the compaction of Hot Mix Asphalt pavement adjacent to a drainage structure.
2. The centerline of the drainage structure may differ from the centerline of the frame and grate.

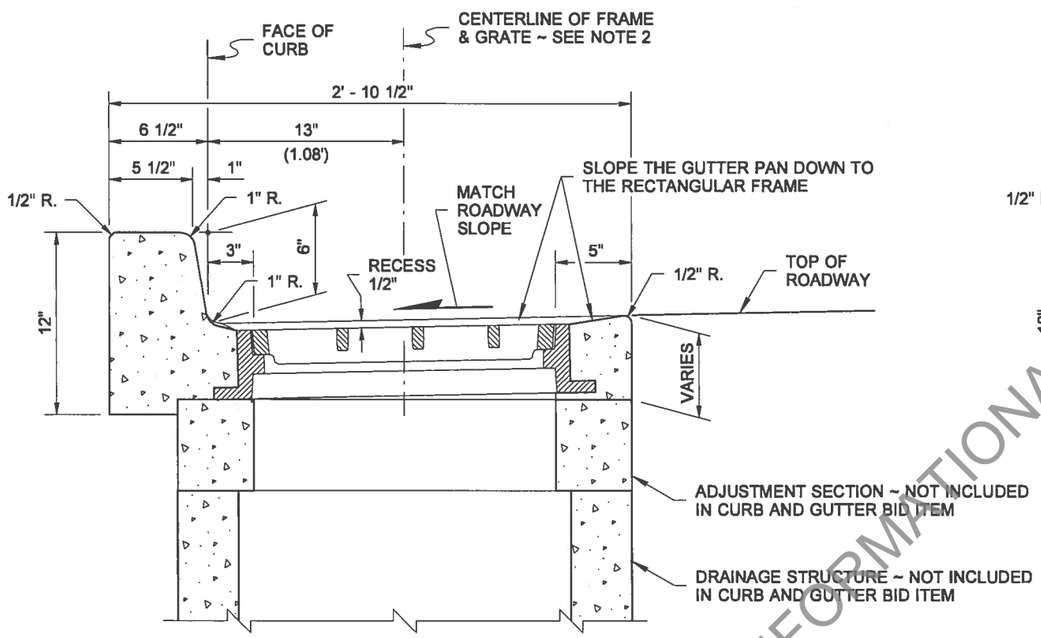

SECTION A

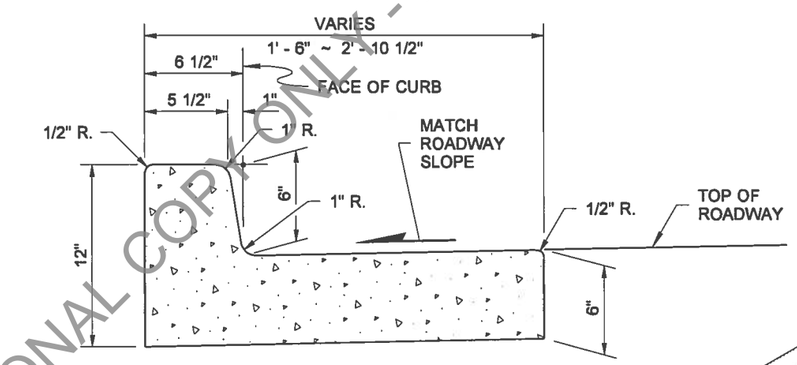

SECTION B

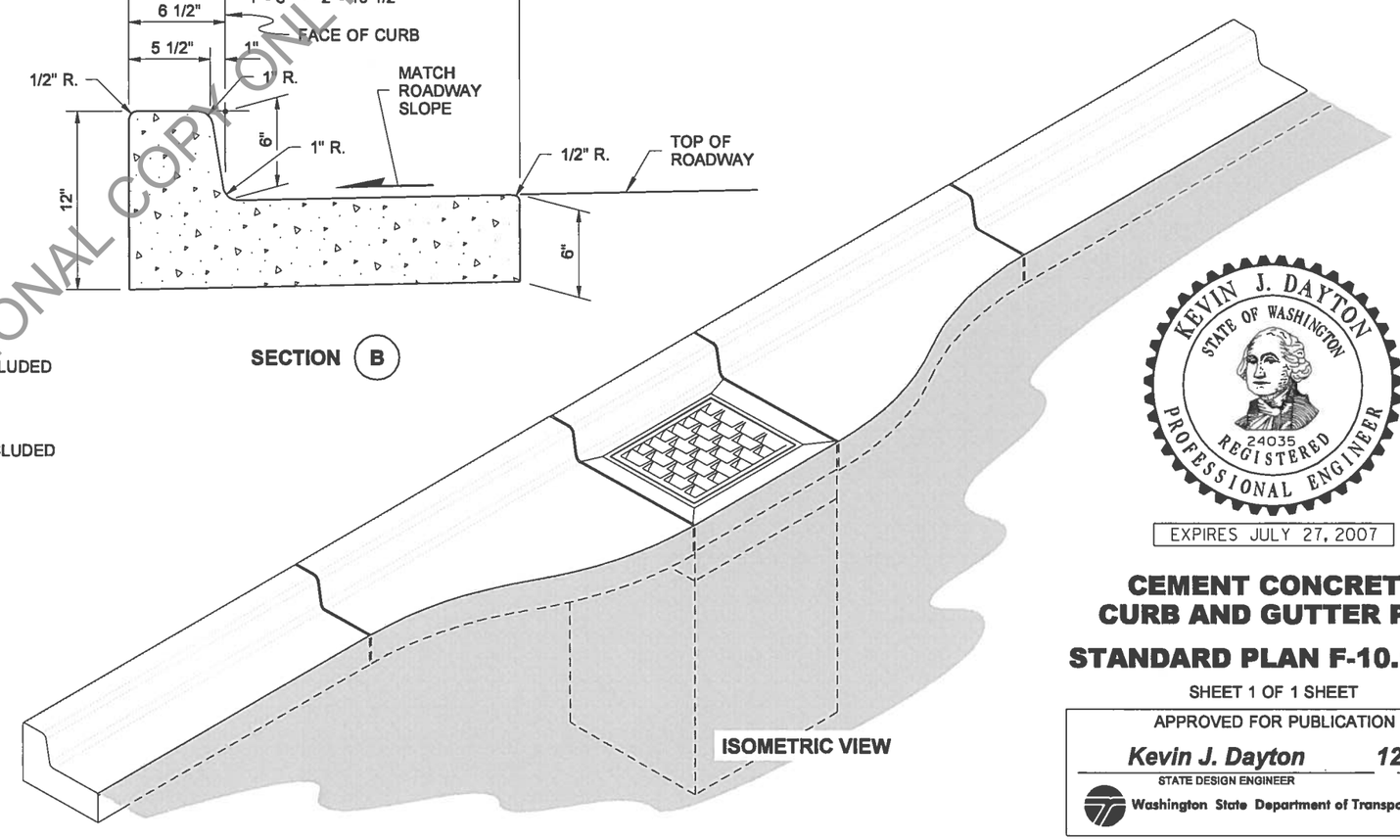

ISOMETRIC VIEW

INFORMATIONAL COPY ONLY - NOT FOR BIDDING

KEVIN J. DAYTON
STATE OF WASHINGTON
24035
REGISTERED
PROFESSIONAL ENGINEER

EXPIRES JULY 27, 2007

NOTE: THIS PLAN IS NOT A LEGAL ENGINEERING DOCUMENT BUT AN ELECTRONIC DUPLICATE. THE ORIGINAL, SIGNED BY THE ENGINEER AND APPROVED FOR PUBLICATION, IS KEPT ON FILE AT THE WASHINGTON STATE DEPARTMENT OF TRANSPORTATION. A COPY MAY BE OBTAINED UPON REQUEST.

CEMENT CONCRETE CURB AND GUTTER PAN

STANDARD PLAN F-10.16-00

SHEET 1 OF 1 SHEET

APPROVED FOR PUBLICATION

Kevin J. Dayton — STATE DESIGN ENGINEER
12-20-06 — DATE

Washington State Department of Transportation

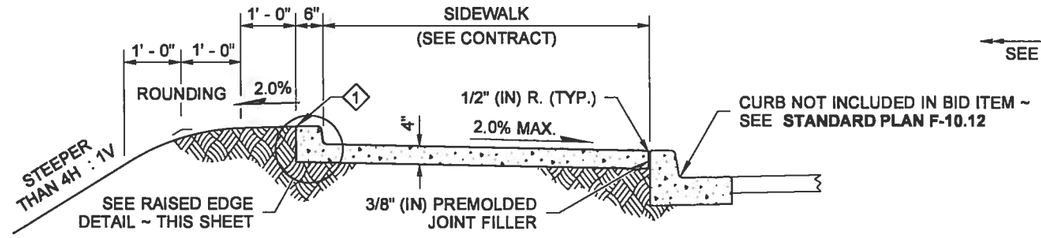

WITH RAISED EDGE

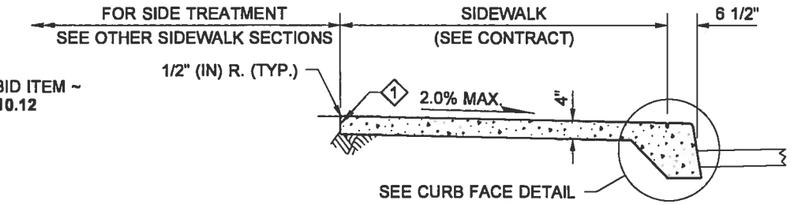

MONOLITHIC CEMENT CONCRETE CURB AND SIDEWALK

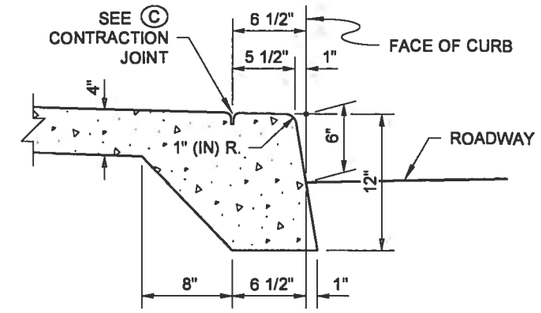

CURB FACE DETAIL

EXTEND SIDEWALK TRANSVERSE EXPANSION JOINTS TO INCLUDE CURB (FULL DEPTH)

1 FINISHED GRADE 1" (IN) BELOW TOP OF CONCRETE SURFACE

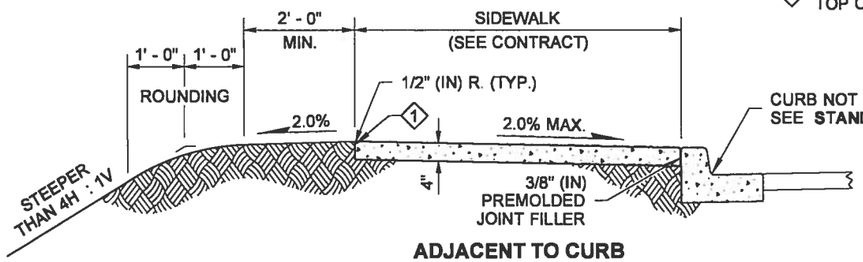

ADJACENT TO CURB
(STEEP FILL SLOPES)

NOTE

1. Four feet of the sidewalk width shall be the minimum pedestrian accessible route free of vertical and horizontal obstructions. Gratings, Access Covers, Junction Boxes, Cable Vaults, Pull Boxes and other appurtenances within the sidewalk must have slip resistant surfaces, be flush with surface, and match grade of the sidewalk.

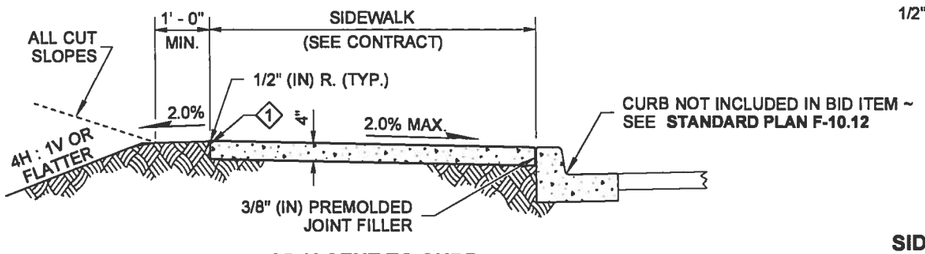

ADJACENT TO CURB

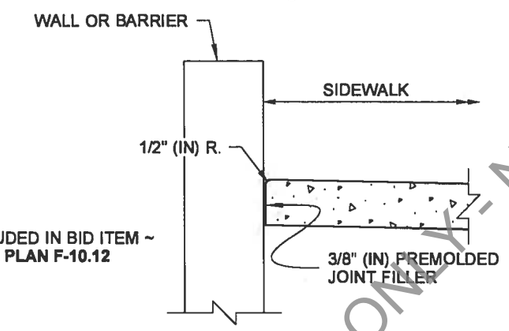

SIDEWALK ADJACENT TO WALL DETAIL

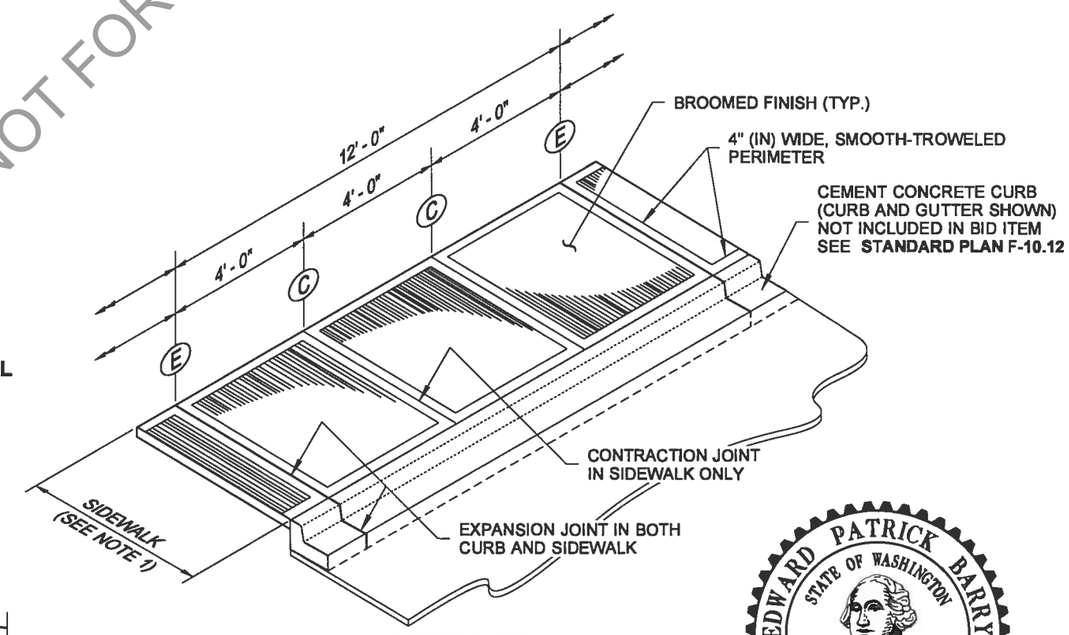

ISOMETRIC VIEW

JOINT AND FINISH DETAIL

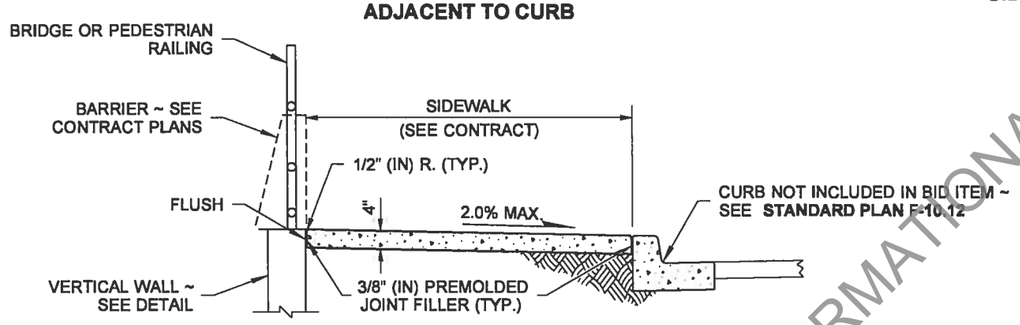

ADJACENT TO CURB AND RAILING OR WALL

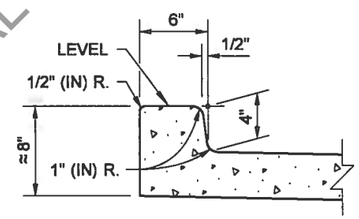

RAISED EDGE DETAIL

EXTEND SIDEWALK TRANSVERSE JOINTS TO INCLUDE RAISED EDGE

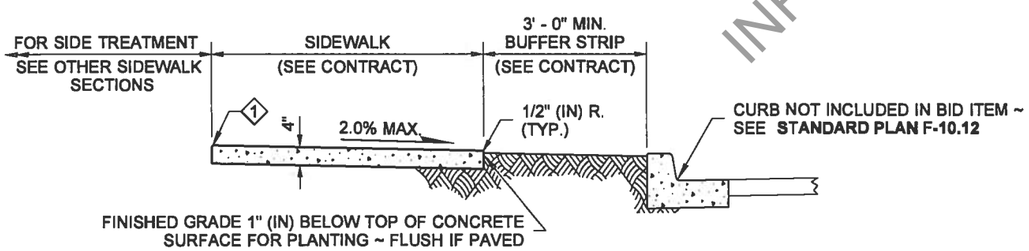

ADJACENT TO BUFFER STRIP

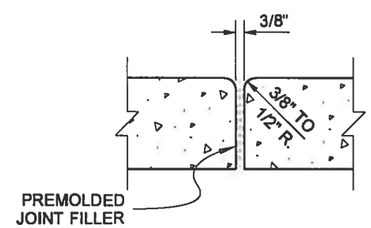

E EXPANSION JOINT

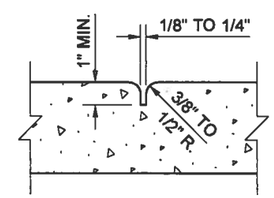

C CONTRACTION JOINT

Barry, Ed
May 6 2014 3:41 PM

CEMENT CONCRETE SIDEWALK

STANDARD PLAN F-30.10-03

SHEET 1 OF 1 SHEET

APPROVED FOR PUBLICATION
Bakotich, Pasco
Jun 11 2014 1:25 PM
STATE DESIGN ENGINEER
Washington State Department of Transportation

DRAWN BY: LISA CYFORD

INFORMATIONAL COPY ONLY - NOT FOR BIDDING

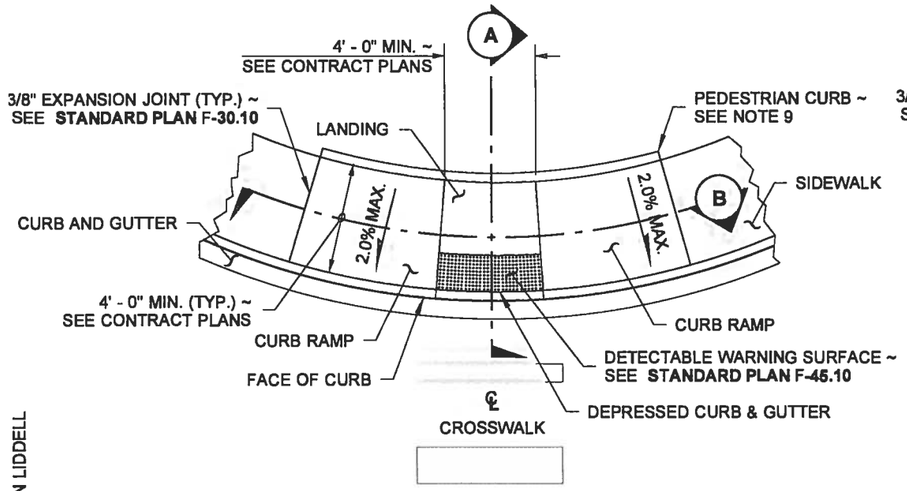

PLAN VIEW
TYPE PARALLEL A

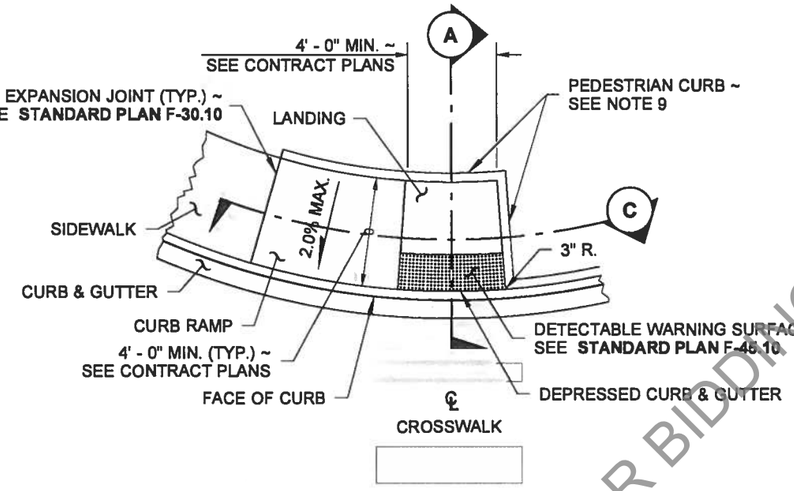

PLAN VIEW
TYPE PARALLEL B

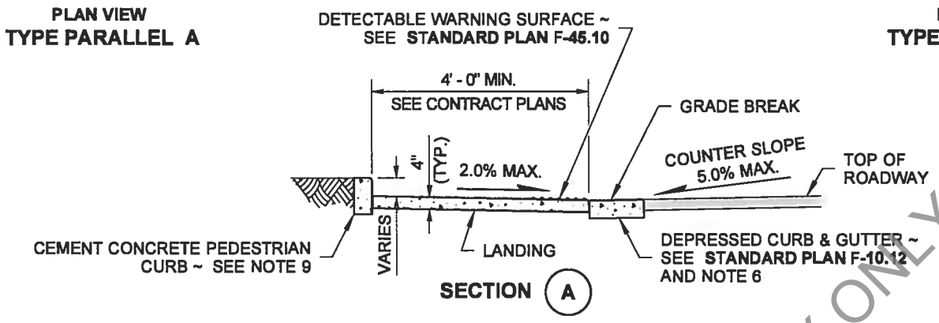

SECTION A

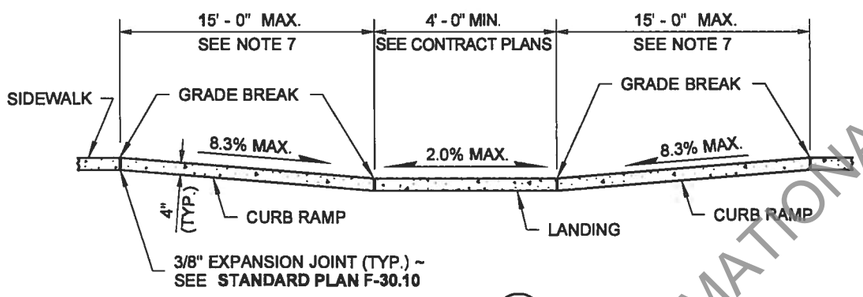

SECTION B

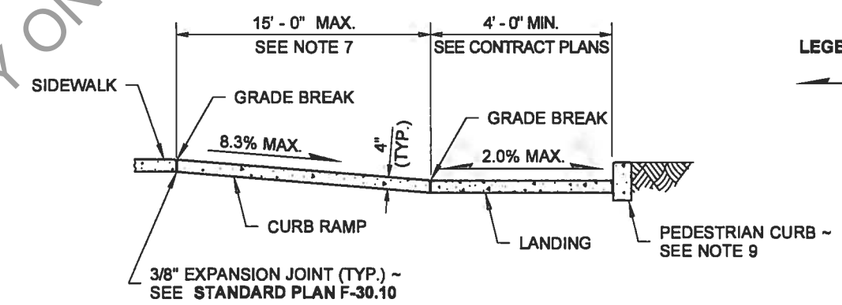

SECTION C

LEGEND

SLOPE IN EITHER DIRECTION

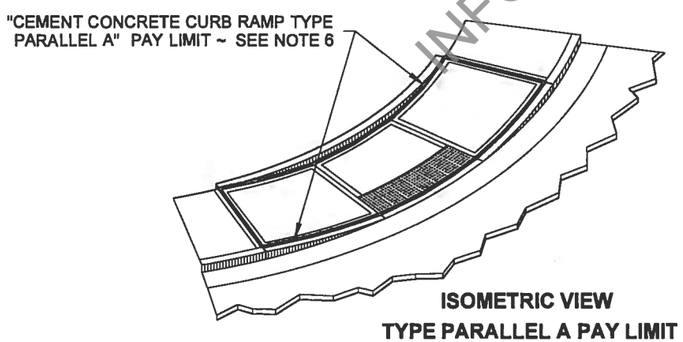

ISOMETRIC VIEW
TYPE PARALLEL A PAY LIMIT

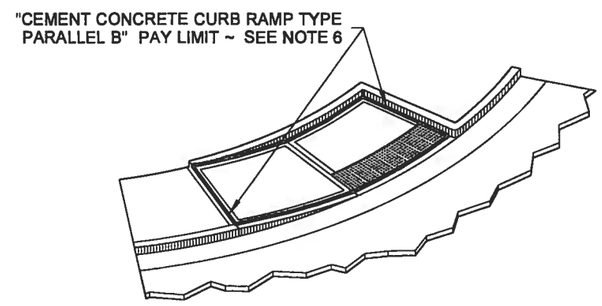

ISOMETRIC VIEW
TYPE PARALLEL B PAY LIMIT

NOTES

1. Provide a separate Curb Ramp for each marked or unmarked crosswalk. Curb Ramp location shall be placed within the width of the associated crosswalk, or as shown in the Contract Plans.
2. Where "GRADE BREAK" is called out, the entire length of the grade break between the two adjacent surface planes shall be flush.
3. Do not place Gratings, Junction Boxes, Access Covers, or other appurtenances in front of the Curb Ramp or on any part of the Curb Ramp or Landing.
4. See Contract Plans for the curb design specified. See **Standard Plan F-10.12** for Curb, Curb and Gutter, Depressed Curb and Gutter, and Pedestrian Curb details.
5. See **Standard Plan F-30.10** for Cement Concrete Sidewalk Details. See Contract Plans for width and placement of sidewalk.
6. The Bid Item "Cement Concrete Curb Ramp Type __" does not include the adjacent Curb, Curb and Gutter, Depressed Curb and Gutter, Pedestrian Curb, or Sidewalks.
7. The Curb Ramp maximum running slope shall not require the ramp length to exceed 15 feet to avoid chasing the slope indefinitely when connecting to steep grades. When applying the 15-foot max. length, the running slope of the curb ramp shall be as flat as feasible.
8. Curb Ramp, Landing, and Flares shall receive broom finish. See **Standard Specifications 8-14.**
9. Pedestrian Curb may be omitted if the ground surface at the back of the Curb Ramp and/or Landing will be at the same elevation as the Curb Ramp or Landing and there will be no material to retain.

DRAWN BY: FERN LIDDELL

INFORMATIONAL COPY ONLY - NOT FOR BIDDING

NOTE: THIS PLAN IS NOT A LEGAL ENGINEERING DOCUMENT BUT AN ELECTRONIC DUPLICATE. THE ORIGINAL, SIGNED BY THE ENGINEER AND APPROVED FOR PUBLICATION, IS KEPT ON FILE AT THE WASHINGTON STATE DEPARTMENT OF TRANSPORTATION. A COPY MAY BE OBTAINED UPON REQUEST.

PARALLEL CURB RAMP

STANDARD PLAN F-40.12-02

SHEET 1 OF 1 SHEET

APPROVED FOR PUBLICATION

Pasco Bakotich III — STATE DESIGN ENGINEER — *6/20/13* — DATE

Washington State Department of Transportation

DRAWN BY: FERN LIDDELL

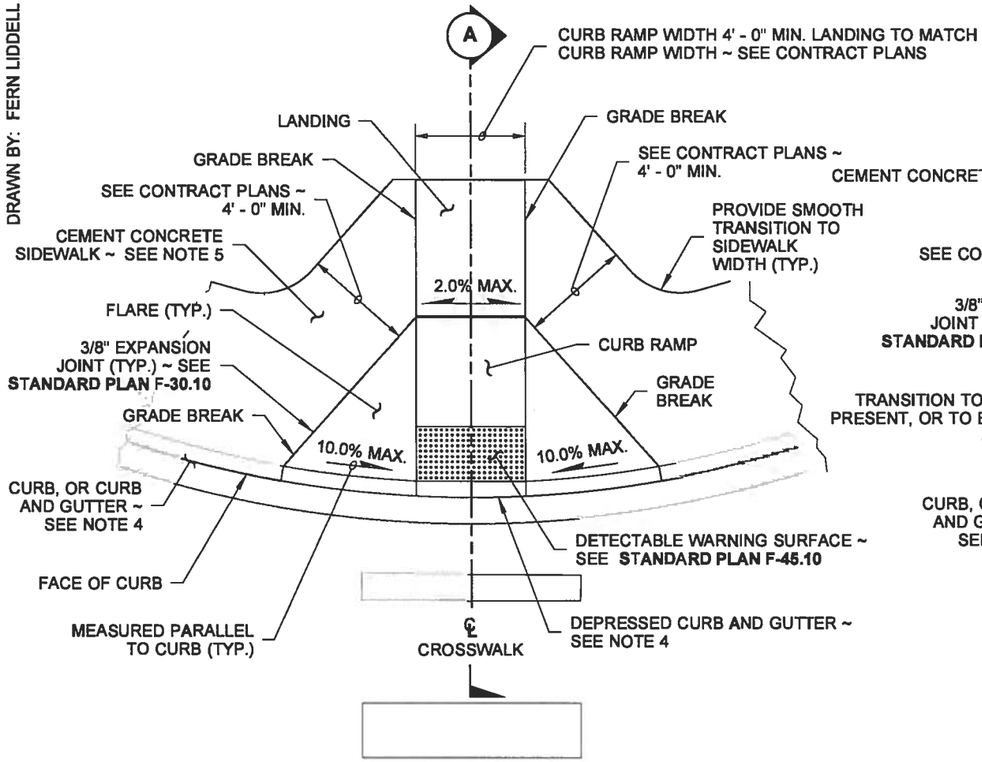

PLAN VIEW
TYPE PERPENDICULAR A

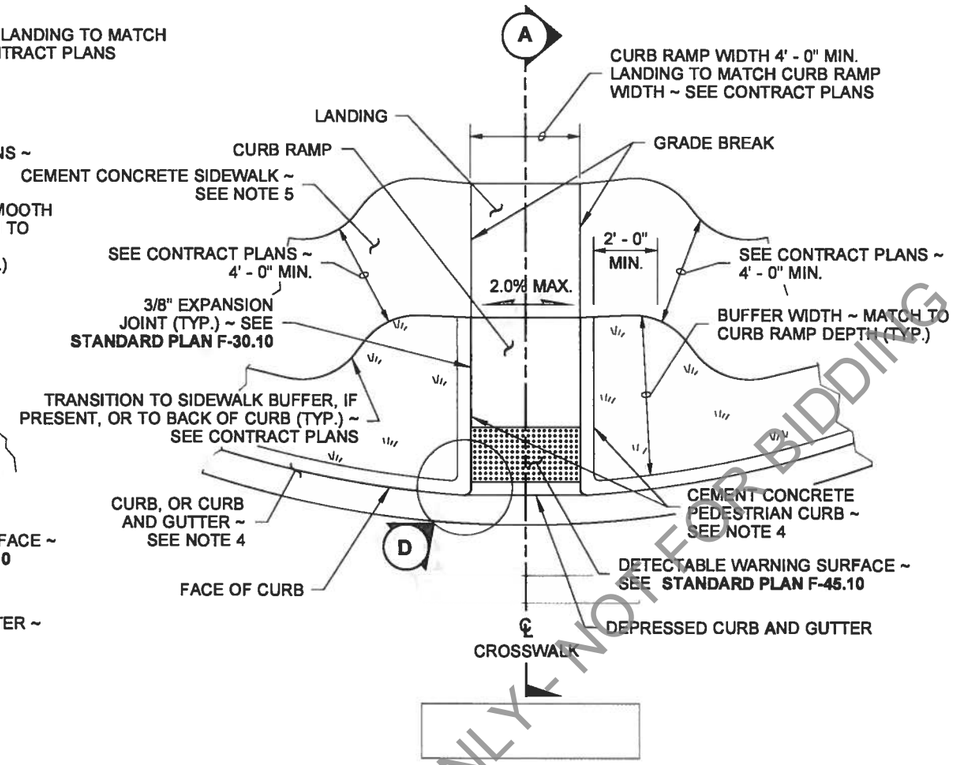

PLAN VIEW
TYPE PERPENDICULAR B
(SHOWN WITH BUFFER)

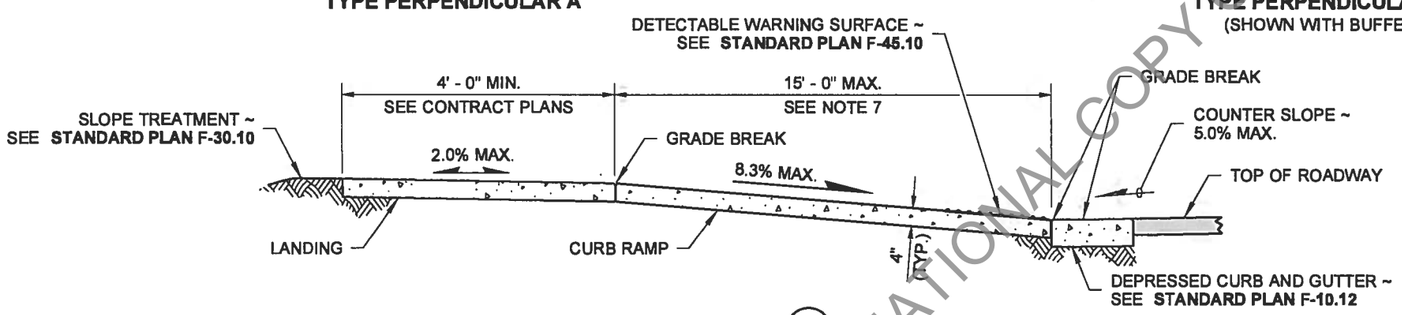

SECTION A

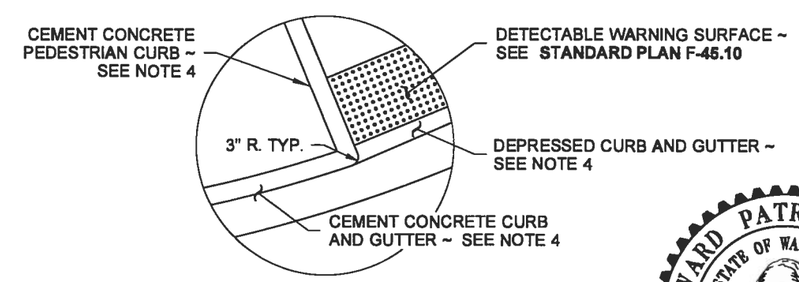

CURB RADIUS DETAIL D

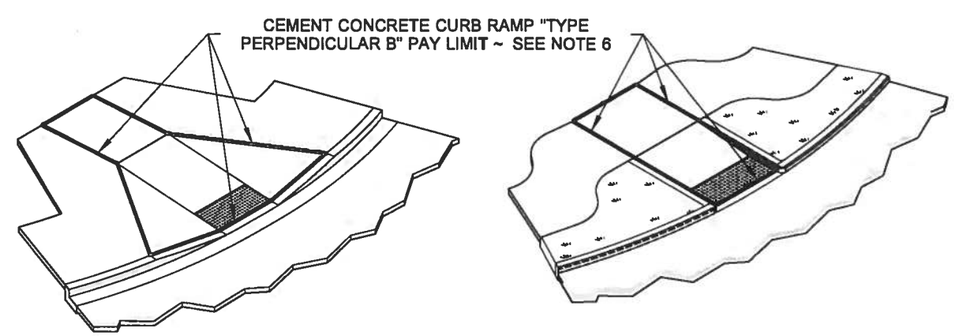

ISOMETRIC VIEW
TYPE PERPENDICULAR A PAY LIMIT

ISOMETRIC VIEW
TYPE PERPENDICULAR B PAY LIMIT

NOTES

1. Provide a separate Curb Ramp for each marked or unmarked crosswalk. Curb Ramp location shall be placed within the width of the associated crosswalk or as shown in the Contract Plans.
2. Where "GRADE BREAK" is called out, the entire length of the grade break between the two adjacent surface planes shall be flush.
3. Do not place Gratings, Junction Boxes, Access Covers, or other appurtenances in front of the Curb Ramp or on any part of the Curb Ramp or Landing.
4. See the Contract Plans for the curb design specified. See **Standard Plan F-10.12** for Curb, Curb and Gutter, Depressed Curb and Gutter, and Pedestrian Curb details.
5. See **Standard Plan F-30.10** for Cement Concrete Sidewalk details. See Contract Plans for width and placement of sidewalk.
6. The Bid Item "Cement Concrete Curb Ramp Type __" does not include the adjacent Curb, Curb and Gutter, Depressed Curb and Gutter, Pedestrian Curb, or Sidewalk.
7. The Curb Ramp maximum running slope shall not require the ramp length to exceed 15-feet to avoid chasing the slope indefinitely when connecting to steep grades. When applying the 15-foot maximum length, the running slope of the Curb Ramp shall as flat as feasible.
8. Curb Ramp, Landing, and Flares shall receive broom finish. See **Standard Specifications 8-14.**

LEGEND

SLOPE IN EITHER DIRECTION

INFORMATIONAL COPY ONLY - NOT FOR BIDDING

NOTE: THIS PLAN IS NOT A LEGAL ENGINEERING DOCUMENT BUT AN ELECTRONIC DUPLICATE. THE ORIGINAL, SIGNED BY THE ENGINEER AND APPROVED FOR PUBLICATION, IS KEPT ON FILE AT THE WASHINGTON STATE DEPARTMENT OF TRANSPORTATION. A COPY MAY BE OBTAINED UPON REQUEST.

PERPENDICULAR CURB RAMP

STANDARD PLAN F-40.15-02

SHEET 1 OF 1 SHEET

APPROVED FOR PUBLICATION

Pasco Bakotich III — STATE DESIGN ENGINEER — *6/20/13* — DATE

Washington State Department of Transportation

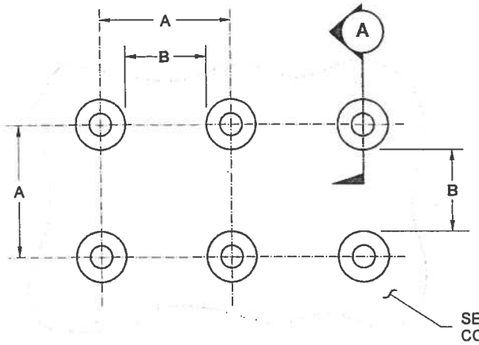

TRUNCATED DOME SPACING
SEE NOTE 3

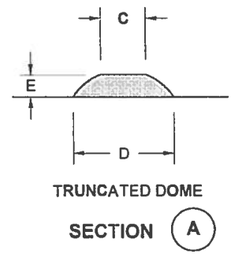

TRUNCATED DOME

SECTION (A)

	MIN.	MAX.
A	1.60"	2.40"
B	0.65"	—
C	0.45"	0.90"
D	0.9"	1.40"
E	0.2"	0.2"

TRUNCATED DOME DETAILS

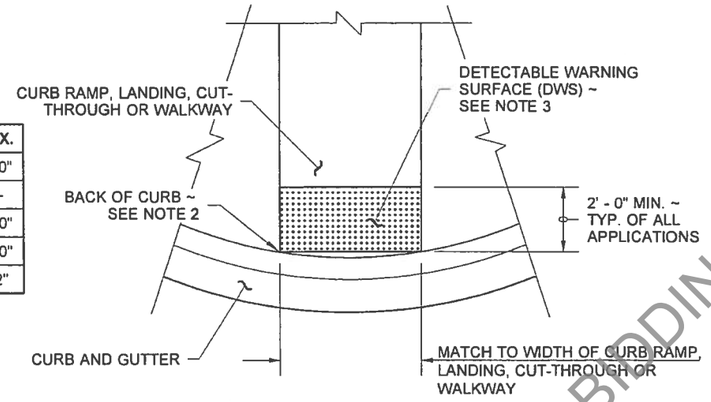

DETECTABLE WARNING SURFACE DETAIL

NOTES

1. The Detectable Warning Surface (DWS) shall extend the full width of the curb ramp (exclusive of flares) or the landing.
2. The Detectable Warning Surface shall be placed at the back of curb, and need not follow the radius.
3. The rows of truncated domes shall be aligned to be perpendicular to the grade break at the back of curb.
4. The rows of truncated domes shall be aligned to be parallel to the direction of travel.
5. If curb and gutter are not present, such as a shared-use path connection, the Detectable Warning Surface shall be placed at the pavement edge.
6. See **Standard Plans** for sidewalk and curb ramp details.
7. If a curb ramp is required, the location of the Detectable Warning Surface must be at the bottom of the ramp and within the required distance from the rail.
8. When the grade break between the curb ramp and the landing is less than or equal to 5 ft. from the back of curb at all points, place the Detectable Warning Surface on the bottom of the curb ramp.

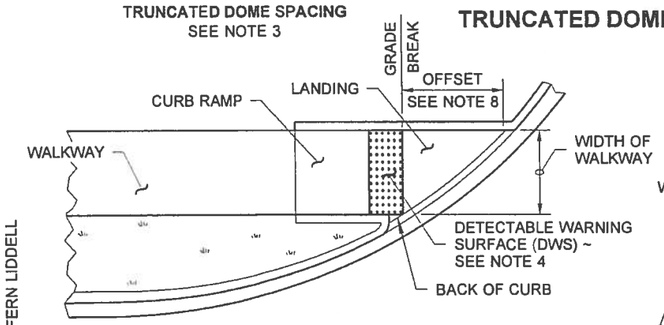

SINGLE DIRECTION CURB RAMP

(GRADE BREAK BETWEEN CURB AND LANDING ≤ 5 FT. FROM BACK OF CURB)
(SEE NOTE 6)

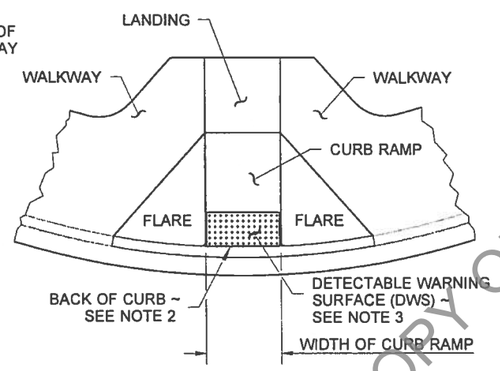

PERPENDICULAR CURB RAMP

(SEE NOTE 6)

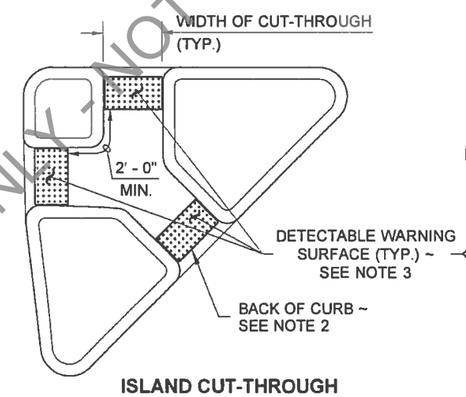

ISLAND CUT-THROUGH

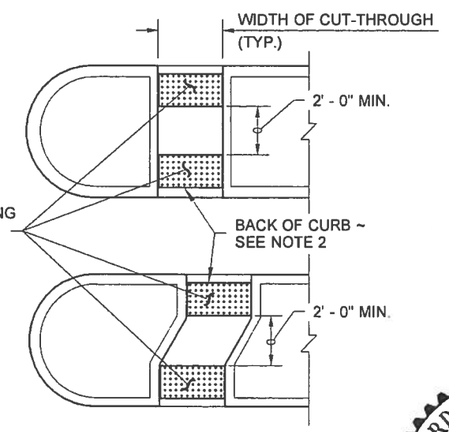

MEDIAN CUT-THROUGH

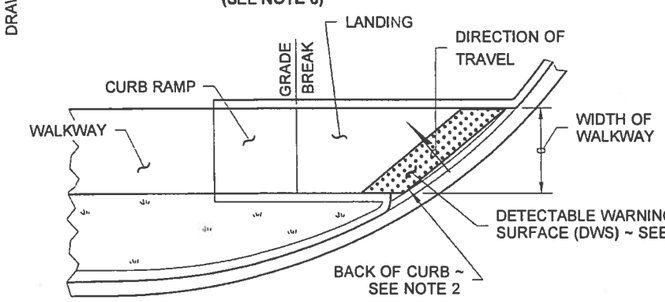

SINGLE DIRECTION CURB RAMP

(GRADE BREAK BETWEEN CURB AND LANDING > 5 FT. FROM BACK OF CURB)
(SEE NOTE 6)

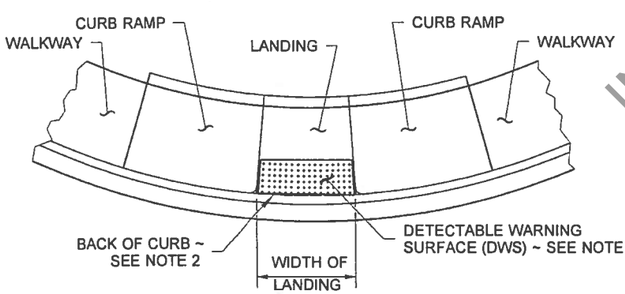

PARALLEL CURB RAMP

(SEE NOTE 6)

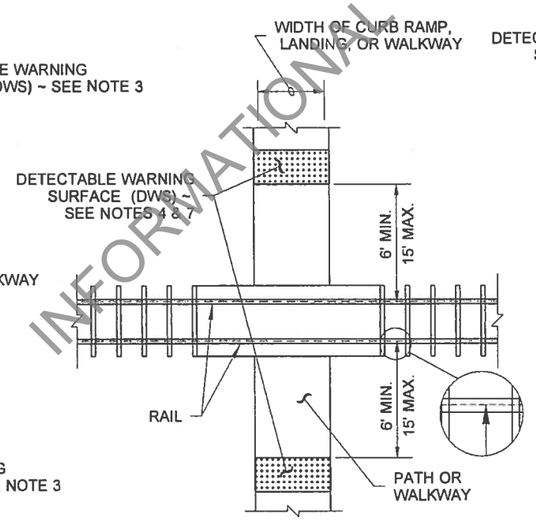

PEDESTRIAN RAILROAD CROSSING

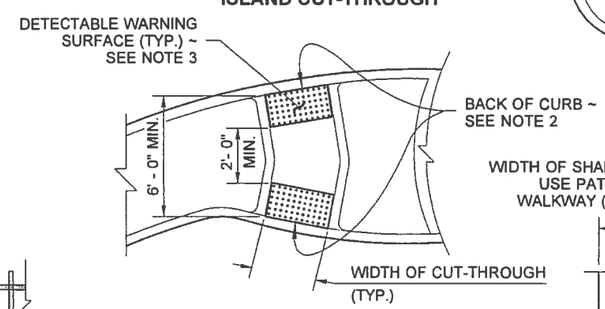

ROUNDABOUT SPLITTER ISLAND

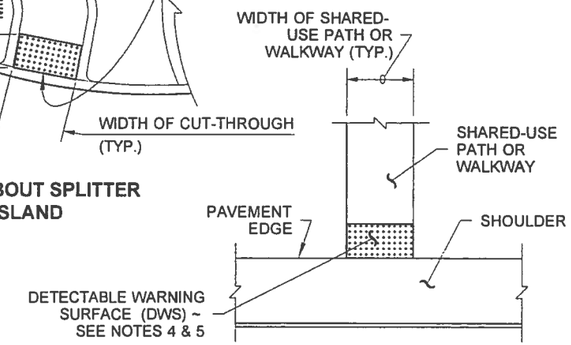

SHARED-USE PATH CONNECTION

PLACEMENT GUIDELINES

6·18·2012

DETECTABLE WARNING SURFACE

STANDARD PLAN F-45.10-01

SHEET 1 OF 1 SHEET

APPROVED FOR PUBLICATION

STATE DESIGN ENGINEER — DATE 6/21/12

Washington State Department of Transportation

DRAWN BY: FERN LIDDELL

INFORMATIONAL COPY ONLY - NOT FOR BIDDING

DRAWN BY: FERN LIDDELL

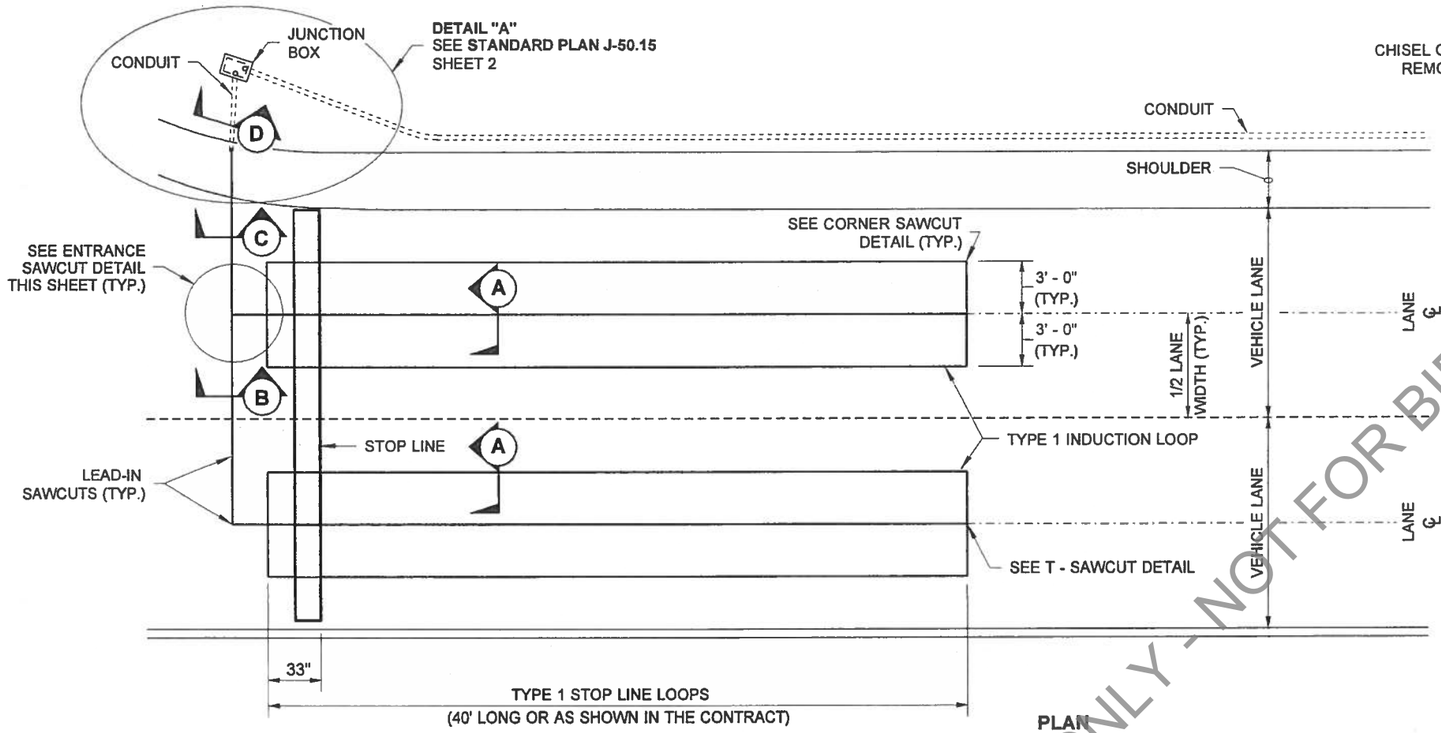

PLAN

TYPE 1 STOP LINE LOOPS

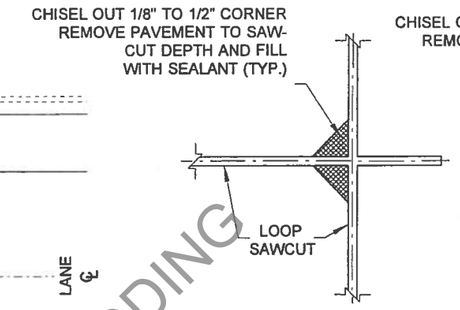

T - SAWCUT DETAIL

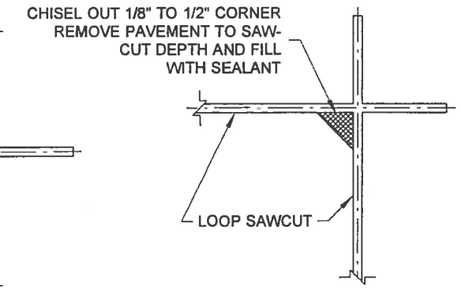

CORNER SAWCUT DETAIL

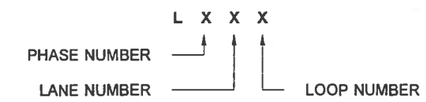

LOOP NUMBER MARKING DETAIL

NOTES

1. For Installation Notes and Details see **Standard Plan J-50.15.**
2. For Sections A, B, C, and D, see **Standard Plan J-50.15.**

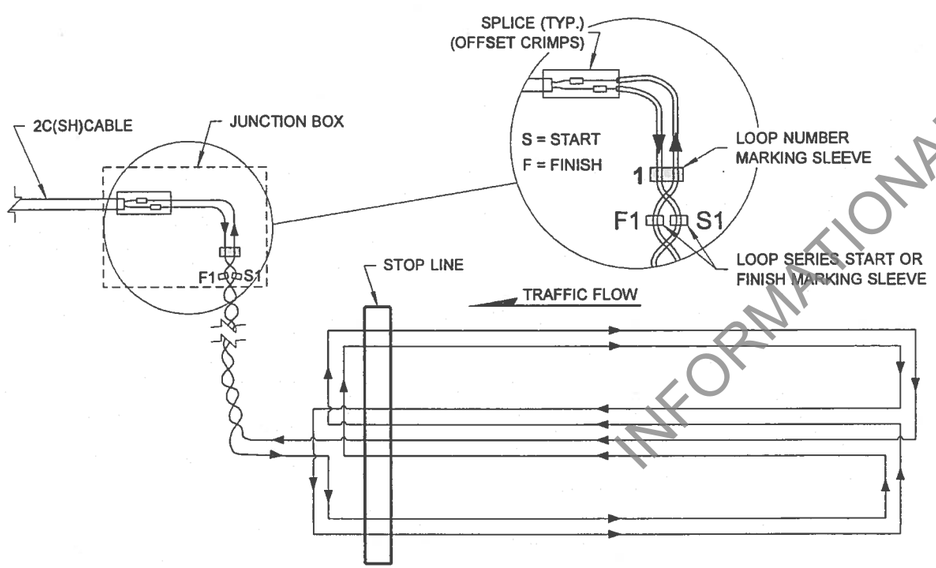

TYPE 1 STOP LINE LOOP WIRING DIAGRAM

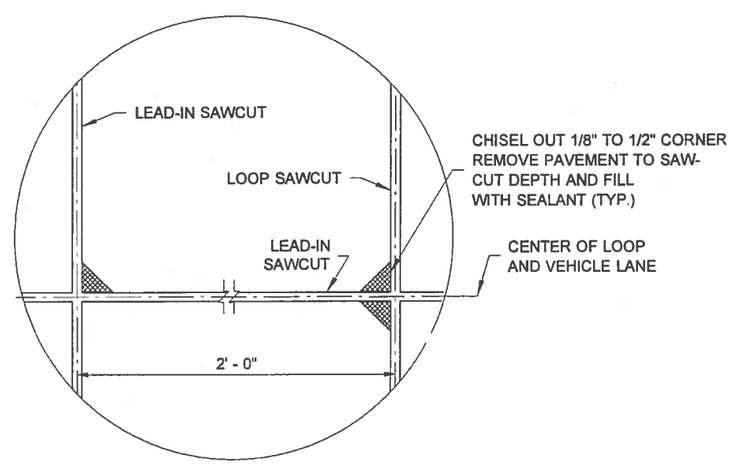

ENTRANCE SAWCUT DETAIL

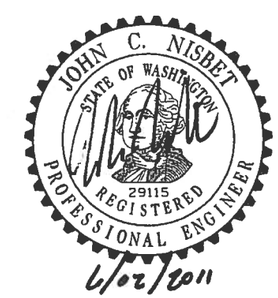

TYPE 1 INDUCTION LOOP

STANDARD PLAN J-50.10-00

SHEET 1 OF 1 SHEET

APPROVED FOR PUBLICATION

STATE DESIGN ENGINEER — DATE 6/3/11

Washington State Department of Transportation

INFORMATIONAL COPY ONLY - NOT FOR BIDDING

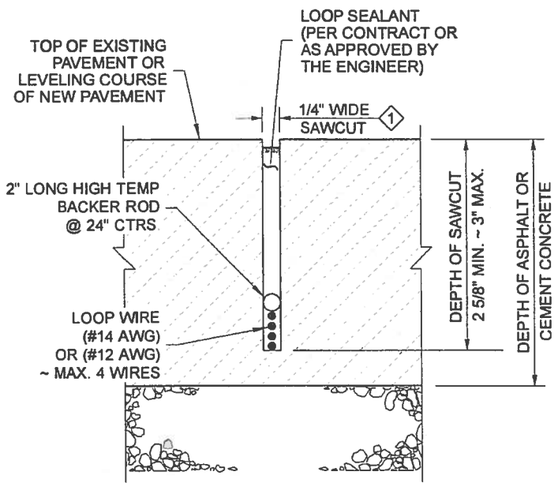

SECTION A

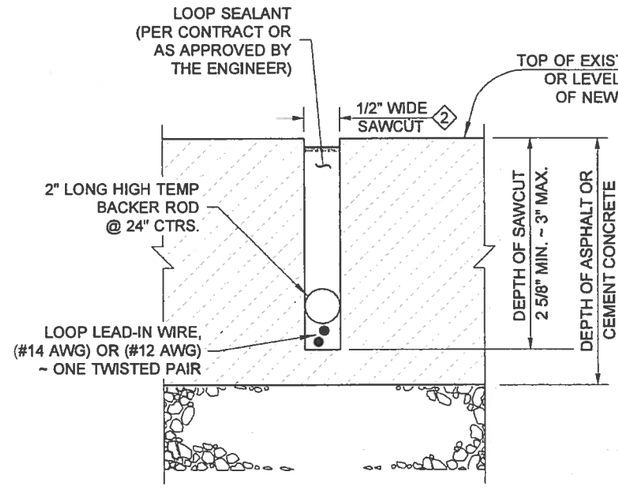

SECTION B

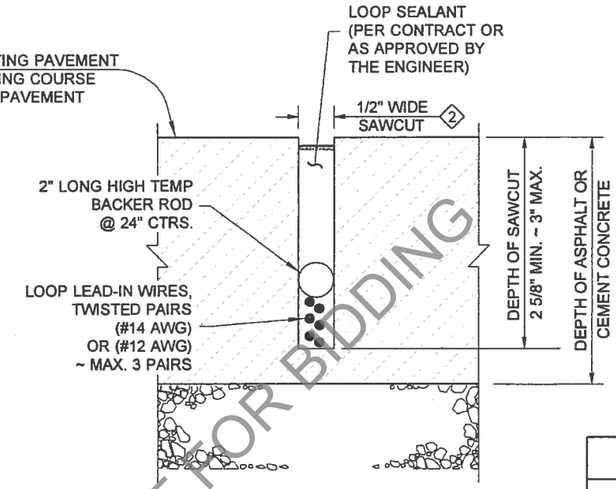

SECTION C

NOTES

1. Fill the conduit trench to the bottom of the existing or new surfacing with CSTC, sand or controlled density fill. See **Standard Specifications Section 2-09.3(1)E**.
2. Minor Regional variations are allowed in the soft pocket closure. Consult with the Engineer or see the Contract for additional requirements.
3. Conductors shall be snug to the bottom of the sawcut. High temperature backer rod shall be snug to the conductors and sides of cut.
4. Fill the sealant to within 1/8" to 3/16" from top of saw cut.
5. See **Standard Plan J-40.10** for additional Junction Box details.

PVC CONDUIT SIZING TABLE

LOOP LEAD PAIRS	1 - 4	5 - 10	11 - 16	17 - 22	23 - 28
NUMBER AND SIZE OF CONDUITS	1 - 2"	2 - 2"	3 - 2"	4 - 2"	3 - 3"

1 ADD 1/16" TO THE SAWCUT FOR IMSA 51 - 7 CONDUCTORS

2 ADD 1/8" TO THE SAWCUT FOR IMSA 51 - 7 CONDUCTORS

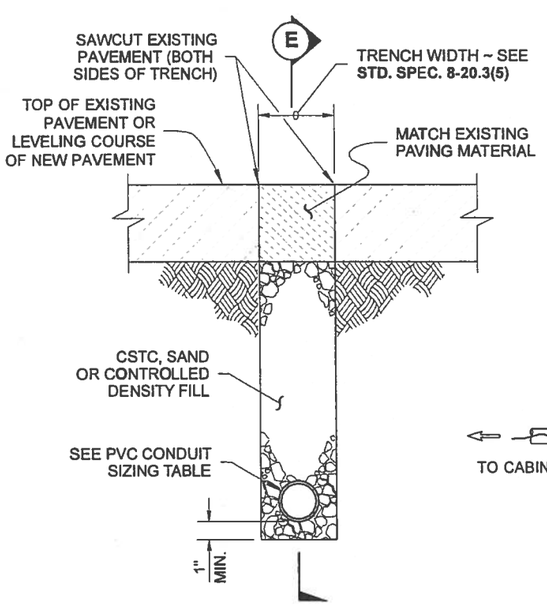

SECTION D

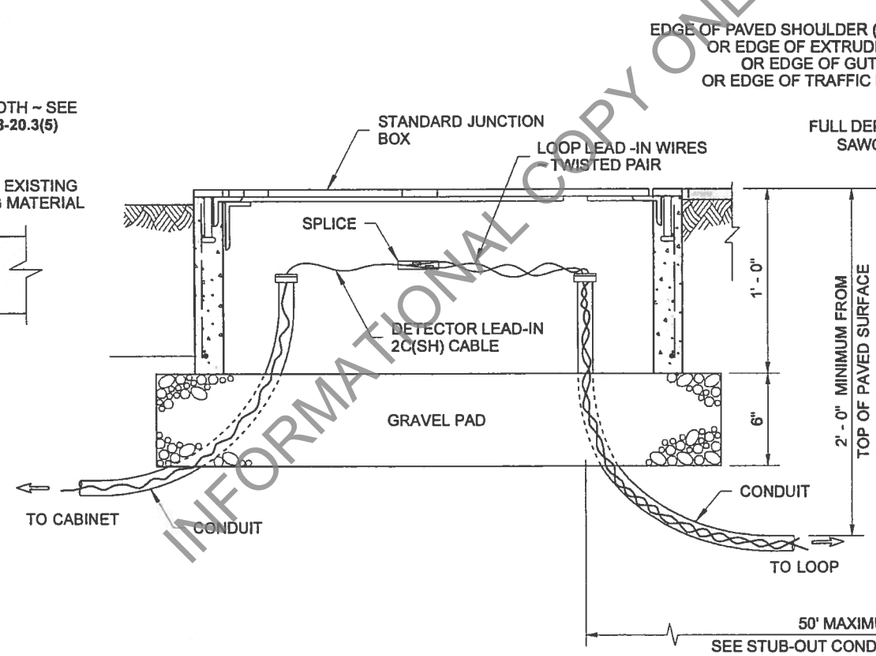

JUNCTION BOX PLACEMENT

SEE NOTE 5

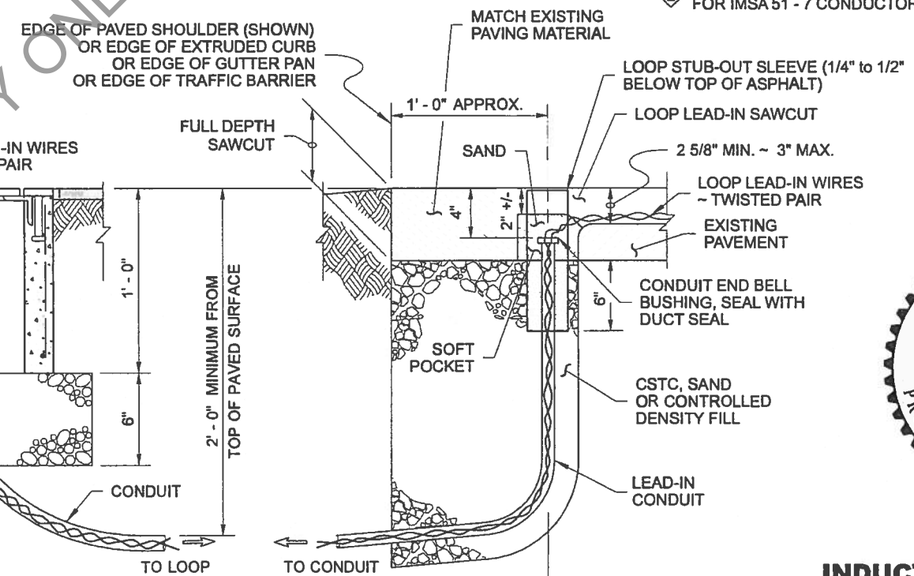

LEAD-IN CONDUIT SECTION

MAX. 50 FT POCKET SECTION

SECTION E

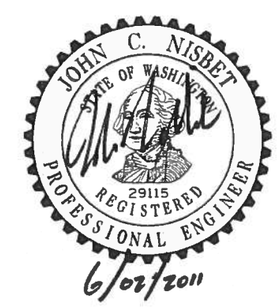

INDUCTION LOOP DETAILS

STANDARD PLAN J-50.15-00

SHEET 1 OF 3 SHEETS

APPROVED FOR PUBLICATION

STATE DESIGN ENGINEER — DATE 6/3/11

Washington State Department of Transportation

INFORMATIONAL COPY ONLY - NOT FOR BIDDING

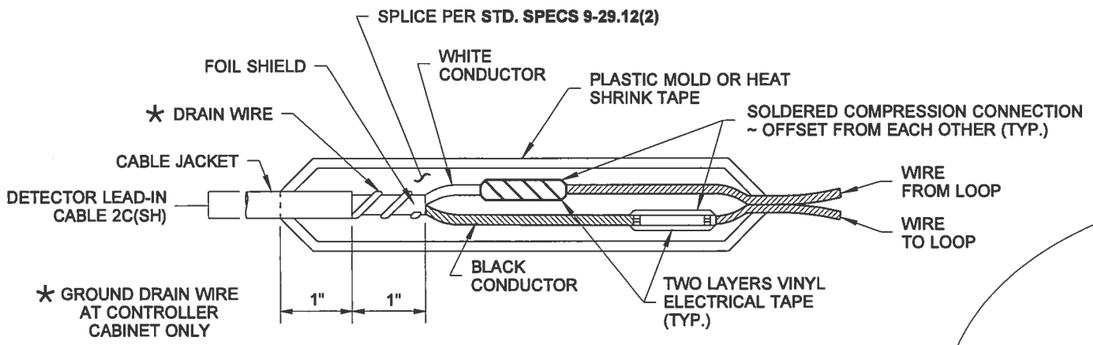

SPLICE DETAIL

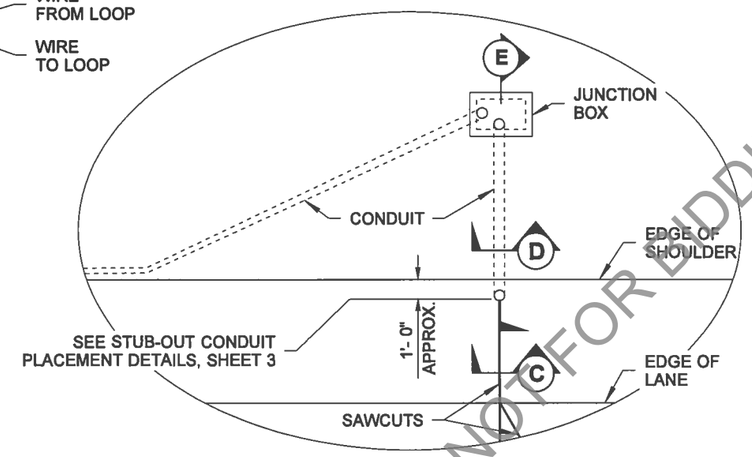

DETAIL "A"

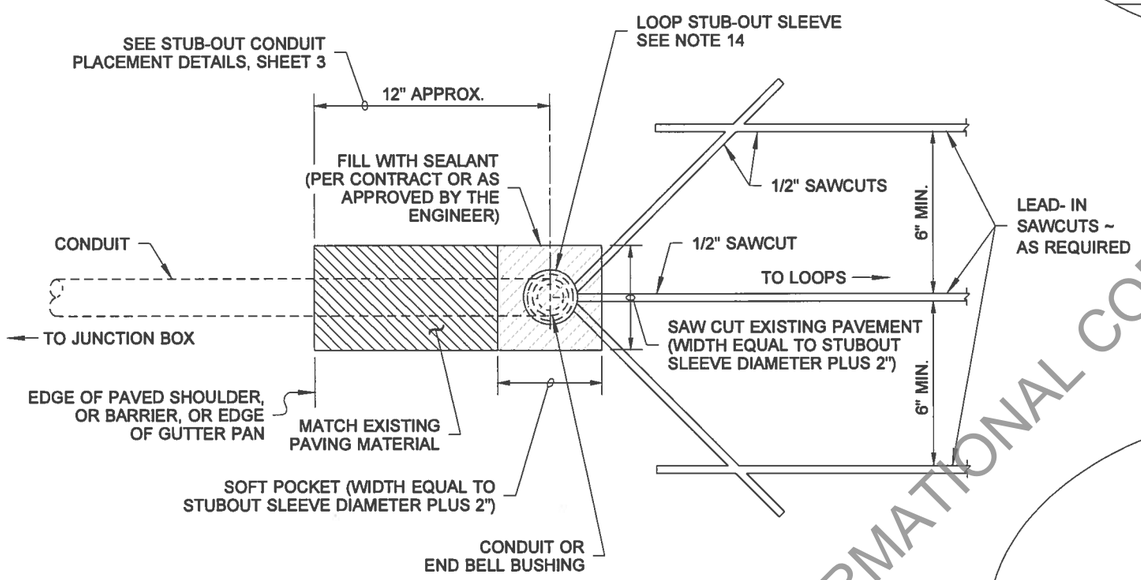

PLAN

SAWCUT AND CONDUIT CONNECTION

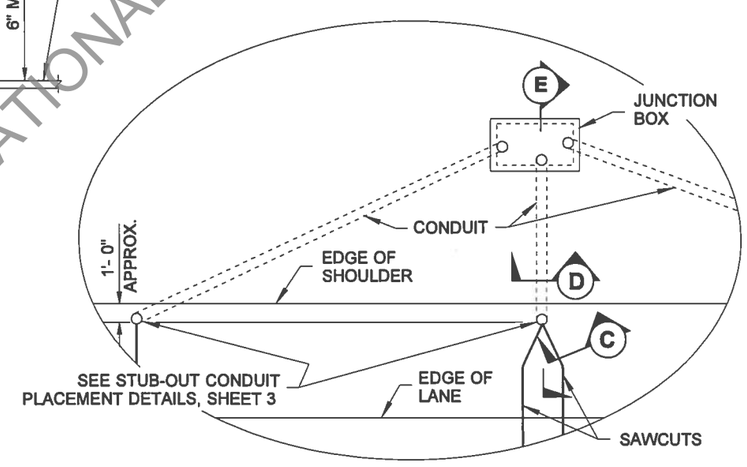

DETAIL "B"

INFORMATIONAL COPY ONLY - NOT FOR BIDDING

LOOP INSTALLATION NOTES

1. Install the Junction Box and the stub-out conduit with PVC sleeve. Conduit for the loop stub-out shall be as required in the conduit size table shown on sheet 1 of this set.
2. Lay out loops and loop lead-ins to miss cracks/joints in road, when possible. Maintain 18" minimum clearance from manholes and valve boxes.
3. The opening around the loop stub shall be patched with matching paving material if opened larger than PVC sleeve + 2".
4. Sawcut the loop slots and the lead-in slots. Wash/dry cuts. File edges to remove burr of all saw-cuts into stub out sleeve.
5. Lay out the loop wire starting at the Junction Box, allowing 5' minimum slack.
6. Install the wire in the loop slot as shown.
7. Finish laying out the wire at the Junction Box and identify the leads with the loop number, the "S" for start and the "F" for the finish, the loop series number, and the loop lead-in conductor number.
8. Twist each pair of the lead-in wires a minimum of two times per foot each foot, from the loop to the Junction Box. Reverse the direction of the twist for each successive pair installed. Seal loops/sawcuts.
9. Construct a supplemental splice containing any series loop connections in the adjacent junction box as required in the plans. Supplemental splices are subject to the same requirements shown for the loop lead-in and the shielded cable splice.
10. Splice the loop lead-ins to the shielded cable as noted in the Contract.
11. All loop circuits shall be tested per **Standard Specifications 8-20.3(14)D** once installation is complete.
12. Existing stubouts shall be upgraded as necessary to conform to the conduit size table shown on sheet 1.
13. All loop lead-in sawcuts parallel to lane edge shall be at least 12" from edge of pavement and within six inches outside of lane or fog line when possible. Maintain 12" separation between parallel cuts or joints.
14. The loop stub-out sleeve shall have an inside diameter 1" larger than the outside diameter of the End Bell Bushing. Plug conduit and fill sleeve with sand untill loops are installed to keep out Hot Asphalt during paving operations.

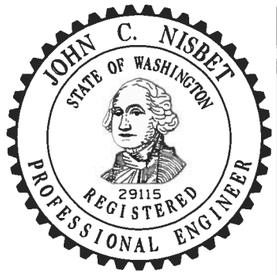

NOTE: THIS PLAN IS NOT A LEGAL ENGINEERING DOCUMENT BUT AN ELECTRONIC DUPLICATE. THE ORIGINAL, SIGNED BY THE ENGINEER AND APPROVED FOR PUBLICATION, IS KEPT ON FILE AT THE WASHINGTON STATE DEPARTMENT OF TRANSPORTATION. A COPY MAY BE OBTAINED UPON REQUEST.

INDUCTION LOOP DETAILS

STANDARD PLAN J-50.15-00

SHEET 2 OF 3 SHEETS

APPROVED FOR PUBLICATION

Pasco Bakotich III — STATE DESIGN ENGINEER

06-03-11 — DATE

Washington State Department of Transportation

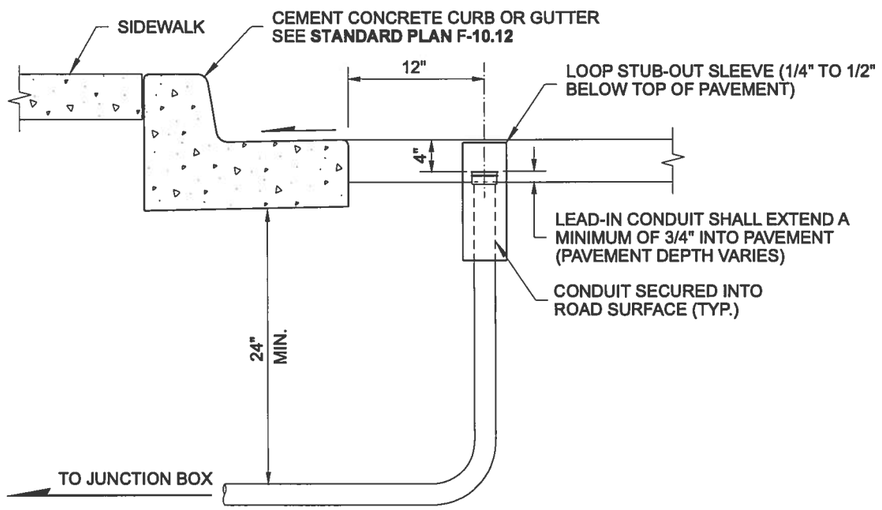

STUB-OUT DETAIL
WITH CEMENT CONCRETE CURB OR GUTTER

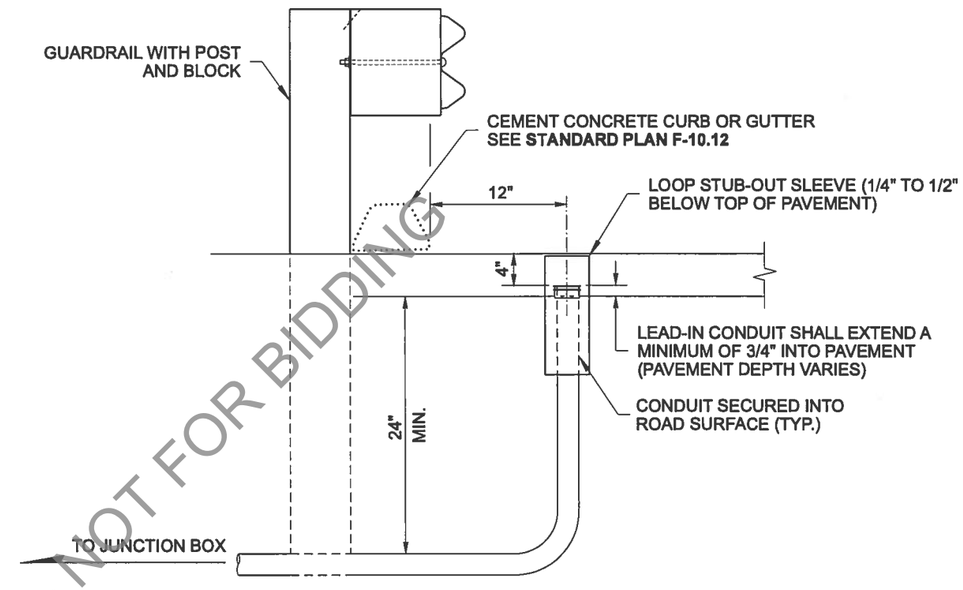

STUB-OUT DETAIL
WITH GUARDRAIL AND CURB

INFORMATIONAL COPY ONLY - NOT FOR BIDDING

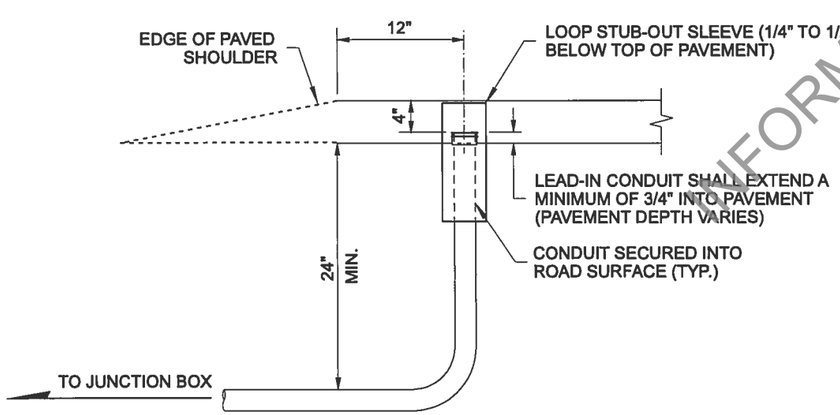

STUB-OUT DETAIL
WITH ROADWAY

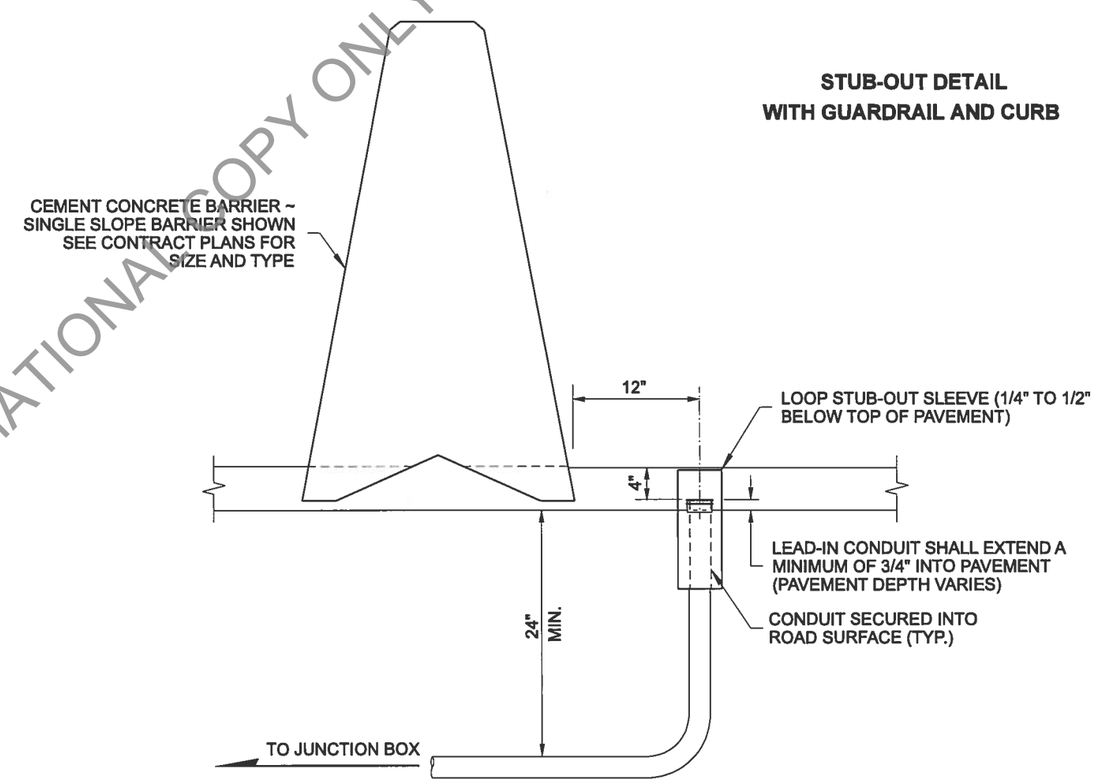

STUB-OUT DETAIL WITH
CEMENT CONCRETE BARRIER

STUBOUT CONDUIT PLACEMENT DETAILS

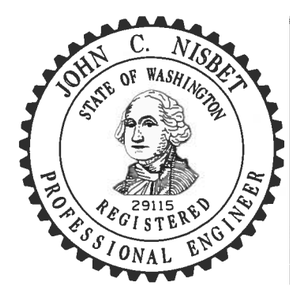

NOTE: THIS PLAN IS NOT A LEGAL ENGINEERING DOCUMENT BUT AN ELECTRONIC DUPLICATE. THE ORIGINAL, SIGNED BY THE ENGINEER AND APPROVED FOR PUBLICATION, IS KEPT ON FILE AT THE WASHINGTON STATE DEPARTMENT OF TRANSPORTATION. A COPY MAY BE OBTAINED UPON REQUEST.

INDUCTION LOOP DETAILS

STANDARD PLAN J-50.15-00

SHEET 3 OF 3 SHEETS

APPROVED FOR PUBLICATION

Pasco Bakotich III — STATE DESIGN ENGINEER
06-03-11 — DATE

Washington State Department of Transportation

BUFFER DATA										
LONGITUDINAL BUFFER SPACE = B										
SPEED (MPH)	25	30	35	40	45	50	55	60	65	70
LENGTH (feet)	155	200	250	305	360	425	495	570	645	-

BUFFER VEHICLE ROLL AHEAD DISTANCE = R	
TRANSPORTABLE ATTENUATOR MINIMUM HOST VEHICLE WEIGHT 15,000 LBS. THE MAXIMUM WEIGHT SHALL BE IN ACCORDANCE WITH THE MANUFACTURERS RECOMMENDATION.	30 FEET MIN. TO 100 FEET MAX.
PROTECTIVE VEHICLE MAY BE A WORK VEHICLE STRATEGICALLY LOCATED TO SHIELD THE WORK AREA.	NO SPECIFIED DISTANCE REQUIRED

SIGN SPACING = X (1)		
RURAL HIGHWAYS	60 / 65 MPH	800' ±
RURAL ROADS	45 / 55 MPH	500' ±
RURAL ROADS & URBAN ARTERIALS	35 / 40 MPH	350' ±
RURAL ROADS, URBAN ARTERIALS, RESIDENTIAL & BUSINESS DISTRICTS	25 / 30 MPH	200' ± (2)
URBAN STREETS	25 MPH OR LESS	100' ± (2)

(1) ALL SPACING MAY BE ADJUSTED TO ACCOMMODATE INTERSECTIONS AND DRIVEWAYS.
(2) THIS SPACING MAY BE REDUCED IN URBAN AREAS TO FIT ROADWAY CONDITIONS.

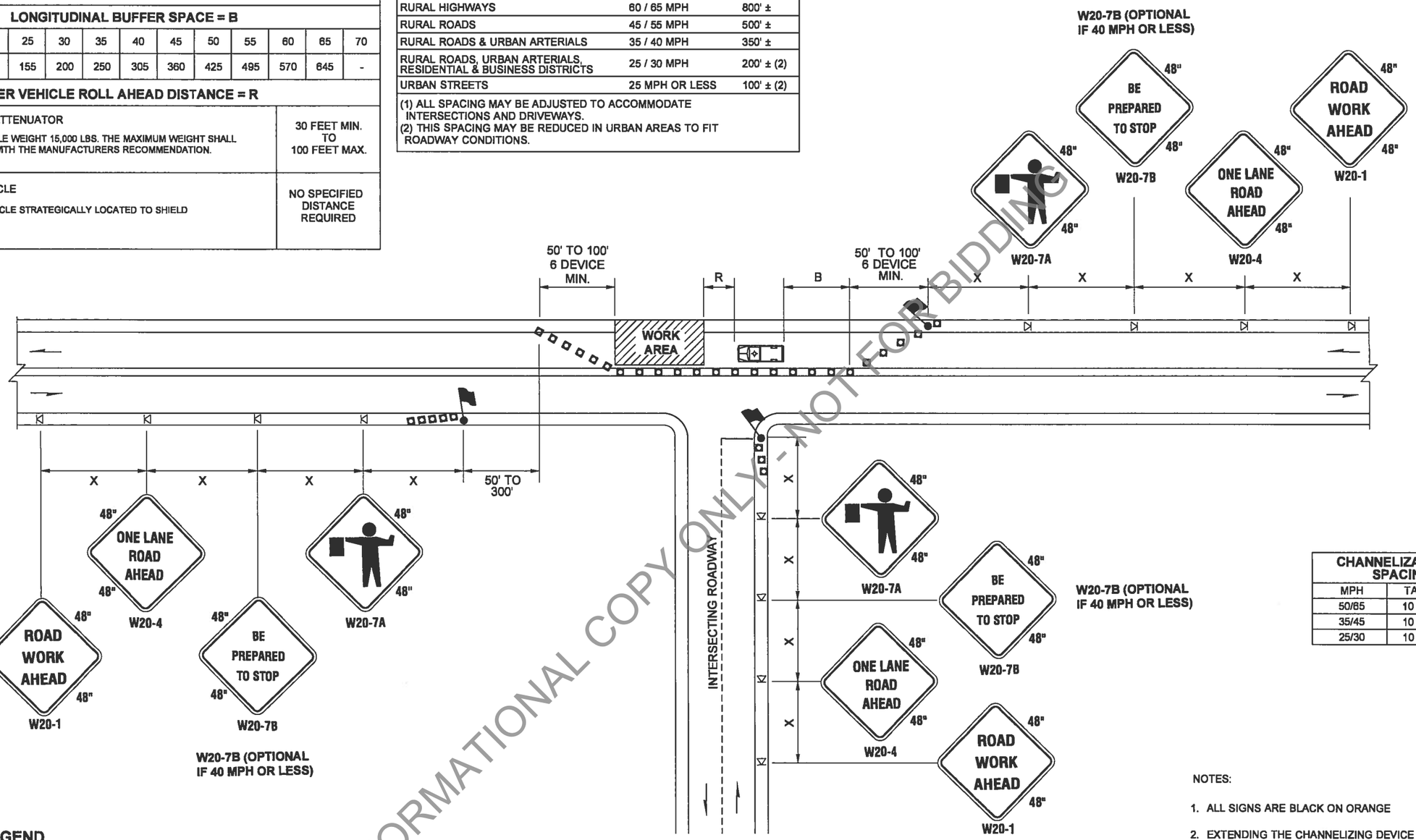

CHANNELIZATION DEVICE SPACING (feet)		
MPH	TAPER	TANGENT
50/65	10 to 20	80
35/45	10 to 20	60
25/30	10 to 20	40

NOTES:

1. ALL SIGNS ARE BLACK ON ORANGE
2. EXTENDING THE CHANNELIZING DEVICE TAPER ACROSS SHOULDER IS RECOMMENDED.
3. NIGHT WORK REQUIRES ADDITIONAL ROADWAY LIGHTING AT FLAGGING STATIONS. SEE THE STANDARD SPECIFICATIONS FOR ADDITIONAL DETAILS.
4. SEE SPECIAL PROVISIONS FOR WORK HOUR RESTRICTIONS.

LEGEND

- FLAGGING STATION
- TEMPORARY SIGN LOCATION
- CHANNELIZING DEVICES
- PROTECTIVE VEHICLE

ONE-LANE, TWO-WAY TRAFFIC CONTROL WITH FLAGGERS

NOT TO SCALE

INFORMATIONAL COPY ONLY - NOT FOR BIDDING

FILE NAME	S:\Design R P& S\4-Standards\2-Plan Sheet Library\10-Work Zone Traffic Control (TC)\TC-1\TC-1.dgn				REGION NO. 10	STATE WASH	FED.AID PROJ.NO.
TIME	10:39:41 AM				JOB NUMBER		
DATE	5/17/2013						
PLOTTED BY	CyfordL						
DESIGNED BY					CONTRACT NO.		LOCATION NO.
ENTERED BY							
CHECKED BY							
PROJ. ENGR.							
REGIONAL ADM.		REVISION	DATE	BY			

P.E. STAMP BOX DATE

P.E. STAMP BOX DATE

Washington State Department of Transportation

TRAFFIC CONTROL PLAN

Plot 1

TC1

SHEET OF SHEETS

SIGN SPACING = X (1)		
RURAL ROADS	45 / 55 MPH	500' ±
RURAL ROADS & URBAN ARTERIALS	35 / 40 MPH	350' ±
RURAL ROADS & URBAN ARTERIALS RESIDENTAL & BUSINESS DISTREICTS	25 / 30 MPH	200' ± (2)
URBAN STREETS	25 MPH OR LESS	100' ± (2)

(1) ALL SPACING MAY BE ADJUSTED TO ACCOMMODATE INTERCHANGE RAMPS, AT-GRADE INTERSECTIONS AND DRIVEWAYS.
(2) THIS SPACING MAY BE REDUCED IN URBAN AREAS TO FIT ROADWAY CONDITIONS.

MINIMUM TAPER LENGTH = L (feet)

LANE WIDTH (feet)	Posted Speed (mph)									
	25	30	35	40	45	50	55	60	65	70
10	105	150	205	270	450	500	-	-	-	-
11	115	165	225	295	495	550	-	-	-	-
12	125	180	245	320	540	600	-	-	-	-

CHANNELIZATION DEVICE SPACING (feet)

MPH	TAPER	TANGENT
50	40	80
35/45	30	60
25/30	20	40

BUFFER DATA

LONGITUDINAL BUFFER SPACE = B

SPEED (MPH)	25	30	35	40	45	50	55	60	65	70
LENGTH (feet)	155	200	250	305	360	425	-	-	-	-

BUFFER VEHICLE ROLL AHEAD DISTANCE = R

TRANSPORTABLE ATTENUATOR MINIMUM HOST VEHICLE WEIGHT 15,000 LBS. THE MAXIMUM WEIGHT SHALL BE IN ACCORDANCE WITH THE MANUFACTURERS RECOMMENDATION.	30 FEET MIN. TO 100 FEET MAX.
PROTECTIVE VEHICLE MAY BE A WORK VEHICLE STRATEGICALLY LOCATED TO SHIELD THE WORK AREA.	NO SPECIFIED DISTANCE REQUIRED

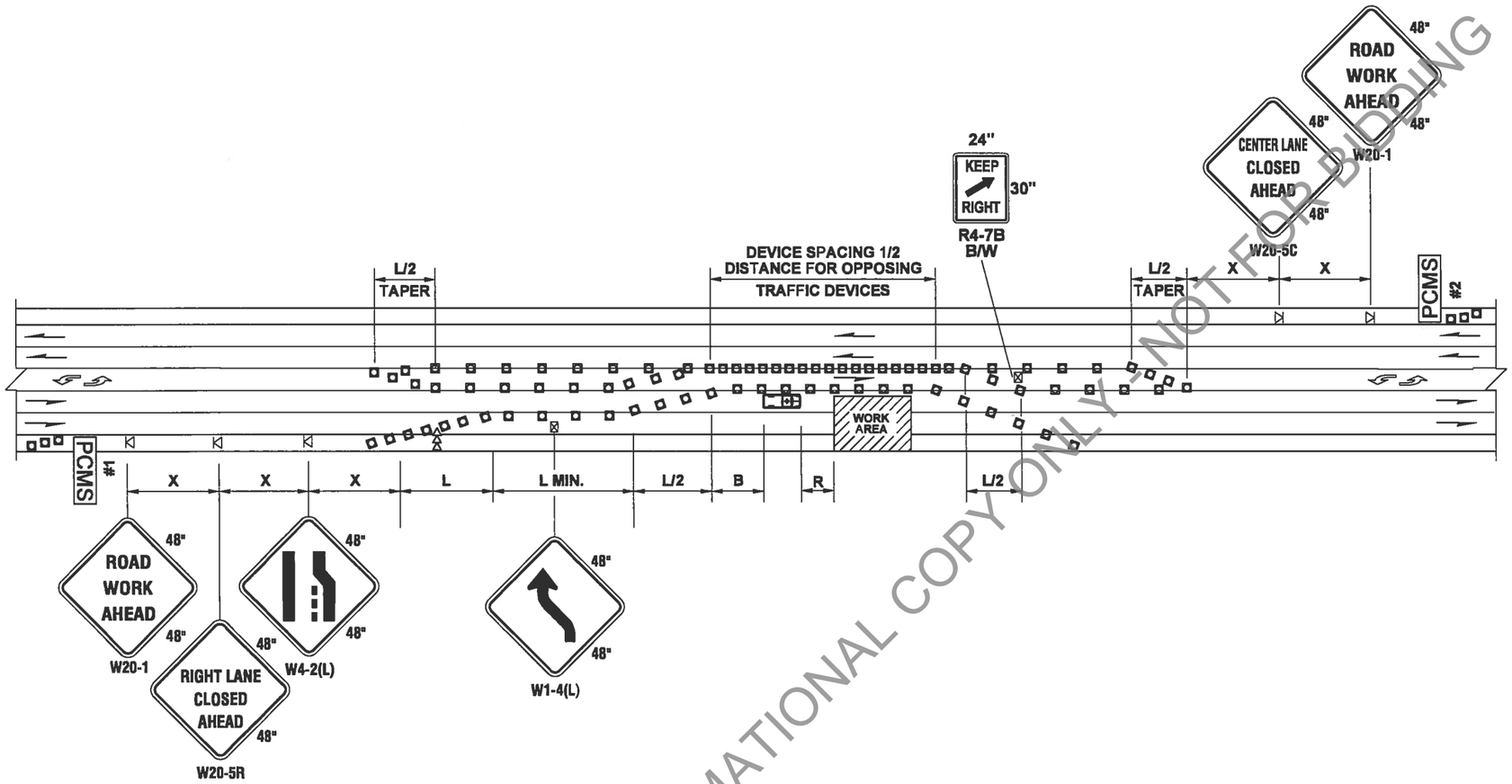

PCMS #1	
1	2
RIGHT LANE CLOSURE	1 MILE AHEAD
2.0 SEC	2.0 SEC

FIELD LOCATE IN ADVANCE OF TEMPORARY SIGNS.

PCMS #2	
1	2
CENTER LANE CLOSED	NO LEFT TURNING
2.0 SEC	2.0 SEC

FIELD LOCATE IN ADVANCE OF TEMPORARY SIGNS.

LEGEND

- TEMPORARY SIGN LOCATION
- CHANNELIZING DEVICES
- SEQUENTIAL ARROW SIGN
- PROTECTIVE VEHICLE
- PCMS — PORTABLE CHANGEABLE MESSAGE SIGN
- TEMPORARY SIGN LOCATION (5' MOUNTING HEIGHT)

NOTES:

1. NO FLAGGER'S OR SPOTTERS.
2. RECOMMEND EXTENDING DEVICE TAPER (L/3) ACROSS SHOULDER.
3. FOR POSTED SPEED LIMITS OF 30 MPH OR LESS, USE SIGN W1-3 IN LIEU OF SIGN W1-4.
4. ALL SIGNS ARE BLACK ON ORANGE UNLESS OTHERWISE DESIGNATED.
5. SEE SPECIAL PROVISIONS FOR WORK HOUR RESTRICTIONS.

RIGHT LANE CLOSURE WITH SHIFT - 5 LANE ROADWAY

NOT TO SCALE

INFORMATIONAL COPY ONLY - NOT FOR BIDDING

FILE NAME	S:\Design R P& S\4-Standards\2-Plan Sheet Library\10-Work Zone Traffic Control (TC)\TC-10\TC-10.dgn				
TIME	11:17:08 AM				
DATE	5/17/2013				
PLOTTED BY	CyfordL				
DESIGNED BY					
ENTERED BY					
CHECKED BY					
PROJ. ENGR.					
REGIONAL ADM.		REVISION	DATE	BY	

REGION NO.	STATE	FED.AID PROJ.NO.
10	WASH	
JOB NUMBER		
CONTRACT NO.		LOCATION NO.

P.E. STAMP BOX — DATE

P.E. STAMP BOX — DATE

Washington State Department of Transportation

TRAFFIC CONTROL PLAN

Plot 1

TC10

SHEET OF SHEETS

BUFFER DATA										
LONGITUDINAL BUFFER SPACE = B										
SPEED (MPH)	25	30	35	40	45	50	55	60	65	70
LENGTH (feet)	155	200	250	305	360	425	-	-	-	-

BUFFER VEHICLE ROLL AHEAD DISTANCE = R	
TRANSPORTABLE ATTENUATOR MINIMUM HOST VEHICLE WEIGHT 15,000 LBS. THE MAXIMUM WEIGHT SHALL BE IN ACCORDANCE WITH THE MANUFACTURERS RECOMMENDATION.	30 FEET MIN. TO 100 FEET MAX.
PROTECTIVE VEHICLE MAY BE A WORK VEHICLE STRATEGICALLY LOCATED TO SHIELD THE WORK AREA.	NO SPECIFIED DISTANCE REQUIRED

SIGN SPACING = X (1)		
RURAL ROADS	45 / 55 MPH	500' ±
RURAL ROADS & URBAN ARTERIALS	35 / 40 MPH	350' ±
RURAL ROADS & URBAN ARTERIALS RESIDENTAL & BUSINESS DISTREICTS	25 / 30 MPH	200' ± (2)
URBAN STREETS	25 MPH OR LESS	100' ± (2)

(1) ALL SPACING MAY BE ADJUSTED TO ACCOMMODATE INTERCHANGE RAMPS, AT-GRADE INTERSECTIONS AND DRIVEWAYS.
(2) THIS SPACING MAY BE REDUCED IN URBAN AREAS TO FIT ROADWAY CONDITIONS.

MINIMUM TAPER LENGTH = L (feet)										
LANE WIDTH (feet)	Posted Speed (mph)									
	25	30	35	40	45	50	55	60	65	70
10	105	150	205	270	450	500	-	-	-	-
11	115	165	225	295	495	550	-	-	-	-
12	125	180	245	320	540	600	-	-	-	-

CHANNELIZATION DEVICE SPACING (feet)		
MPH	TAPER	TANGENT
50	40	80
35/45	30	60
25/30	20	40

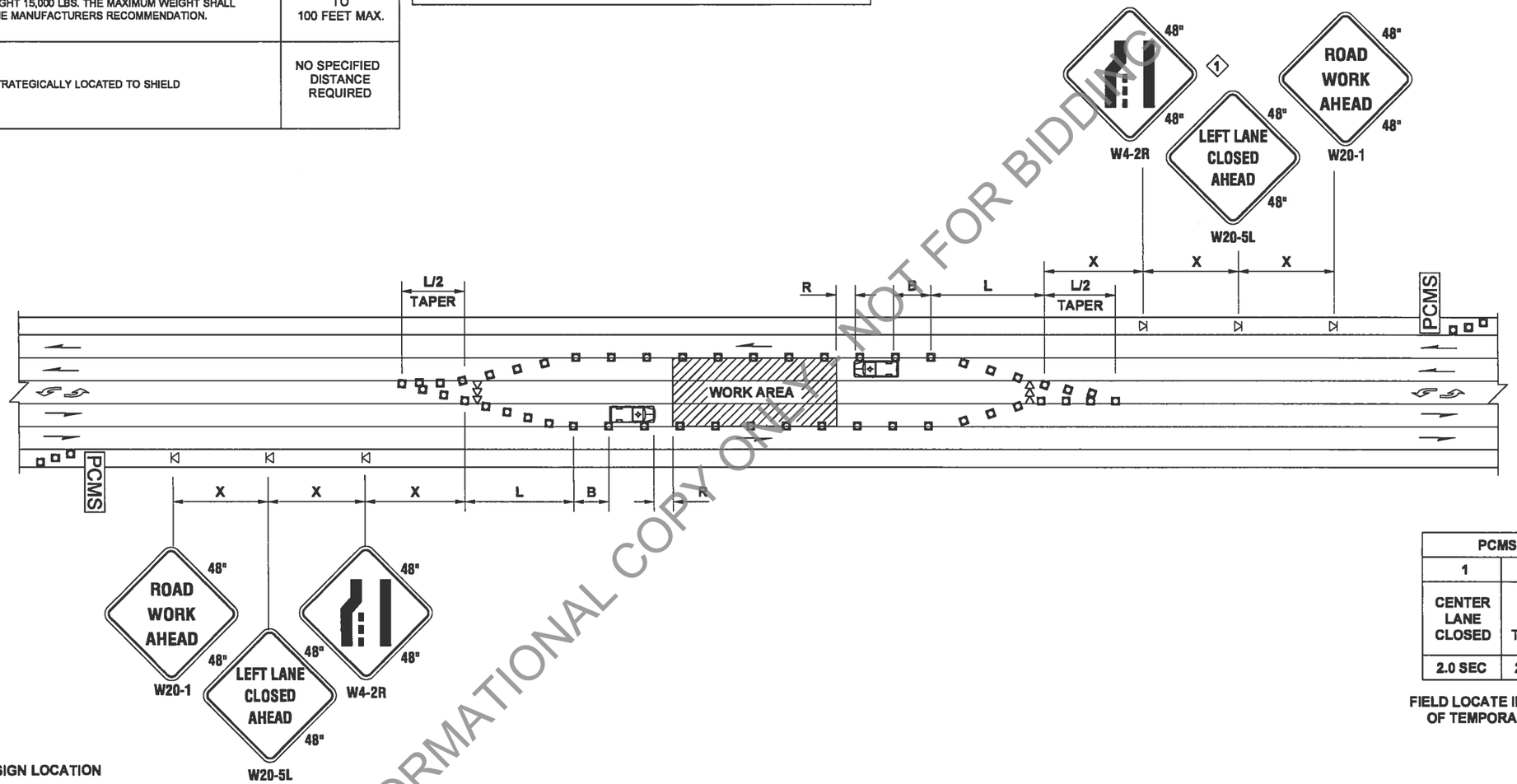

PCMS	
1	2
CENTER LANE CLOSED	NO LEFT TURNING
2.0 SEC	2.0 SEC

FIELD LOCATE IN ADVANCE OF TEMPORARY SIGNS.

LEGEND

- TEMPORARY SIGN LOCATION
- CHANNELIZING DEVICES
- SEQUENTIAL ARROW SIGN
- PROTECTIVE VEHICLE
- PCMS — PORTABLE CHANGEABLE MESSAGE SIGN

LEFT LANE AND CENTER TURN LANE CLOSURE - 5 LANE ROADWAY

NOT TO SCALE

NOTES:

1. NO FLAGGER'S OR SPOTTERS.
2. ALL SIGNS ARE BLACK ON ORANGE.
3. SEE SPECIAL PROVISIONS FOR WORK HOUR RESTRICTIONS.

INFORMATIONAL COPY ONLY - NOT FOR BIDDING

FILE NAME	S:\Design R P& S\4-Standards\2-Plan Sheet Library\10-Work Zone Traffic Control (TC)\TC-11\TC-11.dgn
TIME	11:18:45 AM
DATE	5/17/2013
PLOTTED BY	CyfordL
DESIGNED BY	
ENTERED BY	
CHECKED BY	
PROJ. ENGR.	
REGIONAL ADM.	

REVISION | DATE | BY

REGION NO. 10 | STATE WASH | FED.AID PROJ.NO.

JOB NUMBER

CONTRACT NO. | LOCATION NO.

P.E. STAMP BOX DATE

P.E. STAMP BOX DATE

Washington State Department of Transportation

TRAFFIC CONTROL PLAN

TC11

SHEET OF SHEETS

STRATFORD RD. & PATTON BLVD.
GRIND/INLAY PROJECT

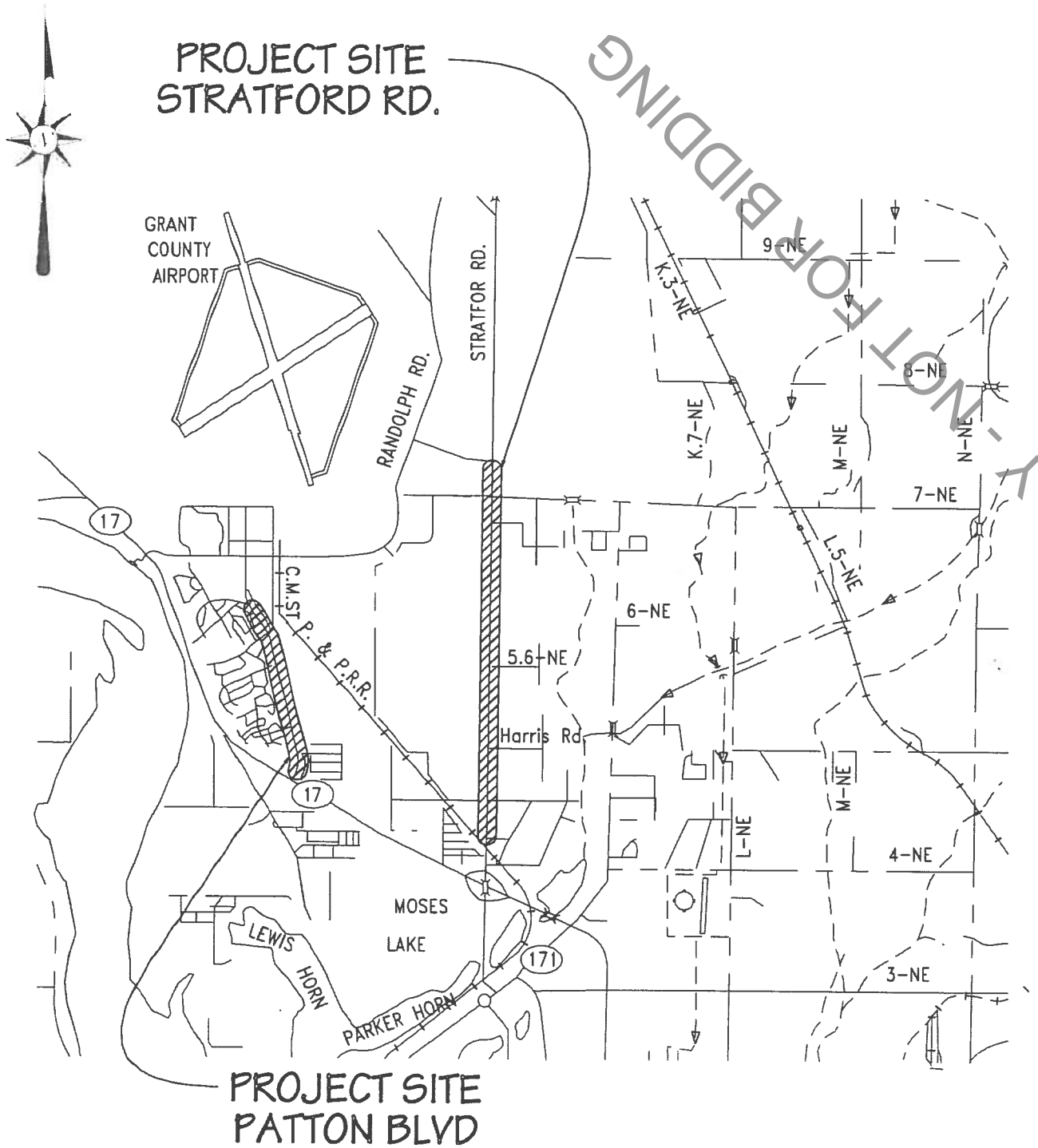

FOR INFORMATIONAL ONLY - NOT FOR BIDDING

SHEET	DESCRIPTION
1 —	INDEX & VICINITY MAP
2 —	SUMMARY OF QUANTITIES
3-8 —	PLAN VIEW, STRATFORD ROAD
9-11 —	PLAN VIEW, PATTON BLVD.
12-13 —	TYPICAL X-SECTIONS
13 —	PLANING DETAILS

Federal Aid No.
STPUS-6081(002)
STPUS-STPR-Z913(002)

Contract No.
TA-5518
TA-5520

Grant County
Board Of Commissioners

Richard Stevens, District No. 1
Carolann Swartz, District No. 2 (Chair)
Cindy Carter, District No. 3

GRANT COUNTY PUBLIC WORKS DEPARTMENT
124 ENTERPRISE ST. SE
EPHRATA, WASHINGTON 98823
(509) 754-6082 FAX (509) 754-6087

STRATFORD RD, CRP 14-02
(M. L. City Limits to Tyndall Rd.)
&
PATTON BLVD., CRP 14-03
(SR-17 to Craig St.)
GRIND/INLAY PROJECT

DESIGNED BY:	BOB BERSANTI
CHECKED BY:	TODD MITTGE
APPROVED BY:	JEFF TINCHER
REVISIONS BY:	
DATE REVISED:	08/27/2014
FEDERAL AID NO.:	STPUS-6081(002)

JEFFREY C. TINCHER
STATE OF WASHINGTON
42338
REGISTERED
PROFESSIONAL ENGINEER
8/28/14

SHEET 1
OF 13

SUMMARY OF QUANTITIES

ITEM NO.	TOTAL QUANTITY	UNIT	ITEM DESCRIPTION	Group #1 Stratford Rd. STA. 6+62 TO STA. 181+91	Group #2 Patton Blvd. STA. 10+00 TO STA. 94+48				
			PREPARATION						
1	100%	L.S.	Mobilization	50%	50%				
2	100%	L.S.	Notification	50%	50%				
3	100%	L.S.	Removal of Structure and Obstruction		100%				
			SURFACING						
4	75	C.Y.	Crushed Surfacing Top Course	15	60				
			HOT MIX ASPHALT						
5	101,258	S.Y.	Planing Bituminous Pavement	53,750	47,508				
6	11,950	TON	HMA Class 1/2 In. PG64-28	6,350	5,600				
7	-2	CALC.	Job Mix Compliance Price Adjustment	-1	-1				
8	-2	CALC.	Compaction Price Adjustment	-1	-1				
			TRAFFIC						
9	25,808	L.F.	Temporary Pavement Marking	17,478	8,330				
10	90,373	L.F.	Paint Line	54,684	35,689				
11	2,100	L.F.	Painted Wide Line	1,025	1,075				
12	880	S.F.	Painted Crosswalk Line	240	640				
13	13	EACH	Painted Traffic Arrow		13				
14	2	EACH	Painted Railroad Crossing Symbol	2					
15	64	L.F.	Painted Stop Line		64				
16	100	S.Y.	Cement Conc. Sidewalk	20	80				
17	11	EACH	Cement Conc. Curb Ramp Type Perpendicular A		11				
18	9	EACH	Cement Conc. Curb Ramp Type Parallel A	4	5				
19	90	L.F.	Cement Conc. Traffic Curb and Gutter		90				
20	300	L.F.	Cement Conc. Pedestrian Curb and Gutter	140	160				
21	100%	L.S.	Project Temporary Traffic Control	50%	50%				
			OTHER ITEMS						
22	100%	L.S.	SPCC Plan	50%	50%				
23	4	EACH	Ramp Detectable Warning Retrofit		4				
24	100%	L.S.	Trimming and Cleanup	50%	50%				
25	100%	L.S.	Traffic Signal System Induction Loop		100%				
26	-2.00	CALC.	Minor Change	-1.00	-1.00				

NOTE: For Special Features See Special Provisions.

INFORMATIONAL COPY ONLY - NOT FOR BIDDING

GRANT COUNTY PUBLIC WORKS DEPARTMENT
124 ENTERPRISE ST. SE
EPHRATA, WASHINGTON 98823
(509) 754-6082 FAX (509) 754-6087

STRATFORD RD, CRP 14-02
(M. L. City Limits to Tyndall Rd.)
&
PATTON BLVD., CRP 14-03
(SR-17 to Craig St.)
GRIND/INLAY PROJECT

DESIGNED BY:	BOB BERSANTI
CHECKED BY:	TODD MITTGE
APPROVED BY:	JEFF TINCHER
REVISIONS BY:	
DATE REVISED:	08/27/2014
FEDERAL AID NO.:	STPUS-6081(002)

JEFFREY C. TINCHER — STATE OF WASHINGTON — 42338 — REGISTERED PROFESSIONAL ENGINEER — 8/28/14

STRATFORD ROAD NE

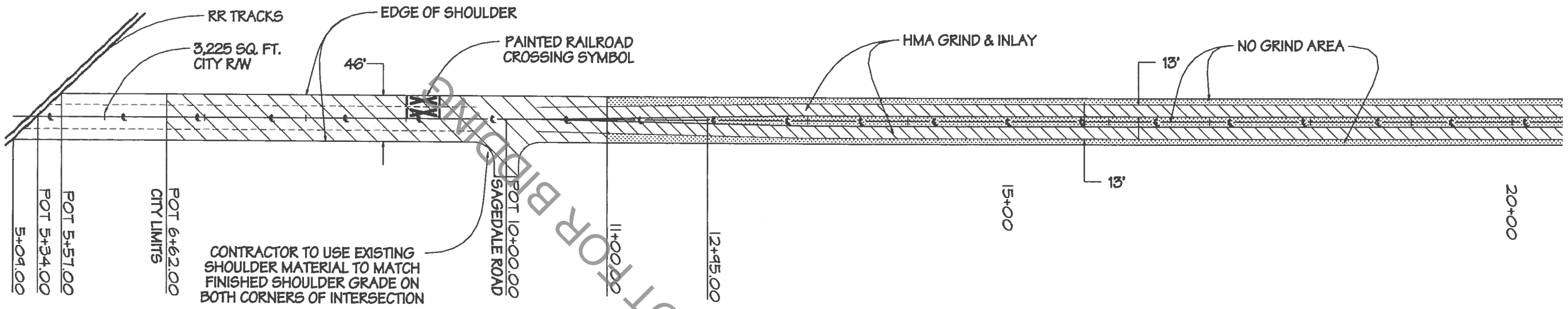

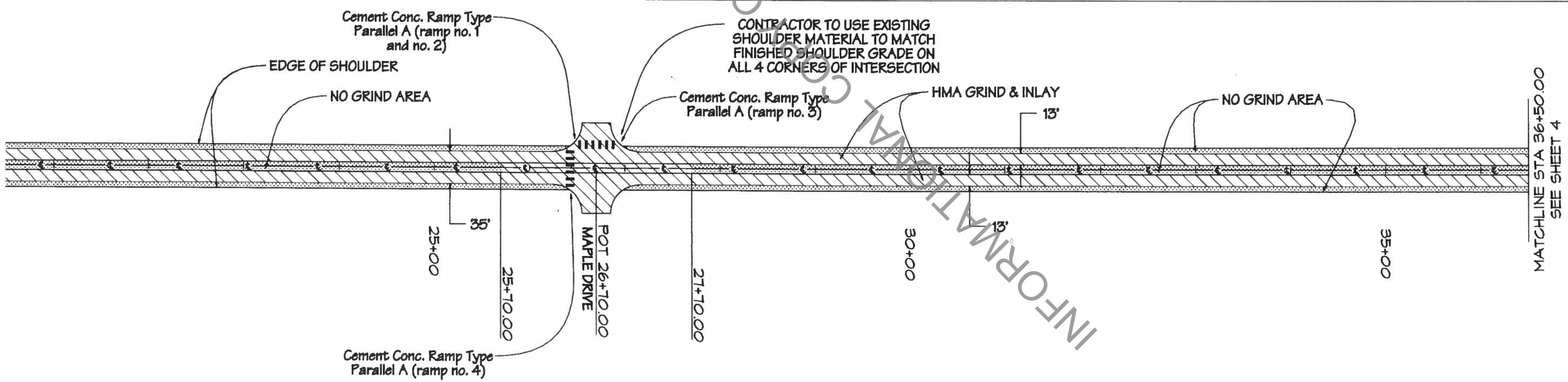

ONLY - NOT FOR BIDDING
INFORMATIONAL COPY

GRANT COUNTY PUBLIC WORKS DEPARTMENT
124 ENTERPRISE ST. SE
EPHRATA, WASHINGTON 98823
(509) 754-6082 FAX (509) 754-6087

STRATFORD RD, CRP 14-02
(M. L. City Limits to Tyndall Rd.)
&
PATTON BLVD., CRP 14-03
(SR-17 to Craig St.)
GRIND/INLAY PROJECT

DESIGNED BY:	BOB BERSANTI
CHECKED BY:	TODD MITTGE
APPROVED BY:	JEFF TINCHER
REVISIONS BY:	
DATE REVISED:	08/27/2014
FEDERAL AID NO.:	STPUS-6081(002)

JEFFREY C. TINCHER — STATE OF WASHINGTON — 42338 — REGISTERED PROFESSIONAL ENGINEER
8/29/14

STRATFORD ROAD NE

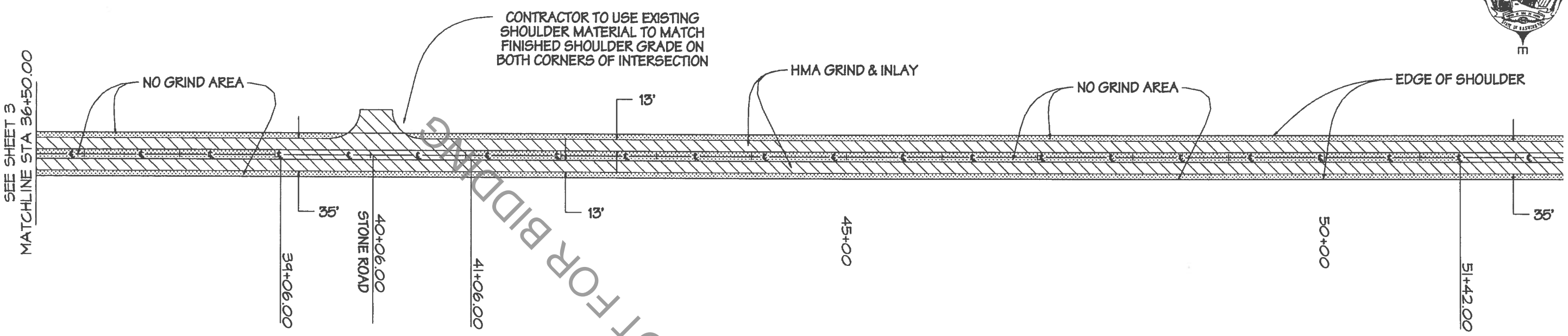

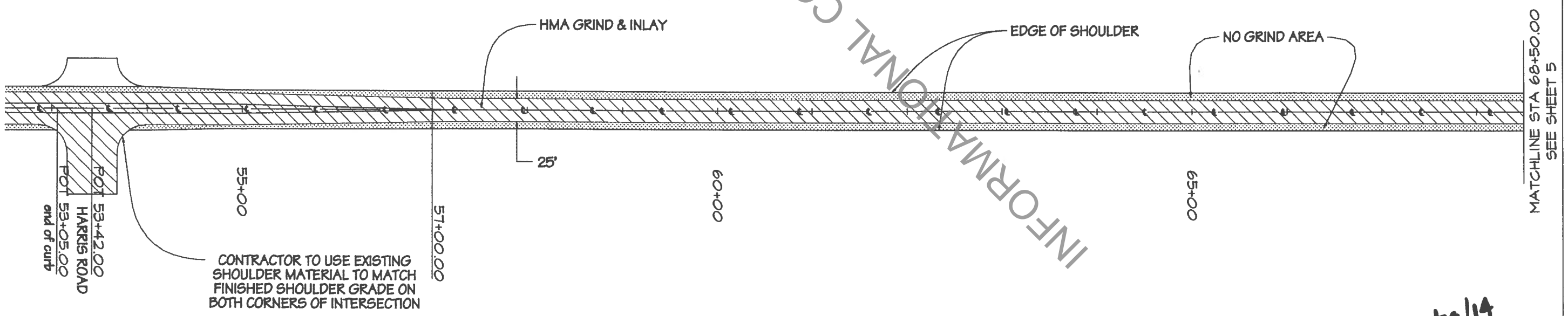

INFORMATIONAL COPY ONLY - NOT FOR BIDDING

GRANT COUNTY PUBLIC WORKS DEPARTMENT
124 ENTERPRISE ST. SE
EPHRATA, WASHINGTON 98823
(509) 754-6082 FAX (509) 754-6087

STRATFORD RD, CRP 14-02
(M. L. City Limits to Tyndall Rd.)
&
PATTON BLVD., CRP 14-03
(SR-17 to Craig St.)
GRIND/INLAY PROJECT

DESIGNED BY:	BOB BERSANTI
CHECKED BY:	TODD MITTGE
APPROVED BY:	JEFF TINCHER
REVISIONS BY:	
DATE REVISED:	08/27/2014
FEDERAL AID NO.:	STPUS-6081(002)

8/28/14

JEFFREY C. TINCHER
STATE OF WASHINGTON
42338
REGISTERED
PROFESSIONAL ENGINEER

STRATFORD ROAD NE

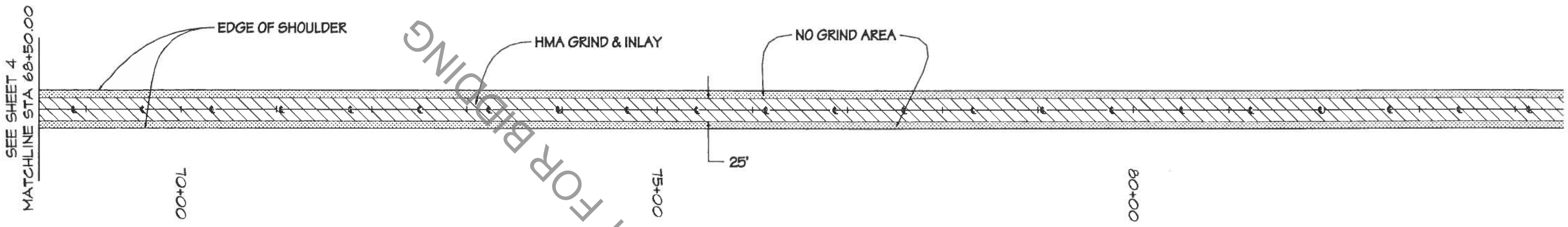

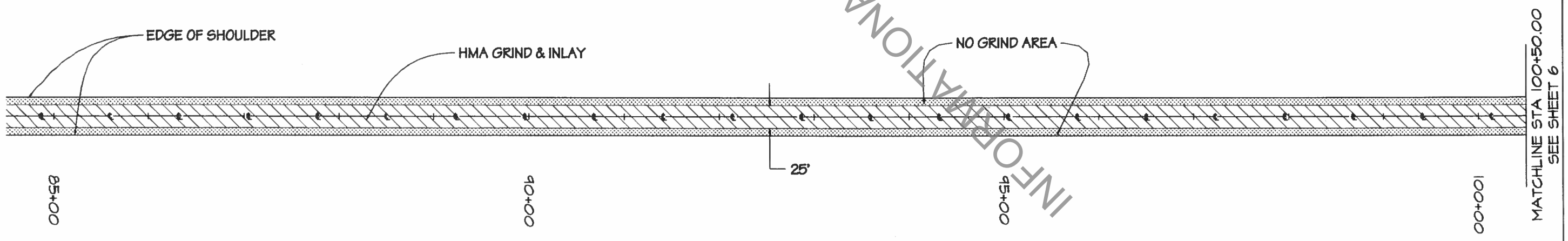

INFORMATIONAL COPY ONLY - NOT FOR BIDDING

GRANT COUNTY PUBLIC WORKS DEPARTMENT
124 ENTERPRISE ST. SE
EPHRATA, WASHINGTON 98823
(509) 754-6082 FAX (509) 754-6087

STRATFORD RD, CRP 14-02
(M. L. City Limits to Tyndall Rd.)
&
PATTON BLVD., CRP 14-03
(SR-17 to Craig St.)
GRIND/INLAY PROJECT

DESIGNED BY:	BOB BERSANTI
CHECKED BY:	TODD MITTGE
APPROVED BY:	JEFF TINCHER
REVISIONS BY:	
DATE REVISED:	08/27/2014
FEDERAL AID NO.:	STPUS-6081(002)

JEFFREY C. TINCHER — STATE OF WASHINGTON — 42338 — REGISTERED PROFESSIONAL ENGINEER
8/22/14

STRATFORD ROAD NE

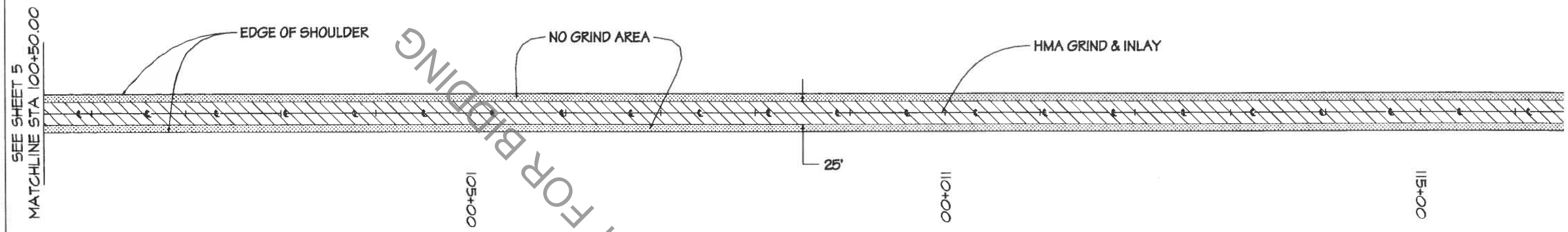

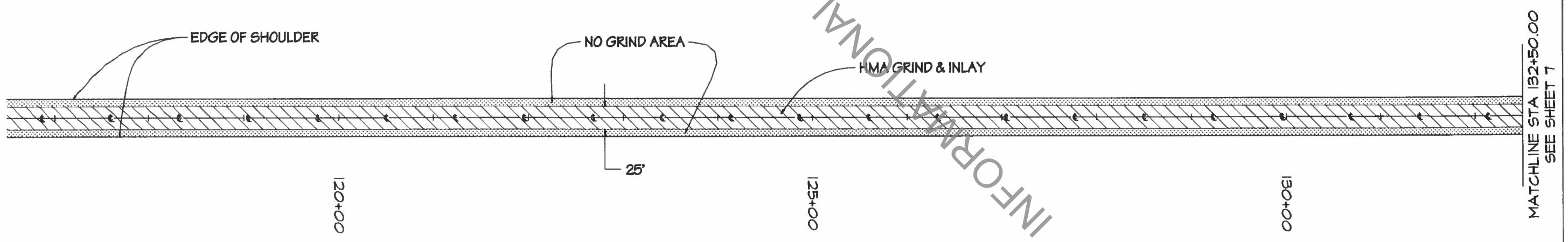

INFORMATIONAL COPY ONLY - NOT FOR BIDDING

GRANT COUNTY PUBLIC WORKS DEPARTMENT
124 ENTERPRISE ST. SE
EPHRATA, WASHINGTON 98823
(509) 754-6082 FAX (509) 754-6087

STRATFORD RD, CRP 14-02
(M. L. City Limits to Tyndall Rd.)
&
PATTON BLVD., CRP 14-03
(SR-17 to Craig St.)
GRIND/INLAY PROJECT

DESIGNED BY:	BOB BERSANTI
CHECKED BY:	TODD MITTGE
APPROVED BY:	JEFF TINCHER
REVISIONS BY:	
DATE REVISED:	08/27/2014
FEDERAL AID NO.:	STPUS-6081(002)

JEFFREY C. TINCHER — STATE OF WASHINGTON — 42338 — REGISTERED PROFESSIONAL ENGINEER — 8/29/14

SHEET 6 OF 13

STRATFORD ROAD NE

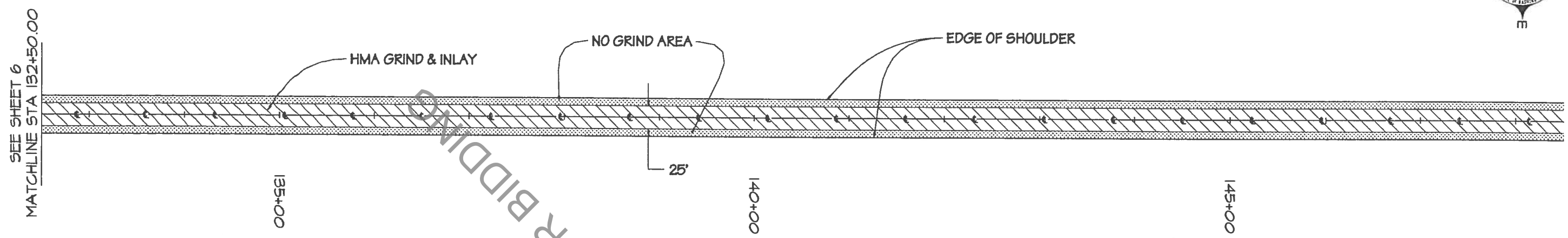

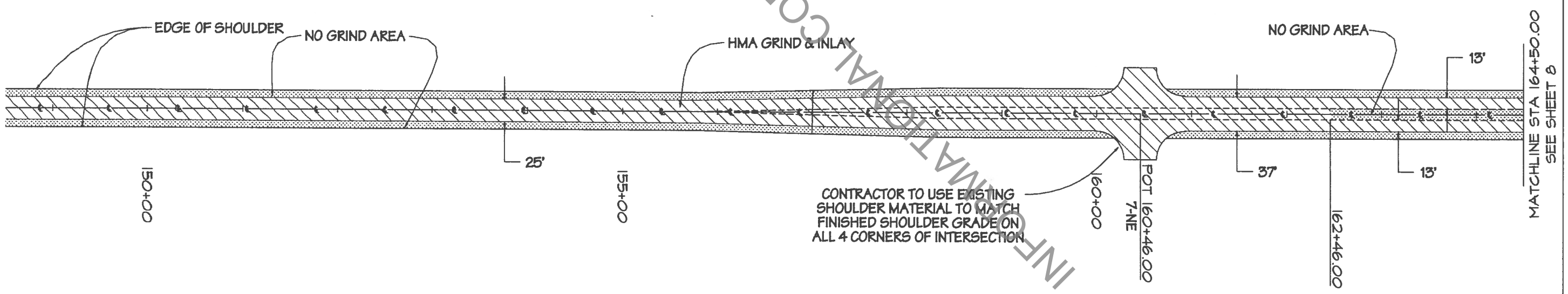

INFORMATIONAL COPY ONLY - NOT FOR BIDDING

GRANT COUNTY PUBLIC WORKS DEPARTMENT
124 ENTERPRISE ST. SE
EPHRATA, WASHINGTON 98823
(509) 754-6082 FAX (509) 754-6087

STRATFORD RD, CRP 14-02
(M. L. City Limits to Tyndall Rd.)
&
PATTON BLVD., CRP 14-03
(SR-17 to Craig St.)
GRIND/INLAY PROJECT

DESIGNED BY:	BOB BERSANTI
CHECKED BY:	TODD MITTGE
APPROVED BY:	JEFF TINCHER
REVISIONS BY:	
DATE REVISED:	08/27/2014
FEDERAL AID NO.:	STPUS-6081(002)

JEFFREY C. TINCHER — STATE OF WASHINGTON — 42338 — REGISTERED PROFESSIONAL ENGINEER
8/29/14

STRATFORD ROAD NE

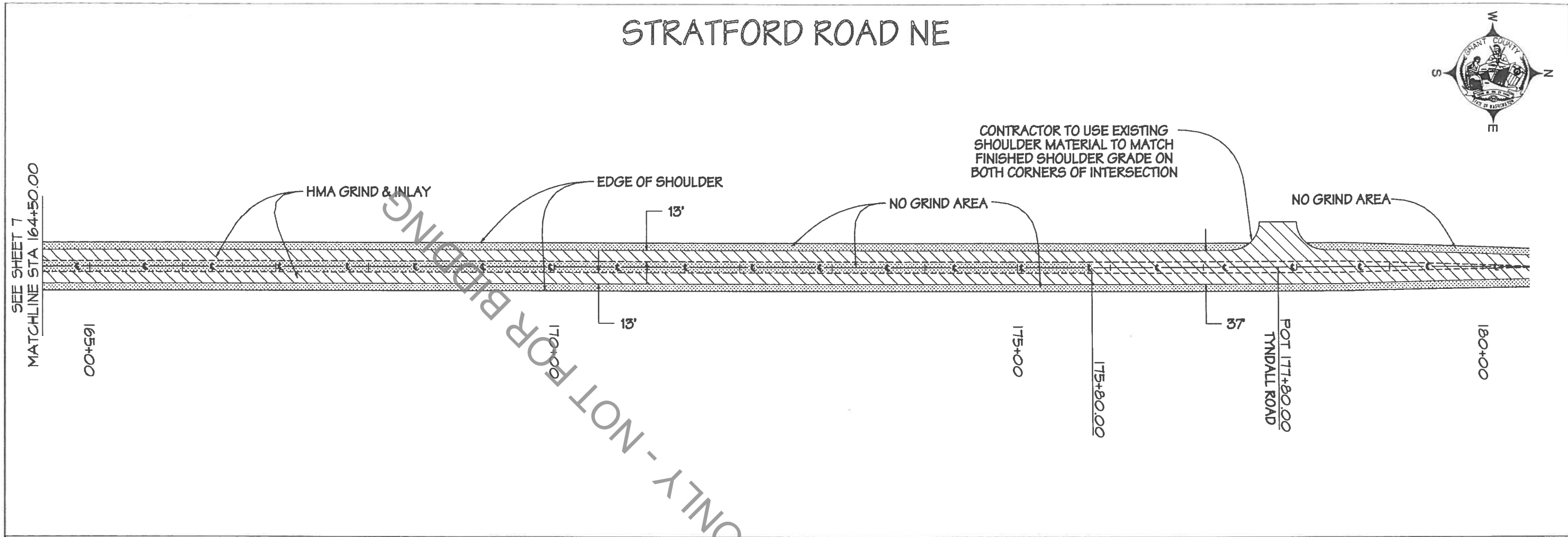

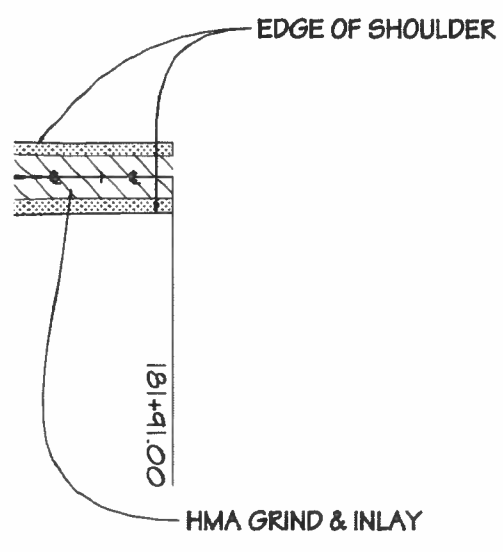

INFORMATIONAL COPY ONLY - NOT FOR BIDDING

GRANT COUNTY PUBLIC WORKS DEPARTMENT
124 ENTERPRISE ST. SE
EPHRATA, WASHINGTON 98823
(509) 754-6082 FAX (509) 754-6087

STRATFORD RD, CRP 14-02
(M. L. City Limits to Tyndall Rd.)
&
PATTON BLVD., CRP 14-03
(SR-17 to Craig St.)
GRIND/INLAY PROJECT

DESIGNED BY:	BOB BERSANTI
CHECKED BY:	TODD MITTGE
APPROVED BY:	JEFF TINCHER
REVISIONS BY:	
DATE REVISED:	08/27/2014
FEDERAL AID NO.:	STPUS-6081(002)

JEFFREY C. TINCHER
STATE OF WASHINGTON
42338
REGISTERED
PROFESSIONAL ENGINEER
8/28/14

PATTON BLVD.

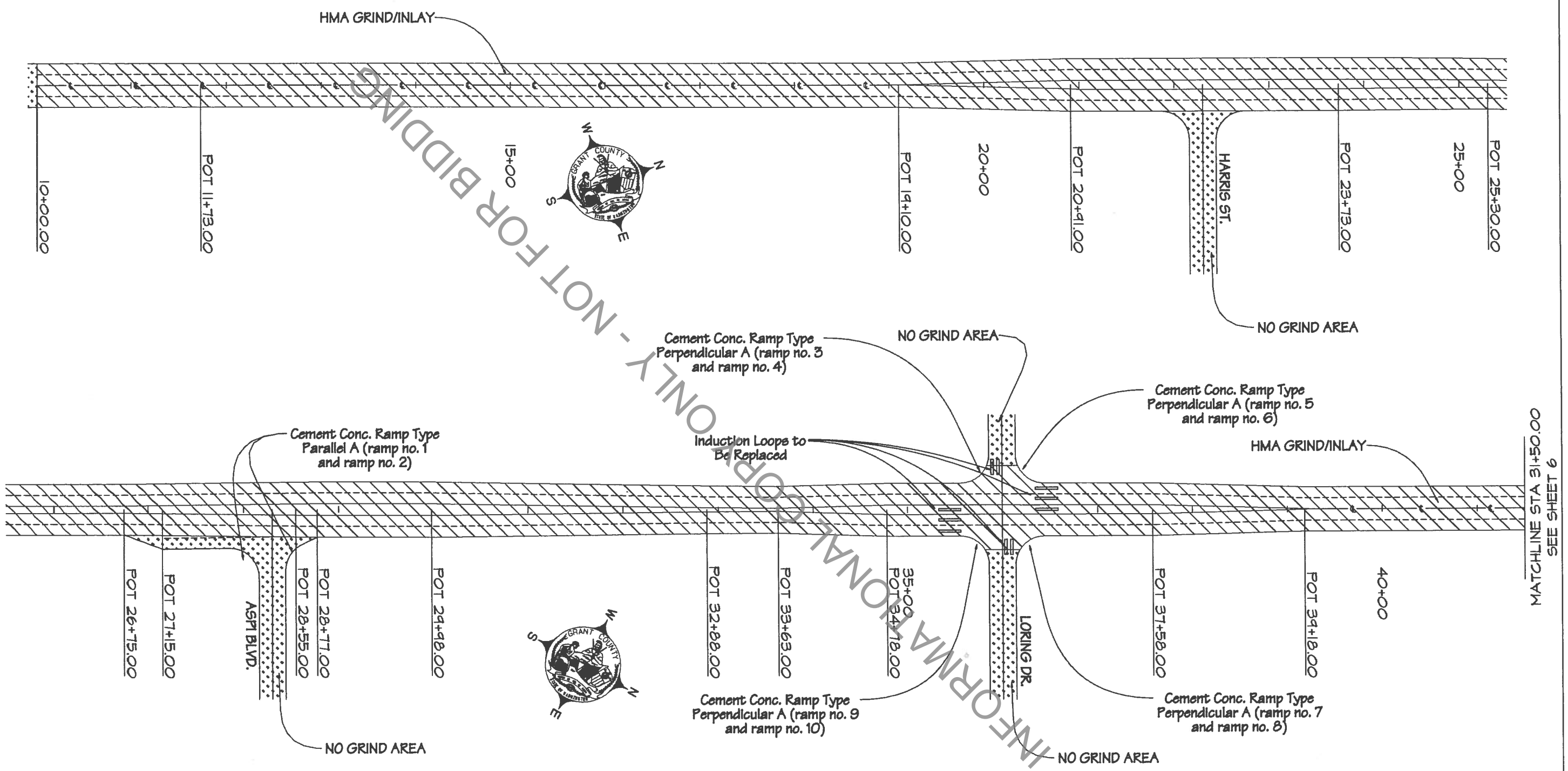

INFORMATIONAL COPY ONLY - NOT FOR BIDDING

GRANT COUNTY PUBLIC WORKS DEPARTMENT
124 ENTERPRISE ST. SE
EPHRATA, WASHINGTON 98823
(509) 754-6082 FAX (509) 754-6087

STRATFORD RD, CRP 14-02
(M. L. City Limits to Tyndall Rd.)
&
PATTON BLVD., CRP 14-03
(SR-17 to Craig St.)
GRIND/INLAY PROJECT

DESIGNED BY:	BOB BERSANTI
CHECKED BY:	TODD MITTGE
APPROVED BY:	JEFF TINCHER
REVISIONS BY:	
DATE REVISED:	08/27/2014
FEDERAL AID NO.:	STPUS-STPR-Z913(002)

JEFFREY C. TINCHER — STATE OF WASHINGTON — 42338 — REGISTERED PROFESSIONAL ENGINEER — 8/27/14

PATTON BLVD.

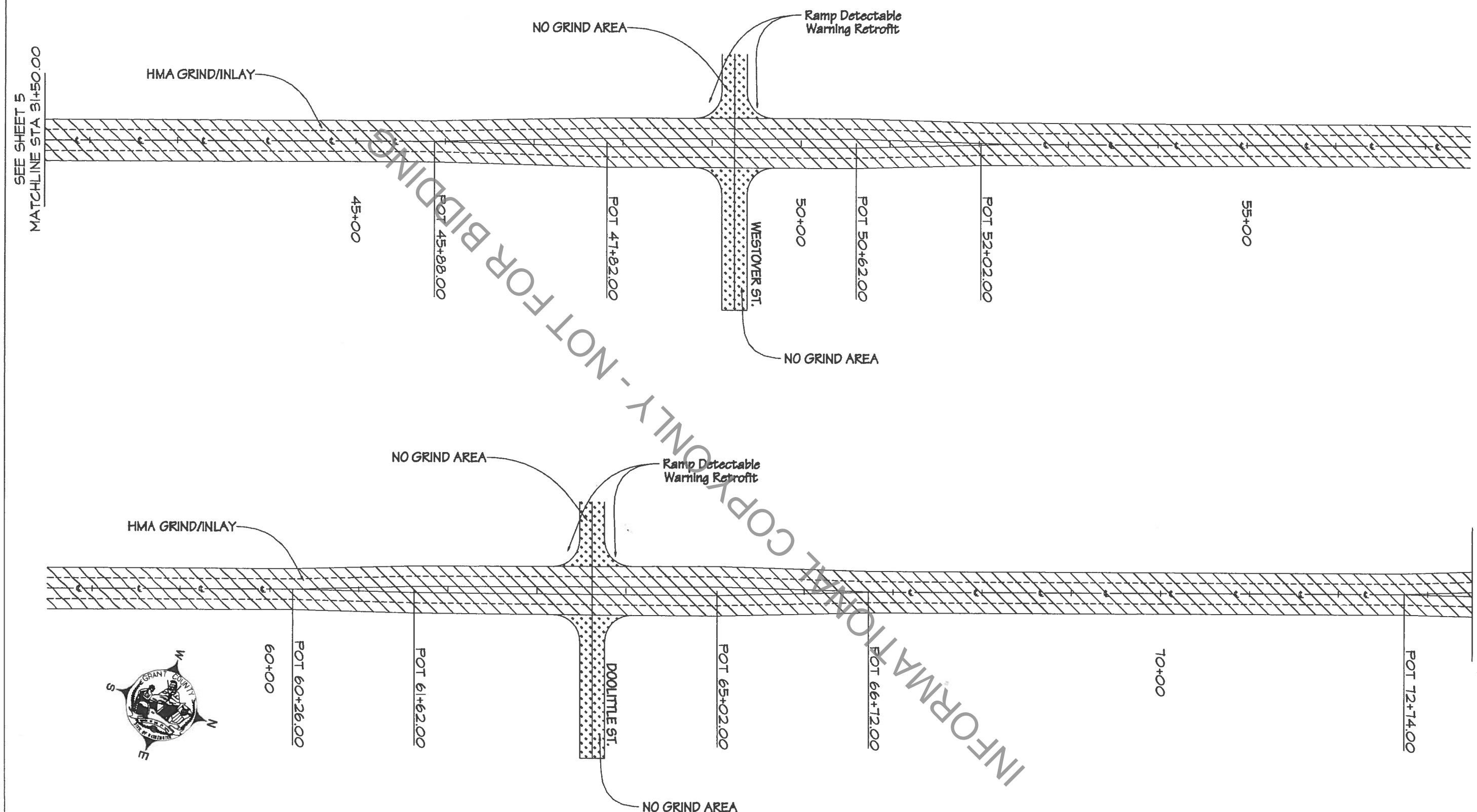

INFORMATIONAL COPY ONLY - NOT FOR BIDDING

GRANT COUNTY PUBLIC WORKS DEPARTMENT
124 ENTERPRISE ST. SE
EPHRATA, WASHINGTON 98823
(509) 754-6082 FAX (509) 754-6087

STRATFORD RD, CRP 14-02
(M. L. City Limits to Tyndall Rd.)
&
PATTON BLVD., CRP 14-03
(SR-17 to Craig St.)
GRIND/INLAY PROJECT

DESIGNED BY:	BOB BERSANTI
CHECKED BY:	TODD MITTGE
APPROVED BY:	JEFF TINCHER
REVISIONS BY:	
DATE REVISED:	08/27/2014
FEDERAL AID NO.:	STPUS-STPR-Z913(002)

JEFFREY C. TINCHER — STATE OF WASHINGTON — 42338 — REGISTERED PROFESSIONAL ENGINEER — 8/28/14

PATTON BLVD.

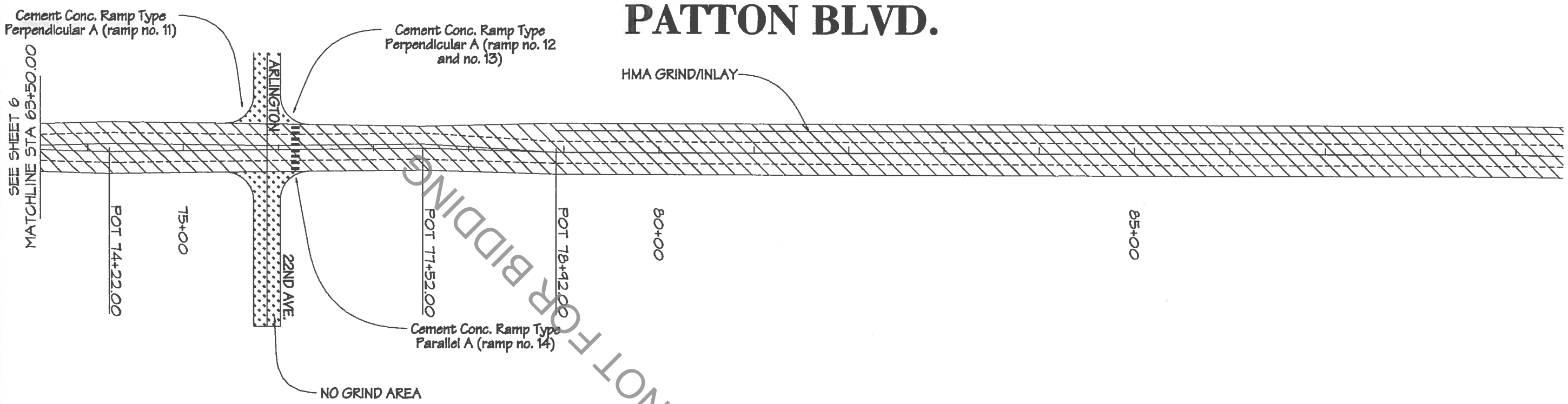

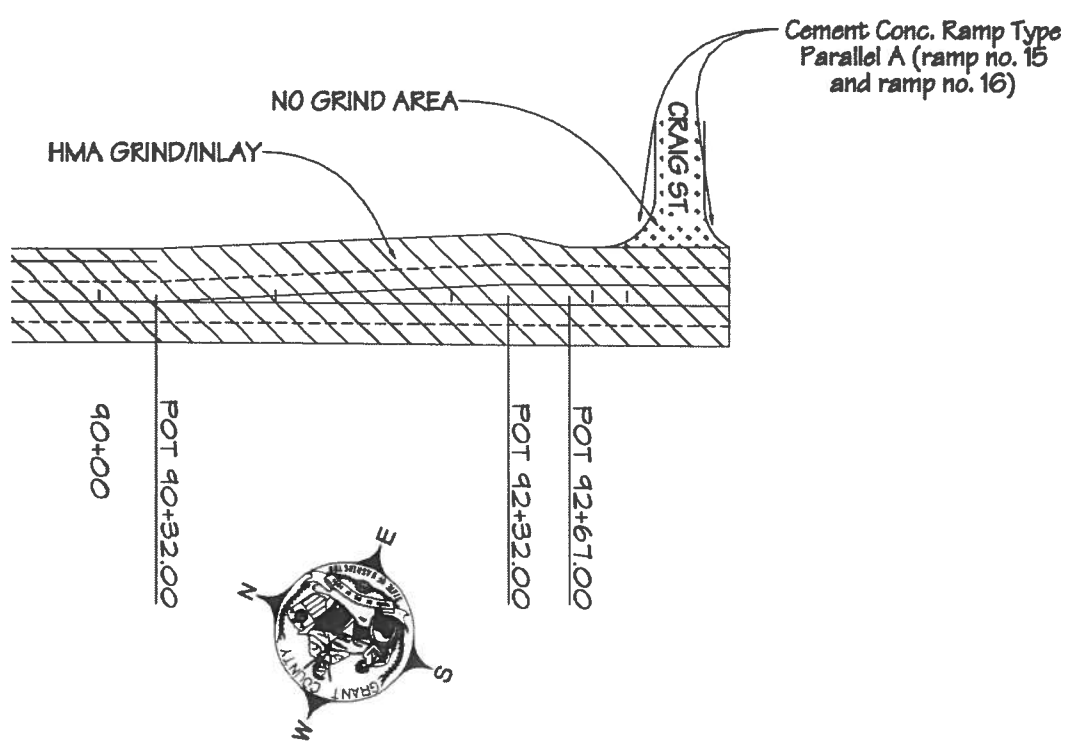

MATCHLINE STA 95+50.00
SEE SHEET 8

INFORMATIONAL COPY ONLY - NOT FOR BIDDING

GRANT COUNTY PUBLIC WORKS DEPARTMENT
124 ENTERPRISE ST. SE
EPHRATA, WASHINGTON 98823
(509) 754-6082 FAX (509) 754-6087

STRATFORD RD, CRP 14-02
(M. L. City Limits to Tyndall Rd.)
&
PATTON BLVD., CRP 14-03
(SR-17 to Craig St.)
GRIND/INLAY PROJECT

DESIGNED BY:	BOB BERSANTI
CHECKED BY:	TODD MITTGE
APPROVED BY:	JEFF TINCHER
REVISIONS BY:	
DATE REVISED:	08/27/2014
FEDERAL AID NO.:	STPUS-STPR-Z913(002)

JEFFREY C. TINCHER, STATE OF WASHINGTON, 42338, REGISTERED PROFESSIONAL ENGINEER
8/20/14

STRATFORD RD. TYPICAL X-SECTIONS

TYPICAL CURB ROADWAY SECTION "A"

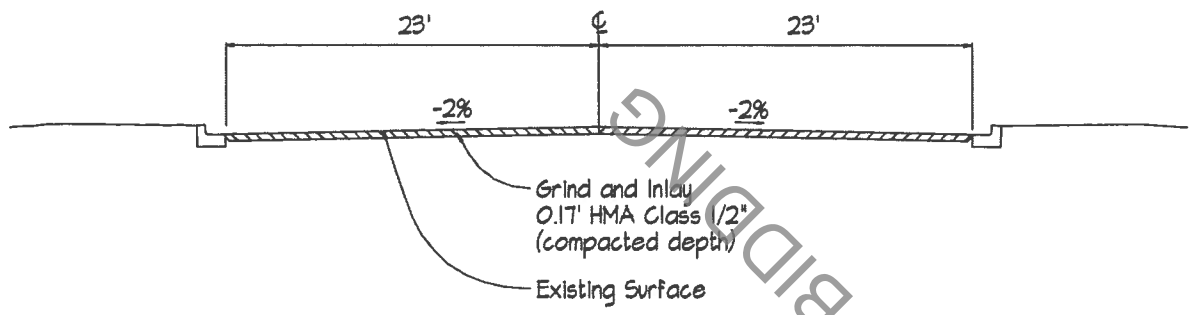

STATION 6+62 TO STATION 9+70
GRIND SAGEDALE INTERSECTION
TRANSITION SECTION "A" STATION 10+30 TO SECTION "B" STATION 12+95

TYPICAL CURB ROADWAY SECTION "B"

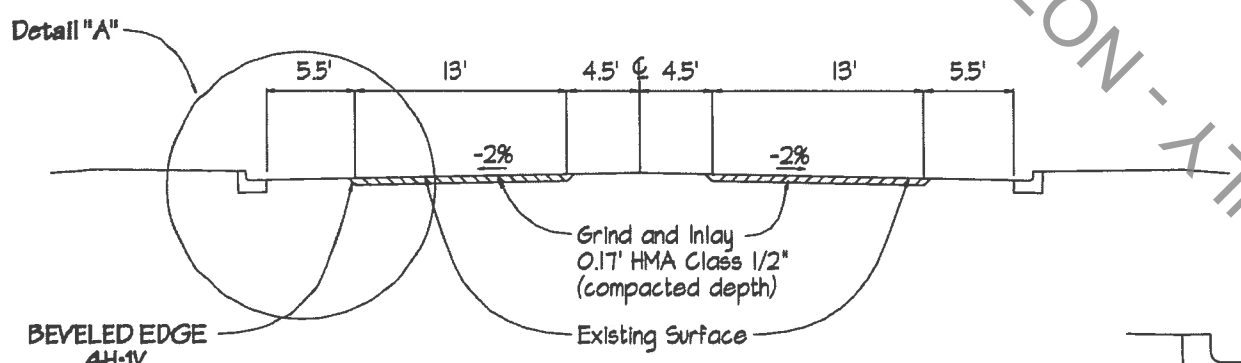

STATION 12+95 TO STATION 25+70
GRIND MAPLE DRIVE INTERSECTION
STATION 27+70 TO STATION 39+06
GRIND STONE ROAD INTERSECTION
STATION 41+06 TO SECTION "C" STATION 51+42

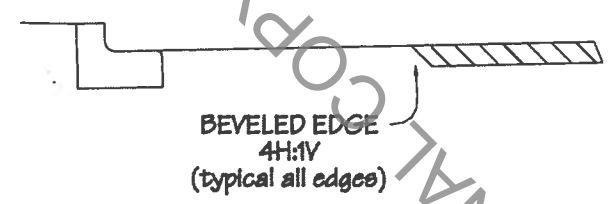

DETAIL "A"

TYPICAL CURB ROADWAY SECTION "C"

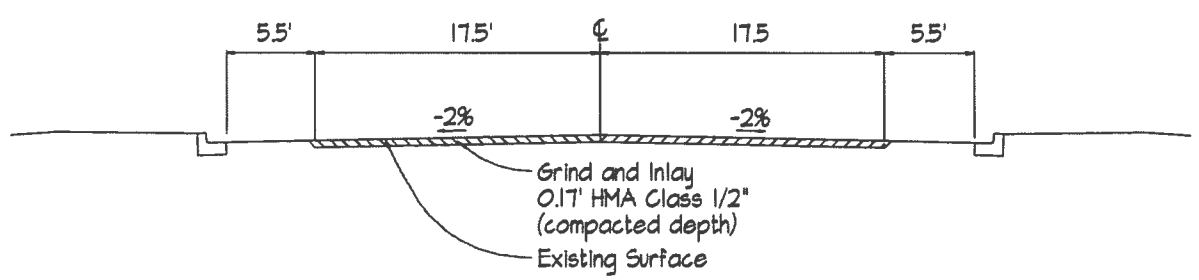

STATION 51+42 TO STATION 53+05
GRIND HARRIS ROAD INTERSECTION (East Approach Only)
TRANSITION SECTION "C" STATION 54+00 TO SECTION "D" STATION 57+22

TYPICAL ROADWAY SECTION "D"

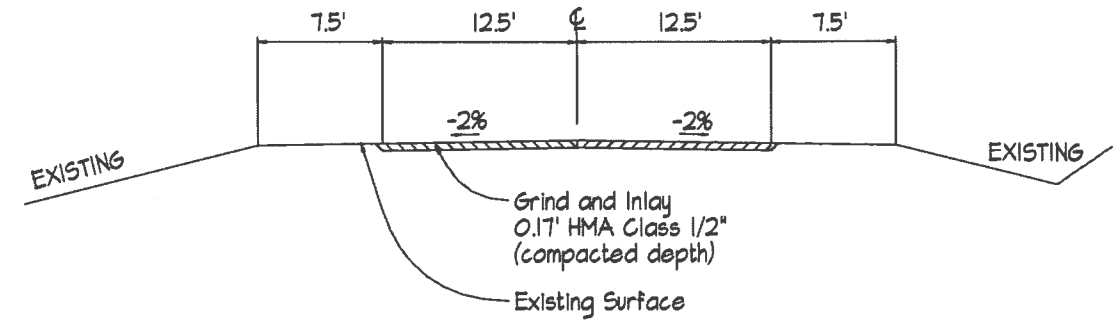

STATION 57+22 TO STATION 155+80
TRANSITION SECTION "D" STATION 155+80 TO SECTION "E" STATION 158+35
STATION 180+80 TO EXISTING ROADWAY STATION 181+40

TYPICAL ROADWAY SECTION "E"

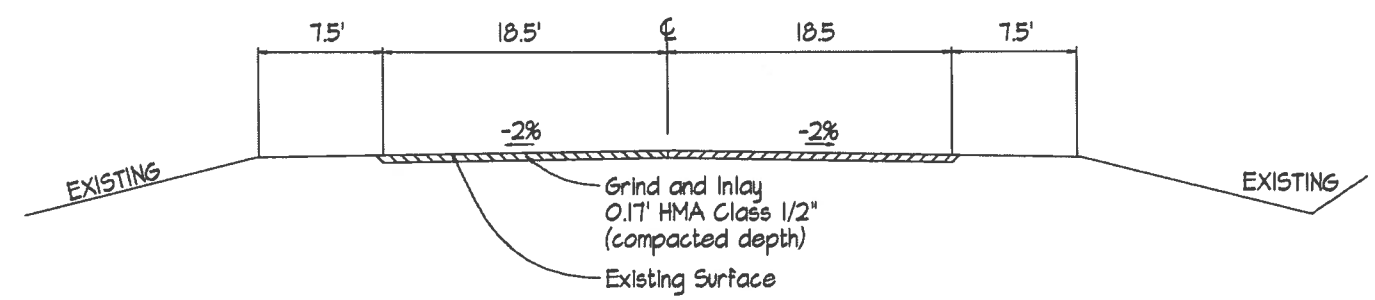

STATION 158+35 TO STATION 160+00
GRIND 7-NE INTERSECTION
STATION 161+00 TO SECTION "F" STATION 162+46
STATION 175+80 TO STATION 177+50
GRIND TYNDALL ROAD INTERSECTION
TRANSITION SECTION "E" STATION 178+50 SECTION "D" STATION 180+80

TYPICAL ROADWAY SECTION "F"

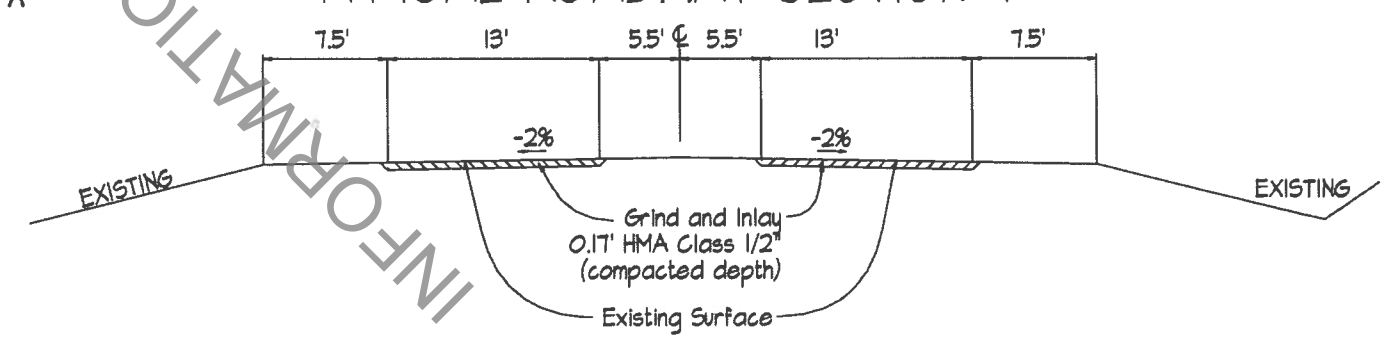

STATION 162+46 TO STATION SECTION "E" 175+80
TRANSITION ROADWAY SECTION "C: STATION 175+80
TO ROADWAY SECTION "A" STATION 181+40

INFORMATIONAL COPY ONLY - NOT FOR BIDDING

GRANT COUNTY PUBLIC WORKS DEPARTMENT
124 ENTERPRISE ST. SE
EPHRATA, WASHINGTON 98823
(509) 754-6082 FAX (509) 754-6087

STRATFORD RD, CRP 14-02
(M. L. City Limits to Tyndall Rd.)
&
PATTON BLVD., CRP 14-03
(SR-17 to Craig St.)
GRIND/INLAY PROJECT

DESIGNED BY:	BOB BERSANTI
CHECKED BY:	TODD MITTGE
APPROVED BY:	JEFF TINCHER
REVISIONS BY:	
DATE REVISED:	08/27/2014
FEDERAL AID NO.:	STPUS-6081(002)

JEFFREY C. TINCHER
STATE OF WASHINGTON
42338
REGISTERED
PROFESSIONAL ENGINEER
8/28/14

PATTON BLVD. TYPICAL X-SECTION

TYPICAL CURB ROADWAY SECTION

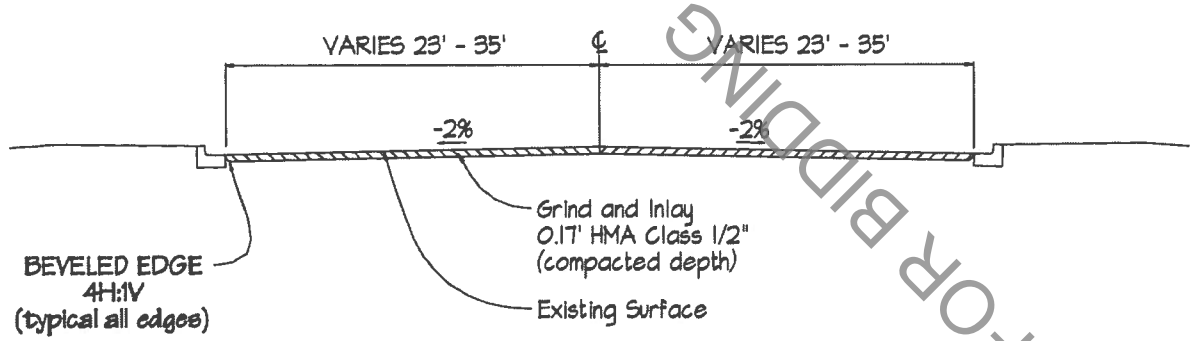

SR-17 TO CRAIG ST.

TYPICAL APPROACH

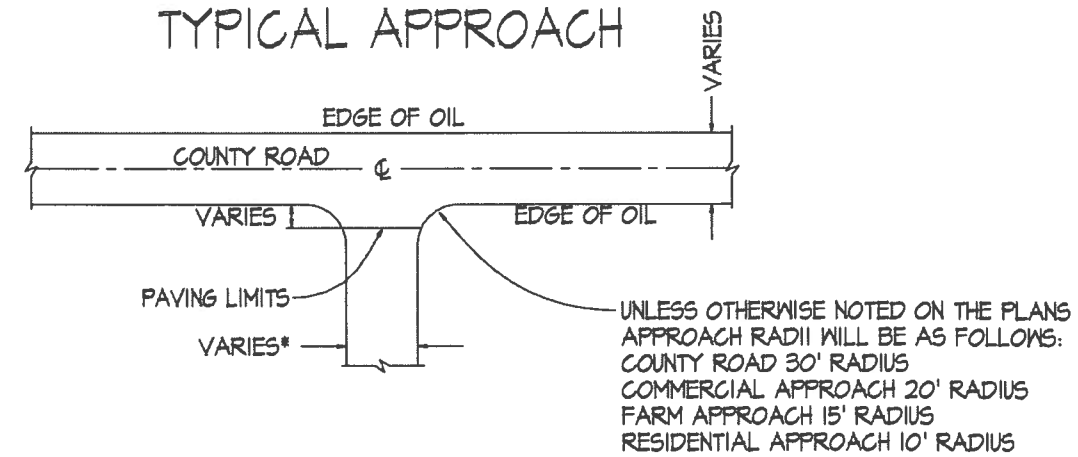

PLANING BITUMINOUS PAVEMENT DETAIL

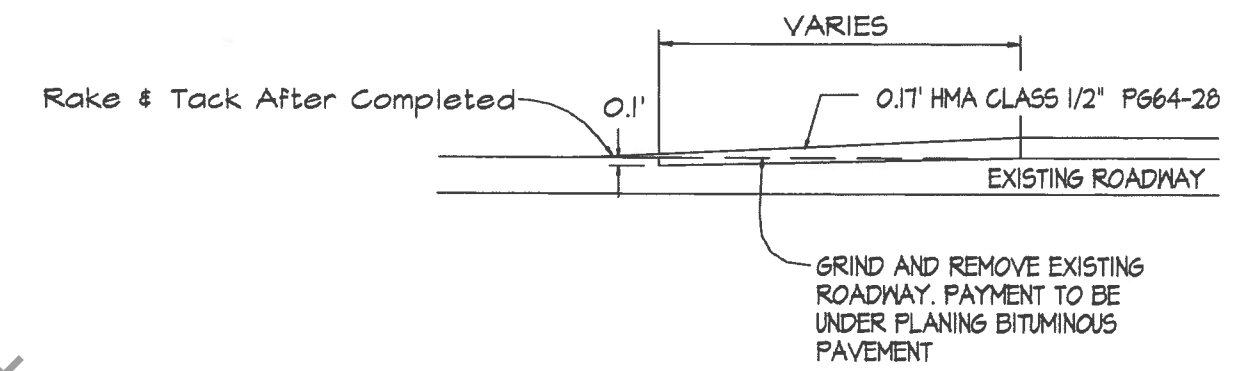

PLANING HMA DETAIL

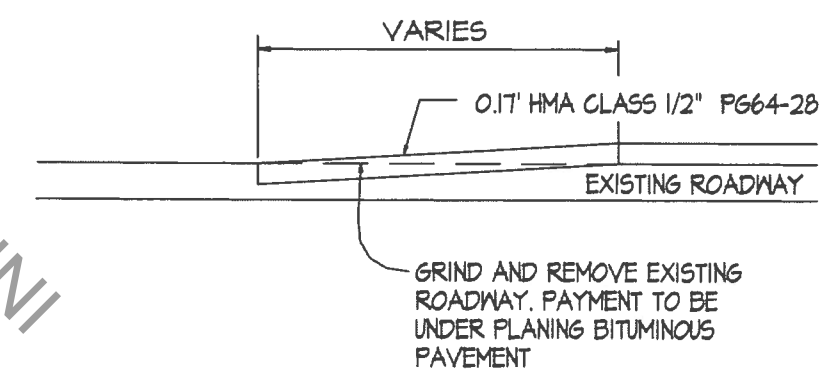

INFORMATIONAL COPY ONLY - NOT FOR BIDDING

GRANT COUNTY PUBLIC WORKS DEPARTMENT
124 ENTERPRISE ST. SE
EPHRATA, WASHINGTON 98823
(509) 754-6082 FAX (509) 754-6087

STRATFORD RD, CRP 14-02
(M. L. City Limits to Tyndall Rd.)
&
PATTON BLVD., CRP 14-03
(SR-17 to Craig St.)
GRIND/INLAY PROJECT

DESIGNED BY:	BOB BERSANTI
CHECKED BY:	TODD MITTGE
APPROVED BY:	JEFF TINCHER
REVISIONS BY:	
DATE REVISED:	08/27/2014
FEDERAL AID NO.:	STPUS-6081(002)

JEFFREY C. TINCHER — STATE OF WASHINGTON — 42338 — REGISTERED PROFESSIONAL ENGINEER — 8/27/14