GRANT COUNTY
PUBLIC WORKS DEPARTMENT

Derek Pohle, P.E.
Director of Public Works and
County Road Engineer
Ephrata (509) 754-6082

David Heilman
Assistant Director of Public Works
Ephrata (509) 754-6082

Todd Mattson, P.E.
Assistant County Road Engineer
Ephrata (509) 754-6082

Robert Bersanti
Design/Construction Engineer
Ephrata (509) 754-6082

Steve Hill
Supervisor
Road District #1
Ephrata (509) 754-6586

Dennis Collier, Supervisor
Road District #2
Moses Lake (509) 765-4172

John Brissey, Supervisor
Road District #3
Quincy (509) 787-2321

Jerome Wawers, Supervisor
Bridges
Ephrata (509) 754-6082

Janice Goeden, Supervisor
Solid Waste
Ephrata (509) 754-4319

CONTRACT PROVISIONS and PLANS

For Construction of:

NEVA LAKE Road
CRP 10-06

Sealed Bids will be Opened on
August 28, 2012
at
1:30 P.M.
at the Office of the
Board of County Commissioners
Grant County Courthouse
P.O. Box 37
35 C Street NW, Room 207
Ephrata, Washington 98823

INFORMATIONAL COPY ONLY

NOTICE TO CONTRACTORS

Sealed bids, plainly marked **"BID FOR NEVA LAKE Road, CRP 10-06"**, will be received by Grant County at the Office of the Board of County Commissioners located in the County Courthouse, P.O. Box 37, 35 C Street NW – Room 207, Ephrata, WA, 98823, until **1:30 P.M., Tuesday, August 28, 2012** and will then and there be opened and publicly read for the construction of the improvements.

All bid proposals shall be accompanied by a bid proposal deposit in cash, certified check, cashier's check, or surety bond in an amount equal to five percent (5%) of the amount of such bid proposal. No conditional bid bond will be accepted. Should the successful bidder fail to enter into such contract and furnish a satisfactory performance bond within the time stated in the specifications, the bid proposal deposit shall be forfeited to Grant County.

Maps, plans and specifications may be purchased from the office of the County Engineer, 124 Enterprise St. S.E., Ephrata, WA 98823, upon payment of the amount of $25.00 (non-refundable).

Informational copies of the maps, plans and specifications are on file for inspection at the Grant County Public Works Building, 124 Enterprise St. S.E., Ephrata, WA 98823, and in various plan centers located in Washington.

The Board of County Commissioners of Grant County, Washington, reserves the right to reject any and all bids. The award of this contract, if made, will be to the lowest responsible bidder.

The improvement for which bids will be received is as follows:

NEVA LAKE Road – CRP 10-06
This contract provides for the construction of 0.50 miles of a county road in Grant County, WA, and includes roadway excavation, embankment compaction, crushed surfacing base course, maintenance rock, drainage items, hot mix asphalt, monuments, seeding, fertilizing, mulching and other work all in accordance with the attached Contract Plans, these Contract Provisions and the Standard Specifications.

INFORMATIONAL COPY ONLY

BIDDER'S CHECK LIST

The bidder's attention is especially called to the following forms which must be executed in full as required:

(A) PROPOSAL

The unit prices bid must be shown in the spaces provided. Show unit prices in figures only. All extensions of the unit prices must be shown in the spaces provided.

(B) PROPOSAL SIGNATURE SHEET

To be filled in and signed by the bidder.

(C) STATEMENT OF CONTRACTOR QUALIFICATIONS

To be filled in and signed by the bidder.

(D) BID BOND

This form is to be executed by the bidder and his surety company unless the bid is accompanied by cash, certified or cashier's check. The amount of this bond shall be equal to 5% of the total amount bid and may be shown in dollars or on a percentage basis.

(E) Non-Collusion Declaration (272-035)

The following forms are to be executed after the contract is awarded:

(F) CONTRACT

This agreement is to be executed by the successful bidder, his surety company, and Grant County.

(G) CONTRACT BOND

To be executed by the successful bidder and his surety company.

INFORMATIONAL COPY ONLY

TABLE OF CONTENTS

AMENDMENTS TO THE STANDARD SPECIFICATIONS 1

Section 1-01, Definition and Terms January 2, 2012 1

Section 1-02, Bid Procedures and Conditions January 2, 2012 1

Section 1-03, Award and Execution of Contract April 2, 2012 1

Section 1-08, Prosecution and Progress April 2, 2012 2

Section 1-09, Measurement and Payment April 2, 2012 2

Section 8-01, Erosion Control and Water Pollution Control April 2, 2012 2

Section 9-14, Erosion Control and Roadside Planting April 2, 2012 4

SPECIAL PROVISIONS 9

INTRODUCTION 9

DIVISION 1 GENERAL REQUIREMENTS 9

DEFINITIONS AND TERMS 9

1-01.3 Definitions 9

DESCRIPTION OF WORK 10

This contract provides for the construction of 0.50 miles of a county road in Grant County, WA, and includes roadway excavation, embankment compaction, crushed surfacing base course, maintenance rock, drainage items, hot mix asphalt, monuments, seeding, fertilizing, mulching and other work all in accordance with the attached Contract Plans, these Contract Provisions and the Standard Specifications. 10

BID PROCEDURES AND CONDITIONS 10

1-02.1 Prequalification of Bidders 10

Public Opening Of Proposal 11

1-02.13 Irregular Proposals 12

REVISE ITEM 1 TO READ: 12

1-02.14 Disqualification of Bidders 12

INFORMATIONAL COPY ONLY

CONTROL OF WORK 13
1-05.13 Superintendents, Labor and Equipment of Contractor 13
Cooperation With Other Contractors 14

LEGAL RELATIONS AND RESPONSIBILITIES TO THE PUBLIC 14
State Taxes 14
Permits and Licenses 14
Load Limits 14
Contractor's Responsibility for Work 14
Repair of Damage 14
Spill, Prevention, Control, and Coutermeasures Plan 15
Utilities And Similar Facilities 16
Public Liability and Property Damage Insurance 17
Construction Under Traffic 17
Work Zone Clear Zone 18
PROSECUTION AND PROGRESS 18
Subcontracting 18
Prosecution Of Work 19
MEASUREMENT AND PAYMENT 20
Payments 20

DIVISION 2 EARTHWORK 20

CLEARING, GRUBBING, AND ROADSIDE CLEANUP 20
Description 20

ROADWAY EXCAVATION AND EMBANKMENT 20
Payment 21
Construction Requirements 21
Disposal Of Surplus Material 21

DIVISION 3 PRODUCTION FROM QUARRY AND PIT SITES AND STOCKPILING 22

PRODUCTION FROM QUARRY AND PIT SITES 22
State Furnished Material Sources 22

STOCKPILING AGGREGATES 22
General Requirements 22
Removing Aggregates From Stockpiles 22
Payment 22

SITE RECLAMATION 23
Contracting-Agency Provided Sites 23

DIVISION 4 BASES 23

BALLAST AND CRUSHED SURFACING 23

INFORMATIONAL COPY ONLY

Construction Requirements 23
Equipment 23
Placing and Spreading 23
Miscellaneous Requirement 23

DIVISION 5 SURFACE TREATMENTS AND PAVEMENTS 24

HOT MIX ASPHALT 24
5-04.3(7)A Mix Design 24
5-04.3(8)A1, General 25
5-04.3(8)A5, Test Results 25
5-04.3(8)A7, Test Section – HMA Mixtures 26
5-04.5(1)A Price Adjustments for Quality of HMA Mixture 26
5-04.5(1)B Price Adjustments for Quality of HMA Compaction 27

DIVISION 8 MISCELLANEOUS CONSTRUCTION 27

EROSION CONTROL AND WATER POLLUTION CONTROL 27
Construction Requirements 27
Mulching 27

MONUMENT 28
Construction Requirements 28

DIVISION 9 MATERIALS 28

AGGREGATES 28
Aggregates for Ballast and Crushed Surfacing 28
Crushed Surfacing & Maintenance Rock 28

STANDARD PLANS 30

Proposal ..... Proposal Page 1 - 8

Contract ..... Contract Page 1 - 3

Appendices

Title VI – Contractor Requirements
Wage Rates – State
Standard Plans
Plans
Test Pit Logs
Geologic Log and As-Built For Well MW-42-B
Geologic Log and As-Built For Well MW-43-P2
Figure 1 North End of Landfill Soil Thickness Drawing
Soil Boring and Test pit Analytical Results

INFORMATIONAL COPY ONLY

INFORMATIONAL COPY ONLY

INTRODUCTION

The following Amendments and Special Provisions shall be used in conjunction with the 2012 Standard Specifications for Road, Bridge, and Municipal Construction.

AMENDMENTS TO THE STANDARD SPECIFICATIONS

The following Amendments to the Standard Specifications are made a part of this contract and supersede any conflicting provisions of the Standard Specifications. For informational purposes, the date following each Amendment title indicates the implementation date of the Amendment or the latest date of revision.

Each Amendment contains all current revisions to the applicable section of the Standard Specifications and may include references which do not apply to this particular project.

Section 1-01 Definition and Terms

January 2, 2012

1-01.3 Definitions

The definition for **"Bid Documents"** is revised to read:

> The component parts of the proposed Contract which may include, but are not limited to, the Proposal Form, the proposed Contract Provisions, the proposed Contract Plans, Addenda, and, for projects with Contracting Agency subsurface investigations, the Summary of Geotechnical Conditions and subsurface boring logs (if any).

Section 1-02, Bid Procedures and Conditions

January 2, 2012

1-02.4(2) Subsurface Information

The first two sentences in the first paragraph are revised to read:

> If the Contracting Agency has made subsurface investigation of the site of the proposed work, the boring log data, soil sample test data, and geotechnical recommendations reports obtained by the Contracting Agency will be made available for inspection by the Bidders at the location specified in the Special Provisions. The Summary of Geotechnical Conditions, as an appendix to the Special Provisions, and the boring logs shall be considered as part of the Contract.

Section 1-03, Award and Execution of Contract

April 2, 2012

1-03.1(1) Tied Bids

This section's title is revised to read:

> **1-03.1(1) Identical Bid Totals**

INFORMATIONAL COPY ONLY

Section 1-08, Prosecution and Progress

April 2, 2012

1-08.1 Subcontracting

In the eighth paragraph, "Contracting Agency" is revised to read "WSDOT".

1-08.3(1) General Requirements

The following new paragraph is inserted after the first paragraph:

> Total float belongs to the project and shall not be for the exclusive benefit of any party.

1-08.7 Maintenance During Suspension

The second paragraph is revised to read:

> At no expense to the Contracting Agency, the Contractor shall provide through the construction area safe, smooth, and unobstructed roadways and pedestrian access routes for public use during the suspension (as required in Section 1-07.23 or the Special Provisions.) This may include a temporary road, alternative pedestrian access route or detour.

Section 1-09, Measurement and Payment

April 2, 2012

1-09.2(5) Measurement

The second sentence in the first paragraph is revised to read:

> The frequency of verification checks will be such that at least one test weekly is performed for each scale used in weighing contract items of Work.

Section 8-01, Erosion Control and Water Pollution Control

April 2, 2012

8-01.3(2)D Mulching

The following two new paragraphs are inserted after the fourth paragraph

> Short-Term Mulch shall be hydraulically applied at the rate of 2500 pounds per acre and may be applied in one lift.
>
> Moderate-Term Mulch and Long-Term Mulch shall be hydraulically applied at the rate of 3500 pounds per acre with no more than 2000 pounds applied in any single lift.

8-01.3(2)E Soil Binders and Tacking Agents

The first paragraph is revised to read:

> Tacking agents or soil binders applied using a hydroseeder shall have a mulch tracer added to visibly aid uniform application. This tracer shall not be harmful to plant, aquatic, or animal life. A minimum of 125 pounds per acre and a maximum of 250 pounds per acre of Short-Term Mulch shall be used as a tracer.

The last two paragraphs are deleted.

INFORMATIONAL COPY ONLY

8-01.3(2)F Dates for Application of Final Seed, Fertilizer, and Mulch

In the first paragraph, "Engineer" is revised to read "Project Engineer".

Note 1 of the table in the first paragraph is revised to read:

> [1] Where Contract timing is appropriate, seeding, fertilizing, and mulching shall be accomplished during the fall period listed above

The third paragraph is deleted.

8-01.3(5) Placing Plastic Covering

The second and third paragraphs are revised to read:

> Clear plastic covering shall be used to promote seed germination when seeding is performed outside of the Dates for Application of Final Seed in Section 8-01.3(2)F. Black plastic covering shall be used for stockpiles or other areas where vegetative growth is unwanted.
>
> The plastic cover shall be installed and maintained in a way that prevents water from cutting under the plastic and prevents the plastic cover from blowing open in the wind.

8-01.3(6) Check Dams

This section is revised to read:

> Check dams shall be installed as soon as construction will allow, or when designated by the Engineer. The Contractor may substitute a different check dam, in lieu of what is specified in the contract, with approval of the Engineer. The check dam is a temporary or permanent structure, built across a minor channel. Water shall not flow through the check dam structure. Check dams shall be constructed in a manner that creates a ponding area upstream of the dam to allow pollutants to settle, with water from increased flows channeled over a spillway in the check dam. The check dam shall be constructed to prevent erosion in the area below the spillway. Check dams shall be placed perpendicular to the flow of water and installed in accordance with the Standard Plans. The outer edges shall extend up the sides of the conveyance to prevent water from going around the check dam. Check dams shall be of sufficient height to maximize detention, without causing water to leave the ditch. Check dams shall meet the requirements in Section 9-14.5(4).

8-01.3(7) Stabilized Construction Entrance

The first paragraph is revised to read:

> Temporary stabilized construction entrance shall be constructed in accordance with the Standard Plans, prior to beginning any clearing, grubbing, embankment or excavation. All quarry spall material used for stabilized construction entrance shall be free of extraneous materials that may cause or contribute to track out.

8-01.3(9)B Gravel Filter, Wood Chip, or Compost Berm

The first paragraph is revised to read:

> Filter berms shall retain sediment and direct flows. The gravel filter berm shall be a minimum of 1 foot in height and shall be maintained at this height for the entire time they are in use. Rock material used for filter berms shall meet the grading requirements in Section 9-03.9(2), but shall not include any recycled materials as outlined in Section 9-03.21.

INFORMATIONAL COPY ONLY

8-01.3(9)C Straw Bale Barrier
This section including title is revised to read:

8-01.3(9)C Vacant

8-01.3(11) Vacant
This section including title is revised to read:

8-01.3(11) Outlet Protection
Outlet protection shall prevent scour at the outlets of ponds, pipes, ditches or other conveyances. All quarry spall material used for outlet protection shall be free of extraneous material and meet the gradation requirements in Section 9-13.6.

8-01.3(13) Temporary Curb
This section is revised to read:

Temporary curbs shall divert or redirect water around erodible soils.

Temporary curbs shall be installed along pavement edges to prevent runoff from flowing onto erodible slopes. Water shall be directed to areas where erosion can be controlled. The temporary curbs shall be a minimum of 4 inches in height. Ponding shall not be in roadways.

8-01.4 Measurement
The third paragraph is revised to read:

Check dams will be measured per linear foot one time only along the completed check dam. No additional measurement will be made for check dams that are required to be rehabilitated or replaced due to wear.

This section is supplemented with the following:

Outlet Protection will be measured per each initial installation at an outlet location.

8-01.5 Payment
This section is supplemented with the following:

"Outlet Protection", per each.

Section 9-14, Erosion Control and Roadside Planting
April 2, 2012
9-14.3 Fertilizer
The second sentence in the first paragraph is revised to read:

It may be separate or in a mixture containing the percentage of total nitrogen, available phosphoric acid, and water-soluble potash or sulfur in the amounts specified.

9-14.4(2) Hydraulically Applied Erosion Control Products (HECPs)
The fourth row in Table 1 is revised to read:

INFORMATIONAL COPY ONLY

Heavy Metals	EPA 6020A Total Metals	Antimony – < 4 mg/kg Arsenic – < 6 mg/kg Barium – < 80 mg/kg Boron –< 160 mg/kg Cadmium – < 2 mg/kg Total Chromium – < 4 mg/kg Copper – < 10 mg/kg Lead – < 5 mg/kg Mercury – < 2 mg/kg Nickel – < 2 mg/kg Selenium – < 10 mg/kg Strontium – < 30 mg/kg Zinc – < 30 mg/kg

9-14.4(2)A Long Term Mulch

In the first paragraph, the phrase "within 2 hours of application" is deleted.

9-14.4(4) Wood Strand Mulch

The last sentence in the second paragraph is deleted.

This section is supplemented with the following new paragraph:

> The Contractor shall provide Material Safety Data Sheet (MSDS) that demonstrates that the product is not harmful to plant life and a test report performed in accordance with WSDOT Test Method 125 demonstrating compliance to this specification prior to acceptance.

9-14.4(8) Compost

The second paragraph is revised to read:

> Compost production and quality shall comply with WAC 173-350 and for biosolids composts, WAC 173-308.

The third paragraph is to read:

> Compost products shall meet the following physical criteria:
>
> 1. Compost material shall be tested in accordance with U.S. Composting Council Testing Methods for the Examination of Compost and Composting (TMECC) 02.02-B, "Sample Sieving for Aggregate Size Classification".

Fine compost shall meet the following gradation:

Sieve Size	Percent Passing	
	Minimum	Maximum
1"	100	
$^5/_8$"	90	100
¼"	75	100

Note Maximum particle length of 4 inches.

Medium compost shall meet the following gradation:

INFORMATIONAL COPY ONLY

Sieve Size	Percent Passing	
	Minimum	Maximum
1"	100	
5/8"	85	100
¼"	70	85

Note Maximum particle length of 4 inches. Medium compost shall have a carbon to nitrogen ration (C:N) between 18:1 and 35:1. The carbon to nitrogen ration shall be calculated using dry weight of "Organic Carbon" using TMECC 04.01A divided by the dry weight of "Total N" using TMECC 04.02D.

Coarse compost shall meet the following gradation:

Sieve Size	Percent Passing	
	Minimum	Maximum
2"	100	
1"	90	100
¾"	70	100
¼"	40	60

Note Maximum particle length of 6 inches. Coarse compost shall have a carbon to nitrogen ratio (C:N) between 25:1 and 35:1. The carbon to nitrogen ratio shall be calculated using the dry weight of "Organic Carbon" using TMECC 04.01A divided by the dry weight of "Total N" using TMECC 04.02D.

2. The pH shall be between 6.0 and 8.5 when tested in accordance with U.S. Composting Council TMECC 04.11-A "1:5 Slurry pH".

3. Manufactured inert material (plastic, concrete, ceramics, metal, etc.) shall be less than 1 percent by weight as determined by U.S. Composting Council TMECC 03.08-A "Classification of Inerts by Sieve Size".

4. Minimum organic matter shall be 40 percent by dry weight basis as determined by U.S. Composting Council TMECC 05.07A "Loss On-Ignition Organic Matter Method (LOI)".

5. Soluble salt contents shall be less than 4.0 mmhos/cm when tested in accordance with U.S. Composting Council TMECC 04.10 "Electrical Conductivity."

6. Maturity shall be greater than 80 percent in accordance with U.S. Composting Council TMECC 05.05-A, "Germination and Root Elongation".

7. Stability shall be 7-mg CO2–C/g OM/day or below in accordance with U.S. Composting Council TMECC 05.08-B "Carbon Dioxide Evolution Rate".

8. The compost product shall originate from organic waste as defined in WAC 173 350 as "Type 1 Feedstocks", "Type 2 Feedstocks", and/or "Type 3 Feedstocks". The Contractor shall provide a list of feedstock sources by percentage in the final compost product.

9. The Engineer may also evaluate compost for maturity using U.S. Composting Council TMECC 05.08-E "Solvita® Maturity Index". Fine compost shall score a

INFORMATIONAL COPY ONLY

number 6 or above on the Solvita® Compost Maturity Test. Medium and coarse compost shall score a 5 or above on the Solvita® Compost Maturity Test.

9-14.4(8)A Compost Approval

This section's title is revised to read:

9-14.4(8)A Compost Submittal Requirements

The first sentence in this section up until the colon is revised to read:

The Contractor shall submit the following information to the Engineer for approval:

Item No. 2 in the first paragraph is revised to read:

2. A copy of the Solid Waste Handling Permit issued to the manufacturer by the Jurisdictional Health Department in accordance with WAC 173-350 (Minimum Functional Standards for Solid Waste Handling) or for biosolid composts a copy of the Coverage Under the General Permit for Biosolids Management issued to the manufacturer by the Department of Ecology in accordance with WAC 173-308 (Biosolids Management)

9-14.5(2) Erosion Control Blanket

The second sentence in the first paragraph is revised to read:

The Contractor shall supply independent test results from the National Transportation Product Evaluation Program (NTPEP) meeting the following requirements in Tables 6 and 7:

9-14.5(4) Geotextile Encased Check Dam

This section including title is revised to read:

9-14.5(4) Check Dams

All materials used for check dams shall be non-toxic and not pose a threat to wildlife when installed.

This section is supplemented with the following new sub-sections:

9-14.5(4)A Biodegradable Check Dams

Biodegradable check dams shall meet the following requirements:

Biodegradable Check Dams	Materials
Wattle Check Dam	9-14.5(5)
Compost Sock Check Dam	9-14.5(6)
Coir Log Check Dam	9-14.5(7)

The Contractor may substitute a different biodegradable check dam as long as it complies with the following and is approved by the Engineer:

1. Made of natural plant fiber.

2. Netting if present shall be biodegradable.

INFORMATIONAL COPY ONLY

9-14.5(4)B Non-biodegradable Check Dams

Non-biodegradable check dams shall meet the following requirements:

1. Geotextile materials shall conform to section 9-33 for silt fence.

2. Other such devices that fulfill the requirements of section 9-14.5(4) and shall be approved by the Engineer prior to installation.

9-14.6(1) Description

In Item No. C in the fourth paragraph, "22-inch" is revised to read "2-inch".

INFORMATIONAL COPY ONLY

SPECIAL PROVISIONS

INTRODUCTION

The following Special Provisions are made a part of this contract and supersede any conflicting provisions of the 2012 Standard Specifications for Road, Bridge and Municipal Construction, and the foregoing Amendments to the Standard Specifications.

Several types of Special Provisions are included in this contract; General, Region, Bridges and Structures, and Project Specific. Special Provisions types are differentiated as follows:

(date)	General Special Provision
(******)	Notes a revision to a General Special Provision and also notes a Project Specific Special Provision.
(Regions date)	Region Special Provision
(BSP date)	Bridges and Structures Special Provision

General Special Provisions are similar to Standard Specifications in that they typically apply to many projects, usually in more than one Region. Usually, the only difference from one project to another is the inclusion of variable project data, inserted as a "fill-in".

Region Special Provisions are commonly applicable within the designated Region. Region designations are as follows:

Regions1

ER	Eastern Region
NCR	North Central Region
NWR	Northwest Region
OR	Olympic Region
SCR	South Central Region
SWR	Southwest Region
WSF	Washington State Ferries Division

Bridges and Structures Special Provisions are similar to Standard Specifications in that they typically apply to many projects, usually in more than one Region. Usually, the only difference from one project to another is the inclusion of variable project data, inserted as a "fill-in".

Project Specific Special Provisions normally appear only in the contract for which they were developed.

DIVISION 1 GENERAL REQUIREMENTS

DEFINITIONS AND TERMS

1-01.3 Definitions

This Section is supplemented with the following:

(******)
The venue of all causes of action arising from the advertisement, award, execution, and performance of the contract shall be in the Superior Court of Grant County, Washington.

INFORMATIONAL COPY ONLY

All references to "State" or "State of Washington" are changed to "Grant County, Washington".

All references to "Commission", "Secretary of Transportation", or "Washington State Transportation Commission", are changed to "Board of County Commissioners, Grant County, Washington".

All references to "Department", or "Department of Transportation" are changed to "Department of Public Works, Grant County, Washington".

All references to "Superior Court of Thurston County, Washington" are changed to "Superior Court of Grant County, Washington".

DESCRIPTION OF WORK

(******)
This contract provides for the construction of 0.50 miles of a county road in Grant County, WA, and includes roadway excavation, embankment compaction, crushed surfacing base course, maintenance rock, drainage items, hot mix asphalt, monuments, seeding, fertilizing, mulching and other work all in accordance with the attached Contract Plans, these Contract Provisions and the Standard Specifications.

BID PROCEDURES AND CONDITIONS

1-02.1 Prequalification of Bidders

Delete this Section and replace it with the following:

1-02.1 Qualifications of Bidder

(******)
Bidders must meet the minimum qualifications of RCW 39.04.350(1), as amended:

Before award of a public works contract, a bidder must meet the following responsibility criteria to be considered a responsible bidder and qualified to be awarded a public works project. The bidder must:

(a) At the time of bid submittal, have a certificate of registration in compliance with chapter 18.27 RCW;
(b) Have a current state unified business identifier number;
(c) If applicable, have industrial insurance coverage for the bidder's employees working in Washington as required in Title 51 RCW; an employment security department number as required in Title 50 RCW; and a state excise tax registration number as required in Title 82 RCW; and
(d) Not be disqualified from bidding on any public works contract under RCW 39.06.010 or 39.12.065(3).
(e) Bidders shall be qualified by experience, financing, equipment, and organization to do the work called for in the Contract Documents. The Contracting Agency reserves the right to take whatever action it deems necessary to ascertain the ability of the bidder to perform the work satisfactorily. The Contracting Agency's actions may include a pre-qualification procedure prior to the bidder being furnished a proposal form on any contract, or a pre-award survey of the bidder's qualifications prior to award.

INFORMATIONAL COPY ONLY

Preparation of Proposal
Section 1-02.6 is supplemented with the following

(******)

Alternative Bids

The bidding proposal on this project requires the bidder to submit a bid on two alternatives for construction of *** Grading***

Bid Proposal

The bid proposal is composed of the following parts: Base Bid, including Alternate ***A1*** and Alternate ***A2***

The base bid includes all items that do not change as to quantity, dimension, or type of construction.

The alternate portion of the bid proposal contains two items, of which only one alternate will be used. The soil to be removed may be contaminated, see the attached soil sample test data for test pits and borings.

Alternative A1

Alternate A1 involves excavating and hauling, to the Grant County Landfill, all contaminated, non-saturated, soil located between stations 30+00 and 33+35.

The bid item for Alternate A1 is listed in the bid proposal.

Alternative A2

Alternate A2 involves excavating and hauling, to a stockpile site as shown on sheet #5 of the contract plans, all contaminated, non-saturated, soil located between stations 30+00 and 33+35. The contractor will be required to cover and secure, the excavated soil, with 6 mill plastic once all contaminated soil is stockpiled.

The bid item for Alternate A2 is listed in the bid proposal.

Bidding Procedures

The bidder shall submit a price on each and every item of work included in the proposal including Alternate A1 and Alternate A2.

The successful bidder will be determined by the lowest total of all bid items including Alternate A1 and Alternate A2. Award will be based on the lowest total subject to the requirements of Section 1-03.

Award Procedures

The successful bidder will be the bidder submitting the lowest total of all bid items including Alternate A1 and Alternate A2

Public Opening Of Proposal
Section 1-02.12 is supplemented with the following:

(******)

Date Of Opening Bids

Sealed bids are to be received at the following location prior to the time specified:

INFORMATIONAL COPY ONLY

The Office of the Board of County Commissioners, Grant County Courthouse, Room 207, 35 C St. NW, P.O. Box 37, Ephrata, WA 98823

The bid opening date for this project is **August 28, 2012**. Bids received will be publicly opened and read after **1:30 P.M.** on this date.

1-02.13 Irregular Proposals
(March 13, 2012 APWA GSP)

Revise item 1 to read:

1. A proposal will be considered irregular and will be rejected if:
   a. The Bidder is not prequalified <u>when so required</u>;
   b. The authorized proposal form furnished by the Contracting Agency is not used or is altered;
   c. The completed proposal form contains any unauthorized additions, deletions, alternate Bids, or conditions;
   d. The Bidder adds provisions reserving the right to reject or accept the award, or enter into the Contract;
   e. A price per unit cannot be determined from the Bid Proposal;
   f. The Proposal form is not properly executed;
   g. The Bidder fails to submit or properly complete a Subcontractor list, if applicable, as required in Section 1-02.6;
   h. The Bidder fails to submit or properly complete a Disadvantaged Business Enterprise Certification, if applicable, as required in Section 1-02.6;
   i. The Bidder fails to submit written confirmation from each DBE firm listed on the Bidder's completed DBE Utilization Certification that they are in agreement with the bidders DBE participation commitment, if applicable, as required in Section 1-02.6, or if the written confirmation that is submitted fails to meet the requirements of the Special Provisions;
   j. The Bidder fails to submit DBE Good Faith Effort documentation, if applicable, as required in Section 1-02.6, or if the documentation that is submitted fails to demonstrate that a Good Faith Effort to meet the Condition of Award was made;
   k. The Bid Proposal does not constitute a definite and unqualified offer to meet the material terms of the Bid invitation; or
   l. <u>More than one proposal is submitted for the same project from a Bidder under the same or different names.</u>

1-02.14 Disqualification of Bidders
(March 25, 2009 APWA GSP, Option B)

Delete this Section and replace it with the following:

A Bidder will be deemed not responsible if:

1. the Bidder does not meet the mandatory bidder responsibility criteria in RCW 39.04.350(1), as amended; or
2. evidence of collusion exists with any other Bidder or potential Bidder. Participants in collusion will be restricted from submitting further bids; or

INFORMATIONAL COPY ONLY

3. the Bidder, in the opinion of the Contracting Agency, is not qualified for the work or to the full extent of the bid, or to the extent that the bid exceeds the authorized prequalification amount as may have been determined by a prequalification of the Bidder; or
4. an unsatisfactory performance record exists based on past or current Contracting Agency work or for work done for others, as judged from the standpoint of conduct of the work; workmanship; or progress; affirmative action; equal employment opportunity practices; termination for cause; or Disadvantaged Business Enterprise, Minority Business Enterprise, or Women's Business Enterprise utilization; or
5. there is uncompleted work (Contracting Agency or otherwise), which in the opinion of the Contracting Agency might hinder or prevent the prompt completion of the work bid upon; or
6. the Bidder failed to settle bills for labor or materials on past or current contracts, unless there are extenuating circumstances acceptable to the Contracting Agency; or
7. the Bidder has failed to complete a written public contract or has been convicted of a crime arising from a previous public contract, unless there are extenuating circumstances acceptable to the Contracting Agency; or
8. the Bidder is unable, financially or otherwise, to perform the work, in the opinion of the Contracting Agency; or
9. there are any other reasons deemed proper by the Contracting Agency.

As evidence that the Bidder meets the bidder responsibility criteria above, the apparent two lowest Bidders must submit to the Contracting Agency within 24 hours of the bid submittal deadline, documentation (sufficient in the sole judgment of the Contracting Agency) demonstrating compliance with all applicable responsibility criteria, including all documentation specifically listed in the supplemental criteria. The Contracting Agency reserves the right to request such documentation from other Bidders as well, and to request further documentation as needed to assess bidder responsibility.

The basis for evaluation of Bidder compliance with these supplemental criteria shall be any documents or facts obtained by Contracting Agency (whether from the Bidder or third parties) which any reasonable owner would rely on for determining such compliance, including but not limited to: (i) financial, historical or operational data from the Bidder; (ii) information obtained directly by the Contracting Agency from owners for whom the Bidder has worked, or other public agencies or private enterprises; and (iii) any additional information obtained by the Contracting Agency which is believed to be relevant to the matter.

If the Contracting Agency determines the Bidder does not meet the bidder responsibility criteria above and is therefore not a responsible Bidder, the Contracting Agency shall notify the Bidder in writing, with the reasons for its determination. If the Bidder disagrees with this determination, it may appeal the determination within 24 hours of receipt of the Contracting Agency's determination by presenting its appeal to the Contracting Agency. The Contracting Agency will consider the appeal before issuing its final determination. If the final determination affirms that the Bidder is not responsible, the Contracting Agency will not execute a contract with any other Bidder until at least two business days after the Bidder determined to be not responsible has received the final determination.

CONTROL OF WORK

1-05.13 Superintendents, Labor and Equipment of Contractor

(******)

INFORMATIONAL COPY ONLY

Revise the seventh paragraph to read:

> Whenever the Contracting Agency evaluates the Contractor's qualifications pursuant to Section 1-02.1 and 1-02.14, it will take these performance reports into account.

(March 13, 1995)

Cooperation With Other Contractors

Section 1-05.14 is supplemented with the following:

Other Contracts Or Other Work

It is anticipated that the following work adjacent to or within the limits of this project will be performed by others during the course of this project and will require coordination of the work:

1. Utility relocations and/or normal maintenance work by telephone and power companies.
2. Normal maintenance work by Grant County Road and Landfill crews.
3. Normal maintenance work by irrigation district crews.

LEGAL RELATIONS AND RESPONSIBILITIES TO THE PUBLIC

State Taxes

Section 1-07.2 is supplemented with the following:

(March 13, 1995)
The work on this contract is to be performed upon lands whose ownership obligates the Contractor to pay Sales tax. The provisions of Section 1-07.2(1) apply.

Permits and Licenses

Section 1-07.6 is supplemented with the following:

(March 13, 1995)
No hydraulic permits are required for this project unless the Contractor's operations use, divert, obstruct, or change the natural flow or bed of any river or stream, or utilize any of the waters of the State or materials from gravel or sand bars, or from stream beds.

Load Limits

Section 1-07.7 is supplemented with the following:

(March 13, 1995)
Whenever the Contractor obtains materials from a source other than that provided by the Contracting Agency, or provides a source for materials not designated to come from a source provided by the State and the location of the source necessitates hauling on other than State Highways, the Contractor shall, at the Contractor's expense, make all arrangements for the use of the haul routes.

Contractor's Responsibility for Work

(August 6, 2001)
Repair of Damage
Section 1-07.13(4) is revised to read:

INFORMATIONAL COPY ONLY

The Contractor shall promptly repair all damage to either temporary or permanent work as directed by the Engineer. For damage qualifying for relief under Sections 1-07.13(1), 1-07.13(2), or 1-07.13(3), payment will be made in accordance with Section 1-04.4. Payment will be limited to repair of damaged work only. No payment will be made for delay or disruption of work.

Spill, Prevention, Control, and Coutermeasures Plan
Section 1-07.15(1) is supplemented with the following:

(*****)
Present Site Characterization
The Ephrata Landfill receives mixed municipal solid waste. The exact nature of materials and wastes disposed of at the landfill is unknown. The possibility exists of encountering gases, liquids, and/or other substances during the work that may be potentially hazardous to the safety and health of personnel, especially those working in the vicinity of open excavations and pipes venting gases. Since other substances and gases may be present and may be found, the Contractor shall consider the possibility of encountering other substances in developing a site safety and health program.
The Contractor shall be aware of the potential for landfill gas, landfill gas condensate, and leachate to be present in the work area.
The Contractor shall provide all personnel working on the project with required orientation and training on the potential hazards anticipated and the appropriate use of safety equipment

(******)
Contractor's Responsibility for Health and Safety for Hazardous Waste Operations
Due to the nature of the Ephrata Landfill, the Contractor is cautioned that there is a possibility of encountering potentially hazardous gases, liquids, and other substances that may be harmful to personal health and safety while performing elements of the work. The Contractor shall do whatever is necessary for health and safety and be solely and completely responsible for conditions on the site for this project, including safety of all persons, employees, and property during the Contract period. This requirement shall apply continuously and not be limited to working hours.
For all work conducted for this project at the Ephrata Landfill, the Contractor shall ensure compliance with all requirements of the Federal Occupational Health and Safety Act of 1970 (OSHA), including OSHA 29 CFR Part 1910.120 Hazardous Waste Operations and Emergency response, Final Rule, and with the Washington Industrial Health and Safety Act of 1973 (WISHA), WAC 296-62 Part P, as they apply to health and safety provisions for hazardous waste operations, and all other applicable federal, state, county, and local laws, ordinances, codes, the requirements set forth herein, and any regulations that may be specified in other parts of this Contract.
The Contractor shall at all times provide proper facilities for safe access to the work by authorized persons. The Contractor shall develop and maintain, for the duration of this Contract, a site-specific health and safety plan (hereinafter

INFORMATIONAL COPY ONLY

"Health and Safety Plan") that will effectively incorporate and implement all required safety provisions.

The Health and Safety Plan shall be submitted by the Contractor within 14 days after award of the Contract. The Health and Safety Plan shall be signed by a certified industrial hygienist registered in the State of Washington. The ENGINEER will review the Health and Safety Plan. Such review by the ENGINEER will not constitute as approval of the adequacy of the Contractor's safety supervisor, the safety program, or any safety measures taken in, on, or near the work areas. Rather, the ENGINEER'S review is to confirm that the Health and Safety Plan was prepared as required in this Specification.

The Health and Safety Plan shall include the following:

1. Names of key personnel and alternates responsible for site health and safety and appointment of a Site Health and Safety Officer.
2. Health and safety risk analysis for each site task and operation.
3. Employee training assignments.
4. Personal protective equipment to be used by employees for each of the site tasks and operations being conducted.
5. Medical surveillance requirements.
6. Frequency and types of air monitoring, personnel monitoring, and environmental sampling techniques and instrumentation to be used. Methods of maintenance and calibration of monitoring and sampling equipment to be used.
7. Site control measures.
8. Decontamination procedures.
9. Site standard operating procedures.
10. Emergency response plan.
11. Required personal protective equipment and other safety equipment.
12. Confined space entry procedures.
13. Spill containment program.

If any regulatory agency of jurisdiction finds the Health and Safety Plan inadequate to protect the employees and the public, the Contractor shall, at its own expense, modify the Health and Safety Plan as required by such regulatory agency.

The Contractor shall supply to the OWNER the names and phone numbers of responsible personnel representing the Contractor and each subcontractor for the purpose of contacting these individuals in the event of an emergency.

(******)

Measurement and Payment

The Health and Safety Plan is incidental to the construction. All costs shall be included in the other items.

Utilities And Similar Facilities

Section 1-07.17 is supplemented with the following:

(******)

Locations and dimensions shown in the Plans for existing facilities are in accordance with available information obtained without uncovering, measuring, or other verification.

INFORMATIONAL COPY ONLY

Public and private utilities, or their Contractors, will furnish all work necessary to adjust, relocate, replace, or construct their facilities unless otherwise provided for in the Plans or these Special Provisions. Such adjustment, relocation, replacement, or construction will be done during the prosecution of the work for this project.

The Contractor shall call the Utility Location Request Center (One Call Center), for field location, not less than two nor more than ten business days before the scheduled date for commencement of excavation which may affect underground utility facilities, unless otherwise agreed upon by the parties involved. A business day is defined as any day other than Saturday, Sunday, or a legal local, State, or Federal holiday. The telephone number for the One Call Center for this project is 1-800-424-5555. If no one-number locator service is available, notice shall be provided individually to those owners known to or suspected of having underground facilities within the area of proposed excavation.

The Contractor is alerted to the existence of Chapter 19.122 RCW, a law relating to underground utilities. Any cost to the Contractor incurred as a result of this law shall be at the Contractor's expense.

No excavation shall begin until all known facilities, in the vicinity of the excavation area, have been located and marked.

The following addresses and telephone numbers of utility companies and other agencies known or suspected of having facilities within the project limits are supplied for the Contractor's convenience:

- Grant County PUD, 30 C Street SW,
  Ephrata, WA 98823, (509) 754-3451
- QWest, 904 N. Columbus
  Spokane, WA 99202, (509) 455-2733
- Quincy-Columbia Irrigation District, 1720 S. Central Ave.,
  Quincy, WA 98848, (509) 787-3591
- United States Bureau of Reclamation, 32 C Street NW
  Ephrata, WA 98823, (509) 754-0200

Public Liability and Property Damage Insurance

(January 5, 2004)
Item number 1 in the first paragraph of Section 1-07.18 is deleted.

Item No. 2 of the first paragraph of Section 1-07.18 is revised to read:

(January 3, 2011)
Reduced Insurance Requirement

2. Commercial General Liability Insurance written under ISO Form CG0001 or its equivalent with minimum limits of $1,000,000 per occurrence and in the aggregate for each policy year. Products and completed operations coverage shall be provided for a period of three years following Substantial Completion of the work.

Public Convenience and Safety

Construction Under Traffic
Section 1-07.23(1) is supplemented with the following:

INFORMATIONAL COPY ONLY

(Janaury 2, 2012)

Work Zone Clear Zone

The Work Zone Clear Zone (WZCZ) applies during working and nonworking hours. The WZCZ applies only to temporary roadside objects introduced by the Contractor's operations and does not apply to preexisting conditions or permanent Work. Those work operations that are actively in progress shall be in accordance with adopted and approved Traffic Control Plans, and other contract requirements.

During nonworking hours equipment or materials shall not be within the WZCZ unless they are protected by permanent guardrail or temporary concrete barrier. The use of temporary concrete barrier shall be permitted only if the Engineer approves the installation and location.

During actual hours of work, unless protected as described above, only materials absolutely necessary to construction shall be within the WZCZ and only construction vehicles absolutely necessary to construction shall be allowed within the WZCZ or allowed to stop or park on the shoulder of the roadway.

The Contractor's nonessential vehicles and employees private vehicles shall not be permitted to park within the WZCZ at any time unless protected as described above.

Deviation from the above requirements shall not occur unless the Contractor has requested the deviation in writing and the Engineer has provided written approval.

Minimum WZCZ distances are measured from the edge of traveled way and will be determined as follows:

Minimum Work Zone Clear Zone Distance

Posted Speed	Distance From Traveled Way (Feet)
35 mph or less	10*
40 mph	15
45 to 55 mph	20
60 mph or greater	30

* or 2-feet beyond the outside edge of sidewalk

PROSECUTION AND PROGRESS

Subcontracting

Section 1-08.1 is supplemented with the following:

(October 12, 1998)

Prior to any subcontractor or agent beginning work, the Contractor shall submit to the Engineer a certification (WSDOT Form 420-004) that a written agreement between the Contractor and the subcontractor or between the subcontractor and any lower tier

INFORMATIONAL COPY ONLY

subcontractor has been executed. This certification shall also guarantee that these subcontract agreements include all the documents required by the Special Provision Federal Agency Inspection.

A subcontractor or lower tier subcontractor will not be permitted to perform any work under the contract until the following documents have been completed and submitted to the Engineer:

1. Request to Sublet Work (Form 421-012), and
2. Contractor and Subcontractor or Lower Tier Subcontractor Certification for Federal-aid Projects (Form 420-004).

The Contractor's records pertaining to the requirements of this Special Provision shall be open to inspection or audit by representatives of the Contracting Agency during the life of the contract and for a period of not less than three years after the date of acceptance of the contract. The Contractor shall retain these records for that period. The Contractor shall also guarantee that these records of all subcontractors and lower tier subcontractors shall be available and open to similar inspection or audit for the same time period.

Prosecution Of Work

The first sentence of Section 1-08.4 is revised to read:

(******)
The Contractor shall begin work on September 17, 2012, unless otherwise approved by the Engineer.

Time For Completion

The third paragraph of Section 1-08.5 is revised to read:

(******)
Contract time shall begin on the first working day. The first working day shall be September 17, 2012, unless otherwise approved by the Engineer.

Section 1-08.5 is supplemented with the following:

(******)
This project shall be physically completed within **30** working days.

Should the Contractor desire to perform work on any Saturday, Sunday or Holiday during the life of this contract, he shall request written permission from the Engineer after submitting a new work schedule specifying the exact dates on which the work is to be performed.

Should the Contractor desire to begin work before 6:30 am, or desire to work two separate or overlapping shifts during a single 24 hour day, or desire to work a shift longer than 10 hours in a single 24 hour day, he shall request written permission from the Engineer after submitting a new work schedule specifying the exact dates on which the requested work shifts are to be performed.

The Engineer will consider the Contractor's request and may either approve or deny any or all working dates or shifts contained in the new progress schedule.

INFORMATIONAL COPY ONLY

No additional compensation will be given the Contractor for any delays and costs incurred because of this provision. All costs incurred shall be considered incidental to and included in other applicable contract items.

MEASUREMENT AND PAYMENT

(March 13, 1995)
Payments
Section 1-09.9 is supplemented with the following:

The quantity of the following items to be paid for on this project shall be the quantity shown in the Proposal, unless changes are made in accordance with Section 1-04.4 which affect this quantity. The quantity shown in the Proposal will be adjusted by the amount of the change and will be paid for as specified in Section 1-04.4.

1. Roadway Excavation incl. Haul
2. Embankment Compaction

The quantities in the Proposal are listed only for the convenience of the Contractor in determining the volume of work involved and are not guaranteed to be accurate. The prospective bidders shall verify these quantities before submitting a bid. No adjustments other than for approved changes will be made in the quantity even though the actual quantities required may deviate from those listed.

The unit contract price for these items shall be full pay to construct and complete this portion of the work.

DIVISION 2 EARTHWORK

CLEARING, GRUBBING, AND ROADSIDE CLEAN UP

Description
Section 2-01.1 is supplemented with the following:

(March 13, 1995)
Clearing and grubbing on this project shall be performed within the following limits:

Sta. 24+50 to 51+00

ROADWAY EXCAVATION AND EMBANKMENT

Section 2-03 is supplemented with the following:

(*****)
Contaminated/Saturated soil is located between stations 30+00 to 33+35. The contractor will be required to excavate all contaminated/saturated soil from existing ground to bedrock, which varies in depth from 6' to 8', as shown on PgG Figure #1. All contaminated/saturated soil shall be excavated and hauled to a stockpile site created by the contractor. The site of the stockpile and detail of stockpile floor can be found on sheet #5 of the contract plans. Payment for all work required to construct stockpile area

INFORMATIONAL COPY ONLY

and excavate, haul, and stockpile contaminated/saturated soil shall be include in bid item #5 Contaminated/Saturated Soil Excavation and Haul.

Section 2-03 is supplemented with the following:

(*****)
Due to the excessive rocks to be encountered during the roadway excavation, the contractor should be aware that the quantity of usable material is unknown. Therefore, the quantity of borrow excavation required for this project may vary from the quantity shown in the proposal.

Payment
Section 2-03.5 is supplemented with the following:

(*****)
The unit contract price shall be full payment for the purchase, loading, hauling, placing and compacting of materials provided in stockpile or, if so chosen by the Contractor, for the furnishing, hauling, placing and compacting of materials obtained by the Contractor from an approved source of the Contractor's own choice and acquisition.

If the Contractor chooses to use the materials existing in stockpile, the County shall deduct the costs of such aggregates from monthly progress estimates in accordance with the rates specified above and based on the quantity of materials allowed by the Engineer on the monthly progress payments and final estimate.

Construction Requirements

Section 2-03.3 is supplemented with the following:

(*****)
Rock will be encountered from Sta. 34+00 to 51+00.

Disposal Of Surplus Material
Section 2-03.3(7)A is supplemented with the following:

(******)
A waste site is provided by the County for only the disposal of rock, from the excess roadway excavation as shown on Plan Sheet #4 and is located between station 34+00 and 40+00..

Borrow
Section 2-03.3(13) is supplemented with the following

(******)
A borrow site is provided at the Ephrata Landfill located approximately 3,000 feet south of the project. The contractor shall contact the landfill operations manager for a location of borrow material.

Payment
(******)

INFORMATIONAL COPY ONLY

The unit contract price bid per cubic yard for "Borrow Excavation Incl. Haul" shall be full compensation for performing the work outlined herein and in accordance with the plans and specifications.

DIVISION 3 PRODUCTION FROM QUARRY AND PIT SITES AND STOCKPILING

PRODUCTION FROM QUARRY AND PIT SITES

State Furnished Material Sources
Section 3-01.3 is supplemented with the following:

(******)
The following source(s) of stockpiled materials are made available to the Contractor at the unit prices shown under the section entitled Stockpiling Aggregates:

Stockpile Site ** #558 *** source for ***crushed surfacing base course, maintenance rock & Gravel Backfill for Pipe Zone Bedding*** is located in Section 4, Township 20 North, Range 29 East W.M., as shown in the Plans.

STOCKPILING AGGREGATES

General Requirements

Removing Aggregates From Stockpiles
Section 3-02.2(7) is supplemented with the following:

(******)
Crushed Surfacing Base Course and Maintenance Rock aggregates for use in this project exist in stockpile at the location and for the unit prices listed below and in the amounts shown in the Plans.

Location	Material	Price
Index #558, PS–292	Crushed Surfacing Base Course	$3.33/Ton
Ephrata Landfill Pit	Maintenance Rock	$3.73/Ton
Sec. 33, T21N, R26 E WM	Gravel Backfill For Pipe Zone Bedding	$5.86/C.Y.

The Contractor may obtain material from other sources provided they are approved by the Engineer and provided the Contractor makes all arrangements and pays all expenses required for the acquisition of the materials.

Payment
Section 3-02.5 is supplemented with the following:

(******)
The unit contract price shall be full payment for the purchase, loading, hauling, placing and compacting of materials provided in stockpile or, if so chosen by the Contractor, for the furnishing, hauling, placing and compacting of materials obtained by the Contractor from an approved source of the Contractor's own choice and acquisition.

INFORMATIONAL COPY ONLY

If the Contractor chooses to use the materials existing in stockpile, the County shall deduct the costs of such aggregates from monthly progress estimates in accordance with the rates specified above and based on the quantity of materials allowed by the Engineer on the monthly progress payments and final estimate.

SITE RECLAMATION

Contracting-Agency Provided Sites

Section 3-03.2(1) is supplemented with the following:

(March 13, 1995)

Site reclamation shall be performed by the Contracting Agency on all sites furnished by the Contracting Agency.

DIVISION 4 BASES

BALLAST AND CRUSHED SURFACING

Construction Requirements

Equipment

The first sentence of Section 4-04.3(1) is revised to read:

(******)

All equipment necessary for the satisfactory performance of this construction shall be on the project and approved by the Engineer prior to beginning work. The Contractor will be required to demonstrate that equipment of sufficient size, number, and reliability has been provided to meet the project schedule submitted by the Contractor, if requested by the Engineer.

Placing and Spreading

The third paragraph of Section 4-04.3(4) is supplemented with the following:

(******)

The Contractor will be required to fill each hauling vehicle with the same quantity of crushed aggregate. This is necessary in order to provide consistent spreads within the limits of the specific section determined by the Engineer.

The Contractor will place the material in such a way as to minimize the impact of the hauling vehicles. Hauling over any of the surfacing materials prior to processing shall not be permitted.

Miscellaneous Requirement

The second sentence of the first paragraph of Section 4-04.3(7) is revised to read:

(******)

Each course of surfacing material shall be placed in its entirety before placing the succeeding course unless otherwise authorized by the Engineer. The Contractor shall repair any segregated areas by reprocessing the effected section of each course before placing any additional material.

INFORMATIONAL COPY ONLY

DIVISION 5 SURFACE TREATMENTS AND PAVEMENTS

HOT MIX ASPHALT

Materials

Section 5-04.2 is supplemented with the following:

(******)
The Contractor shall supply the Engineer a report stating the percentage of RAP utilized each day in the production of HMA.

Construction Requirements

5-04.3(7) A Mix Design
Delete this section and replace it with the following;

(*****)
General. Prior to the production of HMA, the Contractor shall determine a design aggregate structure and asphalt binder content in accordance with WSDOT Standard Operating Procedure 732. Once the design aggregate structure and asphalt binder content have been determined, the Contractor shall submit the HMA mix design on DOT form 350-042 demonstrating the design meets the requirements of Sections 9-03.8(2) and 9-03.8(6). HMA accepted by nonstatistical evaluation requires a mix design verification. For HMA accepted by commercial evaluation only the first page of DOT form 350-042 and the percent of asphalt binder is required. In no case shall the paving begin before the determination of anti-strip requirements has been made. Anti-strip requirements will be determined by:

a. Testing by WSDOT in accordance with TM 718.
b. Testing by Contractor in accordance with WSDOT TM 718.
c. Historical aggregate source ant-strip use provided by WDOT.

The mix design will be the initial Job Mix Formula (JMF) for the HMA being produced. Any additional adjustments to the JMF will require the approval of the Project Engineer and may be made per Section 9-03.8(7).

Mix Design Verification. Verification shall be accomplished by one of the following processes:

a. Submit samples to WSDOT State Materials Lab for WSDOT verification testing in accordance with WSDOT Standard Specifications.
b. Reference a mix design that has been previously verified by WSDOT State Materials Lab on a previous project.

Mix design verification is valid for one year from the date of verification. At the discretion of the Engineer, agencies may accept mix designs verified beyond the verification year with certification from the Contractor that the materials and sources are the same as those shown on the original mix design.

Three working days prior to the first day of paving, six Ignition Furnace Calibration Samples shall be obtained to calibrate the Ignition Furnaces used for acceptance testing of the HMA. Calibration samples shall be provided by the Contractor when directed by

INFORMATIONAL COPY ONLY

the Engineer. Calibration samples shall be prepared in accordance with WSDOT SOP 728.

5-04.3(8)A1, General

Delete these sections and replace them with the following:

(******)

Acceptance of HMA shall be as defined under nonstatistical or commercial evaluation.

Nonstatistical evaluation will be used for all HMA not designated as Commercial HMA in the contract documents.

Commercial evaluation will be used for Commercial HMA and for other classes of HMA as allowed by the contract. Commercial HMA may be used for amounts of HMA less than 2,500 tons in any application. Nonstructural applications of HMA accepted by commercial evaluation shall be as approved by the Project Engineer. Sampling and testing of HMA accepted by commercial evaluation will be at the option of the Project Engineer. Commercial HMA can be accepted by a contractor certification letter stating the material meets the HMA requirements defined in the contract. Where HMA Commercial is used for the traveled way, a minimum of one acceptance test to verify gradation, fracture, sand equivalent, and oil content is required.

5-04.3(8)A4, Definition of Sampling Lot and Sublot

First paragraph is deleted and replace it with the following:

(******)

For the purpose of acceptance sampling and testing, a lot is defined as the total quantity of material or work produced for each job mix formula (JMF) placed. Only one lot per mix design will be expected to occur. The initial JMF is defined in Section 5-04.3(7)A Mix Design. The Contractor may request a change in the JMF in accordance with Section 9-03.8(7). If the request is approved, all of the material produced up to the time of the change will be evaluated on the basis of tests on samples taken from that material and a new lot will begin.

5-04.3(8)A5, Test Results

Delete this section and replace it with the following:

(******)

The Engineer will furnish the Contractor with a copy of the results of all acceptance testing performed in the field at the beginning of the next paving shift. The Engineer will also provide the Composite Pay Factor (CPF) of the completed sublots after three sublots have been produced. The CPF will be provided by the midpoint of the next paving shift after sampling. Sublot sample test results (gradation and asphalt binder content) may be challenged by the Contractor. To challenge test results, the Contractor shall submit a written challenge within 7-calendar days after receipt of the specific test results. A split of the original acceptance sample will be sent for testing to either the Region Materials Laboratory or the State Materials Laboratory as determined by the Project Engineer. The split of the sample with challenged results will not be tested with the same equipment or by the same tester that ran the original acceptance test. The challenge sample will be tested for a complete gradation analysis and for asphalt binder content. The results of the challenge sample will be compared to the original results of the acceptance sample test and evaluated according to the following criteria:

Deviation

INFORMATIONAL COPY ONLY

U.S. No. 4 sieve and larger Percent passing ±4.0
U.S. No. 8 sieve Percent passing ±2.0
U.S. No. 200 sieve Percent passing ±0.4
Asphalt binder Percent binder content ±0.3

If the results of the challenge sample testing are within the allowable deviation established above for each parameter, the acceptance sample test results will be used for acceptance of the HMA. The cost of testing will be deducted from any monies due or that may come due the Contractor under the Contract at the rate of $250 per challenge sample. If the results of the challenge sample testing are outside of any one parameter established above, the challenge sample will be used for acceptance of the HMA and the cost of testing will be the Contracting Agency's responsibility.

5-04.3(1)A7, Test Section – HMA Mixtures
(March 10, 2010 APWA GSP)

Delete this section

5-04.5(1)A Price Adjustments for Quality of HMA Mixture
(March 10, 2010 APWA GSP)

Delete the first paragraph and table and replaced them with the following:

Statistical analysis of quality of gradation and asphalt content will be performed based on Section 1-06.2 using the following price adjustment factors:

Table of Price Adjustment Factors

Constituent	**Factor "f"**
All aggregate passing: 1 ½", 1", ¾", ½", 3/8" and No. 4 sieves	2
All aggregate passing No. 8	15
All aggregate passing No. 200 sieve	20
Asphalt binder	50

Delete items 1-3 in Paragraph two and replaced with the following

A pay factor will be calculated for sieves listed in Section 9-03.8(7) for the class of HMA and for the asphalt binder.

1. **Nonstatistical Evaluation.** Each lot of HMA produced under Nonstatisical Evaluation and having all constituents falling within the tolerance limits of the job mix formula shall be accepted at the unit contract price with no further evaluation. When one or more constituents fall outside the nonstatistical acceptance tolerance limits in Section 9-03.8(7), the lot shall be evaluated in accordance with Section 1-06.2 to determine the appropriate CPF. The nonstatistical tolerance limits will be used in the calculation of the CPF and the maximum CPF shall be 1.00. When less than three sublots exist, backup samples of the existing sublots or samples from the street shall be tested to provide a minimum of three sets of results for evaluation.

2. **Commercial Evaluation.** If sampled and tested, HMA produced under Commercial Evaluation and having all constituents falling within the

INFORMATIONAL COPY ONLY

tolerance limits of the job mix formula shall be accepted at the unit contract price with no further evaluation. When one or more constituents fall outside the commercial acceptance tolerance limits in Section 9-03.8(7), the lot shall be evaluated to determine the appropriate CPF. The commercial tolerance limits will be used in the calculation of the CPF and the maximum CPF shall be 1.00. When less than three sublots exist, backup samples of the existing sublots or samples from the street shall be tested to provide a minimum of three sets of results for evaluation.

For each lot of HMA produced under Nonstatistical or Commercial Evaluation when the calculated CPF is less than 1.00, a Nonconforming Mix factor (NCMF) will be determined. The NCMF equals the algebraic difference of CPF minus 1.00 multiplied by 60 percent. The Job Mix Compliance Price Adjustment will be calculated as the product of the NCMF, the quantity of HMA in the lot in tons, and the unit contract price per ton of the mix.

If a constituent is not measured in accordance with these Specifications, its individual pay factor will be considered 1.00 in calculating the composite pay factor.

5-04.5(1)B Price Adjustments for Quality of HMA Compaction (March 10, 2010 APWA GSP)

Delete this section and replace it with the following:

The maximum CPF of a compaction lot is 1.00

For each compaction lot of HMA when the CPF is less than 1.00, a Nonconforming Compaction Factor (NCCF) will be determined. THE NCCF equals the algebraic difference of CPF minus 1.00 multiplied by 40 percent. The Compaction Price Adjustment will be calculated as the product of the NCCF, the quantity of HMA in the lot in tons and the unit contract price per ton of the mix.

DIVISION 8 MISCELLANEOUS CONSTRUCTION

EROSION CONTROL AND WATER POLLUTION CONTROL

Construction Requirements

Mulching
Section 8-01.3(2)D is supplemented with the following:

(******)
Wood cellulose fiber suitable for use with a hydroseeder shall be applied at a rate of 2,000 pounds per acre or as specified by the manufacturer for the type of work outlined in this contract and within forty eight hours after seeding. Wood cellulose fiber will be applied separately after seeding and fertilizing.

WIRE FENCE AND GATES

(******)

INFORMATIONAL COPY ONLY

Section 8-12.3(2) is supplemented with the following:

Wire Fence Type Special:
The contractor shall install an 8' tall wire fence, similar to the existing fence, utilizing 12' x 6" round treated posts on 10 foot centers, between station 28+50 and station 40+15, as shown on sheet #3 of the contract plans. All costs associated with purchasing and install the fence shall be included in bid item #20 Wire Fence Type Special.

MONUMENT

Construction Requirements

(*****)
Section 8-1.3 is supplemented with the following:

All work shall be performed by a licensed surveyor.

The Contractor shall provide the Engineer GPS coordinates on all monuments set or reset.

The Contractor shall be required to set or reset monuments and monument covers at right of way points of intersection, curvature, and tangency within the project limits and as shown on the plans. Pursuant to RCW 58.24.040(8), a permit to remove or destroy a survey monument shall be acquired from the Washington State Dept. of Natural Resources for all existing survey monuments and markers.

Payment.

(******)
The unit contract price bid per each for "Monuments" shall be full compensation for performing the work outlined herein and in accordance with the plans and specifications.

DIVISION 9 MATERIALS

AGGREGATES

Aggregates for Ballast and Crushed Surfacing

Crushed Surfacing & Maintenance Rock
Section 9-03.9(3) and 9-03.9(4) are supplemented with the following

(******)

Sieve Size	Base Course Percent Passing	Maintenance Rock Percent Passing
1 – 1/4" square	100	
5/8" square	50 – 80	
1/2" square	-	100
1/4" square	30 – 50	55 – 70
US No. 40	5 – 18	10 – 25
US No. 200	3 – 7.5	3 – 7

INFORMATIONAL COPY ONLY

Fracture	75% min.	75% min.
Sand Equivalent	35% min.	40% min.

EROSION CONTROL AND ROADSIDE PLANTING

Seed

Section 9-14.2 is supplemented with the following:

(******)

The following arid area seed mixes are approved for use on this project. The Contractor shall choose one of the approved arid area mixes for application on this project.

Kind and variety of Seed in mixture	% By Weight	Minimum % Pure Seed	Minimum % Germination
Arid Area Mix A Containing*:			
Sherman Big Bluegrass	10	9.5	70
Crested Wheatgrass	30	28.5	85
Schwindamer Thickspike	30	28.5	85
Slender Wheatgrass	30	28.0	85
Weed Seed		2.0 (max)	
Inert and other crop		3.5 (max)	
Total		100.0	
Arid Area Mix B Containing **:			
Sheep Fescue	30	28.5	85
Crested Wheatgrass	30	28.5	85
Intermediate Wheatgrass	30	28.0	85
Annual Ryegrass	10	9.5	85
Weed Seed		2.0 (max)	
Inert and other crop		3.5 (max)	
Total		100.0	

*Arid area mix A shall be applied at the rate of eighteen (18) pounds per acre on all areas requiring arid area mix seeding within the project limits.

**Arid area mix B shall be applied at the rate of thirty (30) pounds per acre on all areas requiring arid area mix seeding within the project limits.

Fertilizer

Section 9-14.3 is supplemented with the following:

(******)

Sufficient quantities of fertilizer shall be applied to supply the following amounts of nutrients:

Total Nitrogen as N -	135 pounds per acre
Available Phosphoric Acid as P_2O_5 -	80 pounds per acre
Soluable Potash as K2O -	80 pounds per acre

INFORMATIONAL COPY ONLY

Ninety pounds of nitrogen applied per acre shall be derived from isobutylidene dilurea (IBDU), cyclo-di-urea (CDU), or sulphur coated urea (SCU). The reminder may be derived from any source.

The fertilizer formulation and application rate shall be approved by the Engineer before use.

STANDARD PLANS

April 2, 2012

The State of Washington Standard Plans for Road, Bridge and Municipal Construction M21-01 transmitted under Publications Transmittal No. PT 08-001, effective April 2, 2012 is made a part of this contract.

INFORMATIONAL COPY ONLY

1
2
3
4

INFORMATIONAL COPY ONLY

PROPOSAL

To: Board of County Commissioners
Grant County, Washington

Date:_____, 2012

This certifies that the undersigned has examined the location of **NEVA LAKE Road, CRP 10-06, in Grant County, Washington,** and that the plans, specifications and contract governing the work embraced in the improvement and the method by which payment will be made for said work is understood. The undersigned hereby proposes to undertake and complete the work embraced in this improvement, or as much thereof as can be completed with the money available in accordance with said plans, specifications and contract and at the following schedule of rates and prices.

NEVA LAKE Road

Note: Unit prices for all items, all extensions, and total amount must be shown. Please type or use ink. Please initial all changes.

Item No.	Plan Quantity	Item Description	Price per Unit* Dollars . Cents	Total Amount Dollars . Cents

NEVA LAKE Road

PREPARATION

1	100% Lump Sum	Mobilization	At ////////.///// Per Lump Sum	.
2	100% Lump Sum	Clearing and Grubbing	At ////////.///// Per Lump Sum	.

GRADING

3	10,976 Cu. Yd.	Roadway Excavation including Haul	At . Per Cubic Yard	.
4	6,747 Cu. Yd.	Embankment Compaction	At . Per Cubic Yard	.
5	7,500 Cu. Yd.	Borrow Excavation Incl. Haul	At . Per Cubic Yard	.
6	1,500 Cu. Yd.	Contaminated/Saturated Soil Excavation including Haul	At . Per Cubic Yard	.

INFORMATIONAL COPY ONLY

Item No.	Plan Quantity	Item Description	Price per Unit* Dollars . Cents	Total Amount Dollars . Cents
DRAINAGE				
7	210 L.F.	Plain Steel Culvert Pipe 0.064" Th. – 12" Diameter	At . Per Linear Foot	.
SURFACING				
8	4,200 Ton	Crushed Surfacing Base Course from Stockpile #558	At . Per Ton	.
9	2,700 Ton	Maintenance Rock from Stockpile #558	At . Per Ton	.
ASPHALT CONCRETE PAVEMENT				
10	1,800 Ton	HMA Class ½" Incl. PG64-28 Paving Asphalt	At . Per Ton	.
OTHER ITEMS				
11	2,650 L.F.	Painted Double Yellow Line	At . Per Linear Foot	.
12	5,300 L.F.	Painted Edge Line	At ////////.///// Per Linear Foot	.
OTHER ITEMS				
13	100% Lump Sum	Spill Prevention, Control and Countermeasure (SPCC) Plan	At . Per Lump Sum	.
14	20 Cu. Yd.	Structure Excavation Class "B" Including Haul	At ////////.///// Per Cubic Yard	.
15	30 Cu. Yd.	Gravel Backfill For Pipe Zone Bedding	At . Per Cubic yard	.

INFORMATIONAL COPY ONLY

Item No.	Plan Quantity	Item Description	Price per Unit* Dollars . Cents	Total Amount Dollars . Cents
16	5 Each	Monument	At . Per Each	.
17	100% Lump Sum	Trimming and Cleanup	At ////////.///// Per Lump Sum	.
18	1.0 Acre	Seeding, Fertilizing and Mulching with Arid Mix A or B	At . Per Acre	.
19	1,295 L.F.	Wire Fence Type 2	At . Per Linear Foot	.
20	1,275 L.F.	Wire Fence Type Special	At . Per Linear Foot	.
21	Calculated	Minor Changes	At ////////.///// Calculated	-$1.00

ALTERNATE A1

GRADING

22	4,500 Cu. Yd.	Contaminated Soil Excavation and Haul to Landfill	At . Per Cubic Yard	.

ALTERNATE A2

GRADING

23	4,500 Cu. Yd.	Contaminated Soil Excavation and Haul to Stockpile	At . Per Cubic Yard	

Base Bid Plus Alternate A1 & A2 Contract Total	.

INFORMATIONAL COPY ONLY

Non-Collusion Declaration

I, by signing the proposal, hereby declare, under penalty of perjury under the laws of the United States that the following statements are true and correct:

1. That the undersigned person(s), firm, association, or corporation has (have) not, either directly or indirectly, entered into any agreement, participated in any collusion, or otherwise taken any action in restraint of free competitive bidding in connection with the project for which this proposal is submitted.

2. **That by signing the signature page of this proposal, I am deemed to have signed and have agreed to the provisions of this declaration.**

Notice to All Bidders

To report bid rigging activities call:

1-800-424-9071

The U.S. Department of Transportation (USDOT) operates the above toll-free "hotline" Monday through Friday, 8:00 a.m. to 5:00 p.m., Eastern Time. Anyone with knowledge of possible bid rigging, bidder collusion, or other fraudulent activities should use the "hotline" to report such activities.

The "hotline" is part of USDOT's continuing effort to identify and investigate highway construction contract fraud and abuse and is operated under the direction of the USDOT Inspector General. All information will be treated confidentially and caller anonymity will be respected.

Revised 8/95

INFORMATIONAL COPY ONLY

Proposal – Signature Page

The bidder is hereby advised that by signature of this proposal he/she is deemed to have acknowledged all requirements and signed all certificates contained herein.

A proposal guaranty in an amount of five percent (5%) of the total bid, based upon the approximate estimate of quantities at the above prices and in the form as indicated below, is attached hereto:

Cash	☐	In the Amount of _____
Cashier's Check	☐	_____ Dollars
Certified Check	☐	($_____) Payable to the Grant County Treasurer
Proposal Bond	☐	In the Amount of 5% of the Bid

Receipt is hereby acknowledged of addendum(s) No.(s) ____, ____ & ____.

Signature of Authorized Official(s)

Proposal Must Be Signed →

_____

_____
Please Print Name of Authorized Official

Firm Name _____

Address _____

_____

_____

State of Washington Contractor's License No. _____

Federal ID No. _____

Note:

(1) This proposal form is not transferable and any alteration entered hereon without prior permission from the County Engineer will be cause for considering the proposal irregular and subsequent rejection of bid.

(2) Please refer to section 1-02.6 of the standard specifications, re:"Preparation of Proposal" or "Article 4" of the instructions to bidders for building construction jobs.

(3) Should it be necessary to modify this proposal either in writing or by electronic means, please make reference to the following proposal number in your communication: _____

_____
Revised 8/95

INFORMATIONAL COPY ONLY

Statement of Contractor Qualifications

To: Board of County Commissioners
Grant County, Washington

Date: _____, 2012

RE: **NEVA LAKE Road, CRP 10-06**

I hereby maintain that I am a responsible bidder as contemplated by the policies of the State of Washington and Chapter 36.77 of the Revised Code of Washington.

1. My permanent business name and address is _____ which I have maintained for ____ years. My phone is (____)_____ Fax (____)_____
2. I have adequate plant equipment to expeditiously and properly perform the work contemplated for Grant County, Washington. **Description of work:** This contract provides for the construction of 0.50 miles of a county road in Grant County, WA, and includes roadway excavation, embankment compaction, crushed surfacing base course, maintenance rock, drainage items, hot mix asphalt, monuments, seeding, fertilizing, mulching and other work all in accordance with the attached Contract Plans, these Contract Provisions and the Standard Specifications. (Please list equipment to be used on this project. Attach list if necessary.)

   _____
   _____
   _____
3. I have adequate funds to promptly meet obligations incident to this work. (Provide bank, contact & phone.) a) _____
   b) _____ c) _____
4. I have adequate experience in this class of work and I am thoroughly familiar with the specifications used in this project. I have constructed the following similar improvements: (Provide project name, contact & phone.)
   a) _____
   b) _____
   c) _____
5. I have submitted and maintain annually a "Standard Questionnaire and Financial Statement" to the Washington State Department of Transportation (WSDOT): Yes ☐ No ☐ Region: _____
   WSDOT has determined: a) I am prequalified to _____
   _____ in the amount of _____.__
   b) I have failed to be prequalified for the following reasons: ___
   _____.

   The Contracting Agency may determine a prospective Bidder who is not prequalified to perform certain types of work within the financial and experience constraints determined by WSDOT to be not responsible and refuse to award a contract.
   The Board of County Commissioners shall proceed to award the contract to the lowest and best bidder but may reject any or all bids if in its opinion good cause exists therefor. (RCW 36.77.040)

I hereby certify that the above statements are true and accurate.

Very truly yours,

By: _____
(Print Name) _____
Company Name: _____
Address: _____
City, State, Zip: _____
Washington State Contractor's License No.: _____

Revised 4/02

INFORMATIONAL COPY ONLY

Bid Bond

KNOW ALL MEN BY THESE PRESENTS:

That we, _____, as Principal, and _____, as Surety, are held and firmly bound unto Grant County, Washington, as Obligee, in the penal sum of _____ Dollars ($_____) for the payment of which the Principal and Surety bind themselves, their heirs, executors, administrators, successors and assigns, jointly and severally, by these presents.

The condition of the obligation is such that if the Obligee shall make any award to the Principal for **NEVA LAKE Road, CRP 10-06,** located in Grant County, Washington, according to the terms of the proposal or bid made by the Principal therefor, and the Principal shall duly make and enter into a contract with the Obligee in accordance with the terms of said proposal or bid and award and shall give bond for the faithful performance thereof, with the Surety or Sureties approved by the Obligee; or if the principal shall, in case of failure so to do, pay and forfeit to the Obligee the penal amount of the deposit specified in the call for bids, then this obligation shall be null and void; otherwise it shall be and remain in full force and effect and the Surety shall forthwith pay and forfeit to the Obligee, as penalty and liquidated damages, the amount of this bond.

SIGNED, SEALED AND DATED THIS ____ DAY OF _____ , 2012

Principal _____

Surety _____

Attorney-in-Fact _____

INFORMATIONAL COPY ONLY

INFORMATIONAL COPY ONLY

CONTRACT

THIS AGREEMENT, between the Board of County Commissioners of Grant County, State of Washington, acting under and by virtue of Chapter 36.77 of the Revised Code of Washington, as amended, hereinafter called the County, and _____, for itself, its heirs, executors, administrators, successors and assigns, hereinafter called the Contractor.

WITNESSETH:

That in consideration of the payments, covenants, and agreements, hereinafter mentioned, and attached and made a part of this agreement, to be made and performed by the parties hereto, and the parties hereto covenant and agree as follows:

DESCRIPTION OF WORK:

1. The Contractor shall do all work and furnish all tools, materials, and equipment necessary to improve and complete **NEVA LAKE Road, CRP 10-06,** located in Grant County, Washington, as proposed in a bid opened **1:30 P.M., Tuesday, August 28, 2012** in accordance with and as described in the herein attached plans and standard specifications, and in full compliance with the terms, conditions, and stipulations herein set forth and attached, now referred to any by such reference incorporated herein and made part hereof as fully for all purposes as if here set forth at length, and shall perform any alterations in or additions to the work covered by this contract and every part thereof and any force account work may be ordered as provided in this contract and every part thereof.

2. The Contractor shall provide and be at the expense of all materials, labor, carriage, tools, implements and conveniences and things of every description that may be requisite for the transfer of materials and for constructing and completing the work provided for in this contract and every part thereof.

3. The County hereby promises and agrees with the Contractor to employ, and does employ the Contractor to provide the materials and to do and cause to be done the above described work and to complete and finish the same according to the attached plans and specifications and the terms and conditions herein contained, and hereby contracts to pay for the same according to the attached specifications and the schedule of unit or itemized prices hereto attached, at the time and in the manner and upon the conditions provided for in this contract and every part thereof. The County further agrees to employ the Contractor to perform any alterations in or additions to the work covered by this contract and every part thereof and any force account work that may be ordered and pay for same under the terms of this contract and the attached plans and specifications.

4. The Contractor for himself, and for his heirs, executors, administrators and assigns, and successors and assigns, does hereby agree to the full performance of all the covenants herein contained upon the part of the Contractor.

5. It is further provided that no liability shall attach to the County by reason of entering into this contract, except as expressly provided herein.

INFORMATIONAL COPY ONLY

IN WITNESS WHEREOF, the said Contractor has executed this instrument, and the said Board of County Commissioners of Grant County has caused this instrument to be executed by and in the name of said Board by its Members, duly attested by its Clerk, the day and year below written, and the seal of said Board to be hereunto affixed on said date.

____day of _____, 2012

_____
Signature

_____
Print Name

_____
Firm Name

_____
Address

_____
City State Zip

(____)_____
Phone

ATTEST:

_____
Clerk of the Board

APPROVED AS TO FORM:

____day of _____,2012

_____
Deputy Prosecuting Attorney

BOARD OF COUNTY COMMISSIONERS
OF GRANT COUNTY, WASHINGTON

Done this ____ day of _____, 2012

_____
Chair

_____
Member

_____
Member

INFORMATIONAL COPY ONLY

CONTRACT BOND

KNOW ALL MEN BY THESE PRESENTS:

That we, the undersigned, _____, as principal, and _____, a corporation organized and existing under the laws of the State of _____, as surety corporation, and qualified under the laws of the State of Washington to become surety upon bonds of contractors with municipal corporations, as surety, are jointly and severally held and firmly bound to Grant County, Washington, in the penal sum of _____ ($_____) for the payment of which sum on demand we bind ourselves and our successors, heirs, administrators or personal representatives, as the case may be.

This obligation is entered into in pursuance of the statutes of the State of Washington, the Ordinances of Grant County, Washington.

Dated at _____, Washington, this ____ day of _____, 2012.

The conditions of the above obligation are such that:

WHEREAS, on **August 28, 2012**, the Board of County Commissioners of said Grant County has let or is about to let to the Principal, a certain contract, the said contract providing for the improvement of **NEVA LAKE Road, CRP 10-06,** located in Grant County, Washington, (which contract is referred to herein and is made a part hereof as though attached hereto), and

WHEREAS, the said Principal has accepted, or is about to accept, the said contract, and undertake to perform the work therein provided for in the manner and within the time set forth;

NOW, THEREFORE, if the said Principal shall faithfully perform all of the provisions of said contract in the manner and within the time therein set forth or within such extensions of time as may be granted under said contract, and shall pay all laborers, mechanics, subcontractors and material men, and all persons who shall supply said Principal or subcontractors with provisions and supplies for the carrying on of said work, and shall hold said Grant County harmless from any loss or damage occasioned to any person or property by reason of any carelessness or negligence on the part of said Principal, or any subcontractor in the performance of said work and shall indemnify and hold Grant County harmless from any damage or expense by reason of failure of performance as specified in said contract or from defects appearing or developing in the material or workmanship provided or performed under said contract, and until the same is accepted, then and in that event this obligation shall be void but otherwise it shall be and remain in full force and effect.

Countersigned:

_____
Licensed Agent/Surety Co.

_____
Principal

_____

_____
Attorney-in-Fact, Surety

_____

Approved as to form:

(_____)_____
Firm, Street Address (No P.O. Box), Phone of Local Office of Agent

_____, 2012

_____
Deputy Prosecuting Attorney

INFORMATIONAL COPY ONLY

INFORMATIONAL COPY ONLY

TITLE VI – Contractor Requirements

During the performance of this contract, the contractor/consultant, for itself, its assignees and successors in interest (hereinafter referred to as the "contractor") agrees as follows:

1. Compliance with Regulations

The contractor shall comply with the Regulations relative to non-discrimination in federally assisted programs of United States Department of Transportation (USDOT), Title 49, Code of Federal Regulations, part 21, as they may be amended from time to time, (hereinafter referred to as the Regulations), which are herein incorporated by reference and made a part of this contract.

2. Non-discrimination

The contractor, with regard to the work performed by it during the contract, shall not discriminate on the grounds of race, color, sex, or national origin in the selection and retention of sub-contractors, including procurement of materials and leases of equipment. The contractor shall not participate either directly or indirectly in the discrimination prohibited by Section 21.5 of the Regulations, including employment practices when the contract covers a program set forth in Appendix B of the Regulations.

3. Solicitations for Sub-contracts, Including Procurement of Materials and Equipment

In all solicitations either by competitive bidding or negotiations made by the contractor for work to be performed under a sub-contract, including procurement of materials or leases of equipment, each potential sub-contractor or supplier shall be notified by the contractor of the contractor's obligations under this contract and the Regulations relative to non-discrimination on the grounds of race, color, sex, or national origin.

4. Information and Reports

The contractor shall provide all information and reports required by the Regulations or directives issued pursuant thereto, and shall permit access to its books, records, accounts, other sources of information, and its facilities as may be determined by the contracting agency or the appropriate federal agency to be pertinent to ascertain compliance with such Regulations, orders and instructions. Where any information required of a contractor is in the exclusive possession of another who fails or refuses to furnish this information, the contractor shall so certify to WSDOT or the USDOT as appropriate, and shall set forth what efforts it has made to obtain the information.

5. Sanctions for Non-compliance

In the event of the contractor's non-compliance with the non-discrimination provisions of this contract, the contracting agency shall impose such contract sanctions as it or the USDOT may determine to be appropriate, including, but not limited to:

- Withholding of payments to the contractor under the contract until the contractor complies, and/or;
- Cancellation, termination, or suspension of the contract, in whole or in part

6. Incorporation of Provisions

The contractor shall include the provisions of paragraphs (1) through (5) in every sub-contract, including procurement of materials and leases of equipment, unless exempt by the Regulations, or directives issued pursuant thereto. The contractor shall take such action with respect to any sub-contractor or procurement as the contracting agency or USDOT may direct as a means of enforcing such provisions including sanctions for non-compliance.

Provided, however, that in the event a contractor becomes involved in, or is threatened with, litigation with a sub-contractor or supplier as a result of such direction, the contractor may request WSDOT enter into such litigation to protect the interests of the state and, in addition, the contractor may request the USDOT enter into such litigation to protect the interests of the United States.

INFORMATIONAL COPY ONLY

INFORMATIONAL COPY ONLY

INFORMATIONAL COPY ONLY

State of Washington
Department of Labor & Industries

Prevailing Wage Section - Telephone 360-902-5335
PO Box 44540, Olympia, WA 98504-4540

Washington State Prevailing Wage

The PREVAILING WAGES listed here include both the hourly wage rate and the hourly rate of fringe benefits. On public works projects, worker's wage and benefit rates must add to not less than this total. A brief description of overtime calculation requirements are provided on the Benefit Code Key.

INFORMATIONAL COPY ONLY

Journey Level Prevailing Wage Rates for the Effective Date: 8/8/2012

County	Trade	Job Classification	Wage	Holiday	Overtime	Note
Grant	Flaggers	Journey Level	$31.31	7B	1M	
Grant	Laborers	Air And Hydraulic Track Drill	$33.95	7B	1M	
Grant	Laborers	Asphalt Rake	$33.95	7B	1M	
Grant	Laborers	Asphalt Roller, Walking	$33.68	7B	1M	
Grant	Laborers	Brick Pavers	$33.41	7B	1M	
Grant	Laborers	Brush Hog Feeder	$33.41	7B	1M	
Grant	Laborers	Brush Machine	$33.95	7B	1M	
Grant	Laborers	Caisson Worker, Free Air	$33.95	7B	1M	
Grant	Laborers	Carpenter Tender	$33.41	7B	1M	
Grant	Laborers	Cement Finisher Tender	$33.68	7B	1M	
Grant	Laborers	Cement Handler	$33.41	7B	1M	
Grant	Laborers	Chain Saw Operator & Faller	$33.95	7B	1M	
Grant	Laborers	Clean-up Laborer	$33.41	7B	1M	
Grant	Laborers	Compaction Equipment	$33.68	7B	1M	
Grant	Laborers	Concrete Crewman	$33.41	7B	1M	
Grant	Laborers	Concrete Saw, Walking	$33.68	7B	1M	
Grant	Laborers	Concrete Signalman	$33.41	7B	1M	
Grant	Laborers	Concrete Stack	$33.95	7B	1M	
Grant	Laborers	Confined Space Attendant	$33.41	7B	1M	
Grant	Laborers	Crusher Feeder	$33.41	7B	1M	
Grant	Laborers	Demolition	$33.41	7B	1M	
Grant	Laborers	Demolition Torch	$33.68	7B	1M	
Grant	Laborers	Dope Pot Fireman, Non-mechanical	$33.68	7B	1M	

Grant	Laborers	Driller Helper (when Required To Move & Position Machine)	$33.68	7B	1M	
Grant	Laborers	Drills With Dual Masts	$34.23	7B	1M	
Grant	Laborers	Dry Stack Walls	$33.41	7B	1M	
Grant	Laborers	Dumpman	$33.41	7B	1M	
Grant	Laborers	Erosion Control Laborer	$33.41	7B	1M	
Grant	Laborers	Final Detail Cleanup (i.e., Dusting, Vacuuming, Window Cleaning; Not Construction Debris Cleanup)	$31.31	7B	1M	
Grant	Laborers	Firewatch	$33.41	7B	1M	
Grant	Laborers	Form Cleaning Machine Feeder, Stacker	$33.41	7B	1M	
Grant	Laborers	Form Setter, Paving	$33.68	7B	1M	
Grant	Laborers	General Laborer	$33.41	7B	1M	
Grant	Laborers	Grade Checker	$35.94	7B	1M	
Grant	Laborers	Grout Machine Header Tender	$33.41	7B	1M	
Grant	Laborers	Guard Rail	$33.41	7B	1M	
Grant	Laborers	Gunite	$33.95	7B	1M	
Grant	Laborers	Hazardous Waste Worker (level A)	$34.23	7B	1M	
Grant	Laborers	Hazardous Waste Worker (level B)	$33.95	7B	1M	
Grant	Laborers	Hazardous Waste Worker (level C)	$33.68	7B	1M	
Grant	Laborers	Hazardous Waste Worker (level D)	$33.41	7B	1M	
Grant	Laborers	Hdpe Or Similar Liner Installer	$33.41	7B	1M	
Grant	Laborers	High Scaler	$33.95	7B	1M	
Grant	Laborers	Jackhammer Operator Miner, Class "b"	$33.68	7B	1M	
Grant	Laborers	Laser Beam Operator	$33.95	7B	1M	
Grant	Laborers	Miner, Class "a"	$33.41	7B	1M	
Grant	Laborers	Miner, Class "c"	$33.95	7B	1M	
Grant	Laborers	Miner, Class "d"	$34.23	7B	1M	
Grant	Laborers	Monitor Operator, Air Track Or Similar Mounting	$33.95	7B	1M	
Grant	Laborers	Mortar Mixer	$33.95	7B	1M	
Grant	Laborers	Nipper	$33.41	7B	1M	
Grant	Laborers	Nozzleman	$33.95	7B	1M	
Grant	Laborers	Nozzleman, Water (to Include Fire Hose), Air Or Steam	$33.68	7B	1M	

INFORMATIONAL COPY ONLY

Grant	Laborers	Pavement Breaker, 90 Lbs. & Over	$33.95	7B	1M	
Grant	Laborers	Pavement Breaker, Under 90 Lbs.	$33.68	7B	1M	
Grant	Laborers	Pipelayer	$33.95	7B	1M	
Grant	Laborers	Pipelayer, Corrugated Metal Culvert And Multi-plate	$33.68	7B	1M	
Grant	Laborers	Pipewrapper	$33.95	7B	1M	
Grant	Laborers	Plasterer Tenders	$33.95	7B	1M	
Grant	Laborers	Pot Tender	$33.68	7B	1M	
Grant	Laborers	Powderman	$35.60	7B	1M	
Grant	Laborers	Powderman Helper	$33.68	7B	1M	
Grant	Laborers	Power Buggy Operator	$33.68	7B	1M	
Grant	Laborers	Power Tool Operator, Gas, Electric, Pneumatic	$33.68	7B	1M	
Grant	Laborers	Railroad Equipment, Power Driven, Except Dual Mobile	$33.68	7B	1M	
Grant	Laborers	Railroad Power Spiker Or Puller, Dual Mobile	$33.68	7B	1M	
Grant	Laborers	Remote Equipment Operator	$34.23	7B	1M	
Grant	Laborers	Remote Equipment Operator (i.e. Compaction And Demolition)	$33.68	7B	1M	
Grant	Laborers	Rigger/signal Person	$33.68	7B	1M	
Grant	Laborers	Riprap Person	$33.41	7B	1M	
Grant	Laborers	Rodder & Spreader	$33.68	7B	1M	
Grant	Laborers	Sandblast Tailhoseman	$33.41	7B	1M	
Grant	Laborers	Scaffold Erector, Wood Or Steel	$33.41	7B	1M	
Grant	Laborers	Stake Jumper	$33.41	7B	1M	
Grant	Laborers	Structural Mover	$33.41	7B	1M	
Grant	Laborers	Tailhoseman (water Nozzle)	$33.41	7B	1M	
Grant	Laborers	Timber Bucker & Faller (by Hand)	$33.41	7B	1M	
Grant	Laborers	Track Laborer (rr)	$33.41	7B	1M	
Grant	Laborers	Trencher, Shawnee	$33.68	7B	1M	
Grant	Laborers	Trenchless Technology Technician	$33.95	7B	1M	
Grant	Laborers	Truck Loader	$33.41	7B	1M	
Grant	Laborers	Tugger Operator	$33.68	7B	1M	
Grant	Laborers	Vibrators, All	$33.95	7B	1M	
Grant	Laborers	Wagon Drills	$33.68	7B	1M	
Grant	Laborers	Water Pipe Liner	$33.68	7B	1M	

INFORMATIONAL COPY ONLY

Grant	Laborers	Welder, Electric, Manual Or Automatic (hdpe Or Similar Pipe And Liner)	$34.23	7B	1M	
Grant	Laborers	Well-point Person	$33.41	7B	1M	
Grant	Laborers	Wheelbarrow, Power Driven	$33.68	7B	1M	
Grant	Power Equipment Operators	A-frame Truck (2 Or More Drums)	$37.74	7B	1M	8D
Grant	Power Equipment Operators	A-frame Truck (single Drum)	$37.13	7B	1M	8D
Grant	Power Equipment Operators	Asphalt Plant Operator	$38.34	7B	1M	8D
Grant	Power Equipment Operators	Assistant Plant Operator, Fireman Or Pugmixer (asphalt)	$37.13	7B	1M	8D
Grant	Power Equipment Operators	Assistant Refrigeration Plant & Chiller Operator (over 1000 Ton)	$37.74	7B	1M	8D
Grant	Power Equipment Operators	Assistant Refrigeration Plant (under 1000 Ton)	$37.13	7B	1M	8D
Grant	Power Equipment Operators	Automatic Subgrader (ditches & Trimmers)	$38.34	7B	1M	8D
Grant	Power Equipment Operators	Backfillers (cleveland & Similar)	$37.74	7B	1M	8D
Grant	Power Equipment Operators	Backhoe & Hoe Ram (under 3/4 Yd.)	$38.06	7B	1M	8D
Grant	Power Equipment Operators	Backhoe (45,000 Gw & Under)	$38.06	7B	1M	8D
Grant	Power Equipment Operators	Backhoe (45,000 Gw To 110,000 Gw)	$38.34	7B	1M	8D
Grant	Power Equipment Operators	Backhoe (over 110,000 Gw)	$38.61	7B	1M	8D
Grant	Power Equipment Operators	Backhoes & Hoe Ram (3 Yds & Over)	$38.61	7B	1M	8D
Grant	Power Equipment Operators	Backhoes & Hoe Ram (3/4 Yd. To 3 Yd.)	$38.34	7B	1M	8D
Grant	Power Equipment Operators	Bagley Or Stationary Scraper	$37.13	7B	1M	8D
Grant	Power Equipment Operators	Batch & Wet Mix Operator (multiple Units, 2 & Incl. 4)	$38.34	7B	1M	8D
Grant	Power Equipment Operators	Batch Plant & Wet Mix Operator, Single Unit (concrete)	$37.74	7B	1M	8D
Grant	Power Equipment Operators	Batch Plant (over 4 Units)	$38.34	7B	1M	8D
Grant	Power Equipment Operators	Belt Finishing Machine	$37.13	7B	1M	8D
Grant	Power Equipment Operators	Belt Loader (kocal Or Similar)	$37.74	7B	1M	8D
Grant	Power Equipment Operators	Belt-crete Conveyors With Power Pack Or Similar	$37.74	7B	1M	8D
Grant	Power Equipment Operators	Bending Machine	$37.74	7B	1M	8D
Grant	Power Equipment Operators	Bit Grinders	$36.81	7B	1M	8D
Grant	Power Equipment Operators	Blade (finish & Bluetop), Automatic, Cmi, Abc, Finish	$38.61	7B	1M	8D

INFORMATIONAL COPY ONLY

		Athey & Huber & Similar When Used As Automatic				
Grant	Power Equipment Operators	Blade Operator (motor Patrol & Attachments)	$38.34	7B	1M	8D
Grant	Power Equipment Operators	Blower Operator (cement)	$37.13	7B	1M	8D
Grant	Power Equipment Operators	Boat Operator	$36.81	7B	1M	8D
Grant	Power Equipment Operators	Bob Cat (skid Steer)	$37.74	7B	1M	8D
Grant	Power Equipment Operators	Bolt Threading Machine	$36.81	7B	1M	8D
Grant	Power Equipment Operators	Boom Cats (side)	$38.34	7B	1M	8D
Grant	Power Equipment Operators	Boring Machine (earth)	$37.74	7B	1M	8D
Grant	Power Equipment Operators	Boring Machine (rock Under 8" Bit) (quarry Master, Joy Or Similar)	$37.74	7B	1M	8D
Grant	Power Equipment Operators	Bump Cutter (wayne, Saginau Or Similar)	$37.74	7B	1M	8D
Grant	Power Equipment Operators	Cableway Controller (dispatcher)	$38.34	7B	1M	8D
Grant	Power Equipment Operators	Cableway Operators	$38.61	7B	1M	8D
Grant	Power Equipment Operators	Canal Lining Machine (concrete)	$37.74	7B	1M	8D
Grant	Power Equipment Operators	Carryduck & Boom Truck (under 25 Tons)	$38.06	7B	1M	8D
Grant	Power Equipment Operators	Cement Hog	$37.13	7B	1M	8D
Grant	Power Equipment Operators	Chipper (without Crane) Cleaning & Doping Machine (pipeline)	$37.74	7B	1M	8D
Grant	Power Equipment Operators	Clamshell, Dragline	$39.71	7B	1M	8D
Grant	Power Equipment Operators	Compactor (self-propelled With Blade)	$38.34	7B	1M	8D
Grant	Power Equipment Operators	Compressor (2000 Cfm Or Over, 2 Or More, Gas Diesel Or Electric Power)	$37.1[illegible]	7[illegible]	1M	8D
Grant	Power Equipment Operators	Compressors (under 2000 Cfm, Gas, Diesel Or Electric Power)	$36.81	7B	1M	8D
Grant	Power Equipment Operators	Concrete Cleaning / Decontamination Machine Operator	$38.61	7B	1M	8D
Grant	Power Equipment Operators	Concrete Pump Boon Truck	$38.34	7B	1M	8D
Grant	Power Equipment Operators	Concrete Pumps (squeeze-crete, Flow-crete, Whitman & Similar)	$37.90	7B	1M	8D
Grant	Power Equipment Operators	Concrete Saw (multiple Cut)	$37.13	7B	1M	8D
Grant	Power Equipment Operators	Concrete Slip Form Paver	$38.34	7B	1M	8D

INFORMATIONAL COPY ONLY

Grant	Power Equipment Operators	Conveyor Aggregate Delivery Systems (c.a.d.)	$38.34	7B	1M	8D
Grant	Power Equipment Operators	Crane Oiler- Driver (cdl Required) & Cable Tender, Mucking Machine	$36.81	7B	1M	8D
Grant	Power Equipment Operators	Cranes (25 Tons & Under), All Attachments Incl. Clamshell, Dragline	$38.06	7B	1M	8D
Grant	Power Equipment Operators	Cranes (25 Tons To And Including 45 Tons), All Attachments Incl. Clamshell, Dragline	$38.34	7B	1M	8D
Grant	Power Equipment Operators	Cranes (45 Tons To 85 Tons), All Attachments Incl. Clamshell And Dragline	$38.61	7B	1M	8D
Grant	Power Equipment Operators	Cranes (85 Tons & Over) And All Climbing, Overhead, Rail & Tower All Attachments Incl.	$39.71	7B	1M	8D
Grant	Power Equipment Operators	Crusher Feeder	$36.81	7B	1M	8D
Grant	Power Equipment Operators	Crusher, Grizzly & Screening Plant Operator	$38.34	7B	1M	8D
Grant	Power Equipment Operators	Curb Extruder (asphalt Or Concrete)	$37.90	7B	1M	8D
Grant	Power Equipment Operators	Deck Engineer	$37.74	7B	1M	8D
Grant	Power Equipment Operators	Deck Hand	$36.81	7B	1M	8D
Grant	Power Equipment Operators	Derricks & Stifflegs (65 Tons & Over)	$38.61	7B	1M	8D
Grant	Power Equipment Operators	Derricks & Stifflegs (under 65 Tons)	$38.06	7B	1M	8D
Grant	Power Equipment Operators	Distributor Leverman	$37.13	7B	1M	8D
Grant	Power Equipment Operators	Ditch Witch Or Similar	$37.13	7B	1M	8D
Grant	Power Equipment Operators	Dope Pots (power Agitated	$37.13	7B	1M	8D
Grant	Power Equipment Operators	Dozer / Tractor (up To D-6 Or Equivalent) And Traxcavator	$37.74	7B	1M	8D
Grant	Power Equipment Operators	Dozer / Tractors (d-6 & Equivalent & Over)	$38.34	7B	1M	8D
Grant	Power Equipment Operators	Dozer, 834 R/t & Similar	$38.34	7B	1M	8D
Grant	Power Equipment Operators	Drill Doctor	$38.34	7B	1M	8D
Grant	Power Equipment Operators	Driller Licensed	$39.71	7B	1M	8D
Grant	Power Equipment Operators	Drillers Helper	$36.81	7B	1M	8D
Grant	Power Equipment Operators	Drilling Equipment (8" Bit & Over) (robbins, Reverse	$38.06	7B	1M	8D

INFORMATIONAL COPY ONLY

		Circulation & Similar)				
Grant	Power Equipment Operators	Drills (churn, Core, Calyx Or Diamond)	$37.90	7B	1M	8D
Grant	Power Equipment Operators	Elevating Belt (holland Type)	$38.61	7B	1M	8D
Grant	Power Equipment Operators	Elevating Belt-type Loader (euclid, Barber Green & Similar)	$37.74	7B	1M	8D
Grant	Power Equipment Operators	Elevating Grader-type Loader (dumor, Adams Or Similar)	$37.74	7B	1M	8D
Grant	Power Equipment Operators	Elevator Hoisting Materials	$37.13	7B	1M	8D
Grant	Power Equipment Operators	Equipment Serviceman, Greaser & Oiler	$37.90	7B	1M	8D
Grant	Power Equipment Operators	Fireman & Heater Tender	$36.81	7B	1M	8D
Grant	Power Equipment Operators	Fork Lift Or Lumber Stacker, Hydra-life & Similar	$37.13	7B	1M	8D
Grant	Power Equipment Operators	Generator Plant Engineers (diesel Or Electric)	$37.74	7B	1M	8D
Grant	Power Equipment Operators	Gin Trucks (pipeline)	$37.13	7B	1M	8D
Grant	Power Equipment Operators	Grade Checker	$38.06	7B	1M	8D
Grant	Power Equipment Operators	Gunite Combination Mixer & Compressor	$37.74	7B	1M	8D
Grant	Power Equipment Operators	H.d. Mechanic	$38.61	7B	1M	8D
Grant	Power Equipment Operators	H.d. Welder	$38.61	7B	1M	8D
Grant	Power Equipment Operators	Helicopter Pilot	$39.71	7B	1M	8D
Grant	Power Equipment Operators	Helper, Mechanic Or Welder, H.D	$36.81	7B	1M	8D
Grant	Power Equipment Operators	Hoe Ram	$38.06	7B	1M	8D
Grant	Power Equipment Operators	Hoist (2 Or More Drums Or Tower Hoist)	$37.90	7B	1M	8D
Grant	Power Equipment Operators	Hoist, Single Drum	$37.13	7B	1M	8D
Grant	Power Equipment Operators	Hydraulic Platform Trailers (goldhofer, Shaurerly And Similar)	$38.61	7B	1M	8D
Grant	Power Equipment Operators	Hydro-seeder, Mulcher, Nozzleman	$36.81	7B	1M	8D
Grant	Power Equipment Operators	Lime Batch Tank Operator (recycle Train)	$38.34	7B	1M	8D
Grant	Power Equipment Operators	Lime Brain Operator (recycle Train)	$38.34	7B	1M	8D
Grant	Power Equipment Operators	Loader (360 Degrees Revolving Koehring Scooper Or Similar)	$38.61	7B	1M	8D
Grant	Power Equipment Operators	Loader Operator (front-end & Overhead, 4 Yds. Incl. 8 Yds.)	$38.34	7B	1M	8D

INFORMATIONAL COPY ONLY

Grant	Power Equipment Operators	Loaders (bucket Elevators And Conveyors)	$37.13	7B	1M	8D
Grant	Power Equipment Operators	Loaders (overhead & Front-end, Over 8 Yds. To 10 Yds.)	$38.61	7B	1M	8D
Grant	Power Equipment Operators	Loaders (overhead & Front-end, Under 4 Yds.. R/t)	$37.90	7B	1M	8D
Grant	Power Equipment Operators	Loaders (overhead And Front-end, 10 Yds. & Over)	$39.71	7B	1M	8D
Grant	Power Equipment Operators	Locomotive Engineer	$37.74	7B	1M	8D
Grant	Power Equipment Operators	Longitudinal Float	$37.13	7B	1M	8D
Grant	Power Equipment Operators	Master Environmental Maintenance Technician	$38.61	7B	1M	8D
Grant	Power Equipment Operators	Mixer (portable - Concrete)	$37.13	7B	1M	8D
Grant	Power Equipment Operators	Mixermobile	$37.74	7B	1M	8D
Grant	Power Equipment Operators	Mobile Crusher Operator (recycle Train)	$38.34	7B	1M	8D
Grant	Power Equipment Operators	Mucking Machine	$37.74	7B	1M	8D
Grant	Power Equipment Operators	Multiple Dozer Units With Single Blade	$38.34	7B	1M	8D
Grant	Power Equipment Operators	Pavement Breaker, Hydra-hammer & Similar	$37.13	7B	1M	8D
Grant	Power Equipment Operators	Paving (dual Drum)	$38.06	7B	1M	8D
Grant	Power Equipment Operators	Paving Machine (asphalt And Concrete)	$38.34	7B	1M	8D
Grant	Power Equipment Operators	Piledriving Engineers	$38.06	7B	1M	8D
Grant	Power Equipment Operators	Plant Oiler	$36.81	7B	1M	8D
Grant	Power Equipment Operators	Posthole Auger Or Punch	$37.74	7B	1M	8D
Grant	Power Equipment Operators	Power Broom	$37.13	7B	1M	8D
Grant	Power Equipment Operators	Pump (grout Or Jet)	$37.74	7B	1M	8D
Grant	Power Equipment Operators	Pumpman	$36.81	7B	1M	8D
Grant	Power Equipment Operators	Quad-track Or Similar Equipment	$38.34	7B	1M	8D
Grant	Power Equipment Operators	Railroad Ballast Regulation Operator (self-propelled)	$37.13	7B	1M	8D
Grant	Power Equipment Operators	Railroad Power Tamper Operator (self-propelled)	$37.13	7B	1M	8D
Grant	Power Equipment Operators	Railroad Tamper Jack Operator (self-propelled)	$37.13	7B	1M	8D

INFORMATIONAL COPY ONLY

Grant	Power Equipment Operators	Railroad Track Liner Operator (self-propelled)	$38.06	7B	1M	8D
Grant	Power Equipment Operators	Refrigeration Plant Engineer (1000 Tons & Over)	$38.06	7B	1M	8D
Grant	Power Equipment Operators	Refrigeration Plant Engineer (under 1000 Ton)	$37.90	7B	1M	8D
Grant	Power Equipment Operators	Rollerman (finishing Asphalt Pavement)	$38.34	7B	1M	8D
Grant	Power Equipment Operators	Rollers, All Types On Subgrade, Including Seal And Chip Coating (farm Type, Case, John Deere And Similar,or Compacting Vibrator), Except When Pulled B	$36.81	7B	1M	8D
Grant	Power Equipment Operators	Roto Mill (pavement Grinder)	$38.34	7B	1M	8D
Grant	Power Equipment Operators	Roto Mill Groundsman	$37.90	7B	1M	8D
Grant	Power Equipment Operators	Rubber-tired Scrapers (multiple Engine With Three Or More Scrapers)	$38.61	7B	1M	8D
Grant	Power Equipment Operators	Rubber-tired Skidders (r/t With Or Without Attachments)	$37.90	7B	1M	8D
Grant	Power Equipment Operators	Scrapers, All, Rubber-tired	$38.34	7B	1M	8D
Grant	Power Equipment Operators	Screed Operator	$38.34	7B	1M	8D
Grant	Power Equipment Operators	Shovels (3 Yds. & Over)	$38.61	7B	1M	8D
Grant	Power Equipment Operators	Shovels (under 3 Yds.)	$38.34	7B	1M	8D
Grant	Power Equipment Operators	Signalman (whirleys, Highline, Hammerheads Or Similar)	$38.06	7B	1M	8D
Grant	Power Equipment Operators	Soil Stabilizer (p & H Or Similar)	$37.74	7B	1M	8D
Grant	Power Equipment Operators	Spray Curing Machine (concrete)	$37.13	7B	1M	8D
Grant	Power Equipment Operators	Spreader Box (self-propelled)	$37.13	7B	1M	8D
Grant	Power Equipment Operators	Spreader Machine	$37.74	7B	1M	8D
Grant	Power Equipment Operators	Steam Cleaner	$36.81	7B	1M	8D
Grant	Power Equipment Operators	Straddle Buggy (ross & Similar On Construction Job Only)	$37.13	7B	1M	8D
Grant	Power Equipment Operators	Surface Heater & Planer Machine	$37.90	7B	1M	8D
Grant	Power Equipment Operators	Tractor (farm Type R/t With Attachments, Except Backhoe)	$37.13	7B	1M	8D
Grant	Power Equipment Operators	Traverse Finish Machine	$37.74	7B	1M	8D

INFORMATIONAL COPY ONLY

Grant	Power Equipment Operators	Trenching Machines (7 Ft. Depth & Over)	$38.34	7B	1M	8D
Grant	Power Equipment Operators	Trenching Machines (under 7 Ft. Depth Capacity)	$37.90	7B	1M	8D
Grant	Power Equipment Operators	Tug Boat Operator	$38.34	7B	1M	8D
Grant	Power Equipment Operators	Tugger Operator	$37.13	7B	1M	8D
Grant	Power Equipment Operators	Turnhead (with Re-screening)	$37.90	7B	1M	8D
Grant	Power Equipment Operators	Turnhead Operator	$37.74	7B	1M	8D
Grant	Power Equipment Operators	Ultra High Pressure Wateriet Cutting Tool System Operator, (30,000 Psi)	$38.61	7B	1M	8D
Grant	Power Equipment Operators	Vactor Guzzler, Super Sucker	$38.34	7B	1M	8D
Grant	Power Equipment Operators	Vacuum Blasting Machine Operator	$38.61	7B	1M	8D
Grant	Power Equipment Operators	Vacuum Drill (reverse Circulation Drill Under 8" Bit)	$37.90	7B	1M	8D
Grant	Power Equipment Operators	Welding Machine	$36.81	7B	1M	8D
Grant	Power Equipment Operators	Whirleys & Hammerheads, All	$38.61	7B	1M	8D
Grant	Truck Drivers	Dump Truck	$26.09		1	
Grant	Truck Drivers	Dump Truck and Trailer	$26.09		1	
Grant	Truck Drivers	Other Trucks	$27.84		1	
Grant	Truck Drivers	Transit Mixer	$10.00		1	

INFORMATIONAL COPY ONLY

BENEFIT CODE KEY - EFFECTIVE 03-02-2012 THRU 08-30-2012

****

OVERTIME CODES

OVERTIME CALCULATIONS ARE BASED ON THE HOURLY RATE ACTUALLY PAID TO THE WORKER. ON PUBLIC WORKS PROJECTS, THE HOURLY RATE MUST BE NOT LESS THAN THE PREVAILING RATE OF WAGE MINUS THE HOURLY RATE OF THE COST OF FRINGE BENEFITS ACTUALLY PROVIDED FOR THE WORKER.

1. ALL HOURS WORKED IN EXCESS OF EIGHT (8) HOURS PER DAY OR FORTY (40) HOURS PER WEEK SHALL BE PAID AT ONE AND ONE-HALF TIMES THE HOURLY RATE OF WAGE.

B. ALL HOURS WORKED ON SATURDAYS SHALL BE PAID AT ONE AND ONE-HALF TIMES THE HOURLY RATE OF WAGE. ALL HOURS WORKED ON SUNDAYS AND HOLIDAYS SHALL BE PAID AT DOUBLE THE HOURLY RATE OF WAGE.

C. THE FIRST TWO (2) HOURS AFTER EIGHT (8) REGULAR HOURS MONDAY THROUGH FRIDAY AND THE FIRST TEN (10) HOURS ON SATURDAY SHALL BE PAID AT ONE AND ONE-HALF TIMES THE HOURLY RATE OF WAGE. ALL OTHER OVERTIME HOURS AND ALL HOURS WORKED ON SUNDAYS AND HOLIDAYS SHALL BE PAID AT DOUBLE THE HOURLY RATE OF WAGE.

D. THE FIRST TWO (2) HOURS BEFORE OR AFTER A FIVE - EIGHT (8) HOUR WORKWEEK DAY OR A FOUR - TEN (10) HOUR WORKWEEK DAY AND THE FIRST EIGHT (8) HOURS WORKED THE NEXT DAY AFTER EITHER WORKWEEK SHALL BE PAID AT ONE AND ONE-HALF TIMES THE HOURLY RATE OF WAGE. ALL ADDITIONAL HOURS WORKED AND ALL WORKED ON SUNDAYS AND HOLIDAYS SHALL BE PAID AT DOUBLE THE HOURLY RATE OF WAGE.

E. THE FIRST TWO (2) HOURS AFTER EIGHT (8) REGULAR HOURS MONDAY THROUGH FRIDAY AND THE FIRST EIGHT (8) HOURS ON SATURDAY SHALL BE PAID AT ONE AND ONE-HALF TIMES THE HOURLY RATE OF WAGE. ALL OTHER HOURS WORKED MONDAY THROUGH SATURDAY, AND ALL HOURS WORKED ON SUNDAYS AND HOLIDAYS SHALL BE PAID AT DOUBLE THE HOURLY RATE OF WAGE.

F. THE FIRST TWO (2) HOURS AFTER EIGHT (8) REGULAR HOURS MONDAY THROUGH FRIDAY AND THE FIRST TEN (10) HOURS ON SATURDAY SHALL BE PAID AT ONE AND ONE-HALF TIMES THE HOURLY RATE OF WAGE. ALL OTHER OVERTIME HOURS WORKED EXCEPT LABOR DAY, SHALL BE PAID AT DOUBLE THE HOURLY RATE OF WAGE. ALL HOURS WORKED ON LABOR DAY SHALL BE PAID AT THREE TIMES THE HOURLY RATE OF WAGE.

G. THE FIRST TEN (10) HOURS WORKED ON SATURDAYS AND THE FIRST TEN (10) HOURS WORKED ON A FIFTH CALENDAR WEEKDAY IN A FOUR - TEN HOUR SCHEDULE SHALL BE PAID AT ONE AND ONE-HALF TIMES THE HOURLY RATE OF WAGE. ALL HOURS WORKED IN EXCESS OF TEN (10) HOURS PER DAY MONDAY THROUGH SATURDAY AND ALL HOURS WORKED ON SUNDAYS AND HOLIDAYS SHALL BE PAID AT DOUBLE THE HOURLY RATE OF WAGE.

H. ALL HOURS WORKED ON SATURDAYS (EXCEPT MAKEUP DAYS IF WORK IS LOST DUE TO INCLEMENT WEATHER CONDITIONS OR EQUIPMENT BREAKDOWN) SHALL BE PAID AT ONE AND ONE-HALF TIMES THE HOURLY RATE OF WAGE. ALL HOURS WORKED MONDAY THROUGH SATURDAY OVER TWELVE (12) HOURS AND ALL HOURS WORKED ON SUNDAYS AND HOLIDAYS SHALL BE PAID AT DOUBLE THE HOURLY RATE OF WAGE.

I. ALL HOURS WORKED ON SUNDAYS AND HOLIDAYS SHALL ALSO BE PAID AT ONE AND DOUBLE THE HOURLY RATE OF WAGE.

J. THE FIRST TWO (2) HOURS AFTER EIGHT (8) REGULAR HOURS MONDAY THROUGH FRIDAY AND THE FIRST TEN (10) HOURS ON SATURDAY SHALL BE PAID AT ONE AND ONE-HALF TIMES THE HOURLY RATE OF WAGE. ALL HOURS WORKED OVER TEN (10) HOURS MONDAY THROUGH SATURDAY, SUNDAYS AND HOLIDAYS SHALL BE PAID AT DOUBLE THE HOURLY RATE OF WAGE.

K. ALL HOURS WORKED ON SATURDAYS AND SUNDAYS SHALL BE PAID AT ONE AND ONE-HALF TIMES THE HOURLY RATE OF WAGE. ALL HOURS WORKED ON HOLIDAYS SHALL BE PAID AT DOUBLE THE HOURLY RATE OF WAGE.

L. ALL HOURS WORKED IN EXCESS OF TEN (10) HOURS PER DAY MONDAY THROUGH SATURDAY AND ALL HOURS WORKED ON SUNDAYS AND HOLIDAYS SHALL BE PAID AT DOUBLE THE HOURLY RATE OF WAGE.

M. ALL HOURS WORKED ON SATURDAYS (EXCEPT MAKEUP DAYS IF WORK IS LOST DUE TO INCLEMENT WEATHER CONDITIONS) SHALL BE PAID AT ONE AND ONE-HALF TIMES THE HOURLY RATE OF WAGE. ALL HOURS WORKED ON SUNDAYS AND HOLIDAYS SHALL BE PAID AT DOUBLE THE HOURLY RATE OF WAGE.

N. ALL HOURS WORKED ON SATURDAYS (EXCEPT MAKEUP DAYS) SHALL BE PAID AT ONE AND ONE-HALF TIMES THE HOURLY RATE OF WAGE. ALL HOURS WORKED ON SUNDAYS AND HOLIDAYS SHALL BE PAID AT DOUBLE THE HOURLY RATE OF WAGE.

INFORMATIONAL COPY ONLY

1. O. THE FIRST TEN (10) HOURS WORKED ON SATURDAY SHALL BE PAID AT ONE AND ONE-HALF TIMES THE HOURLY RATE OF WAGE. ALL HOURS WORKED ON SUNDAYS, HOLIDAYS AND AFTER TWELVE (12) HOURS, MONDAY THROUGH FRIDAY, AND AFTER TEN (10) HOURS ON SATURDAY SHALL BE PAID AT DOUBLE THE HOURLY RATE OF WAGE.

P. ALL HOURS WORKED ON SATURDAYS (EXCEPT MAKEUP DAYS IF CIRCUMSTANCES WARRANT) AND SUNDAYS SHALL BE PAID AT ONE AND ONE-HALF TIMES THE HOURLY RATE OF WAGE. ALL HOURS WORKED ON HOLIDAYS SHALL BE PAID AT DOUBLE THE HOURLY RATE OF WAGE.

Q. THE FIRST TWO (2) HOURS AFTER EIGHT (8) REGULAR HOURS MONDAY THROUGH FRIDAY AND UP TO TEN (10) HOURS WORKED ON SATURDAYS SHALL BE PAID AT ONE AND ONE-HALF TIMES THE HOURLY RATE OF WAGE. ALL HOURS WORKED IN EXCESS OF TEN (10) HOURS PER DAY MONDAY THROUGH SATURDAY AND ALL HOURS WORKED ON SUNDAYS AND HOLIDAYS (EXCEPT CHRISTMAS DAY) SHALL BE PAID AT DOUBLE THE HOURLY RATE OF WAGE. ALL HOURS WORKED ON CHRISTMAS DAY SHALL BE PAID AT TWO AND ONE-HALF TIMES THE HOURLY RATE OF WAGE.

R. ALL HOURS WORKED ON SUNDAYS AND HOLIDAYS SHALL BE PAID AT TWO TIMES THE HOURLY RATE OF WAGE.

S. THE FIRST TWO (2) HOURS AFTER EIGHT (8) REGULAR HOURS MONDAY THROUGH FRIDAY AND THE FIRST EIGHT (8) HOURS ON SATURDAY SHALL BE PAID AT ONE AND ONE-HALF TIMES THE HOURLY RATE OF WAGE. ALL HOURS WORKED ON HOLIDAYS AND ALL OTHER OVERTIME HOURS WORKED, EXCEPT LABOR DAY, SHALL BE PAID AT DOUBLE THE HOURLY RATE OF WAGE. ALL HOURS WORKED ON LABOR DAY SHALL BE PAID AT THREE TIMES THE HOURLY RATE OF WAGE.

T. WORK PERFORMED IN EXCESS OF EIGHT (8) HOURS OF STRAIGHT TIME PER DAY, OR TEN (10) HOURS OF STRAIGHT TIME PER DAY WHEN FOUR TEN (10) HOUR SHIFTS ARE ESTABLISHED, OR FORTY (40) HOURS OF STRAIGHT TIME PER WEEK, MONDAY THROUGH FRIDAY, OR OUTSIDE THE NORMAL SHIFT, AND ALL WORK ON SATURDAYS SHALL BE PAID AT TIME AND ONE-HALF THE STRAIGHT TIME RATE. HOURS WORKED OVER TWELVE HOURS (12) IN A SINGLE SHIFT AND ALL WORK PERFORMED AFTER 6:00 PM SATURDAY TO 6:00 AM MONDAY AND HOLIDAYS SHALL BE PAID AT DOUBLE THE STRAIGHT TIME RATE OF PAY. THE EMPLOYER SHALL HAVE THE SOLE DISCRETION TO ASSIGN OVERTIME WORK TO EMPLOYEES. PRIMARY CONSIDERATION FOR OVERTIME WORK SHALL BE GIVEN TO EMPLOYEES REGULARLY ASSIGNED TO THE WORK TO BE PERFORMED ON OVERTIME SITUATIONS. AFTER AN EMPLOYEE HAS WORKED EIGHT (8) HOURS AT AN APPLICABLE OVERTIME RATE, ALL ADDITIONAL HOURS SHALL BE AT THE APPLICABLE OVERTIME RATE UNTIL SUCH TIME AS THE EMPLOYEE HAS HAD A BREAK OF EIGHT (8) HOURS OR MORE.

U. ALL HOURS WORKED ON SATURDAYS SHALL BE PAID AT ONE AND ONE-HALF TIMES THE HOURLY RATE OF WAGE. ALL HOURS WORKED ON SUNDAYS AND HOLIDAYS (EXCEPT LABOR DAY) SHALL BE PAID AT TWO TIMES THE HOURLY RATE OF WAGE. ALL HOURS WORKED ON LABOR DAY SHALL BE PAID AT THREE TIMES THE HOURLY RATE OF WAGE.

V. ALL HOURS WORKED ON SUNDAYS AND HOLIDAYS (EXCEPT THANKSGIVING DAY AND CHRISTMAS DAY) SHALL BE PAID AT ONE AND ONE-HALF TIMES THE HOURLY RATE OF WAGE. ALL HOURS WORKED ON THANKSGIVING DAY AND CHRISTMAS DAY SHALL BE PAID AT DOUBLE THE HOURLY RATE OF WAGE.

W. ALL HOURS WORKED ON SATURDAYS AND SUNDAYS (EXCEPT MAKE-UP DAYS DUE TO CONDITIONS BEYOND THE CONTROL OF THE EMPLOYER)) SHALL BE PAID AT ONE AND ONE-HALF TIMES THE HOURLY RATE OF WAGE. ALL HOURS WORKED ON HOLIDAYS SHALL BE PAID AT DOUBLE THE HOURLY RATE OF WAGE.

X. THE FIRST FOUR (4) HOURS AFTER EIGHT (8) REGULAR HOURS MONDAY THROUGH FRIDAY AND THE FIRST TWELVE (12) HOURS ON SATURDAY SHALL BE PAID AT ONE AND ONE-HALF TIMES THE HOURLY RATE OF WAGE. ALL HOURS WORKED OVER TWELVE (12) HOURS MONDAY THROUGH SATURDAY, SUNDAYS AND HOLIDAYS SHALL BE PAID AT DOUBLE THE HOURLY RATE OF WAGE. WHEN HOLIDAY FALLS ON SATURDAY OR SUNDAY, THE DAY BEFORE SATURDAY, FRIDAY, AND THE DAY AFTER SUNDAY, MONDAY SHALL BE CONSIDERED THE HOLIDAY AND ALL WORK PERFORMED SHALL BE PAID AT DOUBLE THE HOURLY RATE OF WAGE.

Y. ALL HOURS WORKED OUTSIDE THE HOURS OF 5:00 AM AND 5:00 PM (OR SUCH OTHER HOURS AS MAY BE AGREED UPON BY ANY EMPLOYER AND THE EMPLOYEE) AND ALL HOURS WORKED IN EXCESS OF EIGHT (8) HOURS PER DAY (10 HOURS PER DAY FOR A 4 X 10 WORKWEEK) AND ON SATURDAYS AND HOLIDAYS (EXCEPT LABOR DAY) SHALL BE PAID AT ONE AND ONE-HALF TIMES THE HOURLY RATE OF WAGE. (EXCEPT FOR EMPLOYEES WHO ARE ABSENT FROM WORK WITHOUT PRIOR APROVAL ON A SCHEDULED WORKDAY DURING THE WORKWEEK SHALL BE PAID AT THE STRAIGHT-TIME RATE UNTIL THEY HAVE WORKED 8 HOURS IN A DAY (10 IN A 4 X 10 WORKWEEK) OR 40 HOURS DURING THAT WORKWEEK.) ALL HOURS WORKED MONDAY THROUGH SATURDAY OVER TWELVE (12) HOURS AND ALL HOURS WORKED ON SUNDAYS AND LABOR DAY SHALL BE PAID AT DOUBLE THE HOURLY RATE OF WAGE.

INFORMATIONAL COPY ONLY

1. Z. ALL HOURS WORKED ON SATURDAYS AND SUNDAYS SHALL BE PAID AT ONE AND ONE-HALF TIMES THE HOURLY RATE OF WAGE. ALL HOURS WORKED ON HOLIDAYS SHALL BE PAID THE STRAIGHT TIME RATE OF PAY IN ADDITION TO HOLIDAY PAY.

2. ALL HOURS WORKED IN EXCESS OF EIGHT (8) HOURS PER DAY OR FORTY (40) HOURS PER WEEK SHALL BE PAID AT ONE AND ONE-HALF TIMES THE HOURLY RATE OF WAGE.

B. ALL HOURS WORKED ON HOLIDAYS SHALL BE PAID AT ONE AND ONE-HALF TIMES THE HOURLY RATE OF WAGE.

C. ALL HOURS WORKED ON SUNDAYS SHALL BE PAID AT ONE AND ONE-HALF TIMES THE HOURLY RATE OF WAGE. ALL HOURS WORKED ON HOLIDAYS SHALL BE PAID AT TWO TIMES THE HOURLY RATE OF WAGE.

F. THE FIRST EIGHT (8) HOURS WORKED ON HOLIDAYS SHALL BE PAID AT THE STRAIGHT HOURLY RATE OF WAGE IN ADDITION TO THE HOLIDAY PAY. ALL HOURS WORKED IN EXCESS OF EIGHT (8) HOURS ON HOLIDAYS SHALL BE PAID AT DOUBLE THE HOURLY RATE OF WAGE.

G. ALL HOURS WORKED ON SUNDAY SHALL BE PAID AT TWO TIMES THE HOURLY RATE OF WAGE. ALL HOURS WORKED ON PAID HOLIDAYS SHALL BE PAID AT TWO AND ONE-HALF TIMES THE HOURLY RATE OF WAGE INCLUDING HOLIDAY PAY.

H. ALL HOURS WORKED ON SUNDAY SHALL BE PAID AT TWO TIMES THE HOURLY RATE OF WAGE. ALL HOURS WORKED ON HOLIDAYS SHALL BE PAID AT ONE AND ONE-HALF TIMES THE HOURLY RATE OF WAGE.

K. ALL HOURS WORKED ON HOLIDAYS SHALL BE PAID AT TWO TIMES THE HOURLY RATE OF WAGE IN ADDITION TO THE HOLIDAY PAY.

O. ALL HOURS WORKED ON SUNDAYS AND HOLIDAYS SHALL BE PAID AT ONE AND ONE-HALF TIMES THE HOURLY RATE OF WAGE.

R. ALL HOURS WORKED ON SUNDAYS AND HOLIDAYS AND ALL HOURS WORKED OVER SIXTY (60) IN ONE WEEK SHALL BE PAID AT DOUBLE THE HOURLY RATE OF WAGE.

U. ALL HOURS WORKED ON SATURDAYS SHALL BE PAID AT ONE AND ONE-HALF TIMES THE HOURLY RATE OF WAGE. ALL HOURS WORKED OVER 12 HOURS IN A DAY, OR ON SUNDAYS AND HOLIDAYS SHALL BE PAID AT DOUBLE THE HOURLY RATE OF WAGE.

W. THE FIRST TWO (2) HOURS AFTER EIGHT (8) REGULAR HOURS MONDAY THROUGH FRIDAY AND THE FIRST EIGHT (8) HOURS ON SATURDAY SHALL BE PAID AT ONE AND ONE-HALF TIMES THE HOURLY RATE OF WAGE. ALL OTHER HOURS WORKED MONDAY THROUGH SATURDAY, AND ALL HOURS WORKED ON SUNDAYS AND HOLIDAYS SHALL BE PAID AT DOUBLE THE HOURLY RATE OF WAGE. ON A FOUR-DAY, TEN-HOUR WEEKLY SCHEDULE, EITHER MONDAY THRU THURSDAY OR TUESDAY THRU FRIDAY SCHEDULE, ALL HOURS WORKED AFTER TEN SHALL BE PAID AT DOUBLE THE HOURLY RATE OF WAGE. THE FIRST EIGHT (8) HOURS WORKED ON THE FIFTH DAY SHALL BE PAID AT ONE AND ONE-HALF TIMES THE HOURLY RATE OF WAGE. ALL OTHER HOURS WORKED ON THE FIFTH, SIXTH, AND SEVENTH DAYS AND ON HOLIDAYS SHALL BE PAID AT DOUBLE THE HOURLY RATE OF WAGE.

Y. ALL HOURS WORKED ON SATURDAYS (EXCEPT FOR MAKE-UP DAYS) SHALL BE PAID AT ONE AND ONE-HALF TIMES THE HOURLY RATE OF WAGE. ALL HOURS WORKED MONDAY THROUGH SATURDAY OVER TWELVE (12) HOURS AND ALL HOURS WORKED ON SUNDAYS AND HOLIDAYS SHALL BE PAID AT DOUBLE THE HOURLY RATE OF WAGE.

Z. ALL HOURS WORKED MONDAY THROUGH FRIDAY BETWEEN THE HOURS OF 6:00 P.M. AND 6:00 A.M. AND ALL HOURS WORKED ON SATURDAYS SHALL BE PAID AT ONE AND ONE-HALF TIMES THE HOURLY RATE OF WAGE, ***EXCEPT*** FOR COMMERCIAL, OCCUPIED BUILDINGS WHERE FLOOR COVERING WORK CANNOT BE PERFORMED IN THE REGULAR DAYTIME HOURS DUE TO OCCUPANCY. FOR SUCH OCCUPIED, COMMERCIAL BUILDINGS; THE EMPLOYEE MAY AGREE TO WORK BETWEEN THE HOURS OF 6:00 PM TO 6:00 AM MONDAY THROUGH SATURDAY MORNING AT 6:00 AM AT AN OVERTIME PAY RATE OF 10% OVER THE STRAIGHT TIME RATE. ALL HOURS WORKED ON SUNDAYS AND HOLIDAYS SHALL BE PAID AT DOUBLE THE HOURLY RATE OF WAGE.

INFORMATIONAL COPY ONLY

3. ALL HOURS WORKED IN EXCESS OF EIGHT (8) HOURS PER DAY OR FORTY (40) HOURS PER WEEK SHALL BE PAID AT ONE AND ONE-HALF TIMES THE HOURLY RATE OF WAGE.

   A. WORK PERFORMED IN EXCESS OF EIGHT (8) HOURS OF STRAIGHT TIME PER DAY, OR TEN (10) HOURS OF STRAIGHT TIME PER DAY WHEN FOUR TEN (10) HOUR SHIFTS ARE ESTABLISHED, OR FORTY (40) HOURS OF STRAIGHT TIME PER WEEK, MONDAY THROUGH FRIDAY, OR OUTSIDE THE NORMAL SHIFT, AND ALL WORK ON SATURDAYS SHALL BE PAID AT TIME AND ONE-HALF THE STRAIGHT TIME RATE. HOURS WORKED OVER TWELVE HOURS (12) IN A SINGLE SHIFT AND ALL WORK PERFORMED AFTER 6:00 PM SATURDAY TO 6:00 AM MONDAY AND HOLIDAYS SHALL BE PAID AT DOUBLE THE STRAIGHT TIME RATE OF PAY. ANY SHIFT STARTING BETWEEN THE HOURS OF 6:00 PM AND MIDNIGHT SHALL RECEIVE AN ADDITIONAL ONE DOLLAR ($1.00) PER HOUR FOR ALL HOURS WORKED THAT SHIFT.
   THE EMPLOYER SHALL HAVE THE SOLE DISCRETION TO ASSIGN OVERTIME WORK TO EMPLOYEES. PRIMARY CONSIDERATION FOR OVERTIME WORK SHALL BE GIVEN TO EMPLOYEES REGULARLY ASSIGNED TO THE WORK TO BE PERFORMED ON OVERTIME SITUATIONS. AFTER AN EMPLOYEE HAS WORKED EIGHT (8) HOURS AT AN APPLICABLE OVERTIME RATE, ALL ADDITIONAL HOURS SHALL BE AT THE APPLICABLE OVERTIME RATE UNTIL SUCH TIME AS THE EMPLOYEE HAS HAD A BREAK OF EIGHT (8) HOURS OR MORE.

   B. THE FIRST FOUR (4) HOURS AFTER EIGHT (8) REGULAR HOURS MONDAY THROUGH FRIDAY AND THE FIRST TWELVE (12) HOURS ON SATURDAY SHALL BE PAID AT ONE AND ONE-HALF TIMES THE HOURLY RATE OF WAGE. ALL HOURS WORKED OVER TWELVE (12) HOURS MONDAY THROUGH SATURDAY, AND ALL HOURS WORKED ON SUNDAYS AND HOLIDAYS SHALL BE PAID AT DOUBLE THE HOURLY RATE OF WAGE.

4. ALL HOURS WORKED IN EXCESS OF EIGHT (8) HOURS PER DAY OR FORTY (40) HOURS PER WEEK SHALL BE PAID AT ONE AND ONE-HALF TIMES THE HOURLY RATE OF WAGE.

   A. ALL HOURS WORKED IN EXCESS OF EIGHT (8) HOURS PER DAY OR FORTY (40) HOURS PER WEEK SHALL BE PAID AT DOUBLE THE HOURLY RATE OF WAGE. ALL HOURS WORKED ON SATURDAYS, SUNDAYS AND HOLIDAYS SHALL BE PAID AT DOUBLE THE HOURLY RATE OF WAGE.

   B. ALL HOURS WORKED ON SATURDAYS (EXCEPT MAKEUP DAYS IF WORK IS LOST DUE TO INCLEMENT WEATHER CONDITIONS) SHALL BE PAID AT ONE AND ONE-HALF TIMES THE HOURLY RATE OF WAGE. ALL HOURS WORKED MONDAY THROUGH SATURDAY OVER TWELVE (12) HOURS AND ALL HOURS WORKED ON SUNDAYS AND HOLIDAYS SHALL BE PAID AT DOUBLE THE HOURLY RATE OF WAGE.

HOLIDAY CODES

5. A. HOLIDAYS: NEW YEAR'S DAY, MEMORIAL DAY, INDEPENDENCE DAY, LABOR DAY, THANKSGIVING DAY, FRIDAY AFTER THANKSGIVING DAY, AND CHRISTMAS DAY (7).

   B. HOLIDAYS: NEW YEAR'S DAY, MEMORIAL DAY, INDEPENDENCE DAY, LABOR DAY, THANKSGIVING DAY, FRIDAY AFTER THANKSGIVING DAY, THE DAY BEFORE CHRISTMAS, AND CHRISTMAS DAY (8).

   C. HOLIDAYS: NEW YEAR'S DAY, PRESIDENTS' DAY, MEMORIAL DAY, INDEPENDENCE DAY, LABOR DAY, THANKSGIVING DAY, THE FRIDAY AFTER THANKSGIVING DAY, AND CHRISTMAS DAY (8).

   D. HOLIDAYS: NEW YEAR'S DAY, MEMORIAL DAY, INDEPENDENCE DAY, LABOR DAY, THANKSGIVING DAY, THE FRIDAY AND SATURDAY AFTER THANKSGIVING DAY, AND CHRISTMAS DAY (8).

   H. HOLIDAYS: NEW YEAR'S DAY, MEMORIAL DAY, INDEPENDENCE DAY, THANKSGIVING DAY, THE DAY AFTER THANKSGIVING DAY, AND CHRISTMAS (6).

   I. HOLIDAYS: NEW YEAR'S DAY, MEMORIAL DAY, INDEPENDENCE DAY, LABOR DAY, THANKSGIVING DAY, AND CHRISTMAS DAY (6).

   J. HOLIDAYS: NEW YEAR'S DAY, MEMORIAL DAY, INDEPENDENCE DAY, THANKSGIVING DAY, FRIDAY AFTER THANKSGIVING DAY, CHRISTMAS EVE DAY, AND CHRISTMAS DAY (7).

   K. HOLIDAYS: NEW YEAR'S DAY, PRESIDENTS' DAY, MEMORIAL DAY, INDEPENDENCE DAY, LABOR DAY, THANKSGIVING DAY, FRIDAY AFTER THANKSGIVING DAY, THE DAY BEFORE CHRISTMAS, AND CHRISTMAS DAY (9).

INFORMATIONAL COPY ONLY

5. L. HOLIDAYS: NEW YEAR'S DAY, MARTIN LUTHER KING JR. DAY, MEMORIAL DAY, INDEPENDENCE DAY, LABOR DAY, THANKSGIVING DAY, FRIDAY AFTER THANKSGIVING DAY, AND CHRISTMAS DAY (8)

N. HOLIDAYS: NEW YEAR'S DAY, PRESIDENTS' DAY, MEMORIAL DAY, INDEPENDENCE DAY, LABOR DAY, VETERANS' DAY, THANKSGIVING DAY, THE FRIDAY AFTER THANKSGIVING DAY, AND CHRISTMAS DAY (9).

P. HOLIDAYS: NEW YEAR'S DAY, MEMORIAL DAY, INDEPENDENCE DAY, LABOR DAY, THANKSGIVING DAY, FRIDAY AND SATURDAY AFTER THANKSGIVING DAY, THE DAY BEFORE CHRISTMAS, AND CHRISTMAS DAY (9). IF A HOLIDAY FALLS ON SUNDAY, THE FOLLOWING MONDAY SHALL BE CONSIDERED AS A HOLIDAY.

R. PAID HOLIDAYS: NEW YEAR'S DAY, MEMORIAL DAY, INDEPENDENCE DAY, LABOR DAY, THANKSGIVING DAY, DAY AFTER THANKSGIVING DAY, ONE-HALF DAY BEFORE CHRISTMAS DAY, AND CHRISTMAS DAY. (7 1/2).

S. PAID HOLIDAYS: NEW YEAR'S DAY, PRESIDENTS' DAY, MEMORIAL DAY, INDEPENDENCE DAY, LABOR DAY, THANKSGIVING DAY, AND CHRISTMAS DAY (7).

T. PAID HOLIDAYS: NEW YEAR'S DAY, WASHINGTON'S BIRTHDAY, MEMORIAL DAY, INDEPENDENCE DAY, LABOR DAY, THANKSGIVING DAY, THE FRIDAY AFTER THANKSGIVING DAY, CHRISTMAS DAY, AND THE DAY BEFORE OR AFTER CHRISTMAS (9).

Z. HOLIDAYS: NEW YEAR'S DAY, MEMORIAL DAY, INDEPENDENCE DAY, LABOR DAY, VETERANS DAY, THANKSGIVING DAY, THE FRIDAY AFTER THANKSGIVING DAY, AND CHRISTMAS DAY (8).

6. A. PAID HOLIDAYS: NEW YEAR'S DAY, PRESIDENTS' DAY, MEMORIAL DAY, INDEPENDENCE DAY, LABOR DAY, THANKSGIVING DAY, THE FRIDAY AFTER THANKSGIVING DAY, AND CHRISTMAS DAY (8).

E. PAID HOLIDAYS: NEW YEAR'S DAY, DAY BEFORE OR AFTER NEW YEAR'S DAY, PRESIDENTS DAY, MEMORIAL DAY, INDEPENDENCE DAY, LABOR DAY, THANKSGIVING DAY, DAY AFTER THANKSGIVING DAY, CHRISTMAS DAY, AND A HALF-DAY ON CHRISTMAS EVE DAY. (9 1/2).

G. PAID HOLIDAYS: NEW YEAR'S DAY, MARTIN LUTHER KING JR. DAY, PRESIDENTS' DAY, MEMORIAL DAY, INDEPENDENCE DAY, LABOR DAY, VETERANS' DAY, THANKSGIVING DAY, THE FRIDAY AFTER THANKSGIVING DAY, CHRISTMAS DAY, AND CHRISTMAS EVE DAY (11).

H. PAID HOLIDAYS: NEW YEAR'S DAY, NEW YEAR'S EVE DAY, MEMORIAL DAY, INDEPENDENCE DAY, LABOR DAY, THANKSGIVING DAY, FRIDAY AFTER THANKSGIVING DAY, CHRISTMAS DAY, THE DAY AFTER CHRISTMAS, AND A FLOATING HOLIDAY (10).

I. PAID HOLIDAYS: NEW YEAR'S DAY, MEMORIAL DAY, INDEPENDENCE DAY, LABOR DAY, THANKSGIVING DAY, FRIDAY AFTER THANKSGIVING DAY, AND CHRISTMAS DAY (7).

Q. PAID HOLIDAYS: NEW YEAR'S DAY, MEMORIAL DAY, INDEPENDENCE DAY, LABOR DAY, VETERANS DAY, THANKSGIVING DAY, THE DAY AFTER THANKSGIVING DAY AND CHRISTMAS DAY (8). UNPAID HOLIDAY: PRESIDENTS' DAY.

T. PAID HOLIDAYS: NEW YEAR'S DAY, PRESIDENTS' DAY, MEMORIAL DAY, INDEPENDENCE DAY, LABOR DAY, THANKSGIVING DAY, THE FRIDAY AFTER THANKSGIVING DAY, THE LAST WORKING DAY BEFORE CHRISTMAS DAY, AND CHRISTMAS DAY (9).

Z. HOLIDAYS: NEW YEAR'S DAY, MEMORIAL DAY, INDEPENDENCE DAY, LABOR DAY, THANKSGIVING DAY, FRIDAY AFTER THANKSGIVING DAY, AND CHRISTMAS DAY (7). IF A HOLIDAY FALLS ON SATURDAY, THE PRECEDING FRIDAY SHALL BE CONSIDERED AS THE HOLIDAY. IF A HOLIDAY FALLS ON SUNDAY, THE FOLLOWING MONDAY SHALL BE CONSIDERED AS THE HOLIDAY.

7. A. HOLIDAYS: NEW YEAR'S DAY, MEMORIAL DAY, INDEPENDENCE DAY, LABOR DAY, THANKSGIVING DAY, THE FRIDAY AND SATURDAY AFTER THANKSGIVING DAY, AND CHRISTMAS DAY (8). ANY HOLIDAY WHICH FALLS ON A SUNDAY SHALL BE OBSERVED AS A HOLIDAY ON THE FOLLOWING MONDAY. IF ANY OF THE LISTED HOLIDAYS FALLS ON A SATURDAY, THE PRECEDING FRIDAY SHALL BE A REGULAR WORK DAY.

B. HOLIDAYS: NEW YEAR'S DAY, MEMORIAL DAY, INDEPENDENCE DAY, LABOR DAY, THANKSGIVING DAY, THE FRIDAY AND SATURDAY AFTER THANKSGIVING DAY, AND CHRISTMAS DAY (8). ANY HOLIDAY WHICH FALLS ON A SUNDAY SHALL BE OBSERVED AS A HOLIDAY ON THE FOLLOWING MONDAY. ANY HOLIDAY WHICH FALLS ON A SATURDAY SHALL BE OBSERVED AS A HOLIDAY ON THE PRECEDING FRIDAY.

INFORMATIONAL COPY ONLY

7. C. HOLIDAYS: NEW YEAR'S DAY, MARTIN LUTHER KING JR. DAY, MEMORIAL DAY, INDEPENDENCE DAY, LABOR DAY, THANKSGIVING DAY, THE FRIDAY AFTER THANKSGIVING DAY, AND CHRISTMAS DAY (8). ANY HOLIDAY WHICH FALLS ON A SUNDAY SHALL BE OBSERVED AS A HOLIDAY ON THE FOLLOWING MONDAY. ANY HOLIDAY WHICH FALLS ON A SATURDAY SHALL BE OBSERVED AS A HOLIDAY ON THE PRECEDING FRIDAY.

D. PAID HOLIDAYS: NEW YEAR'S DAY, MEMORIAL DAY, INDEPENDENCE DAY, LABOR DAY, VETERAN'S DAY, THANKSGIVING DAY, THE FRIDAY AFTER THANKSGIVING DAY, AND CHRISTMAS DAY (8). UNPAID HOLIDAYS: PRESIDENT'S DAY. ANY PAID HOLIDAY WHICH FALLS ON A SUNDAY SHALL BE OBSERVED AS A HOLIDAY ON THE FOLLOWING MONDAY. ANY PAID HOLIDAY WHICH FALLS ON A SATURDAY SHALL BE OBSERVED AS A HOLIDAY ON THE PRECEDING FRIDAY.

E. HOLIDAYS: NEW YEAR'S DAY, MEMORIAL DAY, INDEPENDENCE DAY, LABOR DAY, THANKSGIVING DAY, THE FRIDAY AFTER THANKSGIVING DAY, AND CHRISTMAS DAY (7). ANY HOLIDAY WHICH FALLS ON A SUNDAY SHALL BE OBSERVED AS A HOLIDAY ON THE FOLLOWING MONDAY. ANY HOLIDAY WHICH FALLS ON A SATURDAY SHALL BE OBSERVED AS A HOLIDAY ON THE PRECEDING FRIDAY.

F. HOLIDAYS: NEW YEAR'S DAY, MEMORIAL DAY, INDEPENDENCE DAY, LABOR DAY, THANKSGIVING DAY, THE FRIDAY AFTER THANKSGIVING DAY, THE LAST WORKING DAY BEFORE CHRISTMAS DAY AND CHRISTMAS DAY (8). ANY HOLIDAY WHICH FALLS ON A SUNDAY SHALL BE OBSERVED AS A HOLIDAY ON THE FOLLOWING MONDAY. ANY HOLIDAY WHICH FALLS ON A SATURDAY SHALL BE OBSERVED AS A HOLIDAY ON THE PRECEDING FRIDAY.

G. HOLIDAYS: NEW YEAR'S DAY, MEMORIAL DAY, INDEPENDENCE DAY, LABOR DAY, THANKSGIVING DAY, AND CHRISTMAS DAY (6). ANY HOLIDAY WHICH FALLS ON A SUNDAY SHALL BE OBSERVED AS A HOLIDAY ON THE FOLLOWING MONDAY.

H. HOLIDAYS: NEW YEAR'S DAY, MARTIN LUTHER KING JR. DAY, INDEPENDENCE DAY, MEMORIAL DAY, LABOR DAY, THANKSGIVING DAY, THE FRIDAY AFTER THANKSGIVING DAY, THE LAST WORKING DAY BEFORE CHRISTMAS DAY AND CHRISTMAS DAY (9). ANY HOLIDAY WHICH FALLS ON A SUNDAY SHALL BE OBSERVED AS A HOLIDAY ON THE FOLLOWING MONDAY. ANY HOLIDAY WHICH FALLS ON A SATURDAY SHALL BE OBSERVED AS A HOLIDAY ON THE PRECEDING FRIDAY.

I. HOLIDAYS: NEW YEAR'S DAY, PRESIDENT'S DAY, INDEPENDENCE DAY, MEMORIAL DAY, LABOR DAY, THANKSGIVING DAY, THE FRIDAY AFTER THANKSGIVING DAY, THE DAY BEFORE CHRISTMAS DAY AND CHRISTMAS DAY (9). ANY HOLIDAY WHICH FALLS ON A SUNDAY SHALL BE OBSERVED AS A HOLIDAY ON THE FOLLOWING MONDAY. ANY HOLIDAY WHICH FALLS ON A SATURDAY SHALL BE OBSERVED AS A HOLIDAY ON THE PRECEDING FRIDAY.

J. HOLIDAYS: NEW YEAR'S DAY, INDEPENDENCE DAY, MEMORIAL DAY, LABOR DAY, THANKSGIVING DAY AND CHRISTMAS DAY (6). ANY HOLIDAY WHICH FALLS ON A SUNDAY SHALL BE OBSERVED AS A HOLIDAY ON THE FOLLOWING MONDAY. ANY HOLIDAY WHICH FALLS ON A SATURDAY SHALL BE OBSERVED AS A HOLIDAY ON THE PRECEDING FRIDAY.

K. HOLIDAYS: NEW YEAR'S DAY, MEMORIAL DAY, INDEPENDENCE DAY, THANKSGIVING DAY, THE FRIDAY AND SATURDAY AFTER THANKSGIVING DAY, AND CHRISTMAS DAY (8). ANY HOLIDAY WHICH FALLS ON A SUNDAY SHALL BE OBSERVED AS A HOLIDAY ON THE FOLLOWING MONDAY. ANY HOLIDAY WHICH FALLS ON A SATURDAY SHALL BE OBSERVED AS A HOLIDAY ON THE PRECEDING FRIDAY.

L. HOLIDAYS: NEW YEAR'S DAY, MEMORIAL DAY, LABOR DAY, INDEPENDENCE DAY, THANKSGIVING DAY, THE LAST WORK DAY BEFORE CHRISTMAS DAY, AND CHRISTMAS DAY (7). ANY HOLIDAY WHICH FALLS ON A SUNDAY SHALL BE OBSERVED AS A HOLIDAY ON THE FOLLOWING MONDAY. ANY HOLIDAY WHICH FALLS ON A SATURDAY SHALL BE OBSERVED AS A HOLIDAY ON THE PRECEDING FRIDAY.

M. PAID HOLIDAYS: NEW YEAR'S DAY, THE DAY AFTER OR BEFORE NEW YEAR'S DAY, PRESIDENT'S DAY, MEMORIAL DAY, INDEPENDENCE DAY, LABOR DAY, THANKSGIVING DAY, THE FRIDAY AFTER THANKSGIVING DAY, CHRISTMAS DAY, AND THE DAY AFTER OR BEFORE CHRISTMAS DAY (10). ANY HOLIDAY WHICH FALLS ON A SUNDAY SHALL BE OBSERVED AS A HOLIDAY ON THE FOLLOWING MONDAY. ANY HOLIDAY WHICH FALLS ON A SATURDAY SHALL BE OBSERVED AS A HOLIDAY ON THE PRECEDING FRIDAY.

N. HOLIDAYS: NEW YEAR'S DAY, MEMORIAL DAY, INDEPENDENCE DAY, LABOR DAY, THANKSGIVING DAY, THE FRIDAY AFTER THANKSGIVING DAY, AND CHRISTMAS DAY (7). ANY HOLIDAY WHICH FALLS ON A SUNDAY SHALL BE OBSERVED AS A HOLIDAY ON THE FOLLOWING MONDAY. WHEN CHRISTMAS FALLS ON A SATURDAY, THE PRECEDING FRIDAY SHALL BE OBSERVED AS A HOLIDAY.

INFORMATIONAL COPY ONLY

7. O. PAID HOLIDAYS: NEW YEAR'S DAY, THE DAY AFTER OR BEFORE NEW YEAR'S DAY, PRESIDENT'S DAY, MEMORIAL DAY, INDEPENDENCE DAY, LABOR DAY, THANKSGIVING DAY, THE FRIDAY AFTER THANKSGIVING DAY, CHRISTMAS DAY, THE DAY AFTER OR BEFORE CHRISTMAS DAY, AND THE EMPLOYEES BIRTHDAY. 11). ANY HOLIDAY WHICH FALLS ON A SUNDAY SHALL BE OBSERVED AS A HOLIDAY ON THE FOLLOWING MONDAY. ANY HOLIDAY WHICH FALLS ON A SATURDAY SHALL BE OBSERVED AS A HOLIDAY ON THE PRECEDING FRIDAY.

P. HOLIDAYS: NEW YEAR'S DAY, MEMORIAL DAY, INDEPENDENCE DAY, LABOR DAY, THANKSGIVING DAY, FRIDAY AFTER THANKSGIVING DAY, AND CHRISTMAS DAY (7). ANY HOLIDAY WHICH FALLS ON A SUNDAY SHALL BE OBSERVED AS A HOLIDAY ON THE FOLLOWING MONDAY.

Q. HOLIDAYS: NEW YEAR'S DAY, MEMORIAL DAY, INDEPENDENCE DAY, LABOR DAY, THANKSGIVING DAY, THE FRIDAY AFTER THANKSGIVING DAY, THE LAST WORKING DAY BEFORE CHRISTMAS DAY AND CHRISTMAS DAY (8). ANY HOLIDAY WHICH FALLS ON A SUNDAY SHALL BE OBSERVED AS A HOLIDAY ON THE FOLLOWING MONDAY. IF ANY OF THE LISTED HOLIDAYS FALLS ON A SATURDAY, THE PRECEDING FRIDAY SHALL BE A REGULAR WORK DAY.

NOTE CODES

8. A. IN ADDITION TO THE HOURLY WAGE AND FRINGE BENEFITS, THE FOLLOWING DEPTH PREMIUMS APPLY TO DEPTHS OF FIFTY FEET OR MORE:

OVER 50' TO 100' - $2.00 PER FOOT FOR EACH FOOT OVER 50 FEET
OVER 100' TO 150' - $3.00 PER FOOT FOR EACH FOOT OVER 100 FEET
OVER 150' TO 220' - $4.00 PER FOOT FOR EACH FOOT OVER 150 FEET
OVER 220' - $5.00 PER FOOT FOR EACH FOOT OVER 220 FEET

C. IN ADDITION TO THE HOURLY WAGE AND FRINGE BENEFITS, THE FOLLOWING DEPTH PREMIUMS APPLY TO DEPTHS OF FIFTY FEET OR MORE:

OVER 50' TO 100' - $1.00 PER FOOT FOR EACH FOOT OVER 50 FEET
OVER 100' TO 150' - $1.50 PER FOOT FOR EACH FOOT OVER 100 FEET
OVER 150' TO 200' - $2.00 PER FOOT FOR EACH FOOT OVER 150 FEET
OVER 200' - DIVERS MAY NAME THEIR OWN PRICE

D. WORKERS WORKING WITH SUPPLIED AIR ON HAZMAT PROJECTS RECEIVE AN ADDITIONAL $1.00 PER HOUR.

L. WORKERS ON HAZMAT PROJECTS RECEIVE ADDITIONAL HOURLY PREMIUMS AS FOLLOWS - LEVEL A: $0.75, LEVEL B: $0.50, AND LEVEL C: $0.25.

M. WORKERS ON HAZMAT PROJECTS RECEIVE ADDITIONAL HOURLY PREMIUMS AS FOLLOWS: LEVELS A & B: $1.00, LEVELS C & D: $0.50.

N. WORKERS ON HAZMAT PROJECTS RECEIVE ADDITIONAL HOURLY PREMIUMS AS FOLLOWS - LEVEL A: $1.00, LEVEL B: $0.75, LEVEL C: $0.50, AND LEVEL D: $0.25

P. WORKERS ON HAZMAT PROJECTS RECEIVE ADDITIONAL HOURLY PREMIUMS AS FOLLOWS - CLASS A SUIT: $2.00, CLASS B SUIT: $1.50, CLASS C SUIT: $1.00, AND CLASS D SUIT $0.50.

Q. THE HIGHEST PRESSURE REGISTERED ON THE GAUGE FOR AN ACCUMULATED TIME OF MORE THAN FIFTEEN (15) MINUTES DURING THE SHIFT SHALL BE USED IN DETERMINING THE SCALE PAID.

INFORMATIONAL COPY ONLY

INFORMATIONAL COPY ONLY

Washington State Department of Labor and Industries
Policy Statement
(Regarding the Production of "Standard" or "Non-standard" Items)

Below is the department's (State L&I's) list of criteria to be used in determining whether a prefabricated item is "standard" or "non-standard". For items not appearing on WSDOT's predetermined list, these criteria shall be used by the Contractor (and the Contractor's subcontractors, agents to subcontractors, suppliers, manufacturers, and fabricators) to determine coverage under RCW 39.12. The production, in the State of Washington, of non-standard items is covered by RCW 39.12, and the production of standard items is not. The production of any item outside the State of Washington is not covered by RCW 39.12.

1. Is the item fabricated for a public works project? If not, it is not subject to RCW 39.12. If it is, go to question 2.

2. Is the item fabricated on the public works jobsite? If it is, the work is covered under RCW 39.12. If not, go to question 3.

3. Is the item fabricated in an assembly/fabrication plant set up for, and dedicated primarily to, the public works project? If it is, the work is covered by RCW 39.12. If not, go to question 4.

4. Does the item require any assembly, cutting, modification or other fabrication by the supplier? If not, the work is not covered by RCW 39.12. If yes, go to question 5.

5. Is the prefabricated item intended for the public works project typically an inventory item which could reasonably be sold on the general market? If not, the work is covered by RCW 39.12. If yes, go to question 6.

6. Does the specific prefabricated item, generally defined as standard, have any unusual characteristics such as shape, type of material, strength requirements, finish, etc? If yes, the work is covered under RCW 39.12.

Any firm with questions regarding the policy, WSDOT's Predetermined List, or for determinations of covered and non-covered workers shall be directed to State L&I at (360) 902-5330.

INFORMATIONAL COPY ONLY

WSDOT's
Predetermined List for
Suppliers - Manufactures - Fabricator

Below is a list of potentially prefabricated items, originally furnished by WSDOT to Washington State Department of Labor and Industries, that may be considered non-standard and therefore covered by the prevailing wage law, RCW 39.12. Items marked with an X in the "YES" column should be considered to be non-standard and therefore covered by RCW 39.12. Items marked with an X in the "NO" column should be considered to be standard and therefore not covered. Of course, exceptions to this general list may occur, and in that case shall be evaluated according to the criteria described in State and L&I's policy statement.

ITEM DESCRIPTION	YES	NO
1. Metal rectangular frames, solid metal covers, herringbone grates, and bi-directional vaned grates for Catch Basin Types 1, 1L, 1P, and 2 and Concrete Inlets. See Std. Plans		X
2. Metal circular frames (rings) and covers, circular grates, and prefabricated ladders for Manhole Types 1, 2, and 3, Drywell Types 1, 2, and 3 and Catch Basin Type 2. See Std. Plans		X
3. Prefabricated steel grate supports and welded grates, metal frames and dual vaned grates, and Type 1, 2, and 3 structural tubing grates for Drop Inlets. See Std. Plans.		X
4. Concrete Pipe - Plain Concrete pipe and reinforced concrete pipe Class 2 to 5 sizes smaller than 60 inch diameter.		X
5. Concrete Pipe - Plain Concrete pipe and reinforced concrete pipe Class 2 to 5 sizes larger than 60 inch diameter.		X
6. Corrugated Steel Pipe - Steel lock seam corrugated pipe for culverts and storm sewers, sizes 30 inch to 120 inches in diameter. May also be treated, 1 thru 5.		X
7. Corrugated Aluminum Pipe - Aluminum lock seam corrugated pipe for culverts and storm sewers, sizes 30 inch to 120 inches in diameter. May also be treated, #5.		X

INFORMATIONAL COPY ONLY

WSDOT's
Predetermined List for
Suppliers - Manufactures - Fabricator

	ITEM DESCRIPTION	YES	NO
8.	Anchor Bolts & Nuts - Anchor Bolts and Nuts, for mounting sign structures, luminaries and other items, shall be made from commercial bolt stock. See Contract Plans and Std. Plans for size and material type.		X
9.	Aluminum Pedestrian Handrail - Pedestrian handrail conforming to the type and material specifications set forth in the contract plans. Welding of aluminum shall be in accordance with Section 9-28.14(3).	X	
10.	Major Structural Steel Fabrication - Fabrication of major steel items such as trusses, beams, girders, etc., for bridges.	X	
11.	Minor Structural Steel Fabrication - Fabrication of minor steel Items such as special hangers, brackets, access doors for structures, access ladders for irrigation boxes, bridge expansion joint systems, etc., involving welding, cutting, punching and/or boring of holes. See Contact Plans for item description and shop drawings.	X	
12.	Aluminum Bridge Railing Type BP - Metal bridge railing conforming to the type and material specifications set forth in the Contract Plans. Welding of aluminum shall be in accordance with Section 9-28.14(3).		X
13.	Concrete Piling--Precast-Prestressed concrete piling for use as 55 and 70 ton concrete piling. Concrete to conform to Section 9-19.1 of Std. Spec..	X	
14.	Precast Manhole Types 1, 2, and 3 with cones, adjustment sections and flat top slabs. See Std. Plans.		X
15.	Precast Drywell Types 1, 2, and with cones and adjustment Sections. See Std. Plans.		X
16.	Precast Catch Basin - Catch Basin type 1, 1L, 1P, and 2 With adjustment sections. See Std. Plans.		X

INFORMATIONAL COPY ONLY

WSDOT's
Predetermined List for
Suppliers - Manufactures - Fabricator

ITEM DESCRIPTION	YES	NO
17. Precast Concrete Inlet - with adjustment sections, See Std. Plans		X
18. Precast Drop Inlet Type 1 and 2 with metal grate supports. See Std. Plans.		X
19. Precast Grate Inlet Type 2 with extension and top units. See Std. Plans		X
20. Metal frames, vaned grates, and hoods for Combination Inlets. See Std. Plans		X
21. Precast Concrete Utility Vaults - Precast Concrete utility vaults of various sizes. Used for in ground storage of utility facilities and controls. See Contract Plans for size and construction requirements. Shop drawings are to be provided for approval prior to casting		X
22. Vault Risers - For use with Valve Vaults and Utilities Vaults.		X
23. Valve Vault - For use with underground utilities. See Contract Plans for details.		X
24. Precast Concrete Barrier - Precast Concrete Barrier for use as new barrier or may also be used as Temporary Concrete Barrier. Only new state approved barrier may be used as permanent barrier.		X
25. Reinforced Earth Wall Panels – Reinforced Earth Wall Panels in size and shape as shown in the Plans. Fabrication plant has annual approval for methods and materials to be used. See Shop Drawing. Fabrication at other locations may be approved, after facilities inspection, contact HQ. Lab.	X	
26. Precast Concrete Walls - Precast Concrete Walls - tilt-up wall panel in size and shape as shown in Plans. Fabrication plant has annual approval for methods and materials to be used	X	

INFORMATIONAL COPY ONLY

WSDOT's
Predetermined List for
Suppliers - Manufactures - Fabricator

	ITEM DESCRIPTION	YES	NO
27.	Precast Railroad Crossings - Concrete Crossing Structure Slabs.	X	
28.	12, 18 and 26 inch Standard Precast Prestressed Girder – Standard Precast Prestressed Girder for use in structures. Fabricator plant has annual approval of methods and materials to be used. Shop Drawing to be provided for approval prior to casting girders. See Std. Spec. Section 6-02.3(25)A	X	
29.	Prestressed Concrete Girder Series 4-14 - Prestressed Concrete Girders for use in structures. Fabricator plant has annual approval of methods and materials to be used. Shop Drawing to be provided for approval prior to casting girders. See Std. Spec. Section 6-02.3(25)A .	X	
30.	Prestressed Tri-Beam Girder - Prestressed Tri-Beam Girders for use in structures. Fabricator plant has annual approval of methods and materials to be used. Shop Drawing to be provided for approval prior to casting girders. See Std. Spec. Section 6-02.3(25)A	X	
31.	Prestressed Precast Hollow-Core Slab - Precast Prestressed Hollow-core slab for use in structures. Fabricator plant has annual approval of methods and materials to be used. Shop Drawing to be provided for approval prior to casting girders. See Std. Spec. Section 6-02.3(25)A.	X	
32.	Prestressed-Bulb Tee Girder - Bulb Tee Prestressed Girder for use in structures. Fabricator plant has annual approval of methods and materials to be used. Shop Drawing to be provided for approval prior to casting girders. See Std. Spec. Section 6-02.3(25)A	X	
33.	Monument Case and Cover See Std. Plan.		X

INFORMATIONAL COPY ONLY

WSDOT's
Predetermined List for
Suppliers - Manufactures - Fabricator

	ITEM DESCRIPTION	YES	NO
34.	Cantilever Sign Structure - Cantilever Sign Structure fabricated from steel tubing meeting AASHTO-M-183. See Std. Plans, and Contract Plans for details. The steel structure shall be galvanized after fabrication in accordance with AASHTO-M-111.	X	
35.	Mono-tube Sign Structures - Mono-tube Sign Bridge fabricated to details shown in the Plans. Shop drawings for approval are required prior to fabrication.	X	
36.	Steel Sign Bridges - Steel Sign Bridges fabricated from steel tubing meeting AASHTO-M-138 for Aluminum Alloys. See Std. Plans, and Contract Plans for details. The steel structure shall be galvanized after fabrication in accordance with AASHTO-M-111.	X	
37.	Steel Sign Post - Fabricated Steel Sign Posts as detailed in Std Plans. Shop drawings for approval are to be provided prior to fabrication		X
38.	Light Standard-Prestressed - Spun, prestressed, hollow concrete poles.	X	
39.	Light Standards - Lighting Standards for use on highway illumination systems, poles to be fabricated to conform with methods and materials as specified on Std. Plans. See Special Provisions for pre-approved drawings.	X	
40.	Traffic Signal Standards - Traffic Signal Standards for use on highway and/or street signal systems. Standards to be fabricated to conform with methods and material as specified on Std. Plans. See Special Provisions for pre-approved drawings	X	
41.	Precast Concrete Sloped Mountable Curb (Single and Dual Faced) See Std. Plans.		X

INFORMATIONAL COPY ONLY

WSDOT's
Predetermined List for
Suppliers - Manufactures - Fabricator

ITEM DESCRIPTION	YES	NO
42. Traffic Signs - Prior to approval of a Fabricator of Traffic Signs, the sources of the following materials must be submitted and approved for reflective sheeting, legend material, and aluminum sheeting. **NOTE:** *** Fabrication inspection required. Only signs tagged "Fabrication Approved" by WSDOT Sign Fabrication Inspector to be installed	X	X
	Custom Message	Std Signing Message
43. Cutting & bending reinforcing steel		X
44. Guardrail components	X	X
	Custom End Sec	Standard Sec
45. Aggregates/Concrete mixes	Covered by WAC 296-127-018	
46. Asphalt	Covered by WAC 296-127-018	
47. Fiber fabrics		X
48. Electrical wiring/components		X
49. treated or untreated timber pile		X
50. Girder pads (elastomeric bearing)	X	
51. Standard Dimension lumber		X
52. Irrigation components		X

INFORMATIONAL COPY ONLY

WSDOT's
Predetermined List for
Suppliers - Manufactures - Fabricator

ITEM DESCRIPTION	YES	NO
53. Fencing materials		X
54. Guide Posts		X
55. Traffic Buttons		X
56. Epoxy		X
57. Cribbing		X
58. Water distribution materials		X
59. Steel "H" piles		X
60. Steel pipe for concrete pile casings		X
61. Steel pile tips, standard		X
62. Steel pile tips, custom	X	

INFORMATIONAL COPY ONLY

State of Washington
Department of Labor and Industries
Prevailing Wage Section - Telephone (360) 902-
PO Box 44540, Olympia, WA 98504-4540
Washington State Prevailing Wage

The PREVAILING WAGES listed here include both the hourly wage rate and the hourly rate of fringe benefits. On public works projects, workers' wage and benefit rates must add to not less than this total. A brief description of overtime calculation requirements is provided on the Benefit Code Key.

METAL FABRICATION (IN SHOP)
EFFECTIVE 03/02/2012

****

(See Benefit Code Key)

Classification Code	Prevailing Wage	Overtime Code	Holiday Code
Counties Covered: **ADAMS**			
FITTER	$12.76	1	
LABORER	$9.04	1	
MACHINE OPERATOR	$12.66	1	
PAINTER	$10.20	1	
Counties Covered: **ASOTIN, COLUMBIA, DOUGLAS, FERRY, FRANKLIN, GARFIELD, KITTITAS LINCOLN, OKANOGAN, PEND OREILLE, STEVENS, WALLA WALLA AND WHITMAN**			
FITTER	$12.76	1	
LABORER	$9.04	1	
MACHINE OPERATOR	$12.66	1	
PAINTER	$10.20	1	
WELDER	$12.76	1	
Counties Covered: **BENTON**			
MACHINE OPERATOR	$10.53		
PAINTER	$9.76	1	
WELDER	$16.70	1	
		1	
Counties Covered: **CHELAN**			
FITTER	$15.04	1	
LABORER	$9.54	1	
MACHINE OPERATOR	$9.71	1	
PAINTER	$9.93	1	
WELDER	$12.24	1	

INFORMATIONAL COPY ONLY

METAL FABRICATION (IN SHOP)
EFFECTIVE 03/02/2012

****

(See Benefit Code Key)

Classification Code	Prevailing Wage	Overtime Code	Holiday Code
Counties Covered:			
CLALLAM, GRAYS HARBOR, ISLAND, JEFFERSON, LEWIS, MASON, PACIFIC SAN JUAN AND SKAGIT			
FITTER/WELDER	$15.16	1	
LABORER	$11.13	1	
MACHINE OPERATOR	$10.66	1	
PAINTER	$11.41	1	
Counties Covered: **CLARK**			
FITTER	$31.77	1E	6H
LABORER	$21.91	1E	6H
LAYEROUT	$31.47	1E	6H
MACHINE OPERATOR	$31.47	1E	6H
PAINTER	$28.01	1E	6H
WELDER	$29.59	1E	6H
Counties Covered: **COWLITZ**			
MACHINE OPERATOR	$25.33	1B	2S
FITTER	$25.33	1B	2S
WELDER	$25.33	1B	2S
Counties Covered: **GRANT**			
FITTER/WELDER	$10.79	1	
PAINTER	$9.04	1	
Counties Covered: **KING**			
FITTER	$15.86	1	
LABORER	$9.78	1	
MACHINE OPERATOR	$13.04	1	
PAINTER	$11.10	1	
WELDER	$15.48		

INFORMATIONAL COPY ONLY

METAL FABRICATION (IN SHOP)
EFFECTIVE 03/02/2012

****

(See Benefit Code Key)

Classification Code	Prevailing Wage	Overtime Code	Holiday Code
Counties Covered: **KITSAP**			
FITTER	$26.96	1	
LABORER	$8.67	1	
MACHINE OPERATOR	$13.83	1	
WELDER	$13.83	1	
Counties Covered: **KLICKITAT, SKAMANIA, WAHKIAKUM**			
FITTER	$16.99	1	
LABORER	$10.44	1	
MACHINE OPERATOR	$17.21	1	
PAINTER	$17.03	1	
WELDER	$16.99	1	
Counties Covered: **PIERCE**			
FITTER	$15.25	1	
LABORER	$10.32	1	
MACHINE OPERATOR	$13.98	1	
WELDER	$13.98	1	
Counties Covered: **SNOHOMISH**			
FITTER/WELDER	$15.38	1	
LABORER	$9.79	1	
MACHINE OPERATOR	$9.04	1	
PAINTER	$9.98	1	
Counties Covered: **SPOKANE**			
FITTER	$12.59	1	
LABORER	$9.04	1	
MACHINE OPERATOR	$13.26	1	
PAINTER	$10.27	1	
WELDER	$10.80	1	

INFORMATIONAL COPY ONLY

METAL FABRICATION (IN SHOP)
EFFECTIVE 03/02/2012

****

(See Benefit Code Key)

Classification Code	Prevailing Wage	Overtime Code	Holiday Code
Counties Covered: **THURSTON**			
FITTER	$27.10	2U	6T
LABORER	$16.91	2U	6T
LAYEROUT	$30.63	2U	6T
MACHINE OPERATOR	$20.86	2U	6T
WELDER	$24.74	2U	6T
Counties Covered: **WHATCOM**			
FITTER/WELDER	$13.81	1	
LABORER	$9.04	1	
MACHINE OPERATOR	$13.81	1	
Counties Covered: **YAKIMA**			
FITTER	$12.00	1	
LABORER	$10.31	1	
MACHINE OPERATOR	$11.32	1	
PAINTER	$12.00	1	
WELDER	$11.32	1	

INFORMATIONAL COPY ONLY

FABRICATED PRECAST CONCRETE PRODUCTS
EFFECTIVE 03/02/2012

****

(See Benefit Code Key)

Classification Code	Prevailing Wage	Overtime Code	Holiday Code
Counties Covered: **ADAMS, ASOTIN, BENTON, COLUMBIA, DOUGLAS, FERRY, GARFIELD, GRANT, LINCOLN, OKANOGAN, PEND OREILLE, STEVENS, WALLA WALLA AND WHITMAN**			
JOURNEY LEVEL	$9.96	1	
Counties Covered: **CHELAN, KITTITAS, KLICKITAT AND SKAMANIA**			
JOURNEY LEVEL	$9.04	1	
Counties Covered: **CLALLAM, CLARK, COWLITZ, GRAYS HARBOR, ISLAND, JEFFERSON, KITSAP,LEWIS, MASON, PACIFIC, SAN JUAN, SKAGIT, SNOHOMISH, THURSTON AND WAHKIAKUM**			
JOURNEY LEVEL	$13.50	1	
Counties Covered: **FRANKLIN**			
JOURNEY LEVEL	$11.50	1	
Counties Covered: **KING**			
ALL CLASSIFICATIONS	$13.85	2K	5B
Counties Covered: **PIERCE**			
JOURNEY LEVEL	$9.28	1	
Counties Covered: **SPOKANE**			
JOURNEY LEVEL	$20.23	1	
Counties Covered: **WHATCOM**			
JOURNEY LEVEL	$13.67	1	
Counties Covered: **YAKIMA**			
CRAFTSMAN	$9.04	1	
JOURNEY LEVEL	$9.04	1	

INFORMATIONAL COPY ONLY

WSDOT's List of State Occupations not applicable to Heavy and Highway Construction Projects

This project is subject to the state hourly minimum rates for wages and fringe benefits in the contract provisions, as provided by the state Department of Labor and Industries.
The following list of occupations, is comprised of those occupations that are not normally used in the construction of heavy and highway projects.
When considering job classifications for use and / or payment when bidding on, or building heavy and highway construction projects for, or administered by WSDOT, these occupations will be excepted from the included "Washington State Prevailing Wage Rates For Public Work Contracts" documents.

- Electrical Fixture Maintenance Workers
- Electricians - Motor Shop
- Heating Equipment Mechanics
- Industrial Engine and Machine Mechanics
- Industrial Power Vacuum Cleaners
- Inspection, Cleaning, Sealing of Water Systems by Remote Control
- Laborers - Underground Sewer & Water
- Machinists (Hydroelectric Site Work)
- Modular Buildings
- Playground & Park Equipment Installers
- Power Equipment Operators - Underground Sewer & Water
- Residential *** ALL ASSOCIATED RATES ***
- Sign Makers and Installers (Non-Electrical)
- Sign Makers and Installers (Electrical)
- Stage Rigging Mechanics (Non Structural)

The following occupations may be used only as outlined in the preceding text concerning "WSDOT's list for Suppliers - Manufacturers - Fabricators"

- Fabricated Precast Concrete Products
- Metal Fabrication (In Shop)

Definitions for the Scope of Work for prevailing wages may be found at the Washington State Department of Labor and Industries web site and in WAC Chapter 296-127.

INFORMATIONAL COPY ONLY

WAC 296-127-018 Agency filings affecting this section

Coverage and exemptions of workers involved in the production and delivery of gravel, concrete, asphalt, or similar materials.

(1) The materials covered under this section include but are not limited to: Sand, gravel, crushed rock, concrete, asphalt, or other similar materials.

(2) All workers, regardless of by whom employed, are subject to the provisions of chapter 39.12 RCW when they perform any or all of the following functions:

(a) They deliver or discharge any of the above-listed materials to a public works project site:

(i) At one or more point(s) directly upon the location where the material will be incorporated into the project; or

(ii) At multiple points at the project; or

(iii) Adjacent to the location and coordinated with the incorporation of those materials.

(b) They wait at or near a public works project site to perform any tasks subject to this section of the rule.

(c) They remove any materials from a public works construction site pursuant to contract requirements or specifications (e.g., excavated materials, materials from demolished structures, clean-up materials, etc.).

(d) They work in a materials production facility (e.g., batch plant, borrow pit, rock quarry, etc.,) which is established for a public works project for the specific, but not necessarily exclusive, purpose of supplying materials for the project.

(e) They deliver concrete to a public works site regardless of the method of incorporation.

(f) They assist or participate in the incorporation of any materials into the public works project.

INFORMATIONAL COPY ONLY

(3) All travel time that relates to the work covered under subsection (2) of this section requires the payment of prevailing wages. Travel time includes time spent waiting to load, loading, transporting, waiting to unload, and delivering materials. Travel time would include all time spent in travel in support of a public works project whether the vehicle is empty or full. For example, travel time spent returning to a supply source to obtain another load of material for use on a public works site or returning to the public works site to obtain another load of excavated material is time spent in travel that is subject to prevailing wage. Travel to a supply source, including travel from a public works site, to obtain materials for use on a private project would not be travel subject to the prevailing wage.

(4) Workers are not subject to the provisions of chapter 39.12 RCW when they deliver materials to a stockpile.

(a) A "stockpile" is defined as materials delivered to a pile located away from the site of incorporation such that the stockpiled materials must be physically moved from the stockpile and transported to another location on the project site in order to be incorporated into the project.

(b) A stockpile does not include any of the functions described in subsection (2)(a) through (f) of this section; nor does a stockpile include materials delivered or distributed to multiple locations upon the project site; nor does a stockpile include materials dumped at the place of incorporation or adjacent to the location and coordinated with the incorporation.

(5) The applicable prevailing wage rate shall be determined by the locality in which the work is performed. Workers subject to subsection (2)(d) of this section, who produce such materials at an off-site facility shall be paid the applicable prevailing wage rates for the county in which the off-site facility is located. Workers subject to subsection (2) of this section, who deliver such materials to a public works project site shall be paid the applicable prevailing wage rates for the county in which the public works project is located.

[Statutory Authority: Chapter 39.12 RCW, RCW 43.22.051 and 43.22.270. 08-24-101, § 296-127-018, filed 12/2/08, effective 1/2/09. Statutory Authority: Chapters 39.04 and 39.12 RCW and RCW 43.22.270. 92-01-104 and 92-08-101, § 296-127-018, filed 12/18/91 and 4/1/92, effective 8/31/92.]

INFORMATIONAL COPY ONLY

Neva Lake Rd. Test Pits
Sta. 40+00-41+50

Test Pits

TP-1

0.0'-0.5'	TOPSOIL	Silty GRAVEL with Sand (GM), medium brown, Medium Dense, damp, cobbles to 10" in size.
0.5'-1.5'	ALLUVIUM	Sandy GRAVEL (GW), medium brown, dense, damp, cobbles to 10" in size, minor silt.
1.5'-6.0'	ALLUVIUM	Sandy GRAVEL (GW), medium grey, dense, damp, cobbles to 15" in size.
		TD @ 6.0' due Large boulder

TP-2

0.0'-0.5'	TOPSOIL	Silty GRAVEL with Sand (GM), medium brown, Medium Dense, damp, cobbles to 10" in size.
0.5'-1.5'	ALLUVIUM	Sandy GRAVEL (GW), medium brown, dense, damp, cobbles to 10" in size, minor silt.
1.5'-2.7'	ALLUVIUM	Sandy GRAVEL (GW), medium grey, dense, damp, cobbles to 15" in size.
		TD @ 2.7' on hard flat Basalt bedrock

TP-3

0.0'-1.2'	TOPSOIL	Sandy SILT (ML/SM), medium brown, medium dense, damp.
1.2'-2.1'	ALLUVIUM	Sandy GRAVEL (GW), medium brown, dense, damp, cobbles to 10" in size, minor silt.
2.1'-6.0'	ALLUVIUM	Sandy GRAVEL (GW), medium grey, dense, damp, cobbles to 15" in size.
		TD @ 6.0', still in medium grey sandy gravel.

INFORMATIONAL COPY ONLY

INFORMATIONAL COPY ONLY

Depth (ft BGS)	Geology	General Unit	Soil Sample	Log
-5				
0		Outwash		Dry gray SAND and GRAVEL w/ cobbles and bits of refuse.
5				Damp brown SILT grading to medium SAND with gravel.
10		BASALT		Dry gray BASALT, hard with trace weathering.
15				
20		WEATHERED BASALT		Damp brown SILT and soft BASALT grading to dry silty soft BASALT.
25				
30		BASALT		Moderately hard gray BASALT grading to hard grey BASALT.
35				
40				
45		WEATHERED BASALT		Damp, slightly clayey SILT and BASALT, wet at 46 feet.
		BASALT		Hard, dry gray BASALT.
50		WEATHERED BASALT		Damp brown SILT and soft BASALT, with trace clay.
55				
60		BASALT		Fractured BASALT with silt and water, grading to hard gray BASALT.
65				

Well Construction

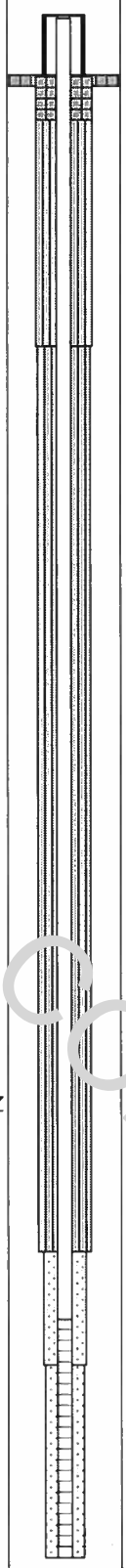

Above-ground Completion with a 2.5-foot Well Stick-up and Slip Cap. Protected by Locking Steel Stickup Monument.

Concrete 0-2 feet

8" Borehole (0 - 12 feet)

2" PVC Riser (-2.5 to 55 feet)

Hydrated Bentonite Pellets (2 - 52 feet)

7.5" Borehole (12 - 52 feet)

10-20 Colorado Silica Sand Pack (52 - 65.5 feet)

6" Borehole (52 - 57 feet)

2" SCH 40 20-Slot Milled PVC Screen (55 - 65 feet)

5.5" Borehole (57 - 65.5 feet)

2" PVC End Cap (65 - 65.5 feet)

INFORMATIONAL COPY ONLY

Project Name: Ephrata RI Phase 2
Drilling Method: Air Rotary
Driller: Tim
Environmental West
Consulting Firm: Pacific Groundwater Group
Logged by: Dawn Chapel
Location: SW1/4 of NW1/4 Section 33 T21N R26E

Well Name: MW-42-B
Ecology ID: BBH636
MP Elevation: 1280.76 feet
Datum: Sea level
Installed: 9/2/09
DTW: 45.77 BMP on 9/23/09
Page 1 of 1

GEOLOGIC LOG AND AS-BUILT FOR WELL MW-42-B
Ephrata Landfill
Ephrata, Washington
JE0714a, 09/2009

P G

INFORMATIONAL COPY ONLY

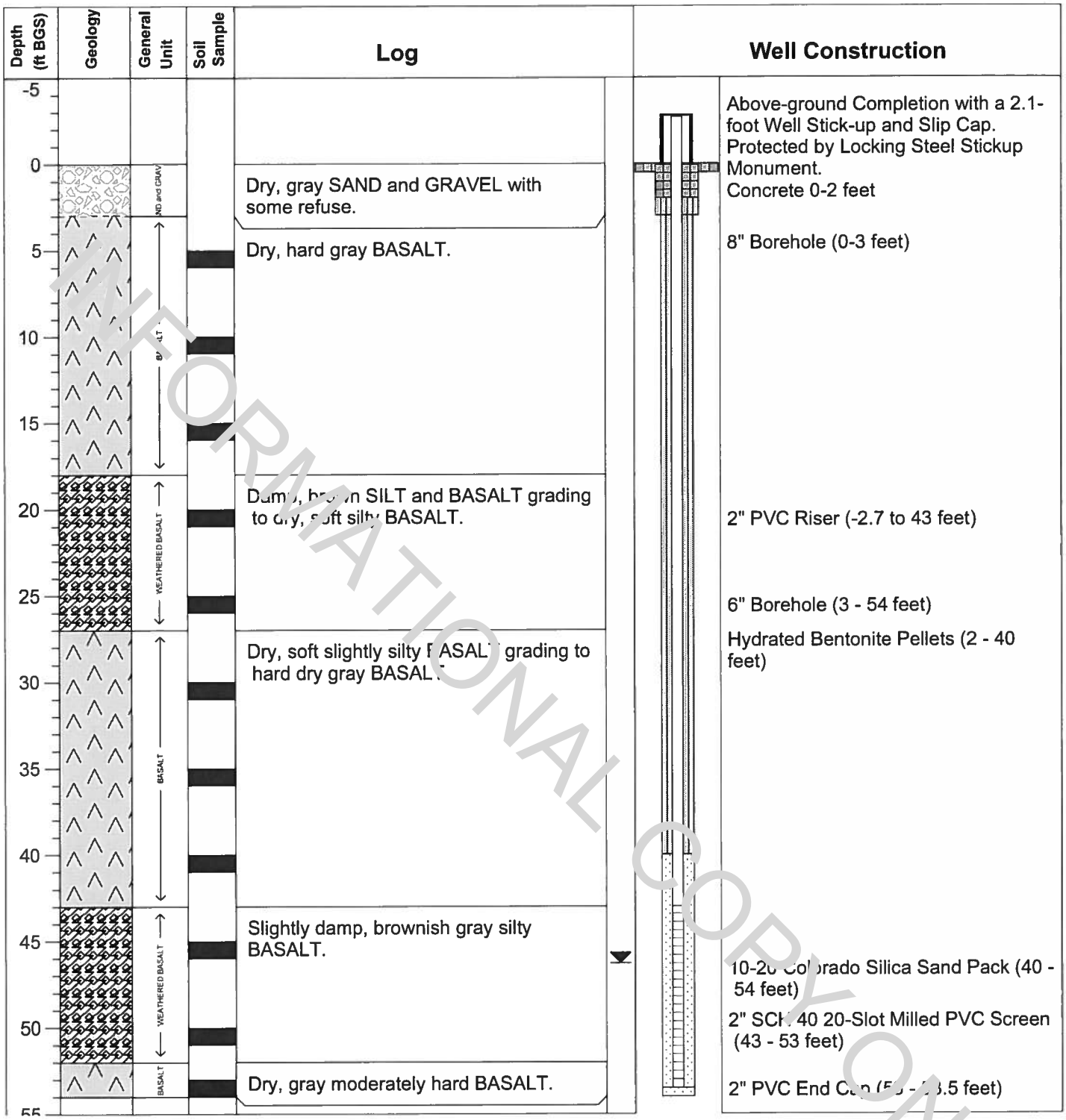

INFORMATIONAL COPY ONLY

Project Name: Ephrata RI Phase 2
Drilling Method: Air Rotary
Driller: Tim
Environmental West
Consulting Firm: Pacific Groundwater Group
Logged by: Dawn Chapel
Location: SW1/4 of NW1/4 Section 33 T21N R26E

Well Name: MW-43-P2
Ecology ID: BBH637
MP Elevation: 1281.07 feet
Datum: Sea level
Installed: 9/3/09
DTW: 48.99 BMP on 9/23/09
Page 1 of 1

GEOLOGIC LOG AND AS-BUILT FOR WELL MW-43-P2
Ephrata Landfill
Ephrata, Washington
JE0714a, 09/2009

PgG

INFORMATIONAL COPY ONLY

TYPICAL MONUMENT INSTALLATION

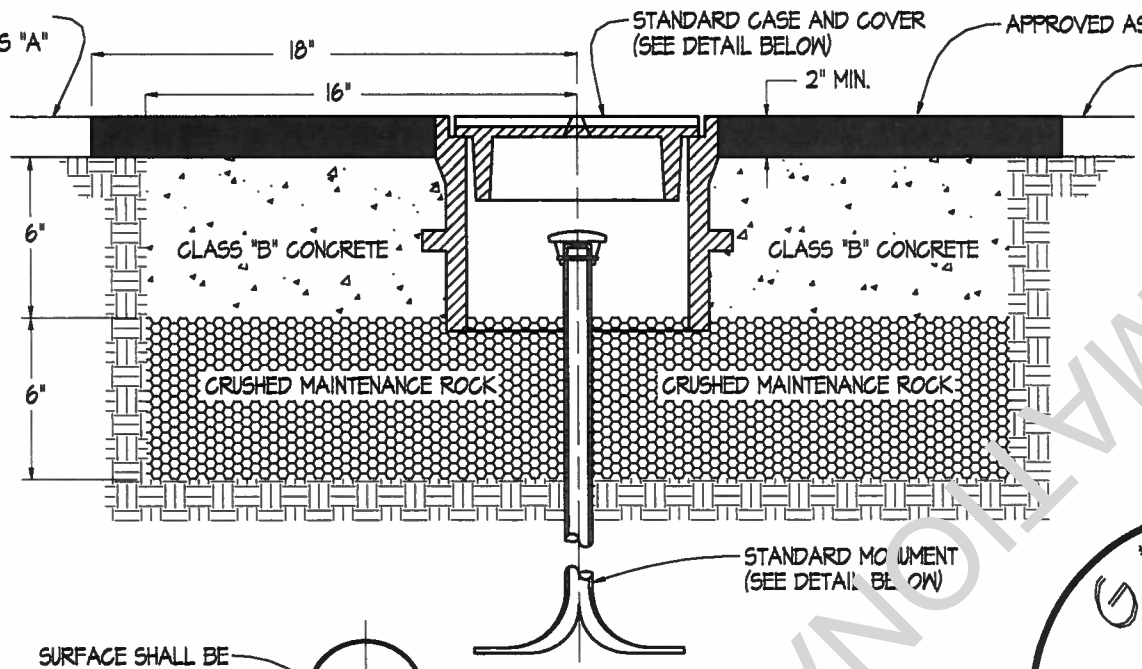

NOTES
COVER AND SEAT SHALL BE MACHINED SO AS TO HAVE PERFECT CONTACT AROUND THE ENTIRE CIRCUMFERENCE AND FULL WIDTH OF BEARING SURFACE.
SPECIFICATIONS:
MATERIAL - CAST IRON BODY AS PER ASTM. A48 CL. 40
APPROX. WEIGHT - BODY - 60LBS. COVER 20 LBS.

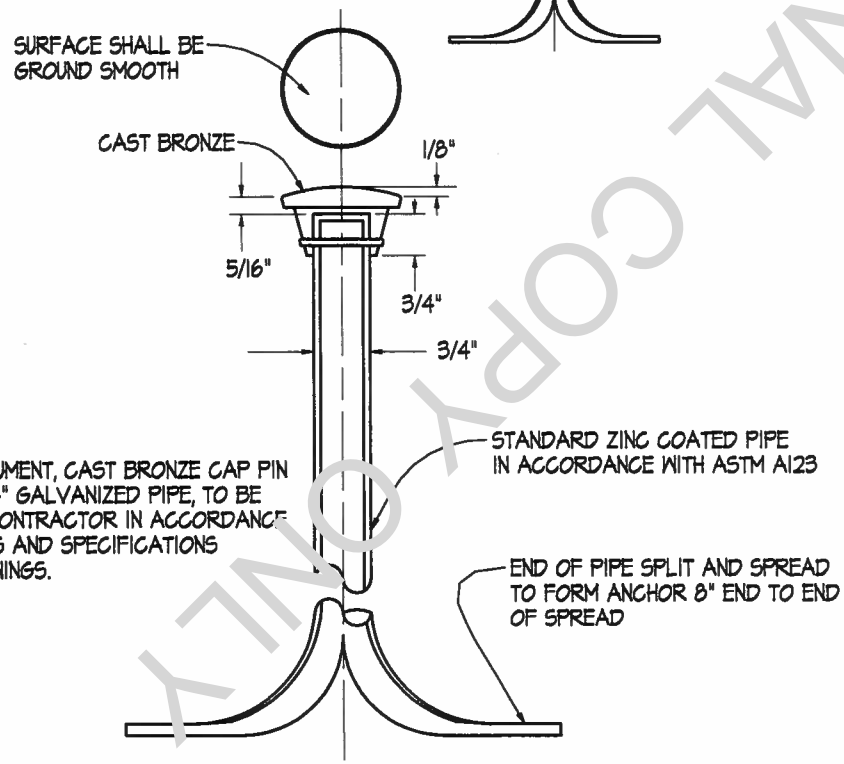

STANDARD MONUMENT, CAST BRONZE CAP PIN MOUNTED TO 3/4" GALVANIZED PIPE, TO BE FURNISHED BY CONTRACTOR IN ACCORDANCE WITH DIMENSIONS AND SPECIFICATIONS SHOWN ON DRAWINGS.

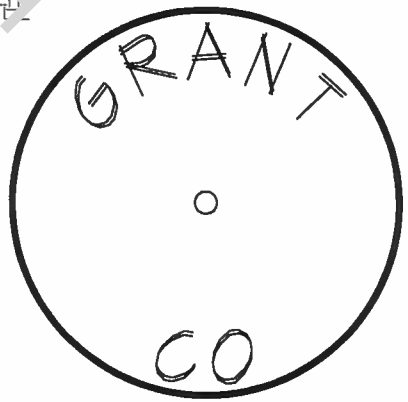

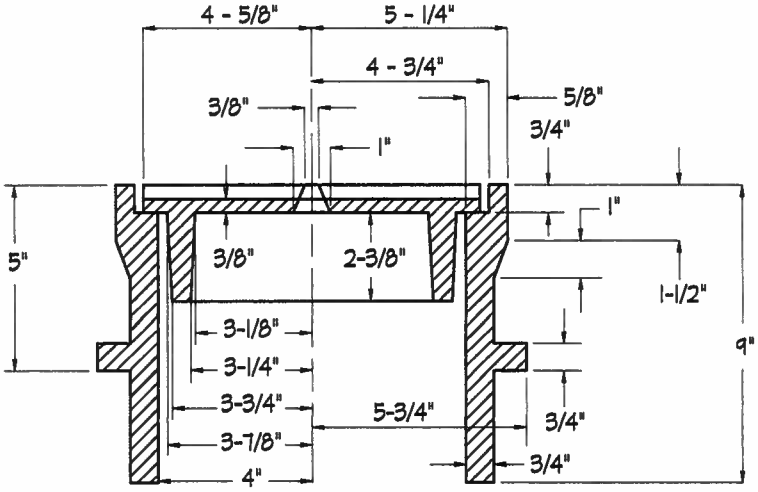

INFORMATIONAL COPY ONLY

INFORMATIONAL COPY ONLY

DRAWN BY: BILL BERENS

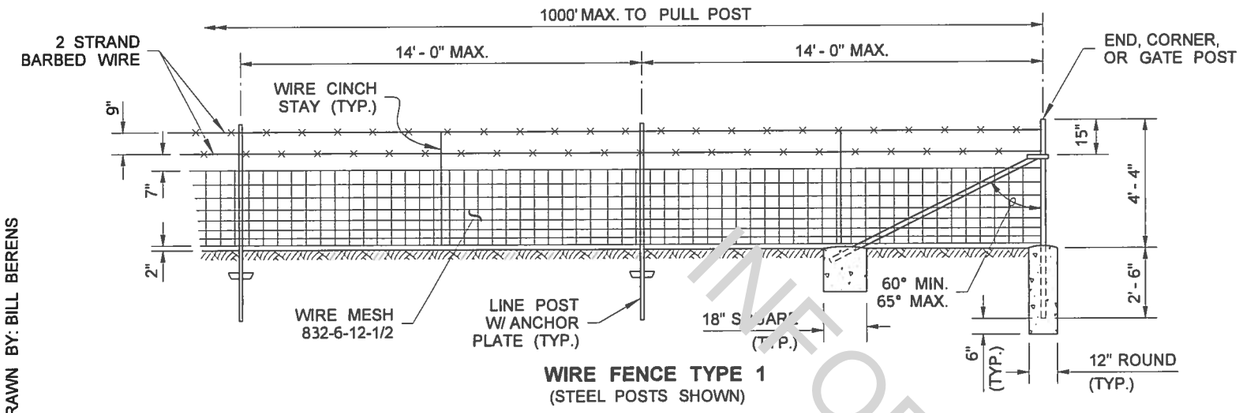

WIRE FENCE TYPE 1
(STEEL POSTS SHOWN)

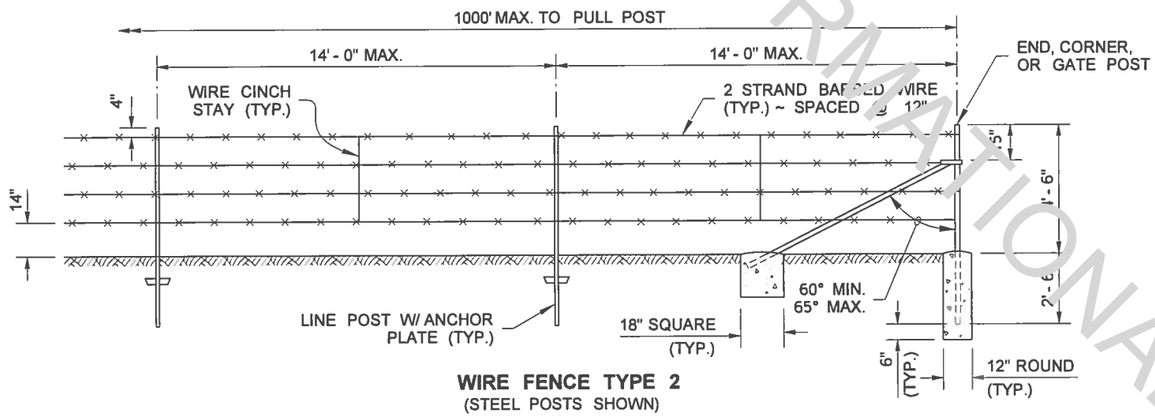

WIRE FENCE TYPE 2
(STEEL POSTS SHOWN)

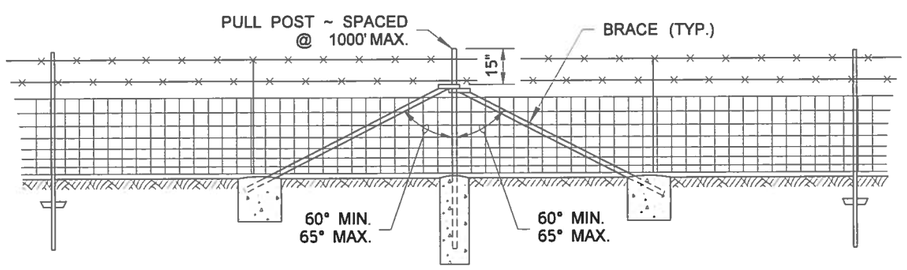

INTERMEDIATE BRACING / PULL POST
(SHOWN FOR WIRE FENCE TYPE 1)

NOTES

1. The bracing and pull post details for Wire Fence Type 2 are the same as for Type 1.
2. Attach the wire mesh to the posts using four fasteners. Three additional fasteners per post are required within and at the limits of sag conditions. Use additional fasteners on posts which mark the angle point of any sudden change in topography.
3. See **Standard Specification 9-16.2(1)** for wood post sizes. Wood anchors (for wood posts) shall be 2×4 lumber, 12" long minimum, and fastened with three 16d galvanized nails.

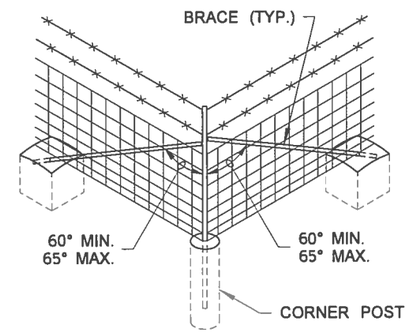

CORNER BRACING
(SHOWN FOR WIRE FENCE TYPE 1)

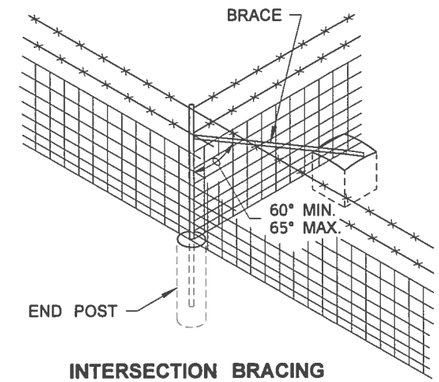

INTERSECTION BRACING
(SHOWN FOR WIRE FENCE TYPE 1)

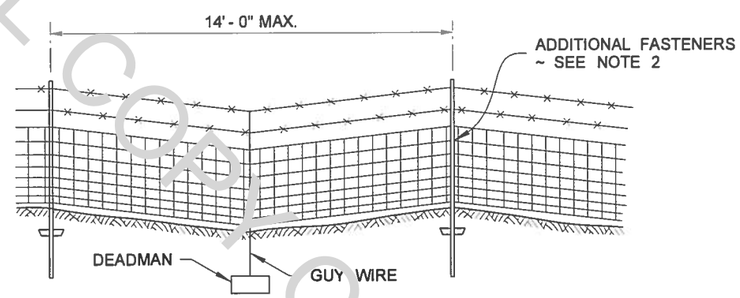

GRADE DEPRESSION (SAG) DETAIL
(STEEL POSTS SHOWN)

STEEL POSTS AND BRACES

POST AND RAIL SPECIFICATIONS

POST	PIPE	ROLL FORMED		H - COLUMN	T-POST
	NOM. SIZE (SCH. 40) I.D.	SECTION	WEIGHT (lb/ft)	WEIGHT (lb/ft)	WEIGHT (lb/ft)
END, CORNER, OR PULL POST	2 1/2" DIAM.	Y	5.10		
LINE OR BRACE POST	2" DIAM.	Z	1.85	3.26	3.10

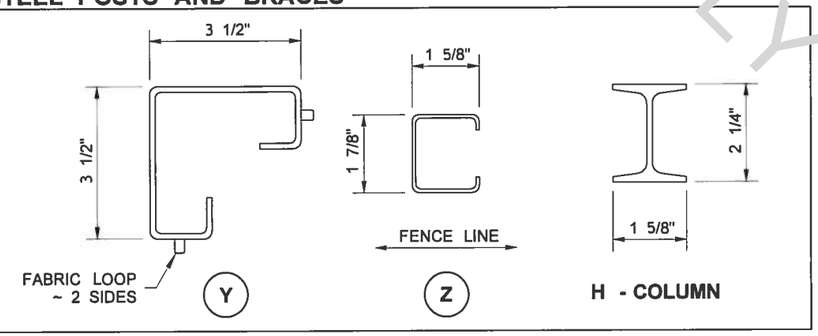

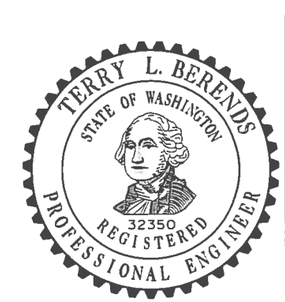

NOTE: THIS PLAN IS NOT A LEGAL ENGINEERING DOCUMENT BUT AN ELECTRONIC DUPLICATE. THE ORIGINAL, SIGNED BY THE ENGINEER AND APPROVED FOR PUBLICATION, IS KEPT ON FILE AT THE WASHINGTON STATE DEPARTMENT OF TRANSPORTATION. A COPY MAY BE OBTAINED UPON REQUEST.

WIRE FENCE TYPES 1 & 2 AND WIRE GATES

STANDARD PLAN L-10.10-01

SHEET 1 OF 2 SHEETS

APPROVED FOR PUBLICATION

Pasco Bakotich III — 06-16-11
STATE DESIGN ENGINEER — DATE

Washington State Department of Transportation

INFORMATIONAL COPY ONLY

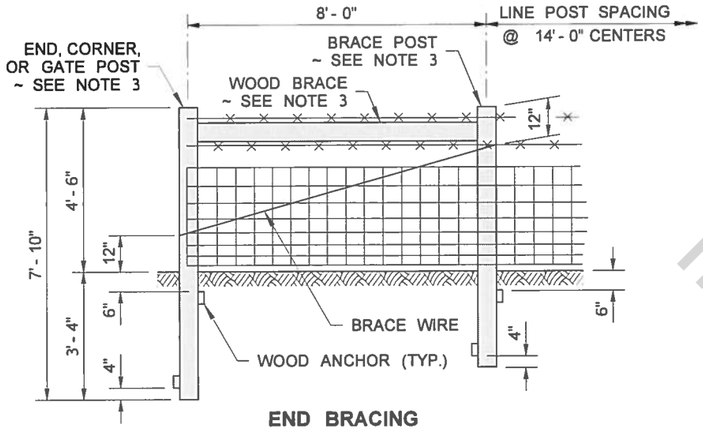

END BRACING
(WIRE FENCE TYPE 1 SHOWN)

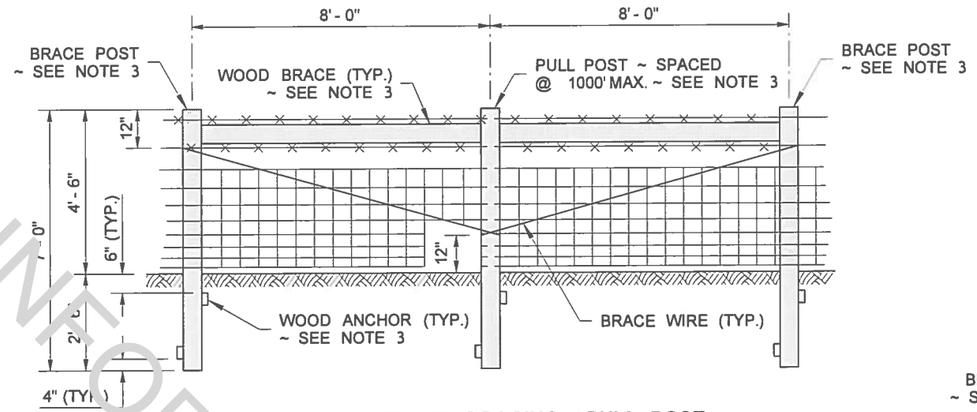

INTERMEDIATE BRACING / PULL POST
(WIRE FENCE TYPE 1 SHOWN)

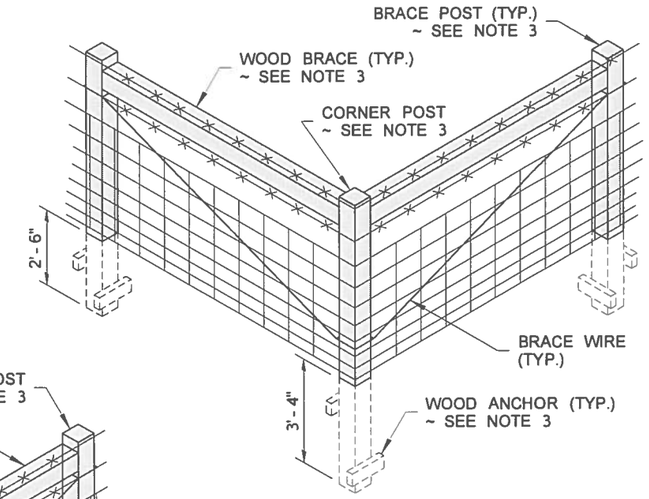

CORNER BRACING
(WIRE FENCE TYPE 1 SHOWN)

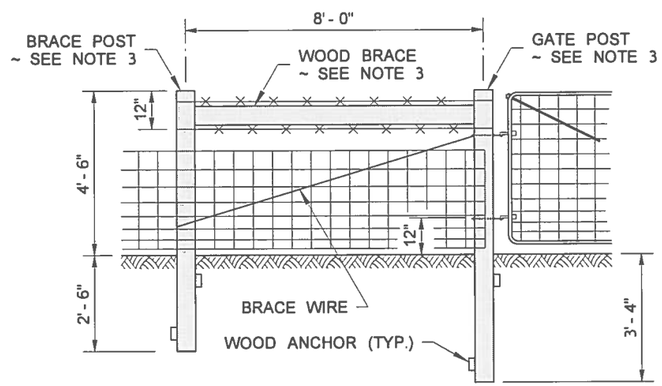

GATE BRACING
(WIRE FENCE TYPE 1 SHOWN)

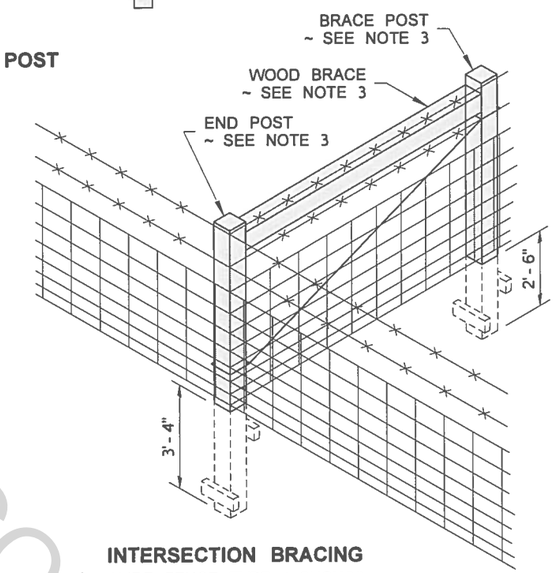

INTERSECTION BRACING
(WIRE FENCE TYPE 1 SHOWN)

WOOD POSTS AND BRACES

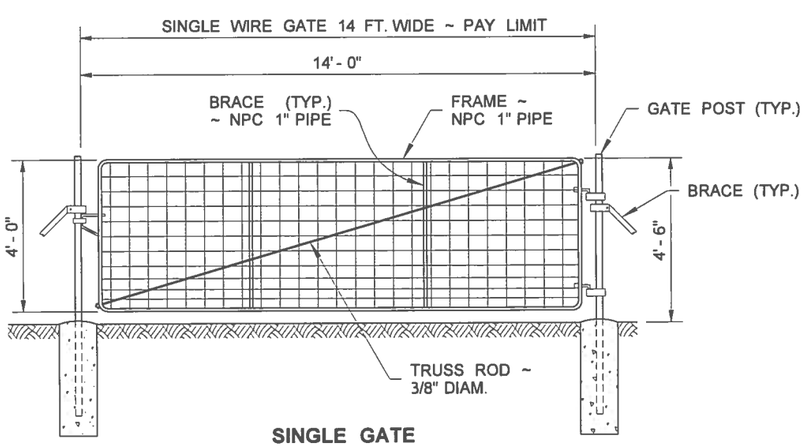

SINGLE GATE
(STEEL POSTS SHOWN)

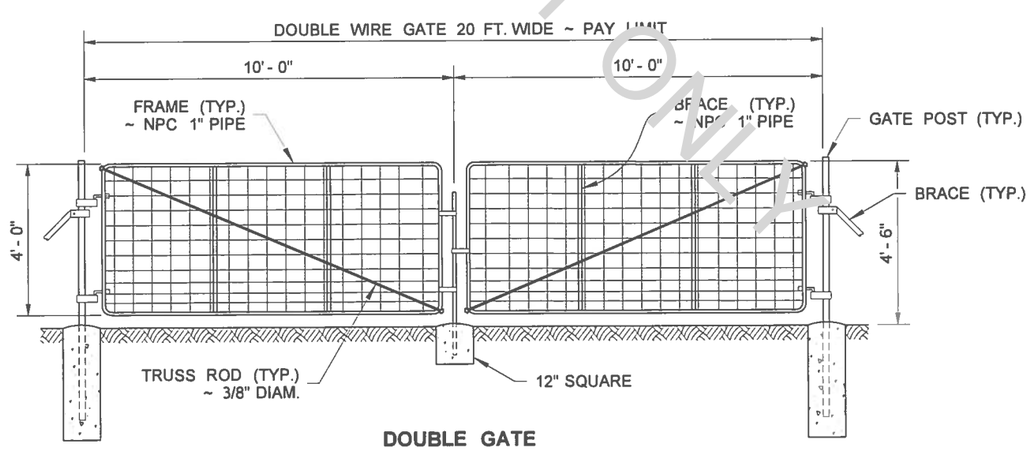

DOUBLE GATE
(STEEL POSTS SHOWN)

GATES

DRAWN BY: BILL BERENS

INFORMATIONAL COPY ONLY

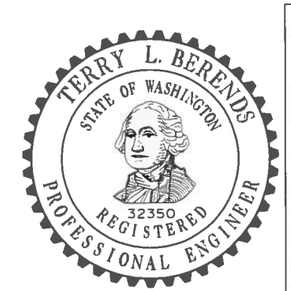

NOTE: THIS PLAN IS NOT A LEGAL ENGINEERING DOCUMENT BUT AN ELECTRONIC DUPLICATE. THE ORIGINAL, SIGNED BY THE ENGINEER AND APPROVED FOR PUBLICATION, IS KEPT ON FILE AT THE WASHINGTON STATE DEPARTMENT OF TRANSPORTATION. A COPY MAY BE OBTAINED UPON REQUEST.

WIRE FENCE TYPES 1 & 2 AND WIRE GATES

STANDARD PLAN L-10.10-01

SHEET 2 OF 2 SHEETS

APPROVED FOR PUBLICATION

Pasco Bakotich III — 06-16-11
STATE DESIGN ENGINEER — DATE

Washington State Department of Transportation

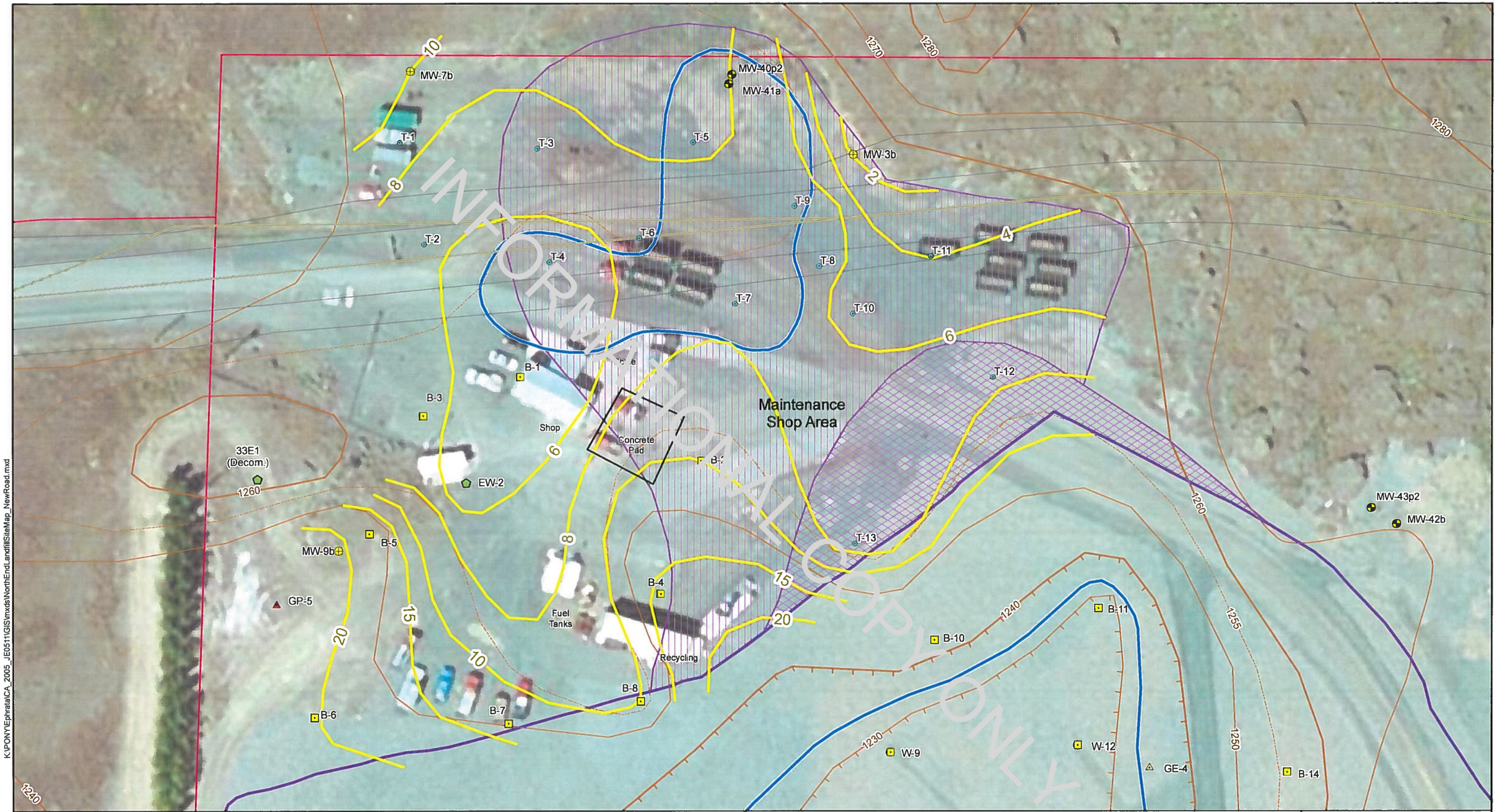

K:\PONY\Ephrata\CA_2005_JE0511\GIS\mxds\NorthEnd\LandfillSiteMap_NewRoad.mxd

- Quarterly Monitoring Well (MW)
- Remedial Investigation Monitoring Well (MW)
- Gas Extraction (GE)
- Gas Probe (GP)
- Other Wells

Soil Sample Locations
- Boring
- Test Pits

- Capped Unlined Landfill Extent
- Approximate Area of Landfill Refuse Not Capped
- Approximate Area of Contaminated Soils Not Capped
- Approximate Extent of Saturation Above Bedrock
- County Owned Parcels

- Soil Thickness Contours (feet)

Top of Basalt Elevation Contours
- 20-foot Contour
- 10-foot Contour
- 20-foot Depression Contour
- 10-foot Depression Contour

0 Feet 50

June 2011 Bing Aerial Photo

N

Figure 1
North End of Ephrata Landfill Soil Thickness

Ephrata Landfill
RIFS

PgG

VOCs		B-1-4.5	B-4-16	B-5-20	B-6-20	B-7-14	B-8-4.5	B-9-15 (W-9)	B-9-30 (W-9)	B-10-9	B-10-15	B-11-9	B-11-38	B-12-10 (W-12)	B-12-48 (W-12)	B-13-7	B-13-37	B-14-28	B-15-31	B-15-36	B-16-14	B-16-24
1,1-Dichloroethane	mg/kg	U	U	U	U	U	U	U	U	U	U	U	U	U	U	U	U	U	U	U	U	U
1,1-Dichloroethene	mg/kg	U	U	U	U	U	U	U	U	U	U	U	U	U	U	U	U	U	U	U	U	U
1,2-Dichlorobenzene	mg/kg	U	U	U	U	U	U	U	U	U	U	U	U	U	U	U	U	U	U	U	U	U
1,2-Dichloroethane	mg/kg	U	U	U	U	U	U	U	U	U	U	U	U	U	U	U	U	U	U	U	U	U
1,2-Dichloropropane	mg/kg	U	U	U	U	U	0.0038	U	U	U	U	U	U	U	U	U	U	U	U	U	U	U
1,4-Dichlorobenzene	mg/kg	U	U	U	U	U	U	0.01	U	0.0018	0.002	0.016	U	U	U	U	U	U	0.13	0.0029	0.0021	U
Benzene	mg/kg	U	U	U	U	U	0.012	0.0024	0.0084	0.0092	0.073	U	0.04	U	U	U	0.086	0.0071	U	0.016	U	U
Chloroethane	mg/kg	U	U	U	U	[illegible]	U	U	U	0.0023	U	U	U	U	U	U	U	0.003	U	U	U	U
Chloromethane	mg/kg	U	U	U	U	[illegible]	U	U	U	U	U	U	U	U	U	U	U	U	U	U	U	U
cis-1,2-Dichloroethene	mg/kg	U	U	U	U	U	0.043	U	0.0067	0.0029	0.039	U	0.007	U	U	U	0.0074	0.049	U	0.0042	U	U
Ethylbenzene	mg/kg	U	U	U	U	[illegible]	[illegible].0065	0.057	0.0039	0.024	0.023	0.012	0.0052	0.22	0.9	U	0.011	0.004	0.29	0.018	0.0084	U
Methylene chloride	mg/kg	0.0023	U	0.0035	0.005	0.00[illegible]	U	0.005	U	U	U	U	U	U	U	U	0.0055	U	0.14	0.0038	U	U
o-Xylene	mg/kg	U	U	U	U	U	[illegible].0056	0.033	0.0043	0.024	0.026	0.004	0.0064	0.2	1.1	U	0.0043	0.0054	0.15	0.025	0.0066	0.0033
Tetrachloroethene (PCE)	mg/kg	U	U	U	U	U	0.019	U	0.0047	U	U	U	0.0021	U	U	U	0.01	0.0014	U	0.0031	U	U
Toluene	mg/kg	U	U	U	U	U	0.016	0.01	0.0064	0.015	0.041	U	0.021	0.33	3.2	0.18	0.04	0.0096	U	0.017	0.0071	0.0013
trans-1,2-Dichloroethene	mg/kg	U	U	U	U	U	U	U	U	U	0.0015	U	U	U	U	U	U	0.0019	U	U	U	U
Trichloroethene (TCE)	mg/kg	U	U	U	U	U	0.015	[illegible]	0.002	U	0.0029	U	0.0019	U	U	U	0.0026	0.0032	U	U	U	U
Trichlorofluoromethane (CFC 11)	mg/kg	U	U	U	U	U	U	[illegible]	U	U	U	U	U	U	U	U	U	U	U	U	U	U
Vinyl chloride	mg/kg	U	U	U	U	U	0.069	U	0.033	U	0.011	U	0.0085	U	U	U	0.058	0.069	U	0.02	U	0.0025
Xylene isomers, M+P	mg/kg	U	U	U	U	U	0.016	[illegible].15	0.0074	0.047	0.03	0.016	0.01	0.48	4.4	0.097	0.01	0.0052	0.6	0.031	0.015	0.0016

Inorganics		B-1-4.5	B-4-16	B-5-20	B-6-20	B-7-14	B-8-4.5	B-9-15	B-9-[illegible]	B-10-9	B-10-15	B-11-9	B-11-38	B-12-10	B-12-48	B-13-7	B-13-37	B-14-28	B-15-31	B-15-36	B-16-14	B-16-24
Arsenic, total	mg/kg	2.8	0.8	1.2	0.5	0.8	14.4	1.8	1.4	2	17.3	0.7	6.2	2	8.4	1.2	8.2	3.4	1.7	3.7	0.9	1.1
Iron, total	mg/kg	27400	36900	34100	35500	36200	59400	30700	38500	39500	132000	26900	65100	25800	58000	30500	75500	70200	34300	49500	29400	33400
Manganese, total	mg/kg	385	434	371	396	389	378	359	39[illegible]	146	867	296	937	233	561	298	704	750	395	498	346	391
Chloride	mg/kg	241	144	220	142	180	410	572	163	02	744	77.6	582	1150	550	366	427	547	638	411	1850	164
Sulfate	mg/kg	828	693	930	677	822	2540	343	241	38[illegible]	152	421	1180	16700	1090	679	1270	681	909	985	112	506
Nitrate	mg/kg	4.37	2.38	0.9	0.73	4.14	U	U	0.56	0.2[illegible]	U	U	U	U	U	U	U	U	U	U	U	U
Nitrate+Nitrite	mg/kg	4.37	2.38	0.9	0.73	4.14	U	U	0.56	0.2[illegible]	U	U	U	U	U	U	U	U	U	U	U	U
Nitrite	mg/kg	U	U	U	U	U	U	U	U	U	U	U	U	U	U	U	U	U	U	U	U	U
Total solids	%	70.1	95.4	96.4	96.6	96.1	76.2	78.1	94.1	85.1	71.1	88.6	90.9	76.6	89.3	92.9	91.6	85.9	86.6	88.8	91.5	92.5

Red = soil boring samples collected from soils by shop that were not capped and that were ***not*** delineated as contaminated by the shop (See Figure 2)

Green = soil boring samples collected in refuse now capped

Not analyzed						
	B-4-1	B-9-25	B-11-25	B-13-19	B-14-5	B-16-19
	B-4-3	B-9-34	B-11-32	B-13-24	B-14-15	
	B-4-5	B-9-38	B-11-44	B-13-29	B-14-23	
	B-5-14	B-10-7	B-11-46.5	B-13-44	B-15-14	
	B-6-8	B-10-20	B-12-15	B-13-46	B-15-22	
	B-9-20	B-11-20	B-12-30	B-13-54	B-16-8	

INFORMATIONAL COPY ONLY

VOCs		T-1-9.5	T-2-6.5	T-3-7.3	T-4-4	T-5-7	T-5-7.2	T-5-8	T-6-4	T-7-2.3	T-8-4	T-9-6.4	T-10-4.2	T-11-4	T-12-5	T-12-5.5	T-12-7	T-13-4	T-13-5.5	T-13-6
1,1-Dichloroethane	mg/kg	U	U	U	U	U	U	U	U	U	U	U	U	U	U	U	U	U	U	U
1,1-Dichloroethene	mg/kg	U	U	U	U	U	U	U	U	U	U	U	U	U	U	U	U	U	U	U
1,2-Dichlorobenzene	mg/kg	U	U	U	U	U	U	U	U	U	U	U	U	U	U	U	U	U	U	U
1,2-Dichloroethane (EDC)	mg/kg	U	U	U	U	U	U	U	U	U	U	U	U	U	U	U	U	U	U	U
1,2-Dichloropropane	mg/kg	U	U	U	U	U	U	U	U	U	U	U	U	U	U	U	U	U	U	U
1,4-Dichlorobenzene	mg/kg	U	U	U	U	U	U	U	U	U	U	U	U	U	U	U	U	2.2	1.5	0.049
Benzene	mg/kg	U	U	U	0.0052	U	U	U	0.014	0.0079	0.0016	U	0.017	0.01	U	U	0.23	U	U	0.0062
Chloroethane	mg/kg	U	U	U	U	U	U	U	U	U	U	U	U	U	U	U	U	U	U	U
Chloromethane	mg/kg	U	U	U	U	U	U	U	U	U	U	U	U	U	U	U	U	U	U	U
cis-1,2-Dichloroethene	mg/kg	U	U	U	U	0.8	1	0.047	U	U	U	U	U	U	U	U	U	U	2.8	0.028
Ethylbenzene	mg/kg	U	U	U	U	U	U	U	0.0016	U	U	U	0.0014	0.0026	0.39	0.26	0.42	0.11	1	0.012
Methylene chloride	mg/kg	0.0026	0.0027	U	U	U	U	U	U	U	U	U	U	U	U	U	U	U	U	U
o-Xylene	mg/kg	U	U	U	U	U	U	U	U	U	U	U	U	U	0.21	U	0.15	0.15	1.4	0.012
Tetrachloroethene (PCE)	mg/kg	U	U	U	U	U	U	U	0.047	0.0025	0.0013	U	0.008	0.011	U	U	U	0.36	4	0.033
Toluene	mg/kg	U	U	U	0.0015	U	U	U	0.0072	0.0037	0.0014	U	0.0081	0.0093	0.09	0.15	0.26	0.1	2.3	0.021
trans-1,2-Dichloroethene	mg/kg	U	U	U	U	U	U	U	U	U	U	U	U	U	U	U	U	U	U	U
Trichloroethene (TCE)	mg/kg	U	U	U	U	0.95	1.1	0.33	U	U	U	U	U	U	U	U	0.13	U	0.63	0.0032
Trichlorofluoromethane (CFC 11	mg/kg	U	U	U	U	U	U	U	U	U	U	U	U	U	U	U	U	U	U	U
Vinyl chloride	mg/kg	U	U	U	U	U	U	U	[illegible]	U	U	U	U	U	U	U	U	U	0.28	0.0033
Xylene isomers, M+P	mg/kg	U	U	U	U	U	U	U	0.0025	0.002	U	U	U	0.0014	0.37	0.23	0.4	0.26	2.7	0.022

Inorganics		T-1-9.5	T-2-6.5	T-3-7.3	T-4-4	T-5-7	T-5-7.2	T-5-8	T-6-4	T-7-2.3	T-8-4	T-9-6.4	T-10-4.2	T-11-4	T-12-5	T-12-5.5	T-12-7	T-13-4	T-13-5.5	T-13-6
Arsenic, total	mg/kg	0.8	1.7	2.6	5.4	4.6	3.4	8.8	14.8	[illegible]	3.8	2.6	2.8	6.6	1.5	4.4	8.3	1.7	4.3	0.8
Iron, total	mg/kg	36200	34000	28700	24600	74900	35800	38400	95200	25700	52600	35900	48400	52000	31800	57700	98700	43300	27000	56600
Manganese, total	mg/kg	419	431	375	390	560	443	450	607	566	521	461	535	514	334	497	1880	477	292	611
Chloride	mg/kg	U	U	95.9	U	266	117	65.5	51.2	116	[illegible]	10.6	32.5	38.8	222	122	120	151	298	220
Sulfate	mg/kg	45.5	37.9	158	16200	668	551	367	746	19400	[illegible]	30.4	1560	7900	369	482	326	258	305	490
Nitrate	mg/kg	0.26	0.61	20.9	10.9	U	0.68	5.64	2.21	77.6	[illegible]	1.29	65.3	37	0.21	U	U	0.82	U	U
Nitrate+Nitrite	mg/kg	0.26	0.61	21.1	11.1	U	0.83	5.8	2.21	78.1	[illegible]	[illegible]	65.6	37.2	0.21	U	U	1.01	U	U
Nitrite	mg/kg	U	U	0.17	0.16	U	0.15	0.16	U	0.52	0.18	[illegible]	0.29	0.2	U	U	U	0.19	U	U
Total Solids	%	96.2	96.8	94.4	82.6	79.4	81.9	83.6	81.5	68.7	87.4	95.4	91.7	92.8	88	85.5	82.4	92.1	82.5	90.2

[1]Data from T-1-9.5 and T-2-6.5 are excluded from calculations because T-1 and T-2 are outside the delineated contaminated area.

[2]In road corridor.

Red = test pit samples collected from soils by shop that were not capped and that were ***not*** delineated as uncapped contaminated soils by the shop (See Figure 2)

Blue = test pit soil samples collected from soils by shop that were not capped and that were delineated as uncapped contaminated soils (see Fig 2)

Yellow = test pit soil samples collected from soils by shop that were not capped and that were delineated as uncapped refuse (see Fig 2)

Not analyzed				
	T-1-3.5	T-5-1	T-5-6	T-8-7.3
	T-2-5	T-5-2	T-5-6.5	T-9-5
	T-3-3	T-5-3.5	T-6-2.8	T-12-2.3
	T-3-5	T-5-5	T-6-7.3	T-12-4
	T-4-2.5	T-5-5.5	T-7-6.5	T-13-2

INFORMATIONAL COPY ONLY

NEVA LAKE ROAD CONSTRUCTION PROJECT

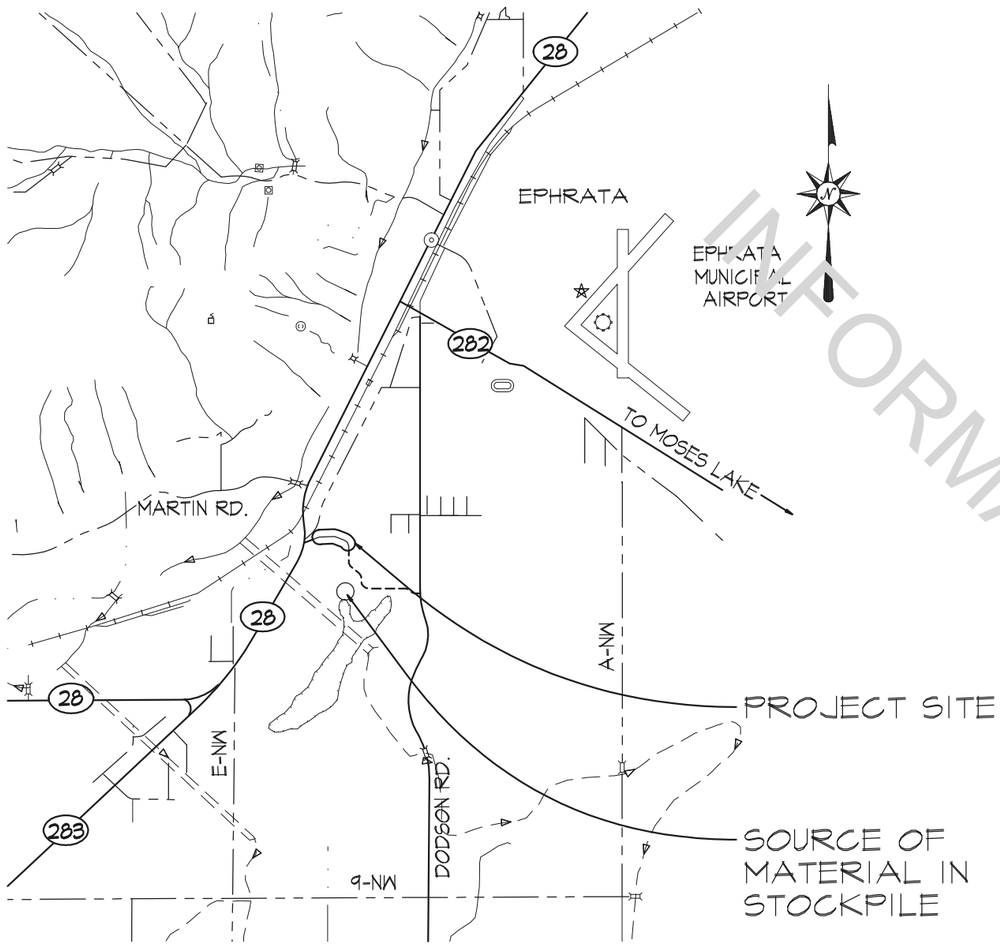

SHEET	DESCRIPTION
1	INDEX & VICINITY MAP
2	SUMMARY OF QUANTITIES
3	STA 24+50 TO STA 35+00
4	STA 35+00 TO STA 51+00
5	CONTAMINATED SOIL REMOVAL AND DISPOSAL SITE
6	TYPICAL X-SECTIONS

INFORMATIONAL COPY ONLY

LEGEND

FENCE LINE — CONTROL POINT

CULVERT — MONITORING WELL

Grant County
Board Of Commissioners

Richard Stevens, District No. 1 (Chair)
Carol Ann Swartz, District No. 2
Cindy Carter, District No. 3

GRANT COUNTY PUBLIC WORKS DEPARTMENT
124 ENTERPRISE ST. SE
EPHRATA, WASHINGTON 98823
(509) 754-6082 FAX (509) 754-6087

NEVA LAKE ROAD CONSTRUCTION PROJECT

CRP 10-06

DESIGNED BY:	BOB BERSANTI
DRAWN BY:	BOB BERSANTI
CHECKED BY:	DEREK POHLE
REVISIONS BY:	
DATE REVISED:	
FEDERAL AID NO.:	

DEREK POHLE — STATE OF WASHINGTON — 32963 — REGISTERED PROFESSIONAL ENGINEER

SUMMARY OF QUANTITIES

ITEM NO.	TOTAL QUANTITY	UNIT	ITEM DESCRIPTION	CRP 10-06 STA. 24+50 TO STA. 51+00
			PREPARATION	
1	100%	L.S.	Mobilization	100%
2	100%	L.S.	Clearing & Grubbing	100%
			GRADING	
3	10,976	C.Y.	Roadway Excavation Including Haul	10,976
4	6,747	C.Y.	Embankment Compaction	6,747
5	7,500	C.Y.	Borrow Excavation Incl. haul	7,500
6	1,500	C.Y.	Contaminated/Saturated Soil Excavation and Haul	1,500
			DRAINAGE	
7	210	L.F.	Plain Steel Culvert Pipe 0.064" Th. - 12" Diameter	210
			SURFACING	
8	4,200	TON	Crushed Surfacing Base Course from Stockpile	4,200
9	2,700	TON	Maintenance Rock from Stockpile	2,700
			ASPHALT CONCRETE PAVEMENT	
10	1,800	TON	HMA Class 1/2" Incl. PG64-28 Paving Asphalt	1,800
			TRAFFIC	
11	2,650	L.F.	Painted Double Yellow Centerline	2,650
12	5,300	L.F.	Painted Edge Line	5,300
			OTHER ITEMS	
13	100%	L.S.	Spill Prevention, Control, and Countermeasure (SPCC) Plan	100%
14	20	C.Y.	Structure Excavation Class "B" Including Haul	20
15	30	C.Y.	Gravel Backfill For Pipe Zone Bedding	30
16	5	EACH	Monument	5
17	100%	L.S.	Trimming and Cleanup	100%
18	1	ACRE	Seeding, Fertilizing and Mulching with Arid Area Mix A or B	1
19	1,295	L.F.	Wire Fence Type 2	1,295
20	1,275	L.F.	Wire Fence Type Special	1,275
21	100%	EACH	Minor Changes	100%
			ALTERNATE A1	
			GRADING	
22	4,500	C.Y.	Contaminated Soil Excavation and Haul to Landfill	4,500
			ALTERNATE A2	
			GRADING	
23	4,500	C.Y.	Contaminated Soil Excavation and Haul to Stockpile	4,500

INFORMATIONAL COPY ONLY

GRANT COUNTY PUBLIC WORKS DEPARTMENT
124 ENTERPRISE ST. SE
EPHRATA, WASHINGTON 98823
(509) 754-6082 FAX (509) 754-6087

NEVA LAKE ROAD CONSTRUCTION PROJECT

CRP 10-06

DESIGNED BY:	BOB BERSANTI
DRAWN BY:	BOB BERSANTI
CHECKED BY:	DEREK POHLE
REVISIONS BY:	
DATE REVISED:	
FEDERAL AID NO.:	

DEREK POHLE STATE OF WASHINGTON 32963 REGISTERED PROFESSIONAL ENGINEER

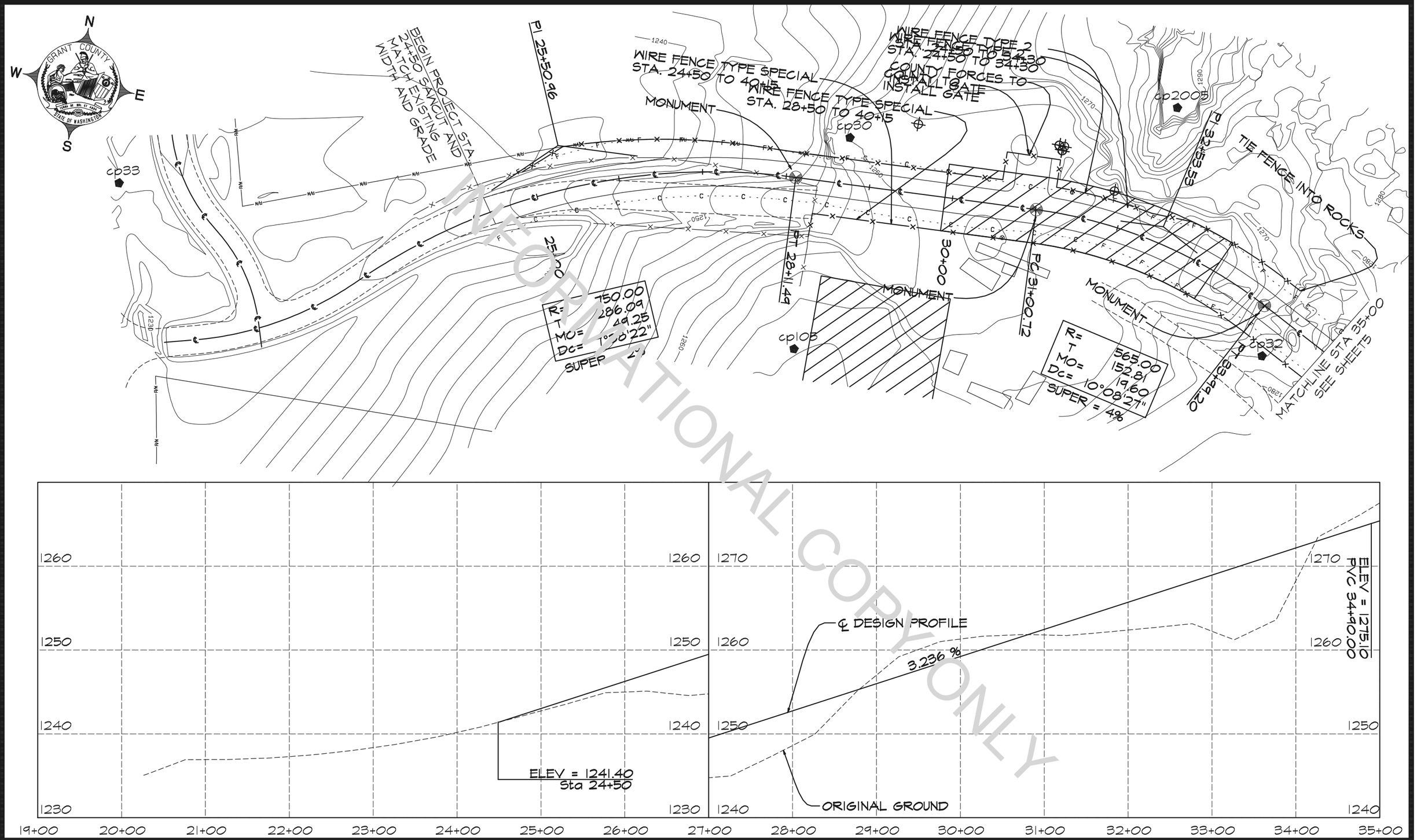

GRANT COUNTY PUBLIC WORKS DEPARTMENT

124 ENTERPRISE ST. SE

EPHRATA, WASHINGTON 98823

(509) 754-6082 FAX (509) 754-6087

NEVA LAKE ROAD CONSTRUCTION PROJECT

0 50 100 200

SCALE (in feet)

CRP 10-06

DESIGNED BY:	BOB BERSANTI
DRAWN BY:	BOB BERSANTI
CHECKED BY:	DEREK POHLE
REVISIONS BY:	
DATE REVISED:	
FEDERAL AID NO.:	

DEREK POHLE
STATE OF WASHINGTON
32963
REGISTERED
PROFESSIONAL ENGINEER

CONTRACTOR MAY DISPOSE OF LARGE BOULDERS NORTH OF ROADWAY, BETWEEN STATIONS 34+00 AND 40+00, A MINIMUM OF 30' FROM CENTERLINE.

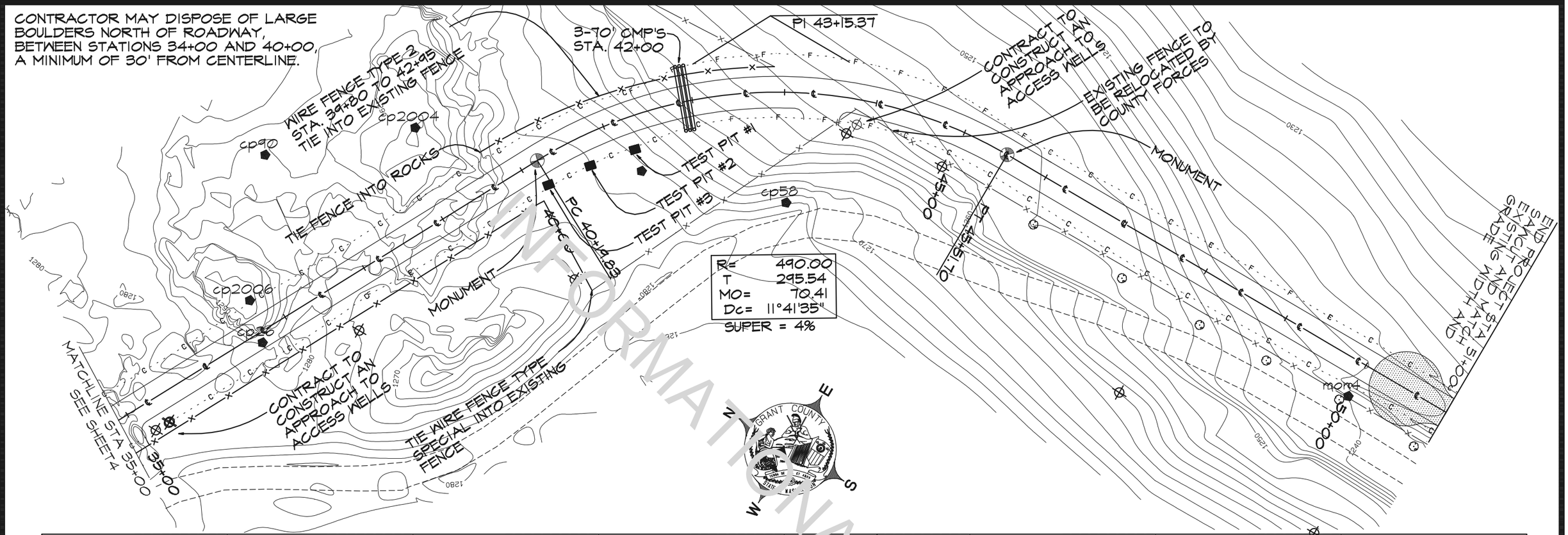

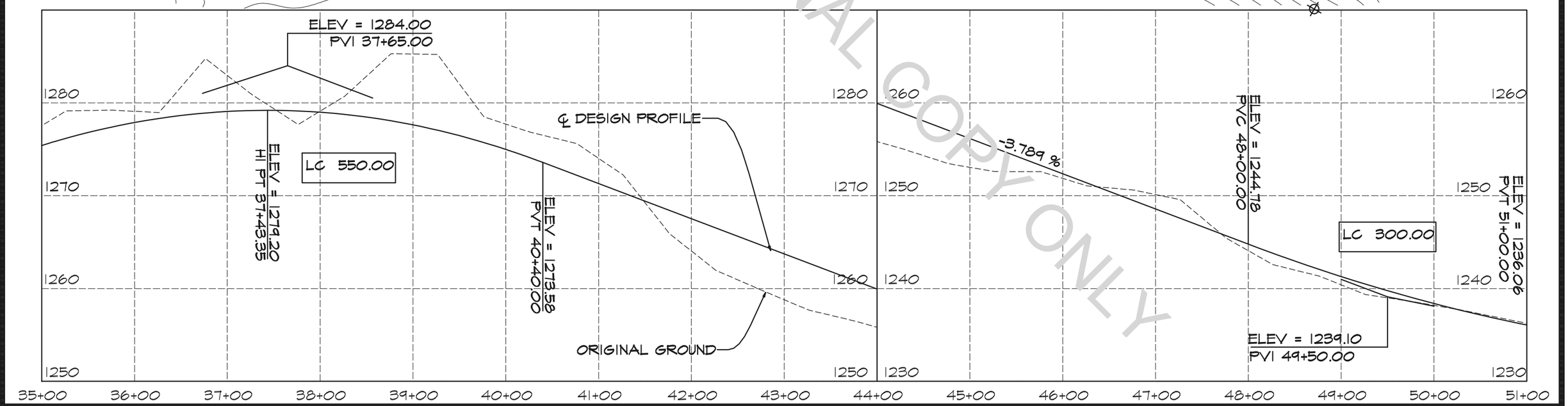

INFORMATIONAL COPY ONLY

GRANT COUNTY PUBLIC WORKS DEPARTMENT

124 ENTERPRISE ST. SE

EPHRATA, WASHINGTON 98823

(509) 754-6082 FAX (509) 754-6087

NEVA LAKE ROAD CONSTRUCTION PROJECT

0 50 100 200

SCALE (in feet)

CRP 10-06

DESIGNED BY:	BOB BERSANTI
DRAWN BY:	BOB BERSANTI
CHECKED BY:	DEREK POHLE
REVISIONS BY:	
DATE REVISED:	
FEDERAL AID NO.:	

DEREK POHLE
STATE OF WASHINGTON
32963
REGISTERED
PROFESSIONAL ENGINEER

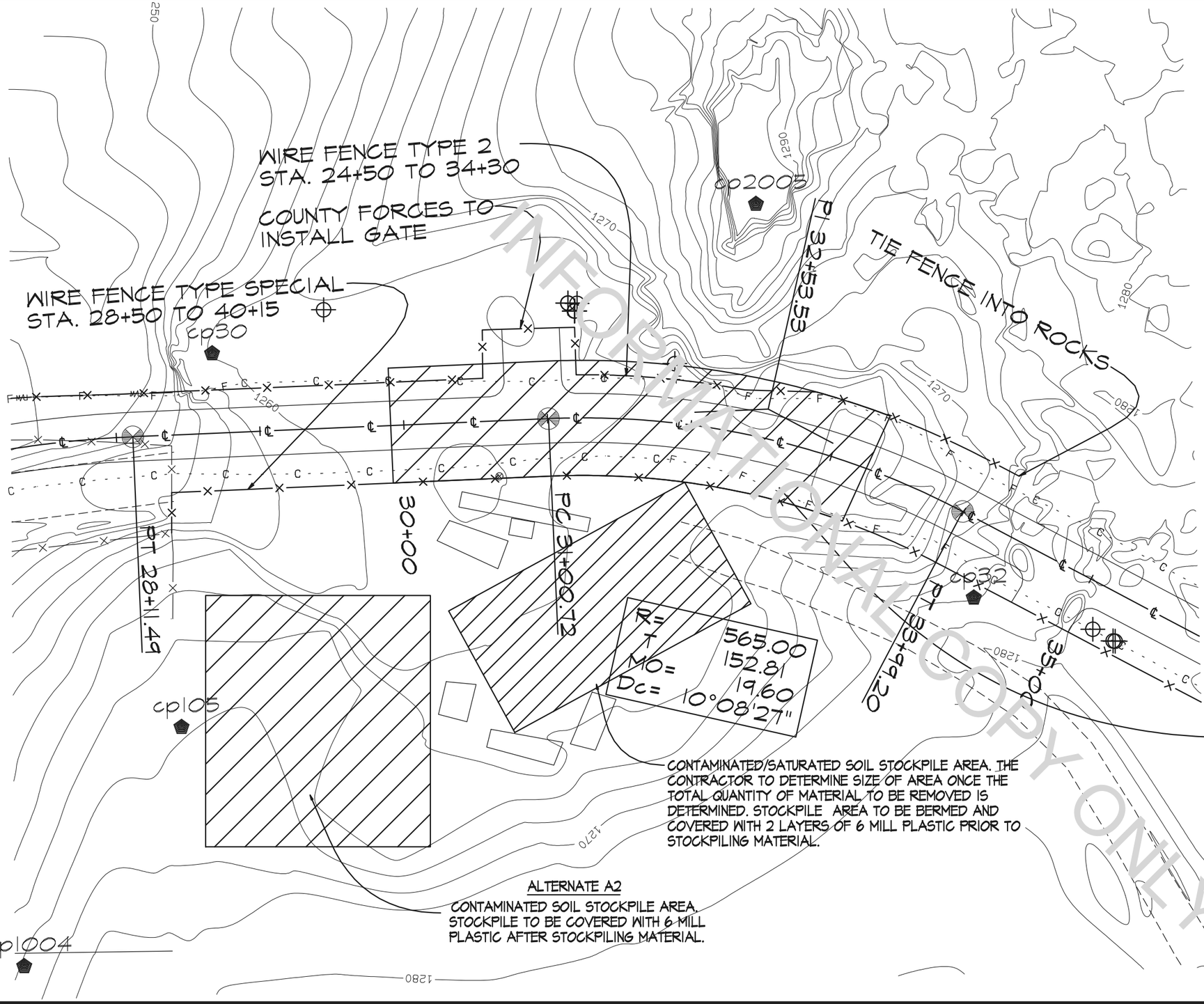

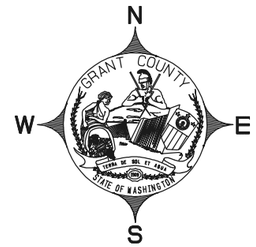

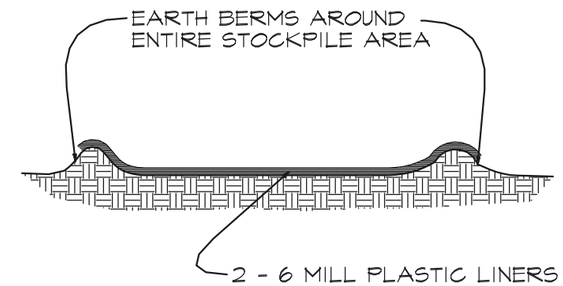

CONTAMINATED/SATURATED SOIL STOCKPILE AREA

CONTAMINATED/SATURATED SOIL STOCKPILE AREA. THE CONTRACTOR TO DETERMINE SIZE OF AREA ONCE THE TOTAL QUANTITY OF MATERIAL TO BE REMOVED IS DETERMINED. STOCKPILE AREA TO BE BERMED AND COVERED WITH 2 LAYERS OF 6 MILL PLASTIC PRIOR TO STOCKPILING MATERIAL.

REMOVE CONTAMINATED SOIL DOWN TO BEDROCK, 40' EITHER SIDE OF CENTERLINE BETWEEN STA. 30+00 AND STA. 33+35. APP. 6,000 CY OF MATERIAL. SEE PGG FIGURE NO. 1

ALTERNATE A1
CONTAMINATED SOIL TO BE HAULED TO LANDFILL LOCATED APPROXIMATELY 3,500' SOUTH AND PLACED AS DIRECTED BY THE LANDFILL OPERATIONS MANAGER

ALTERNATE A2
CONTAMINATED SOIL STOCKPILE AREA. STOCKPILE TO BE COVERED WITH 6 MILL PLASTIC AFTER STOCKPILING MATERIAL.

INFORMATIONAL COPY ONLY

GRANT COUNTY PUBLIC WORKS DEPARTMENT
124 ENTERPRISE ST. SE
EPHRATA, WASHINGTON 98823
(509) 754-6082 FAX (509) 754-6087

NEVA LAKE ROAD CONSTRUCTION PROJECT

CRP 10-06

DESIGNED BY:	BOB BERSANTI
DRAWN BY:	BOB BERSANTI
CHECKED BY:	DEREK POHLE
REVISIONS BY:	
DATE REVISED:	
FEDERAL AID NO.:	

DEREK POHLE
STATE OF WASHINGTON
32963
REGISTERED
PROFESSIONAL ENGINEER

ROADWAY SECTION "A"

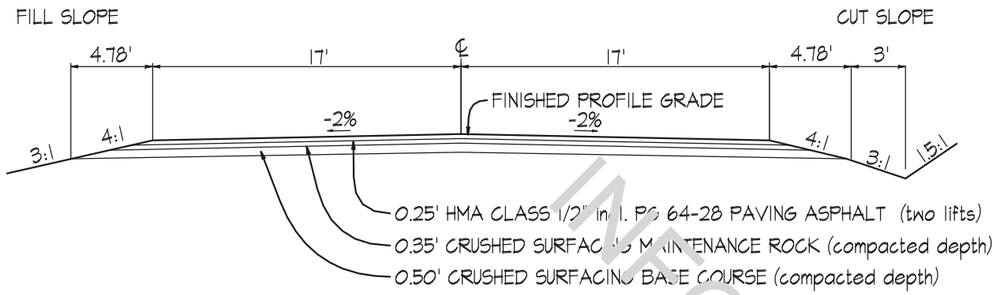

TRANSITION EXISTING ROADWAY STA. 24+50 TO SECTION 'A' STA. 25+00
STA. 25+00 TO STA. 34+00
TRANSITION ROADWAY SECTION 'A' STA. 34+00 TO SECTION 'B' STA. 34+50
STA. 41+50 TO 51+00

TYPICAL APPROACH DETAIL

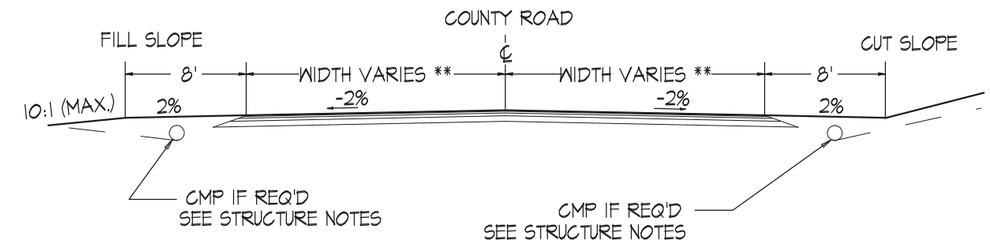

** SEE PLANS FOR APPROACH WIDTHS

ROADWAY SECTION "B"

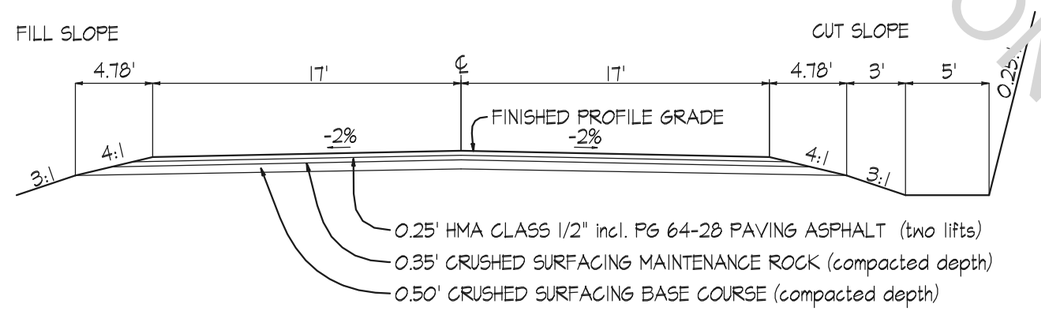

STA. 34+50 TO STA. 41+00
TRANSITION ROADWAY SECTION 'B' STA. 41+00 TO SECTION 'A' STA. 41+50

TYPICAL APPROACH

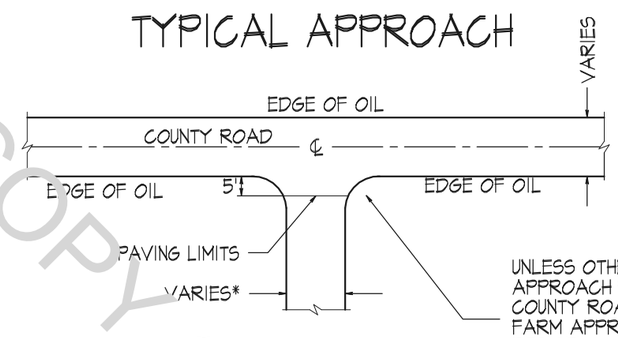

UNLESS OTHERWISE NOTED ON THE PLANS
APPROACH RADII WILL BE AS FOLLOWS:
COUNTY ROAD 30' RADIUS
FARM APPROACH 15' RADIUS
RESIDENTIAL APPROACH 10' RADIUS
COMMERCIAL APPROACH 20' RADIUS

LOCATIONS: SEE STRUCTURE NOTES

INFORMATIONAL COPY ONLY

GRANT COUNTY PUBLIC WORKS DEPARTMENT
124 ENTERPRISE ST. SE
EPHRATA, WASHINGTON 98823
(509) 754-6082 FAX (509) 754-6087

NEVA LAKE ROAD CONSTRUCTION PROJECT

CRP 10-06

DESIGNED BY:	BOB BERSANTI
DRAWN BY:	BOB BERSANTI
CHECKED BY:	DEREK POHLE
REVISIONS BY:	
DATE REVISED:	
FEDERAL AID NO.:	

DEREK POHLE
STATE OF WASHINGTON
32963
REGISTERED
PROFESSIONAL ENGINEER