Grant County Building Department

(509) 754-2011 ext. 344 or 320

Basic Deck Structure

To use this handout as your plans, fill in the blanks and follow directions on this page and following pages. All decks and landings under 30" in height do not require a permit.

Roof Cover over Deck?

Yes _____ No _____

If Yes, fill out and attach Roof Covers Handout.

Deck Style: (check one)

Freestanding _____

Attached to structure _____

Note: Decks and Roof Covers for Manufactured Homes must be freestanding.

DECK SIZE: List all decks or portions thereof from Page 2

① _____ x _____ = _____ sq.ft.

② _____ x _____ = _____ sq.ft.

③ _____ x _____ = _____ sq.ft.

④ _____ x _____ = _____ sq.ft.

Total Deck Area: _____ sq.ft.

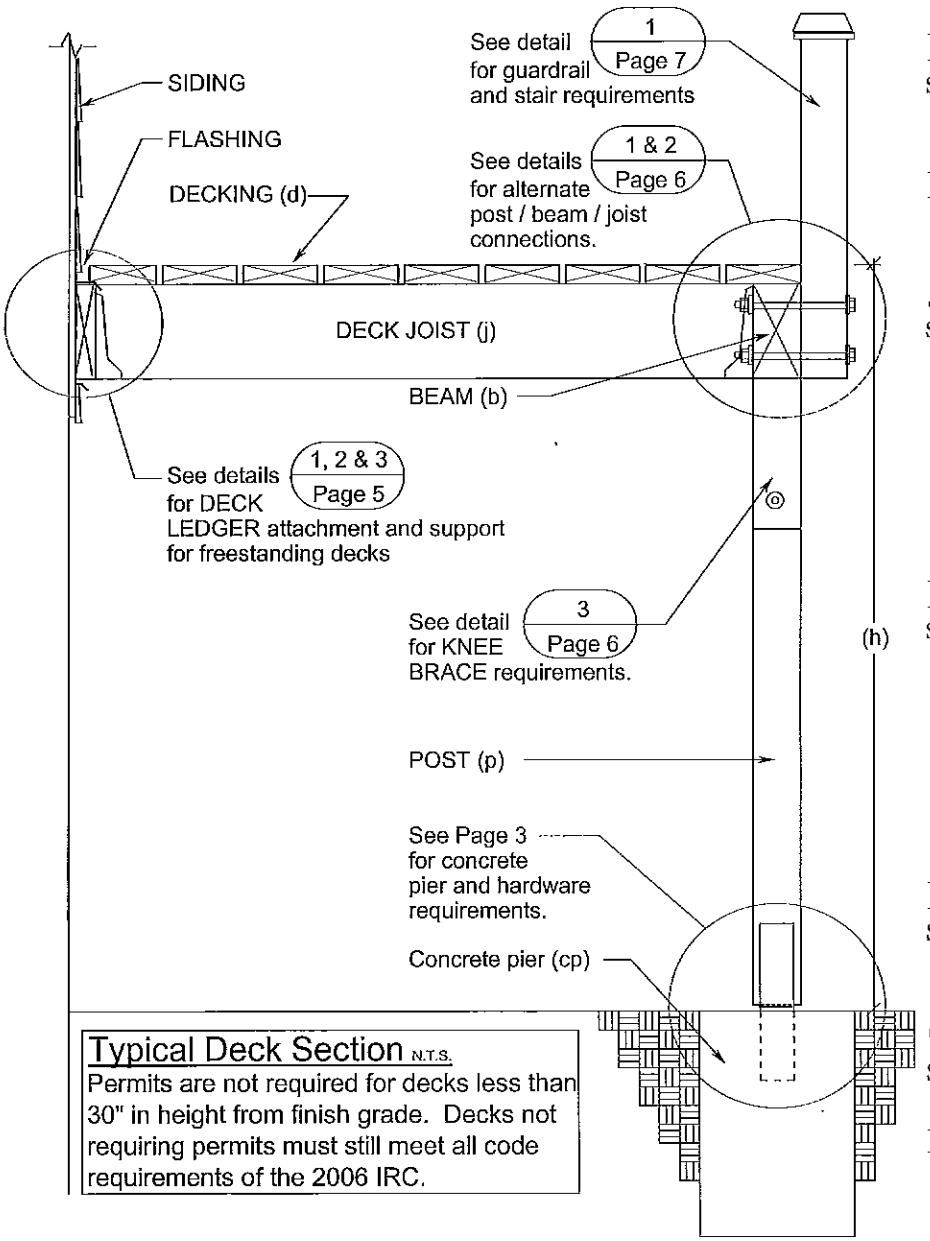

Typical Deck Section N.T.S.

Permits are not required for decks less than 30" in height from finish grade. Decks not requiring permits must still meet all code requirements of the 2006 IRC.

DECK HEIGHT(h): _____

See Post Schedule on Page 3 for allowable height.

DECKING(d): _____

JOIST SIZE(j): _____

See Span Tables on Page 4.

Spacing: _____

Span: _____

BEAM SIZE(b): _____

See Span Tables on Page 4.

Spacing: _____

Span: _____

POST SIZE(p): _____

See Post Schedule on Page 3.

CONCRETE PIERS(cp):

See Concrete Pier Schedule on Page 3.

Pier Type: _____

SIZE: _____"x_____"deep

Follow instructions below to draw your deck floor plan. (Attach more plan pages if necessary)

1. Draw the floor plan of all deck structure(s), including all stairway accesses.
2. Number all decks or portions thereof as per the Deck Size list on Page 1.
3. Show all post/pier locations, and beam locations and directions.
4. Show deck joist direction (to include any and all variations of joist direction).
4. Show existing buildings next to all deck areas.

Deck Post and Concrete Pier Schedule

Deck Height	Deck Type	Post/Pier Connection	Post Size(1)	Knee(2) Brace	Post/Pier Hardware(3)	Post/Beam Hardware(3)	Minimum Pier Size(5)(6)
<30" (permit not required)	Free-standing	Column base	4x4	No	Simpson EPB	Simpson BC(4)	12" x 12" x 12"(7)
		Imbedded	4x6	No	-	Simpson BC(4)	12" x 12" x 18"
	Attached	Column base	4x4	No	Simpson EPB	Simpson BC(4)	12" x 12" x 18"
		Imbedded	4x6	No	-	Simpson BC(4)	12" x 12" x 18"
30" - 4'0	Free-standing	Column base	4x4	No	Simpson EPB	Simpson BC(4)	12" x 12" x 12"(7)
		Imbedded	4x6	No	-	Simpson BC(4)	12" x 12" x 18"
	Attached	Column base	4x4	No	Simpson EPB	Simpson BC(4)	12" x 12" x 18"
		Imbedded	4x6	No	-	Simpson BC(4)	12" x 12" x 18"
>4'0 - 6'0	Free-standing	Column base	4x4	Yes	Simpson CB	Simpson AC	12" x 12" x 18"
		Imbedded	4x6	No	-	Simpson AC	12" x 12" x 18"
	Attached	Column base	4x4	Yes	Simpson CB	Simpson AC	12" x 12" x 18"
		Imbedded	4x6	No	-	Simpson AC	12" x 12" x 18"
>6'0 - 8'0	Free-standing	Column base	4x4	Yes	Simpson CB	Simpson AC	18" x 18" x 24"
		Imbedded	4x6	No	-	Simpson AC	18" x 18" x 24"
	Attached	Column base	4x4	Yes	Simpson CB	Simpson AC	18" x 18" x 24"
		Imbedded	4x6	No	-	Simpson AC	18" x 18" x 24"
>8'0 -10'0	Free-standing	Column base	6x6	Yes	Simpson CB	Simpson AC	18" x 18" x 24"
		Imbedded	6x6	No	-	Simpson AC	G.C.Pole Bldg.(8)
	Attached	Column base	6x6	Yes	Simpson CB	Simpson AC	18" x 18" x 24"
		Imbedded	6x6	No	-	Simpson AC	G.C.Pole Bldg.(8)
>10'0-12'0	Free-standing	Column base	N/A	N/A	N/A	N/A	N/A
		Imbedded	6x6	No	-	Simpson CC	G.C.Pole Bldg.(8)
	Attached	Column base	N/A	N/A	N/A	N/A	N/A
		Imbedded	6x6	No	-	Simpson CC	G.C.Pole Bldg.(8)

1) Minimum nominal postsize required.
2) See Detail 3 on Page 6 for knee brace requirements.
3) The Simpson hardware listed is required as a minimum or provide equal. All hardware shall be installed with maximum fasteners as per manufacturers specs.
4) Additional connection is needed where beam splices occur. This hardware may also be substituted with solid 2x wood gussets.
5) Bottom of all frost protected piers must be a minimum of 18" below grade.
6) Pier size assumes 2,000 p.s.f. soil bearing pressure.
7) These piers are not required to be frost-protected. Precast pier blocks w/saddles may be substituted for these piers
8) These piers sized according to Grant County Pole Building Guidelines.

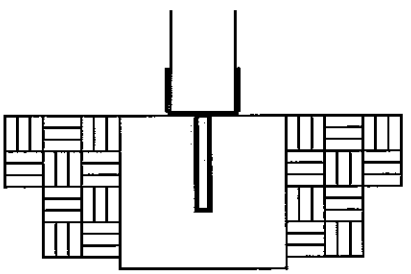

Non-Frost Protected
w/ EPB Column Base(1)

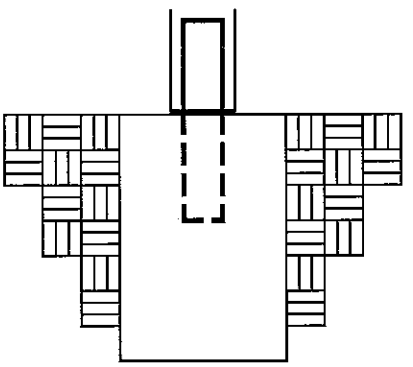

Frost-Protected
w/ CB Column Base

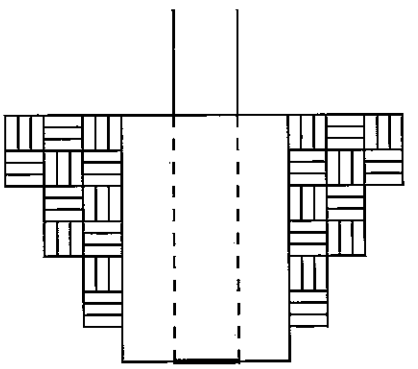

Frost-Protected
w/ Post Imbedded

Joist and Beam Span Table

Span Tables based on the use of No.2 Hem-Fir or better
50 p.s.f. loading (10 p.s.f. Dead Load + 40 p.s.f. Live Load)
Joist and Beam spans assume maximum 24" overhang

Joist Size(1)	Spacing of Joists	Maximum Span of Joists	Maximum Span of Deck Beams between Posts(2)			
			4x6	4x8	4x10	4x12
2x6	12" o.c.	10 ft.- 0 in.	5 ft.- 1 in.	6 ft.- 9 in.	8 ft.- 3 in.	9 ft.- 7 in.
	16" o.c.	9 ft.- 1 in.	5 ft.- 4 in.	7 ft.- 1 in.	8 ft.- 8 in.	10 ft.- 1 in.
	24" o.c.	7 ft.- 11 in.	5 ft.- 8 in.	7 ft.- 6 in.	9 ft.- 3 in.	10 ft.- 9 in.
2x8	12" o.c.	13 ft.- 2 in.	4 ft.- 6 in.	5 ft.- 11 in.	7 ft.- 3 in.	8 ft.- 5 in.
	16" o.c.	12 ft.- 0 in.	4 ft.- 8 in.	6 ft.- 2 in.	7 ft.- 6 in.	8 ft.- 9 in.
	24" o.c.	10 ft.- 2 in.	5 ft.- 1 in.	6 ft.- 9 in.	8 ft.- 3 in.	9 ft.- 7 in.
2x10	12" o.c.	16 ft.- 10 in.	3 ft.- 11 in.	5 ft.- 2 in.	6 ft.- 4 in.	7 ft.- 4 in.
	16" o.c.	15 ft.- 2 in.	4 ft.- 2 in.	5 ft.- 6 in.	6 ft.- 9 in.	7 ft.- 10 in.
	24" o.c.	12 ft.- 5 in.	4 ft.- 7 in.	6 ft.- 0 in.	7 ft.- 4 in.	8 ft.- 7 in.
2x12	12" o.c.	20 ft.- 4 in.	3 ft.- 5 in.	4 ft.- 6 in.	5 ft.- 9 in.	6 ft.- 8 in.
	16" o.c.	17 ft.- 7 in.	3 ft.- 9 in.	4 ft.- 11 in.	6 ft.- 2 in.	7 ft.- 2 in.
	24" o.c.	14 ft.- 4 in.	4 ft.- 3 in.	5 ft.- 7 in.	6 ft.- 10 in.	8 ft.- 0 in.

1) Deck ledgers must be a minimum size of 2x8 nominal and of equal size or larger than the installed joists. See Deck Ledger fastener details on Page 5.
2) Beam sizes other than listed must be approved by the Grant County Building Department before installation.

Construction Materials

1) Joists and Beams shall be minimum Hem-fir #2 & better.
2) Posts must be of naturally durable wood or pressure-treated. All posts imbedded in concrete must be ground contact pressure-treated. See Post and Pier Schedule on Page 3 for required post size.
3) All fasteners (nails, screws, bolts, etc.) and connecting hardware must be corrosion resistant, such as; stainless steel, hot-dipped galvanized, or as specifically required for the specified wood preservative used. All hardware shall be installed as per manufacturers installation instructions and installed with maximum fastener amounts listed.
4) See Post and Pier schedule on Page 3 for post/pier hardware requirements.
5) See Post and Pier schedule on Page 3 for post/beam hardware requirements.

Deck Construction Connections

	Connection	Fastener
1)	Deck ledger to home; at 24" o.c. w/washers and - deck ledger to home: at 16" o.c.	5/8" bolts or lags and - (3) 16d
2)	Joists to deck ledger; hanger size to match joist size.	LU26 min.
3)	Joist to deck beam below; toenail each side.	(3) 8d or (2) 10d
4)	Blocking to joist; toenail each side, each end	(2) 8d
5)	Rim joist to joists; end nail, or toenail each side	(3) 16d, or (3) 8d
6)	Guardrail posts; w/washers	(2) 1/2 bolts
7)	Knee braces using 4x4; each end w/washers.	(1) 1/2" lag
8)	Knee braces using 2x6; each end, each side of post and beam.	(4) 16d

***Note** - Yellow zinc decking screws are not allowed for use in structural components of deck and guardrails.

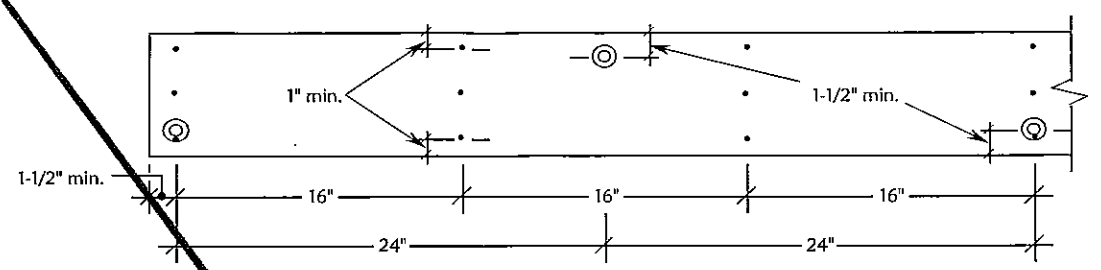

1/5 Deck Ledger Fastener Detail N.T.S.

See detail below for required fasteners

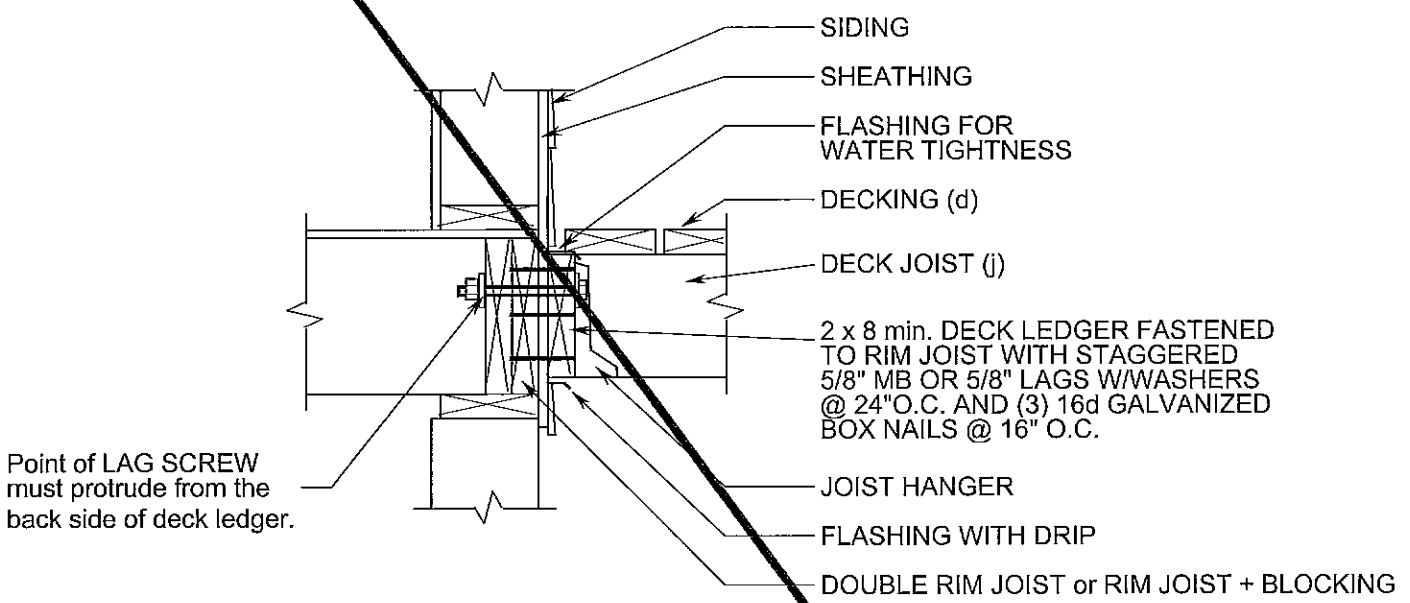

2/5 Attached Deck - Ledger Detail N.T.S.

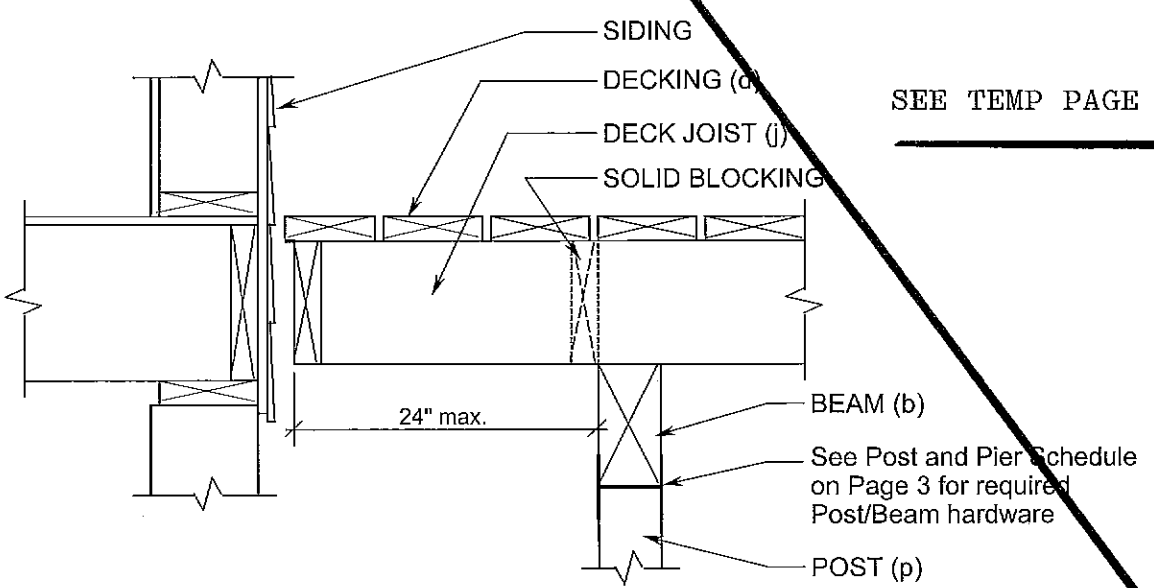

SEE TEMP PAGE 8

3/5 Free-standing Deck Detail N.T.S.

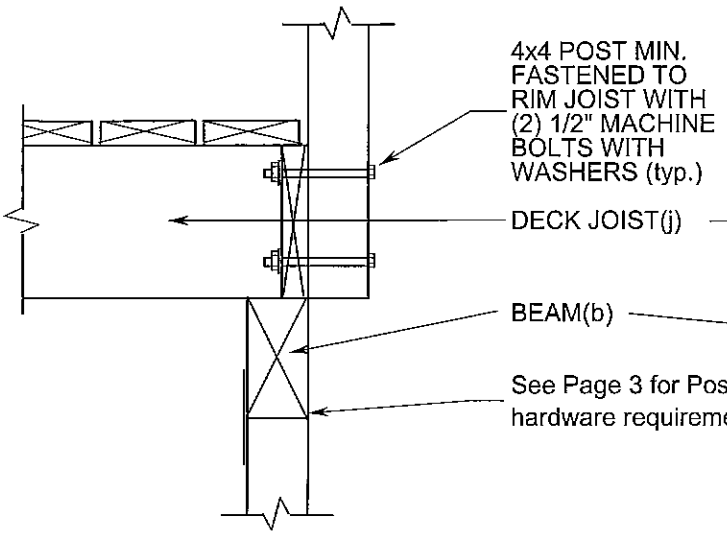

1/6 Alternate Joist/Beam and Guardrail Post Connections

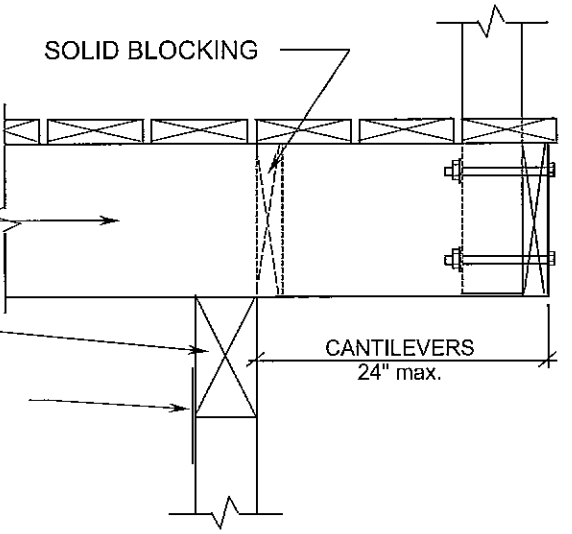

2/6 Alternate Joist/Beam and Guardrail Post Connections

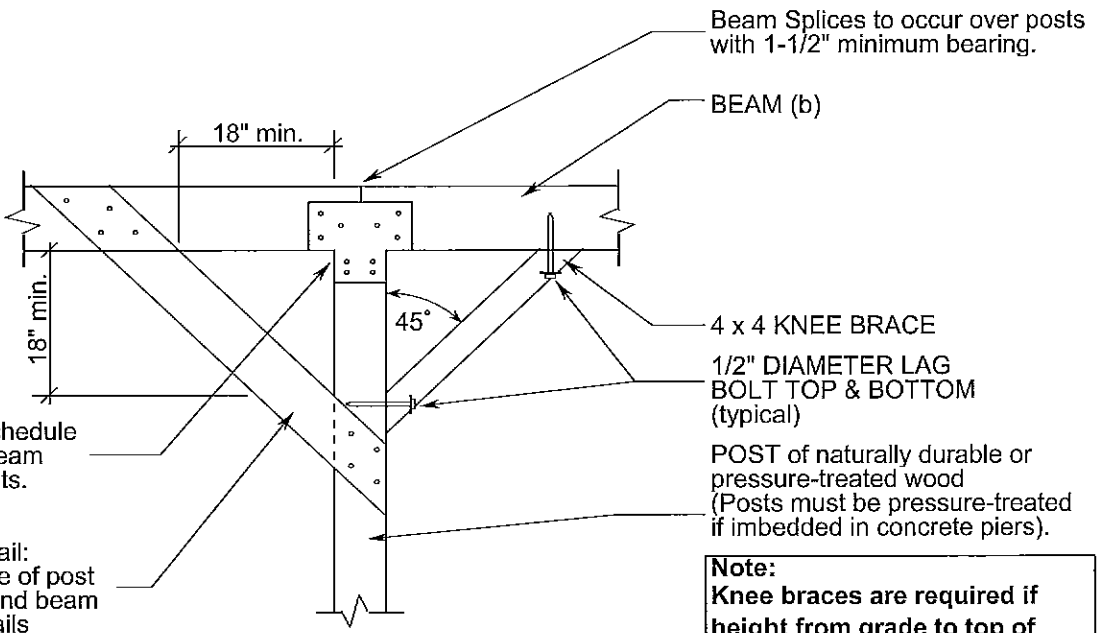

Note:
Knee braces are required if height from grade to top of deck surface exceeds 4'-0". Exception: when posts are imbedded in concrete.

3/6 Post and Knee Brace Detail

When Knee Braces are required on Freestanding decks, they must be installed in both lateral and transverse directions.

Stairs, Handrails and Guardrails Requirements N.T.S.

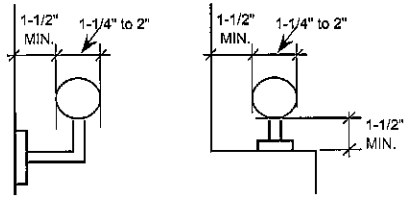

Type I.
Perimeter 4" to 6-1/4"

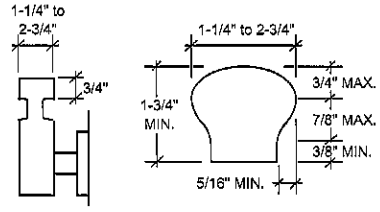

Type II.
Perimeter > 6-1/4"

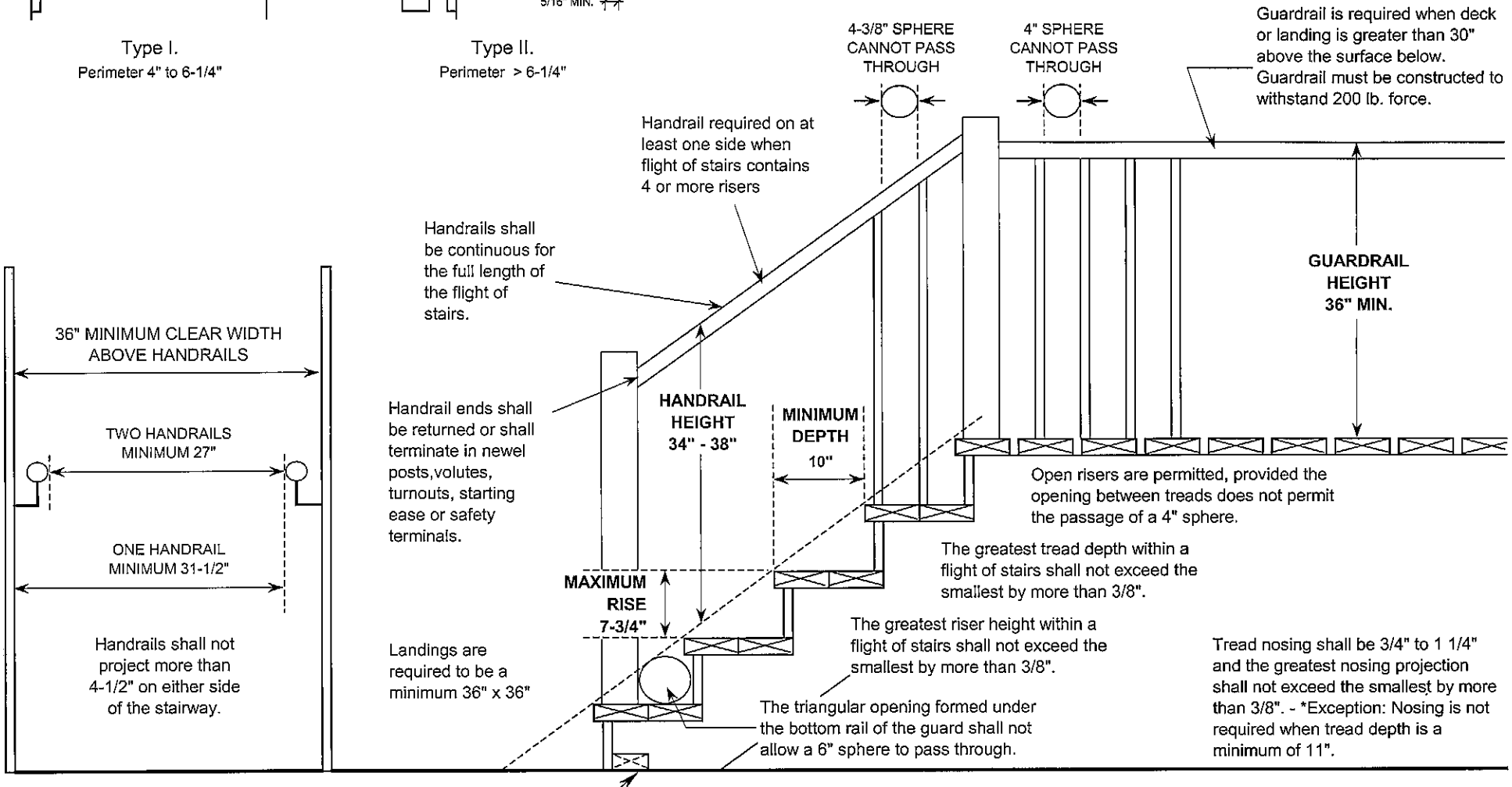

TABLE R502.2.2.1
FASTENER SPACING FOR A SOUTHERN PINE OR HEM-FIR DECK LEDGER AND A 2-INCH NOMINAL SOLID-SAWN SPRUCE-PINE-FIR BAND JOIST[c, f, g]
(Deck live load = 40 psf, deck dead load = 10 psf)

JOIST SPAN	6′ and less	6′1″ to 8′	8′1″ to 10′	10′1″ to 12′	12′1″ to 14′	14′1″ to 16′	16′1″ to 18′
Connection details	On-center spacing of fasteners[d, e]						
$^1/_2$ inch diameter lag screw with $^{15}/_{32}$ inch maximum sheathing[a]	30	23	18	15	13	11	10
$^1/_2$ inch diameter bolt with $^{15}/_{32}$ inch maximum sheathing	36	36	34	29	24	21	19
$^1/_2$ inch diameter bolt with $^{15}/_{32}$ inch maximum sheathing and $^1/_2$ inch stacked washers[b, h]	36	36	29	24	21	18	16

For SI: 1 inch = 25.4 mm, 1 foot = 304.8 mm. 1 pound per square foot = 0.0479kPa.

a. The tip of the lag screw shall fully extend beyond the inside face of the band joist.

b. The maximum gap between the face of the ledger board and face of the wall sheathing shall be $^1/_2$″.

c. Ledgers shall be flashed to prevent water from contacting the house band joist.

d. Lag screws and bolts shall be staggered in accordance with Section R502.2.2.1.1.

e. Deck ledger shall be minimum 2 × 8 pressure-preservative-treated No.2 grade lumber, or other approved materials as established by standard engineering practice.

f. When solid-sawn pressure-preservative-treated deck ledgers are attached to a minimum 1 inch thick engineered wood product (structural composite lumber, laminated veneer lumber or wood structural panel band joist), the ledger attachment shall be designed in accordance with accepted engineering practice.

g. A minimum 1 × $9^1/_2$ Douglas Fir laminated veneer lumber rimboard shall be permitted in lieu of the 2-inch nominal band joist.

h. Wood structural panel sheathing, gypsum board sheathing or foam sheathing not exceeding 1 inch in thickness shall be permitted. The maximum distance between the face of the ledger board and the face of the band joist shall be 1 inch.

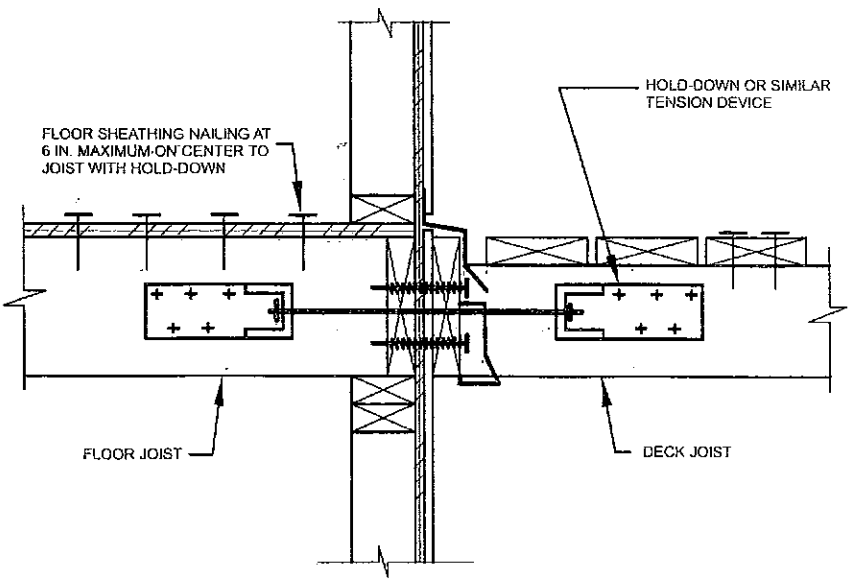

FIGURE 502.2.2.3
DECK ATTACHMENT FOR LATERAL LOADS